EEPROM Serial 32-Kb I²C - Automotive Grade 1

CAV24C32



WLCSP5
C5A SUFFIX
CASE 567JQ



WLCSP4
C4C SUFFIX
CASE 567JY



SOIC−8
W SUFFIX
CASE 751BD

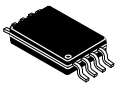

TSSOP−8
Y SUFFIX
CASE 948AL

Description

The CAV24C32 is a EEPROM Serial 32−Kb I²C devices, internally organized as 4096 words of 8 bits each.

It features a 32−byte page write buffer and supports the Standard (100 kHz) and Fast (400 kHz) I²C protocol.

External address pins make it possible to address up to eight CAV24C32 devices on the same bus.

Features

- Automotive AEC−Q100 Grade 1 (−40°C to +125°C) Qualified
- Supports Standard and Fast I²C Protocol
- 2.5 V to 5.5 V Supply Voltage Range
- 32−Byte Page Write Buffer
- Hardware Write Protection for Entire Memory
- CAV Prefix for Automotive and Other Applications Requiring Site and Change Control
- Schmitt Triggers and Noise Suppression Filters on I²C Bus Inputs (SCL and SDA)
- Low Power CMOS Technology
- 1,000,000 Program/Erase Cycles
- 100 Year Data Retention
- SOIC, TSSOP 8−lead, and WLCSP 4−Ball and 5−Ball Packages
- This Device is Pb−Free, Halogen Free/BFR Free, and RoHS Compliant

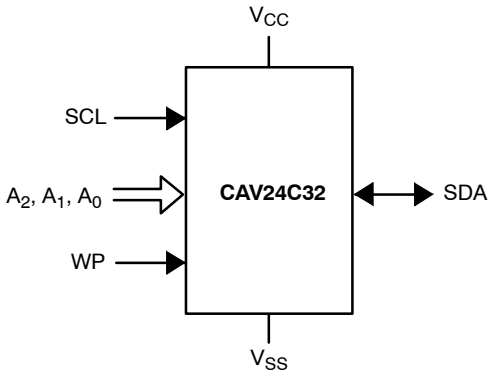

Figure 1. Functional Symbol

PIN CONFIGURATIONS (Top Views)

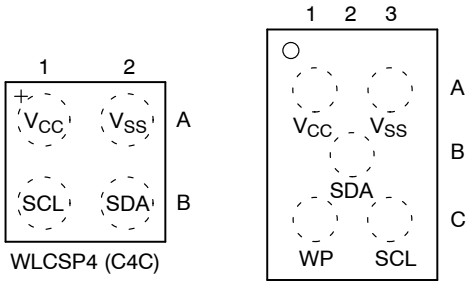

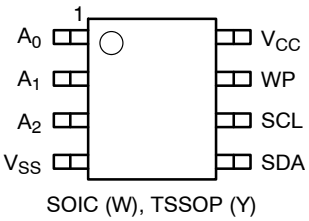

SOIC (W), TSSOP (Y)

For the location of Pin 1, please consult the corresponding package drawing.

PIN FUNCTION

Pin Name	Function
A0, A1, A2	Device Address Input
SDA	Serial Data Input/Output
SCL	Serial Clock Input
WP	Write Protect Input
V_{CC}	Power Supply
V_{SS}	Ground

ORDERING INFORMATION

See detailed ordering and shipping information on page 8 of this data sheet.

This document contains information on some products that are still under development. **onsemi** reserves the right to change or discontinue these products without notice.

© Semiconductor Components Industries, LLC, 2017

DEVICE MARKINGS

(TSSOP−8)

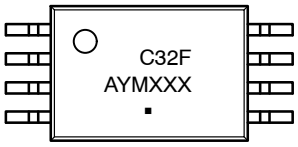

C32F = Specific Device Code
A = Assembly Location
Y = Production Year (Last Digit)
M = Production Month (1−9, O, N, D)
XXX = Last Three Digits of Assembly Lot Number
▪ = Pb−Free Package

(SOIC−8)

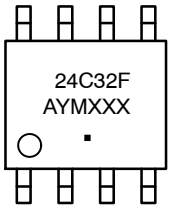

24C32F = Specific Device Code
A = Assembly Location
Y = Production Year (Last Digit)
M = Production Month (1−9, O, N, D)
XXX = Last Three Digits of Assembly Lot Number
▪ = Pb−Free Package

(WLCSP−5)



2 = Specific Device Code
Y = Production Year Code
W = Production Workweek Code

(WLCSP−4)



B = Specific Device Code
Y = Production Year Code
W = Production Workweek Code

Table 1. ABSOLUTE MAXIMUM RATINGS

Parameters	Ratings	Units
Storage Temperature	−65 to +150	°C
Voltage on any Pin with Respect to Ground (Note 1)	−0.5 to +6.5	V

Stresses exceeding those listed in the Maximum Ratings table may damage the device. If any of these limits are exceeded, device functionality should not be assumed, damage may occur and reliability may be affected.

1. During input transitions, voltage undershoot on any pin should not exceed −1 V for more than 20 ns. Voltage overshoot on pins A_0, A_1, A_2 and WP should not exceed V_{CC} + 1 V for more than 20 ns, while voltage on the I^2C bus pins, SCL and SDA, should not exceed the absolute maximum ratings, irrespective of V_{CC}.

Table 2. RELIABILITY CHARACTERISTICS (Note 2)

Symbol	Parameter	Min	Units
N_{END} (Note 3)	Endurance	1,000,000	Program/Erase Cycles
T_{DR}	Data Retention	100	Years

2. These parameters are tested initially and after a design or process change that affects the parameter according to appropriate AEC−Q100 and JEDEC test methods.
3. Page Mode, V_{CC} = 5 V, 25°C.

Table 3. D.C. OPERATING CHARACTERISTICS (V_{CC} = 2.5 V to 5.5 V, T_A = −40°C to +125°C, unless otherwise specified.)

Symbol	Parameter	Test Conditions		Min	Max	Units
I_{CCR}	Read Current	Read, f_{SCL} = 400 kHz			1	mA
I_{CCW}	Write Current	Write, f_{SCL} = 400 kHz			2	mA
I_{SB}	Standby Current	All I/O Pins at GND or V_{CC}	T_A = −40°C to +125°C		5	μA
I_L	I/O Pin Leakage	Pin at GND or V_{CC}			2	μA
V_{IL}	Input Low Voltage			−0.5	0.3 x V_{CC}	V
V_{IH}	Input High Voltage	A_0, A_1, A_2 and WP		0.7 x V_{CC}	V_{CC} + 0.5	V
		SCL and SDA		0.7 x V_{CC}	5.5	
V_{OL}	Output Low Voltage	V_{CC} > 2.5 V, I_{OL} = 3 mA			0.4	V

Product parametric performance is indicated in the Electrical Characteristics for the listed test conditions, unless otherwise noted. Product performance may not be indicated by the Electrical Characteristics if operated under different conditions.

Share Feedback
Your Opinion Matters

Table 4. PIN IMPEDANCE CHARACTERISTICS (V_{CC} = 2.5 V to 5.5 V, T_A = −40°C to +125°C, unless otherwise specified.)

Symbol	Parameter	Conditions	Max	Units
C_{IN} (Note 4)	SDA I/O Pin Capacitance	V_{IN} = 0 V, T_A = 25°C, V_{CC} = 5.0 V	8	pF
C_{IN} (Note 4)	Input Capacitance (other pins)	V_{IN} = 0 V, T_A = 25°C, V_{CC} = 5.0 V	6	pF
I_{WP} (Note 5)	WP Input Current	$V_{IN} < V_{IH}$, V_{CC} = 5.5 V	130	μA
		$V_{IN} < V_{IH}$, V_{CC} = 3.3 V	120	
		$V_{IN} < V_{IH}$, V_{CC} = 2.5 V	80	
		$V_{IN} < V_{IH}$	2	
I_A (Note 5)	Address Input Current (A0, A1, A2) Product Rev F	$V_{IN} < V_{IH}$, V_{CC} = 5.5 V	50	μA
		$V_{IN} < V_{IH}$, V_{CC} = 3.3 V	35	
		$V_{IN} < V_{IH}$, V_{CC} = 2.5 V	25	
		$V_{IN} > V_{IH}$	2	

4. These parameters are tested initially and after a design or process change that affects the parameter according to appropriate AEC−Q100 and JEDEC test methods.
5. When not driven, the WP, A0, A1 and A2 pins are pulled down to GND internally. For improved noise immunity, the internal pull−down is relatively strong; therefore the external driver must be able to supply the pull−down current when attempting to drive the input HIGH. To conserve power, as the input level exceeds the trip point of the CMOS input buffer (~ 0.5 x V_{CC}), the strong pull−down reverts to a weak current source.

Table 5. A.C. CHARACTERISTICS (V_{CC} = 2.5 V to 5.5 V, T_A = −40°C to +125°C, unless otherwise specified.) (Note 6)

Symbol	Parameter	Standard		Fast		Units
		Min	Max	Min	Max	
F_{SCL}	Clock Frequency		100		400	kHz
$t_{HD:STA}$	START Condition Hold Time	4		0.6		μs
t_{LOW}	Low Period of SCL Clock	4.7		1.3		μs
t_{HIGH}	High Period of SCL Clock	4		0.6		μs
$t_{SU:STA}$	START Condition Setup Time	4.7		0.6		μs
$t_{HD:DAT}$	Data In Hold Time	0		0		μs
$t_{SU:DAT}$	Data In Setup Time	250		100		ns
t_R	SDA and SCL Rise Time		1000		300	ns
t_F (Note 6)	SDA and SCL Fall Time		300		300	ns
$t_{SU:STO}$	STOP Condition Setup Time	4		0.6		μs
t_{BUF}	Bus Free Time Between STOP and START	4.7		1.3		μs
t_{AA}	SCL Low to Data Out Valid		3.5		0.9	μs
t_{DH}	Data Out Hold Time	100		100		ns
T_i (Note 6)	Noise Pulse Filtered at SCL and SDA Inputs		100		100	ns
$t_{SU:WP}$	WP Setup Time	0		0		μs
$t_{HD:WP}$	WP Hold Time	2.5		2.5		μs
t_{WR}	Write Cycle Time		5		5	ms
t_{PU} (Notes 7, 8)	Power−up to Ready Mode		1		1	ms

6. Test conditions according to “AC Test Conditions” table.
7. Tested initially and after a design or process change that affects this parameter.
8. t_{PU} is the delay between the time V_{CC} is stable and the device is ready to accept commands.

Table 6. A.C. TEST CONDITIONS

Input Drive Levels	0.2 x V_{CC} to 0.8 x V_{CC}
Input Rise and Fall Time	≤ 50 ns
Input Reference Levels	0.3 x V_{CC}, 0.7 x V_{CC}
Output Reference Level	0.5 x V_{CC}
Output Test Load	Current Source I_{OL} = 3 mA; C_L = 100 pF

Share Feedback
Your Opinion Matters

POWER−ON RESET (POR)

Each CAV24C32 incorporates Power−On Reset (POR) circuitry which protects the internal logic against powering up in the wrong state. The device will power up into Standby mode after V_{CC} exceeds the POR trigger level and will power down into Reset mode when V_{CC} drops below the POR trigger level. This bi−directional POR behavior protects the device against 'brown−out' failure following a temporary loss of power.

PIN DESCRIPTION

SCL: The Serial Clock input pin accepts the clock signal generated by the Master.

SDA: The Serial Data I/O pin accepts input data and delivers output data. In transmit mode, this pin is open drain. Data is acquired on the positive edge, and is delivered on the negative edge of SCL.

A_0, A_1 and A_2: The Address inputs set the device address that must be matched by the corresponding Slave address bits. The Address inputs are hard−wired HIGH or LOW allowing for up to eight devices to be used (cascaded) on the same bus. When left floating, these pins are pulled LOW internally.

WP: When pulled HIGH, the Write Protect input pin inhibits all write operations. When left floating, this pin is pulled LOW internally.

FUNCTIONAL DESCRIPTION

The CAV24C32 supports the Inter−Integrated Circuit (I^2C) Bus protocol. The protocol relies on the use of a Master device, which provides the clock and directs bus traffic, and Slave devices which execute requests. The CAV24C32 operates as a Slave device. Both Master and Slave can transmit or receive, but only the Master can assign those roles.

I^2C Bus Protocol

The 2−wire I^2C bus consists of two lines, SCL and SDA, connected to the V_{CC} supply via pull−up resistors. The Master provides the clock to the SCL line, and either the Master or the Slaves drive the SDA line. A '0' is transmitted by pulling a line LOW and a '1' by letting it stay HIGH. Data transfer may be initiated only when the bus is not busy (see A.C. Characteristics). During data transfer, SDA must remain stable while SCL is HIGH.

START/STOP Condition

An SDA transition while SCL is HIGH creates a START or STOP condition (Figure 2). The START consists of a HIGH to LOW SDA transition, while SCL is HIGH. Absent the START, a Slave will not respond to the Master. The STOP completes all commands, and consists of a LOW to HIGH SDA transition, while SCL is HIGH.

Device Addressing

The Master addresses a Slave by creating a START condition and then broadcasting an 8−bit Slave address. For the CAV24C32, the first four bits of the Slave address are set to 1010 (Ah); the next three bits, A_2, A_1 and A_0, must match the logic state of the similarly named input pins. The R/W bit tells the Slave whether the Master intends to read (1) or write (0) data (Figure 3).

Acknowledge

During the 9th clock cycle following every byte sent to the bus, the transmitter releases the SDA line, allowing the receiver to respond. The receiver then either acknowledges (ACK) by pulling SDA LOW, or does not acknowledge (NoACK) by letting SDA stay HIGH (Figure 4). Bus timing is illustrated in Figure 5.

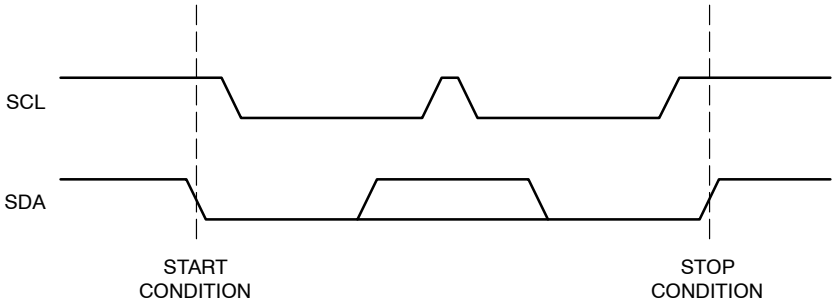

Figure 2. Start/Stop Timing

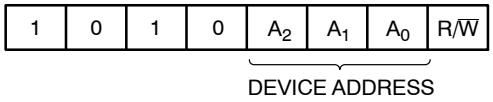

Figure 3. Slave Address Bits

Share Feedback
Your Opinion Matters

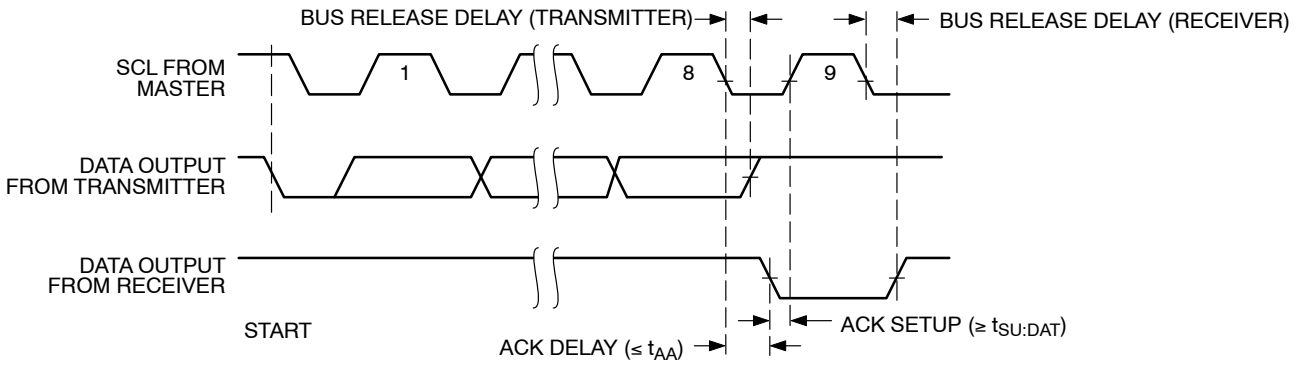

Figure 4. Acknowledge Timing

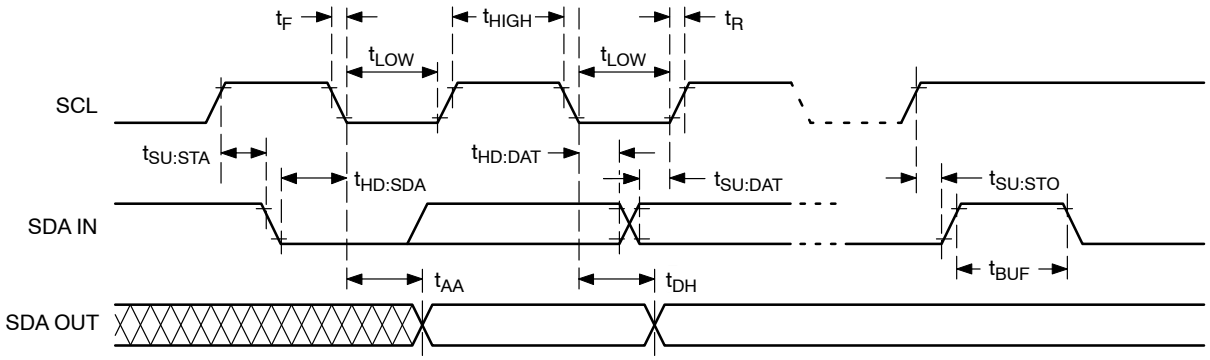

Figure 5. Bus Timing

WRITE OPERATIONS

Byte Write

To write data to memory, the Master creates a START condition on the bus and then broadcasts a Slave address with the R/$\overline{W}$ bit set to '0'. The Master then sends two address bytes and a data byte and concludes the session by creating a STOP condition on the bus. The Slave responds with ACK after every byte sent by the Master (Figure 6). The STOP starts the internal Write cycle, and while this operation is in progress (t_{WR}), the SDA output is tri−stated and the Slave does not acknowledge the Master (Figure 7).

Page Write

The Byte Write operation can be expanded to Page Write, by sending more than one data byte to the Slave before issuing the STOP condition (Figure 8). Up to 32 distinct data bytes can be loaded into the internal Page Write Buffer starting at the address provided by the Master. The page address is latched, and as long as the Master keeps sending data, the internal byte address is incremented up to the end of page, where it then wraps around (within the page). New data can therefore replace data loaded earlier. Following the STOP, data loaded during the Page Write session will be written to memory in a single internal Write cycle (t_{WR}).

Acknowledge Polling

As soon (and as long) as internal Write is in progress, the Slave will not acknowledge the Master. This feature enables the Master to immediately follow−up with a new Read or Write request, rather than wait for the maximum specified Write time (t_{WR}) to elapse. Upon receiving a NoACK response from the Slave, the Master simply repeats the request until the Slave responds with ACK.

Hardware Write Protection

With the WP pin held HIGH, the entire memory is protected against Write operations. If the WP pin is left floating or is grounded, it has no impact on the Write operation. The state of the WP pin is strobed on the last falling edge of SCL immediately preceding the 1st data byte (Figure 9). If the WP pin is HIGH during the strobe interval, the Slave will not acknowledge the data byte and the Write request will be rejected.

Delivery State

The CAV24C32 is shipped erased, i.e., all bytes are FFh.

Share Feedback
Your Opinion Matters

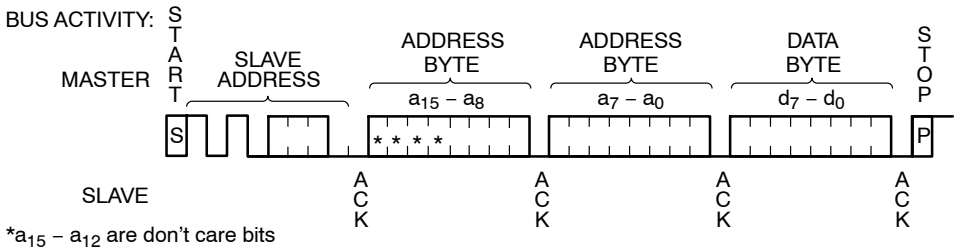

Figure 6. Byte Write Sequence

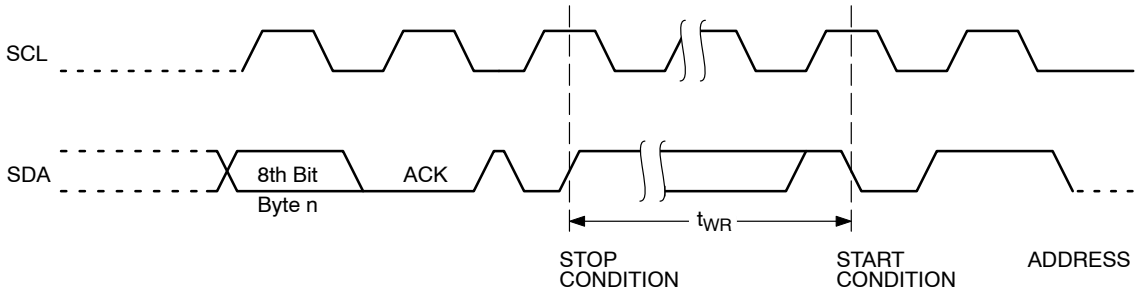

Figure 7. Write Cycle Timing

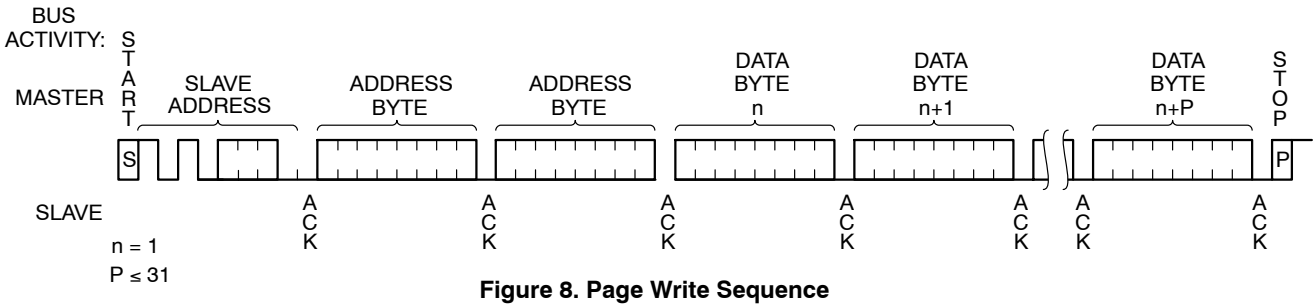

Figure 8. Page Write Sequence

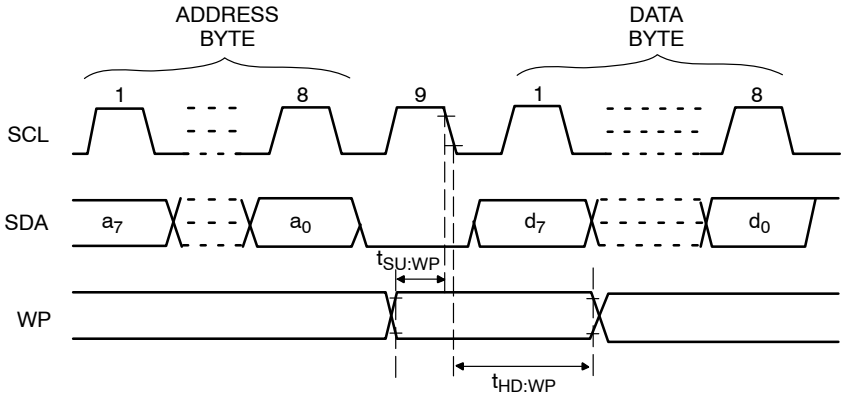

Figure 9. WP Timing

Share Feedback
Your Opinion Matters

READ OPERATIONS

Immediate Read

To read data from memory, the Master creates a START condition on the bus and then broadcasts a Slave address with the R/$\overline{W}$ bit set to '1'. The Slave responds with ACK and starts shifting out data residing at the current address. After receiving the data, the Master responds with NoACK and terminates the session by creating a STOP condition on the bus (Figure 10). The Slave then returns to Standby mode.

Selective Read

To read data residing at a specific address, the selected address must first be loaded into the internal address register. This is done by starting a Byte Write sequence, whereby the Master creates a START condition, then broadcasts a Slave address with the R/$\overline{W}$ bit set to '0' and then sends two address bytes to the Slave. Rather than completing the Byte Write sequence by sending data, the Master then creates a START condition and broadcasts a Slave address with the R/$\overline{W}$ bit set to '1'. The Slave responds with ACK after every byte sent by the Master and then sends out data residing at the selected address. After receiving the data, the Master responds with NoACK and then terminates the session by creating a STOP condition on the bus (Figure 11).

Sequential Read

If, after receiving data sent by the Slave, the Master responds with ACK, then the Slave will continue transmitting until the Master responds with NoACK followed by STOP (Figure 12). During Sequential Read the internal byte address is automatically incremented up to the end of memory, where it then wraps around to the beginning of memory.

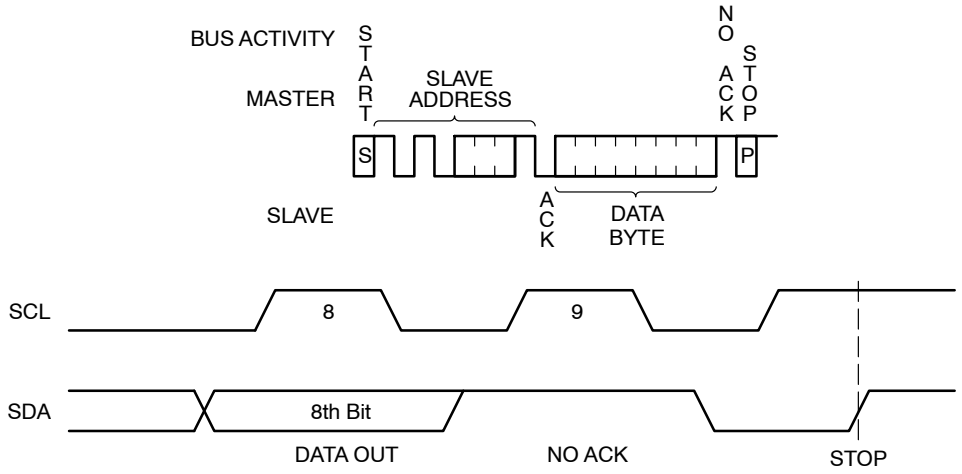

Figure 10. Immediate Read Sequence and Timing

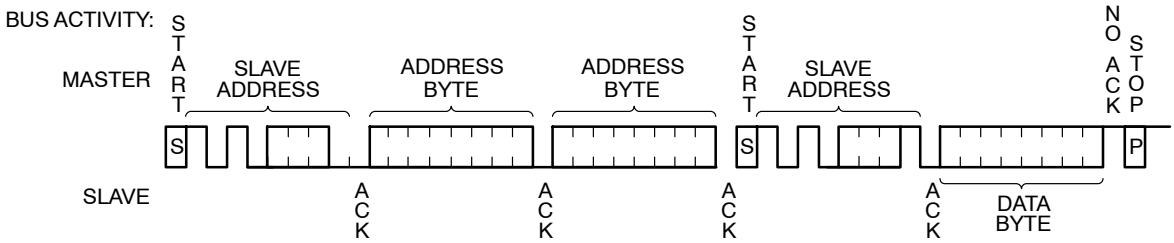

Figure 11. Selective Read Sequence

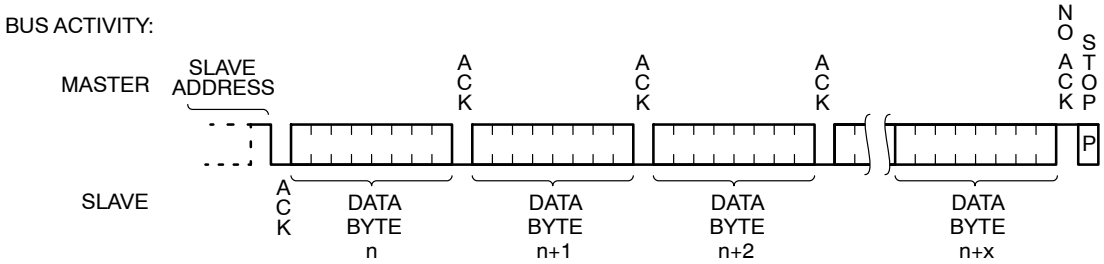

Figure 12. Sequential Read Sequence

Share Feedback
Your Opinion Matters

ORDERING INFORMATION

Device Order Number	Specific Device Marking	Package Type	Lead Finish	Shipping†
CAV24C32C5ATR (Note 10)	2	WLCSP5	SnAgCu	Tape & Reel, 5,000 Units / Reel
CAV24C32C5CTR (Note 10)	P	WLCSP5 with Die Coat	SnAgCu	Tape & Reel, 5,000 Units / Reel
CAV24C32C4CTR (Note 10)	B	WLCSP4 with Die Coat	SnAgCu	Tape & Reel, 5,000 Units / Reel
CAV24C32WE−GT3	24C32F	SOIC−8, JEDEC	NiPdAu	Tape & Reel, 3,000 Units / Reel
CAV24C32YE−G (Note 10)	C32F	TSSOP−8	NiPdAu	Tube, 100 Units / Tube
CAV24C32YE−GT3	C32F	TSSOP−8	NiPdAu	Tape & Reel, 3,000 Units / Reel

†For information on tape and reel specifications, including part orientation and tape sizes, please refer to our Tape and Reel Packaging Specifications Brochure, BRD8011/D.

9. All packages are RoHS−compliant (Lead−free, Halogen−free).
10. Please contact your nearest **onsemi** Sales office for availability.
11. **Caution: The EEPROM devices delivered in WLCSP must never be exposed to ultraviolet light. When exposed to ultraviolet light the EEPROM cells lose their stored data.**

onsemi is licensed by the Philips Corporation to carry the I^2C bus protocol.

Share Feedback
Your Opinion Matters

SCALE 4:1

WLCSP5, 1.34x0.91
CASE 567JQ
ISSUE A

DATE 09 JUN 2015

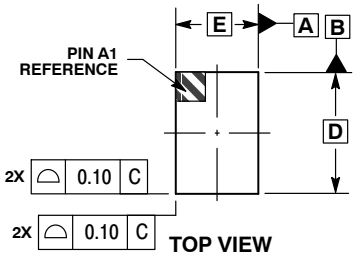

TOP VIEW

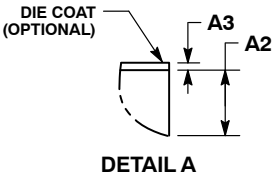

DETAIL A

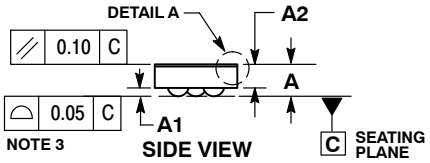

SIDE VIEW

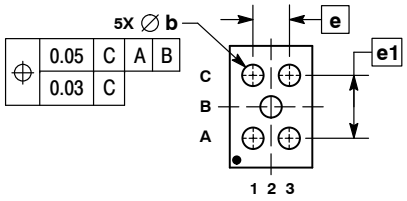

BOTTOM VIEW

NOTES:
1. DIMENSIONING AND TOLERANCING PER ASME Y14.5M, 1994.
2. CONTROLLING DIMENSION: MILLIMETERS.
3. COPLANARITY APPLIES TO THE SPHERICAL CROWNS OF THE SOLDER BALLS.
4. DIMENSION b IS MEASURED AT THE MAXIMUM BALL DIAMETER PARALLEL TO DATUM C.

	MILLIMETERS	
DIM	MIN	MAX
A	---	0.35
A1	0.08	0.12
A2	0.23 REF	
A3	0.025 REF	
b	0.16	0.20
D	1.34 BSC	
E	0.91 BSC	
e	0.40 BSC	
e1	0.693 BSC	

GENERIC MARKING DIAGRAM*



X = Specific Device Code
Y = Year
W = Work Week

*This information is generic. Please refer to device data sheet for actual part marking. Pb−Free indicator, “G” or microdot “ ▪”, may or may not be present.

RECOMMENDED SOLDERING FOOTPRINT*

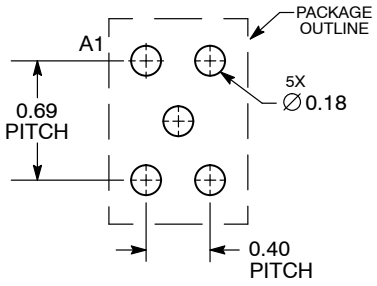

DIMENSIONS: MILLIMETERS

*For additional information on our Pb−Free strategy and soldering details, please download the ON Semiconductor Soldering and Mounting Techniques Reference Manual, SOLDERRM/D.

DOCUMENT NUMBER:	**98AON82067F**	Electronic versions are uncontrolled except when accessed directly from the Document Repository. Printed versions are uncontrolled except when stamped “CONTROLLED COPY” in red.	
DESCRIPTION:	**WLCSP5, 1.34X0.91**		**PAGE 1 OF 1**

onsemi and ONSEMI are trademarks of Semiconductor Components Industries, LLC dba **onsemi** or its subsidiaries in the United States and/or other countries. **onsemi** reserves the right to make changes without further notice to any products herein. **onsemi** makes no warranty, representation or guarantee regarding the suitability of its products for any particular purpose, nor does **onsemi** assume any liability arising out of the application or use of any product or circuit, and specifically disclaims any and all liability, including without limitation special, consequential or incidental damages. **onsemi** does not convey any license under its patent rights nor the rights of others.

© Semiconductor Components Industries, LLC, 2014

WLCSP4, 0.77x0.77
CASE 567JY
ISSUE C

SCALE 4:1

DATE 07 MAR 2017

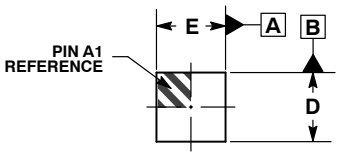

TOP VIEW

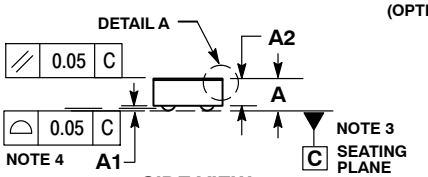

SIDE VIEW

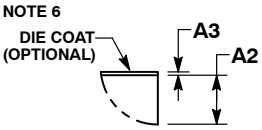

DETAIL A

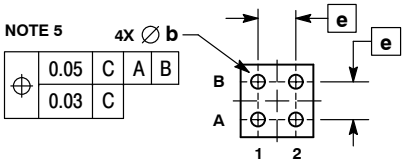

BOTTOM VIEW

NOTES:
1. DIMENSIONING AND TOLERANCING PER ASME Y14.5M, 1994.
2. CONTROLLING DIMENSION: MILLIMETERS.
3. DATUM C, THE SEATING PLANE, IS DEFINED BY THE SPHERICAL CROWNS OF THE SOLDER BALLS.
4. COPLANARITY APPLIES TO SPHERICAL CROWNS OF THE SOLDER BALLS.
5. DIMENSION b IS MEASURED AT THE MAXIMUM CONTACT BALL DIAMETER PARALLEL TO DATUM C.
6. BACKSIDE COATING IS OPTIONAL.

	MILLIMETERS		
DIM	MIN	NOM	MAX
A	---	---	0.35
A1	0.04	0.06	0.08
A2		0.23 REF	
A3		0.025 REF	
b	0.15	0.155	0.16
D	0.75	0.77	0.79
E	0.75	0.77	0.79
e		0.40 BSC	

GENERIC MARKING DIAGRAM*



X = Specific Device Code
Y = Year
W = Work Week

*This information is generic. Please refer to device data sheet for actual part marking. Pb−Free indicator, “G” or microdot “ ▪”, may or may not be present.

RECOMMENDED SOLDERING FOOTPRINT*

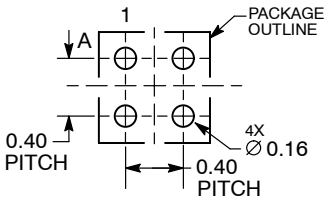

DIMENSIONS: MILLIMETERS

*For additional information on our Pb−Free strategy and soldering details, please download the ON Semiconductor Soldering and Mounting Techniques Reference Manual, SOLDERRM/D.

DOCUMENT NUMBER:	**98AON85186F**	Electronic versions are uncontrolled except when accessed directly from the Document Repository. Printed versions are uncontrolled except when stamped “CONTROLLED COPY” in red.	
DESCRIPTION:	**WLCSP4, 0.77X0.77**		**PAGE 1 OF 1**

onsemi and onsemi are trademarks of Semiconductor Components Industries, LLC dba **onsemi** or its subsidiaries in the United States and/or other countries. **onsemi** reserves the right to make changes without further notice to any products herein. **onsemi** makes no warranty, representation or guarantee regarding the suitability of its products for any particular purpose, nor does **onsemi** assume any liability arising out of the application or use of any product or circuit, and specifically disclaims any and all liability, including without limitation special, consequential or incidental damages. **onsemi** does not convey any license under its patent rights nor the rights of others.

© Semiconductor Components Industries, LLC, 2014

SOIC−8, 150 mils
CASE 751BD
ISSUE O

DATE 19 DEC 2008

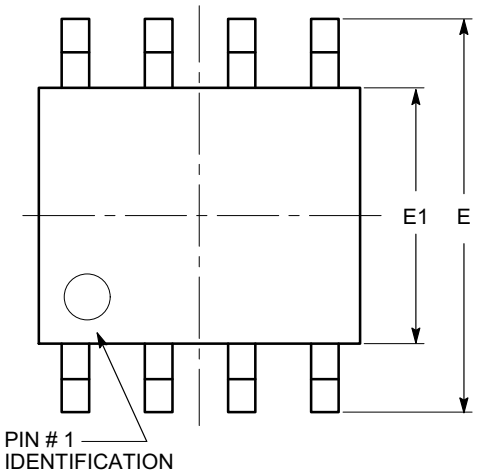

TOP VIEW

SYMBOL	MIN	NOM	MAX
A	1.35		1.75
A1	0.10		0.25
b	0.33		0.51
c	0.19		0.25
D	4.80		5.00
E	5.80		6.20
E1	3.80		4.00
e	1.27 BSC		
h	0.25		0.50
L	0.40		1.27
θ	0º		8º

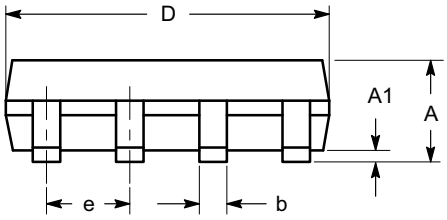

SIDE VIEW

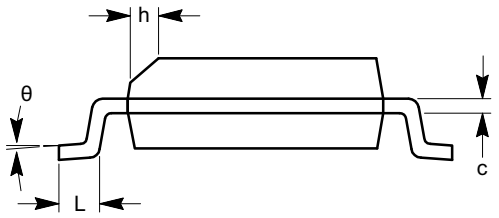

END VIEW

Notes:
(1) All dimensions are in millimeters. Angles in degrees.
(2) Complies with JEDEC MS-012.

DOCUMENT NUMBER:	**98AON34272E**	Electronic versions are uncontrolled except when accessed directly from the Document Repository. Printed versions are uncontrolled except when stamped "CONTROLLED COPY" in red.	
DESCRIPTION:	**SOIC−8, 150 MILS**		**PAGE 1 OF 1**

onsemi and onsemi are trademarks of Semiconductor Components Industries, LLC dba **onsemi** or its subsidiaries in the United States and/or other countries. **onsemi** reserves the right to make changes without further notice to any products herein. **onsemi** makes no warranty, representation or guarantee regarding the suitability of its products for any particular purpose, nor does **onsemi** assume any liability arising out of the application or use of any product or circuit, and specifically disclaims any and all liability, including without limitation special, consequential or incidental damages. **onsemi** does not convey any license under its patent rights nor the rights of others.

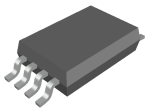

TSSOP8, 4.4x3.0, 0.65P
CASE 948AL
ISSUE A

DATE 20 MAY 2022

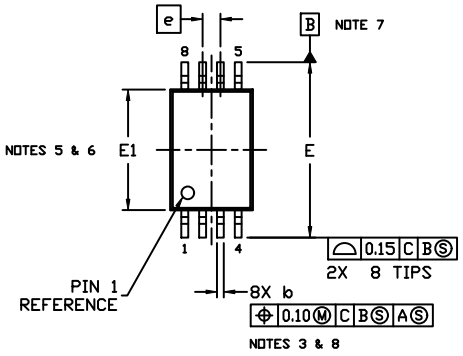

TOP VIEW

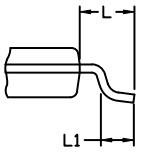

DETAIL A

NOTES:

1. DIMENSIONING AND TOLERANCING PER ASME Y14.5, 2009..
2. CONTROLLING DIMENSION: MILLIMETERS
3. DIMENSION b DOES NOT INCLUDE DAMBAR PROTRUSION. ALLOWABLE PROTRUSION SHALL NOT BE 0.15 IN EXCESS OF MAXIMUM MATERIAL CONDITION.
4. DIMENSION D DOES NOT INCLUDE MOLD FLASH, PROTRUSIONS OR GATE BURRS. MOLD FLASH, PROTRUSIONS OR GATE BURRS SHALL NOT EXCEED 0.15 PER SIDE.
5. DIMENSION E1 DOES NOT INCLUDE INTERLEAD FLASH OR PROTRUSION. INTERLEAD FLASH OR PROTRUSION SHALL NOT EXCEED 0.25 PER SIDE.
6. THE PACKAGE TOP MAY BE SMALLER THAN THE PACKAGE BOTTOM. DIMENSIONS D AND E1 ARE DETERMINED AT THE OUTERMOST EXTREMES OF THE PLASTIC BODY AT DATUM PLANE H.
7. DATUMS A AND B ARE TO BE DETERMINED AT DATUM H.
8. DIMENSIONS b AND c APPLY TO THE FLAT SECTION OF THE LEAD BETWEEN 0.10 AND 0.25 FROM THE LEAD TIP..
9. A1 IS DEFINED AS THE LOWEST VERTICAL DISTANCE FROM THE SEATING PLANE TO THE LOWEST POINT ON THE PACKAGE BODY..

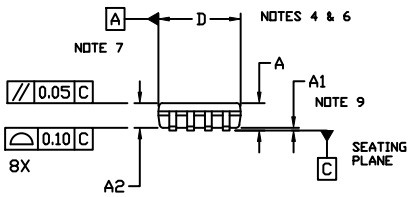

SIDE VIEW

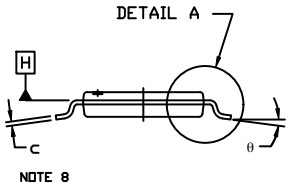

END VIEW

DIM	MILLIMETERS		
	MIN.	NOM.	MAX.
A	---	---	1.20
A1	0.05	---	0.15
A2	0.80	0.90	1.05
b	0.19	---	0.30
c	0.09	---	0.20
D	2.90	3.00	3.10
E	6.30	6.40	6.50
E1	4.30	4.40	4.50
e	0.65 BSC		
L	1.00 REF		
L1	0.50	0.60	0.70
θ	0°	---	8°

GENERIC MARKING DIAGRAM*

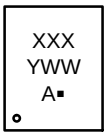

XXX = Specific Device Code
Y = Year
WW = Work Week
A = Assembly Location
▪ = Pb−Free Package

*This information is generic. Please refer to device data sheet for actual part marking. Pb−Free indicator, “G” or microdot “▪”, may or may not be present. Some products may not follow the Generic Marking.

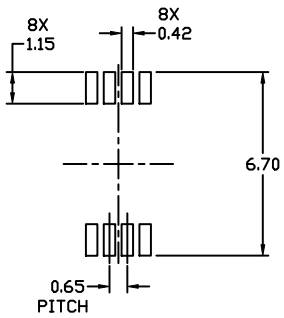

RECOMMENDED
MOUNTING FOOTPRINT*

* For additional information on our Pb-Free strategy and soldering details, please download the ON Semiconductor Soldering and Mounting Techniques Reference Manual, SOLDERRM/D.

DOCUMENT NUMBER:	**98AON34428E**	Electronic versions are uncontrolled except when accessed directly from the Document Repository. Printed versions are uncontrolled except when stamped “CONTROLLED COPY” in red.	
DESCRIPTION:	**TSSOP8, 4.4X3.0, 0.65P**		**PAGE 1 OF 1**

onsemi and ONSEMI are trademarks of Semiconductor Components Industries, LLC dba **onsemi** or its subsidiaries in the United States and/or other countries. **onsemi** reserves the right to make changes without further notice to any products herein. **onsemi** makes no warranty, representation or guarantee regarding the suitability of its products for any particular purpose, nor does **onsemi** assume any liability arising out of the application or use of any product or circuit, and specifically disclaims any and all liability, including without limitation special, consequential or incidental damages. **onsemi** does not convey any license under its patent rights nor the rights of others.

onsemi, , and other names, marks, and brands are registered and/or common law trademarks of Semiconductor Components Industries, LLC dba "**onsemi**" or its affiliates and/or subsidiaries in the United States and/or other countries. **onsemi** owns the rights to a number of patents, trademarks, copyrights, trade secrets, and other intellectual property. A listing of **onsemi**'s product/patent coverage may be accessed at www.onsemi.com/site/pdf/Patent−Marking.pdf. **onsemi** reserves the right to make changes at any time to any products or information herein, without notice. The information herein is provided "as−is" and **onsemi** makes no warranty, representation or guarantee regarding the accuracy of the information, product features, availability, functionality, or suitability of its products for any particular purpose, nor does **onsemi** assume any liability arising out of the application or use of any product or circuit, and specifically disclaims any and all liability, including without limitation special, consequential or incidental damages. Buyer is responsible for its products and applications using **onsemi** products, including compliance with all laws, regulations and safety requirements or standards, regardless of any support or applications information provided by **onsemi**. "Typical" parameters which may be provided in **onsemi** data sheets and/or specifications can and do vary in different applications and actual performance may vary over time. All operating parameters, including "Typicals" must be validated for each customer application by customer's technical experts. **onsemi** does not convey any license under any of its intellectual property rights nor the rights of others. **onsemi** products are not designed, intended, or authorized for use as a critical component in life support systems or any FDA Class 3 medical devices or medical devices with a same or similar classification in a foreign jurisdiction or any devices intended for implantation in the human body. Should Buyer purchase or use **onsemi** products for any such unintended or unauthorized application, Buyer shall indemnify and hold **onsemi** and its officers, employees, subsidiaries, affiliates, and distributors harmless against all claims, costs, damages, and expenses, and reasonable attorney fees arising out of, directly or indirectly, any claim of personal injury or death associated with such unintended or unauthorized use, even if such claim alleges that **onsemi** was negligent regarding the design or manufacture of the part. **onsemi** is an Equal Opportunity/Affirmative Action Employer. This literature is subject to all applicable copyright laws and is not for resale in any manner.

ADDITIONAL INFORMATION

TECHNICAL PUBLICATIONS:
Technical Library: www.onsemi.com/design/resources/technical−documentation
onsemi Website: www.onsemi.com

ONLINE SUPPORT: www.onsemi.com/support
For additional information, please contact your local Sales Representative at www.onsemi.com/support/sales