Low-Voltage Quad 2-Input NAND Gate with 5 V Tolerant Inputs

74LCX00

General Description

The LCX00 contains four 2-input NAND gates. The inputs tolerate voltages up to 5.5 V allowing the interface of 5 V systems to 3 V systems.

The 74LCX00 is fabricated with advanced CMOS technology to achieve high speed operation while maintaining CMOS low power dissipation.

Features

- 5 V Tolerant Inputs
- 1.65 V – 5.5 V V_{CC} Specifications Provided
- 5.2 ns t_{PD} Max. (V_{CC} = 3.3 V), 10 μA I_{CC} Max.
- Power Down High Impedance Inputs and Outputs
- ±24 mA Output Drive (V_{CC} = 3.0 V)
- Implements Proprietary Noise/EMI Reduction Circuitry
- Latch−up Performance Exceeds JEDEC 78 Conditions
- ESD performance:
  - Human Body Model >2000 V
- Available on SOIC, TSSOP and Leadless QFN Packages
- These Devices are Pb−Free, Halide Free and are RoHS Compliant

MARKING DIAGRAMS

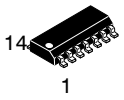

SOIC-14
D SUFFIX
CASE 751A

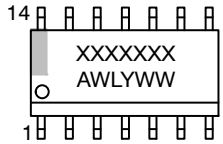

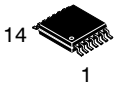

TSSOP-14
DT SUFFIX
CASE 948G

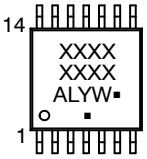

XXXXXX	= Specific Device Code
A	= Assembly Location
L, WL	= Wafer Lot
Y, YY	= Year
W, WW	= Work Week
G or ▪	= Pb−Free Package

(Note: Microdot may be in either location)

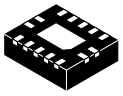

QFN14 3.0x2.5, 0.5P
CASE 510CB



XXXXX	= Specific Device Code
Z	= Assembly Plant Code
XY	= Date Code
KK	= Lot Run Traceability Code

ORDERING INFORMATION

See detailed ordering and shipping information on page 8 of this data sheet.

© Semiconductor Components Industries, LLC, 1995

CONNECTION DIAGRAMS

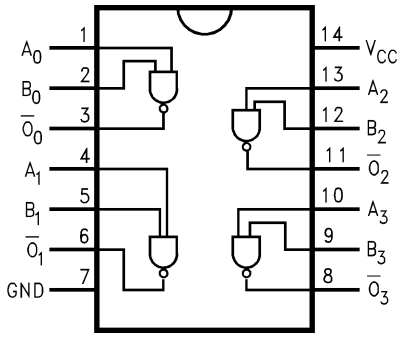

Figure 1. Pin Assignments for SOIC and TSSOP

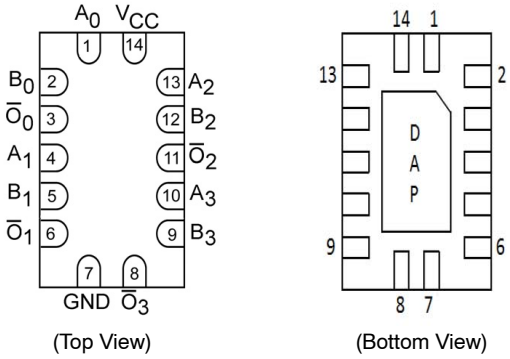

Figure 2. Pad Assignments for DQFN

LOGIC SYMBOL

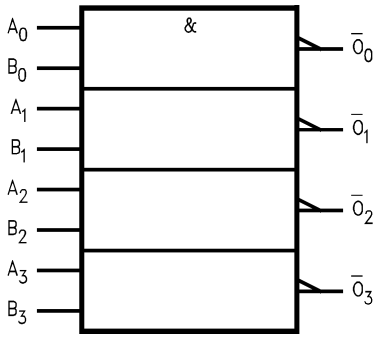

Figure 3. IEEE/IEC

PIN DESCRIPTION

Pin Names	Description
A_n, B_n	Inputs
$\overline{O}_n$	Outputs
DAP	No Connect

NOTE: DAP (Die Attach Pad)

Share Feedback
Your Opinion Matters

ABSOLUTE MAXIMUM RATINGS

Symbol	Parameter		Value	Unit
V_{CC}	DC Supply Voltage		−0.5 to +6.5	V
V_I	DC Input Voltage (Note 1)		−0.5 to +6.5	V
V_O	DC Output Voltage (Note 1)	Active−Mode (High or Low State) Tri−State Mode Power−Down Mode (V_{CC} = 0 V)	−0.5 to V_{CC} + 0.5 −0.5 to +6.5 −0.5 to +6.5	V
I_{IK}	DC Input Diode Current	V_I < GND	−50	mA
I_{OK}	DC Output Diode Current	V_O < GND	−50	mA
I_O	DC Output Source/Sink Current		±50	mA
I_{CC} or I_{GND}	DC Supply Current per Supply Pin or Ground Pin		±100	mA
T_{STG}	Storage Temperature Range		−65 to +150	°C
T_L	Lead Temperature, 1 mm from Case for 10 secs		260	°C
T_J	Junction Temperature Under Bias		+150	°C
θ_{JA}	Thermal Resistance (Note 1)	SOIC−14 QFN14 TSSOP−14	116 130 150	°C/W
P_D	Power Dissipation in Still Air at 125°C	SOIC−14 QFN14 TSSOP−14	1077 962 833	mW
MSL	Moisture Sensitivity		Level 1	−
F_R	Flammability Rating	Oxygen Index: 28 to 34	UL 94 V−0 @ 0.125 in	−
V_{ESD}	ESD Withstand Voltage (Note 3)	Human Body Model Charged Device Model	2000 N/A	V

Stresses exceeding those listed in the Maximum Ratings table may damage the device. If any of these limits are exceeded, device functionality should not be assumed, damage may occur and reliability may be affected.

1. I_O absolute maximum rating must be observed.
2. Measured with minimum pad spacing on an FR4 board, using 76 mm−by−114 mm, 2−ounce copper trace no air flow per JESD51−7.
3. HBM tested to EIA / JESD22−A114−A. CDM tested to JESD22−C101−A. JEDEC recommends that ESD qualification to EIA/JESD22−A115A (Machine Model) be discontinued.

RECOMMENDED OPERATING CONDITIONS

Symbol	Parameter		Min	Typ	Max	Unit
V_{CC}	Supply Voltage	Operating Data Retention Only	1.65 1.5	3.3 3.3	5.5 5.5	V
V_I	Digital Input Voltage		0	−	5.5	V
V_O	Output Voltage	Active Mode (High or Low State) Tri−State Mode Power Down Mode (V_{CC} = 0 V)	0 0 0	− − −	V_{CC} 5.5 5.5	V
T_A	Operating Free−Air Temperature		−40	−	+125	°C
t_r, t_f	Input Rise or Fall Rate	V_{CC} = 1.65 V to 1.95 V V_{CC} = 2.3 V to 2.7 V V_{IN} from 0.8 V to 2.0 V, V_{CC} = 3.0 V V_{CC} = 4.5 V to 5.5 V	0 0 0 0	− − − −	20 20 10 5	nS/V

Functional operation above the stresses listed in the Recommended Operating Ranges is not implied. Extended exposure to stresses beyond the Recommended Operating Ranges limits may affect device reliability.

4. Unused inputs must always be tied to an appropriate logic voltage level (e.g., either GND or V_{CC}). Unused outputs must be left open.

Share Feedback
Your Opinion Matters

DC ELECTRICAL CHARACTERISTICS

Symbol	Parameter	Conditions	V_{CC} (V)	T_A = −40 °C to +85 °C		T_A = −40 °C to +125 °C		Unit
				Min	Max	Min	Max	
V_{IH}	HIGH Level Input Voltage		1.65 – 1.95	0.65 x V_{CC}	–	0.65 x V_{CC}	–	V
			2.3 – 2.7	1.7	–	1.7	–	
			3.0 – 3.6	2.0	–	2.0	–	
			4.5 – 5.5	0.70 x V_{CC}	–	0.70 x V_{CC}	–	
V_{IL}	LOW Level Input Voltage		1.65 – 1.95	–	0.35 x V_{CC}	–	0.35 x V_{CC}	V
			2.3 – 2.7	–	0.7	–	0.7	
			3.0 – 3.6	–	0.8	–	0.8	
			4.5 – 5.5	–	0.30 x V_{CC}	–	0.30 x V_{CC}	
V_{OH}	High−Level Output Voltage	V_I = V_{IH} or V_{IL}						V
		I_{OH} = −100 μA	1.65 – 5.5	V_{CC} – 0.1	–	V_{CC} – 0.1	–	
		I_{OH} = −4 mA	1.65	1.29	–	1.29	–	
		I_{OH} = −8 mA	2.3	1.8	–	1.8	–	
		I_{OH} = −12 mA	2.7	2.2	–	2.2	–	
		I_{OH} = −16 mA	3.0	2.4	–	2.4	–	
		I_{OH} = −24 mA	3.0	2.2	–	2.2	–	
		I_{OH} = −32 mA	4.5	3.7		3.7	–	
V_{OL}	Low−Level Output Voltage	V_I = V_{IH} or V_{IL}						V
		I_{OL} = 100 μA	1.65 – 5.5	–	0.1	–	0.1	
		I_{OL} = 4 mA	1.65	–	0.24	–	0.24	
		I_{OL} = 8 mA	2.3	–	0.3	–	0.3	
		I_{OL} = 12 mA	2.7	–	0.4	–	0.4	
		I_{OL} = 16 mA	3.0	–	0.4	–	0.4	
		I_{OL} = 24 mA	3.0	–	0.55	–	0.55	
		I_{OL} = 32 mA	4.5	–	0.6	–	0.6	
I_I	Input Leakage Current	V_I = 0 to 5.5 V	3.6	–	±5.0	–	±5.0	μA
I_{OFF}	Power Off Leakage Current	V_I = 5.5 V or V_O = 5.5 V	0	–	10	–	10	μA
I_{CC}	Quiescent Supply Current	V_I = 5.5 V or GND	3.6	–	10	–	10	μA
ΔI_{CC}	Increase in I_{CC} per Input	V_{IH} = V_{CC} – 0.6 V	2.3 – 3.6	–	500	–	500	μA

Product parametric performance is indicated in the Electrical Characteristics for the listed test conditions, unless otherwise noted. Product performance may not be indicated by the Electrical Characteristics if operated under different conditions.

Share Feedback
Your Opinion Matters

AC ELECTRICAL CHARACTERISTICS

Symbol	Parameter	Test Condition	V_{CC} (V)	T_A = −40 °C to +85 °C		T_A = −40 °C to +125 °C		Unit
				Min	Max	Min	Max	
t_{PLH}, t_{PHL}	Propagation Delay, Input to Output	See Figures 4 and 5	1.65 –1.95	–	10	–	10	ns
			2.3 – 2.7	–	6.2	–	6.6	
			2.7	–	6.0	–	6.2	
			3.0 – 3.6	–	5.2	–	5.5	
			4.5 – 5.5	–	4.2	–	5.6	
t_{OSHL}, t_{OSLH}	Output to Output Skew		1.65 – 1.95	–	–	–	–	ns
			2.3 – 2.7	–	–	–	–	
			2.7	–	–	–	–	
			3.0 – 3.6	–	1.0	–	1.0	
			4.5 – 5.5	–	–	–	–	

Product parametric performance is indicated in the Electrical Characteristics for the listed test conditions, unless otherwise noted. Product performance may not be indicated by the Electrical Characteristics if operated under different conditions.

DYNAMIC SWITCHING CHARACTERISTICS

Symbol	Parameter	V_{CC} (V)	Conditions	T_A = 25 °C	Unit
				Typical	
V_{OLP}	Quiet Output Dynamic Peak V_{OL}	3.3	C_L = 50 pF, V_{IH} = 3.3 V, V_{IL} = 0 V	0.8	V
		2.5	C_L = 30 pF, V_{IH} = 2.5 V, V_{IL} = 0 V	0.6	
V_{OLV}	Quiet Output Dynamic Valley V_{OL}	3.3	C_L = 50 pF, V_{IH} = 3.3 V, V_{IL} = 0 V	–0.8	V
		2.5	C_L = 30 pF, V_{IH} = 2.5 V, V_{IL} = 0 V	–0.6	

CAPACITANCE

Symbol	Parameter	Conditions	Typical	Unit
C_{IN}	Input Capacitance	V_{CC} = Open, V_I = 0 V or V_{CC}	7	pF
C_{OUT}	Output Capacitance	V_{CC} = 3.3 V, V_I = 0 V or V_{CC}	8	pF
C_{PD}	Power Dissipation Capacitance	V_{CC} = 3.3 V, V_I = 0 V or V_{CC}, f = 10 MHz	25	pF

Share Feedback
Your Opinion Matters

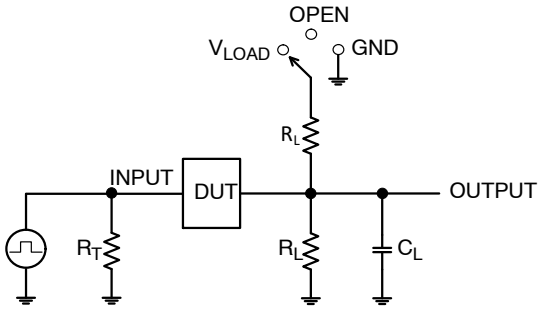

Test	Switch Position
t_{PLH} / t_{PHL}	Open
t_{PLZ} / t_{PZL}	V_{LOAD}
t_{PHZ} / t_{PZH}	GND

C_L includes probe and jig capacitance
R_T is Z_{OUT} of pulse generator (typically 50 Ω)
f = 1 Mhz, t_W = 500 ns

Figure 4. Test Circuit

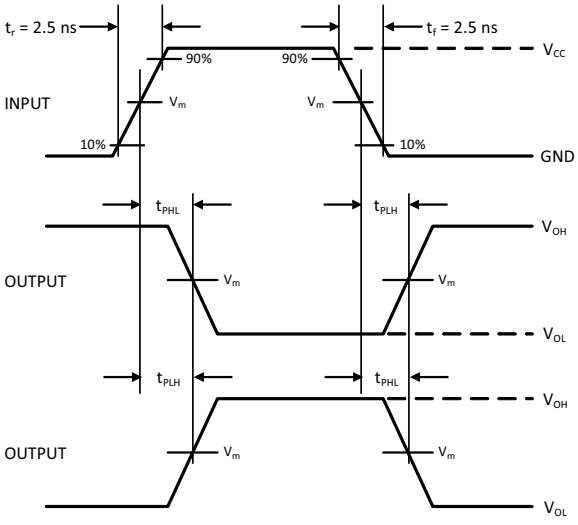

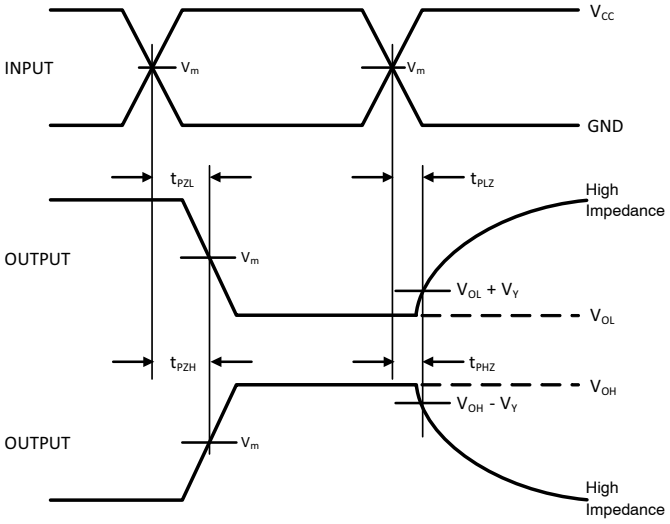

V_{CC}, V	R_L, Ω	C_L, pF	V_{LOAD}	V_m, V	V_Y, V
1.65 to 1.95	500	30	2 x V_{CC}	V_{CC}/2	0.15
2.3 to 2.7	500	30	2 x V_{CC}	V_{CC}/2	0.15
2.7	500	50	6 V	1.5	0.3
3.0 to 3.6	500	50	6 V	1.5	0.3
4.5 to 5.5	500	50	2 x V_{CC}	V_{CC}/2	0.3

Figure 5. Switching Waveforms

Share Feedback
Your Opinion Matters

SCHEMATIC DIAGRAM (Generic for LCX Family)

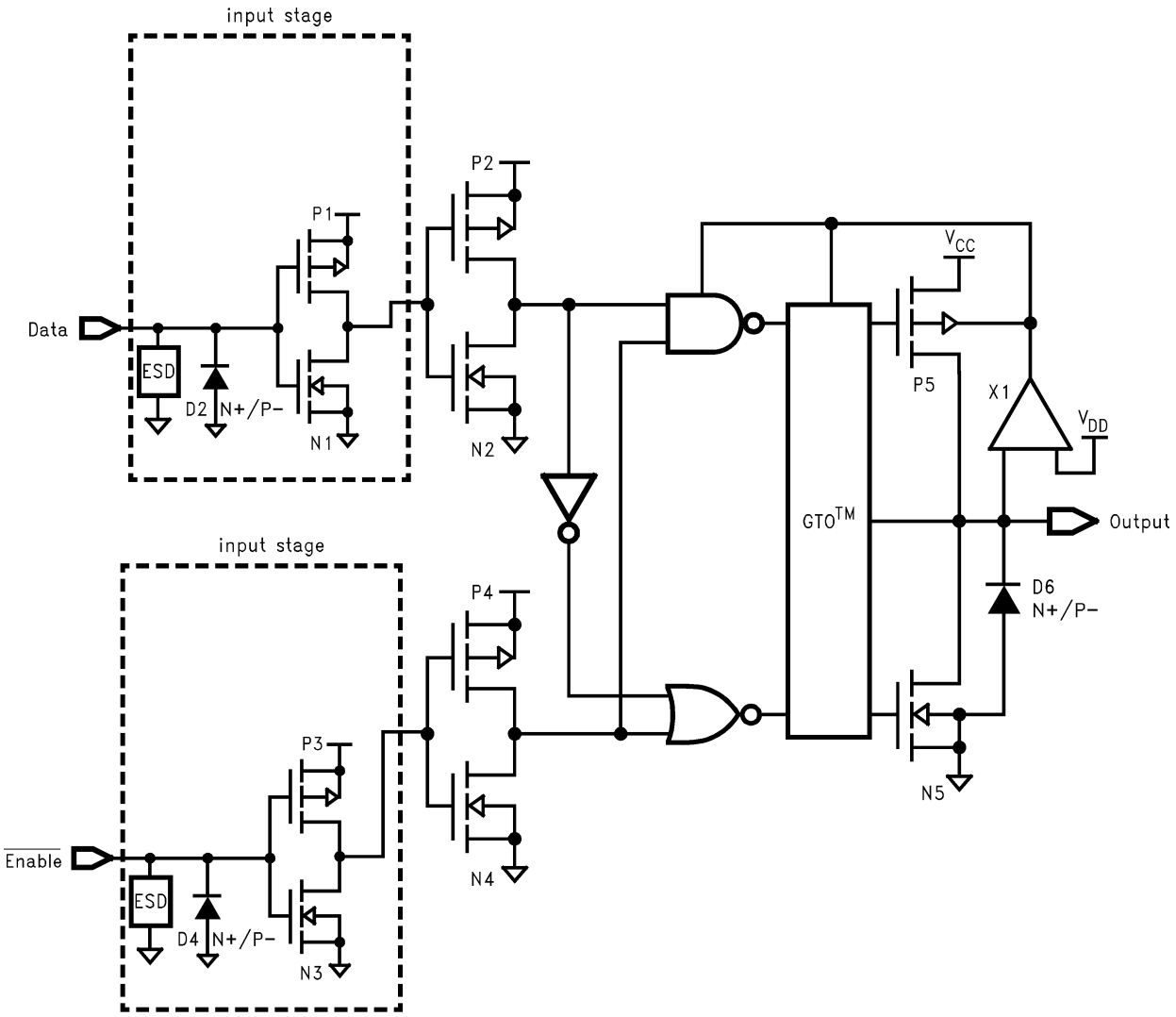

Figure 6. Schematic Diagram (Generic for LCX Family)

Share Feedback
Your Opinion Matters

ORDERING INFORMATION

Device	Marking	Package	Shipping†
74LCX00MTCX	LCX 00	TSSOP-14	2500 / Tape & Reel
74LCX00BQX	LCX00	QFN-14	3000 / Tape & Reel

† For information on tape and reel specifications, including part orientation and tape sizes, please refer to our Tape and Reel Packaging Specifications Brochure, BRD8011/D.

Share Feedback
Your Opinion Matters

QFN14 3.0x2.5, 0.5P
CASE 510CB
ISSUE O

DATE 31 AUG 2016

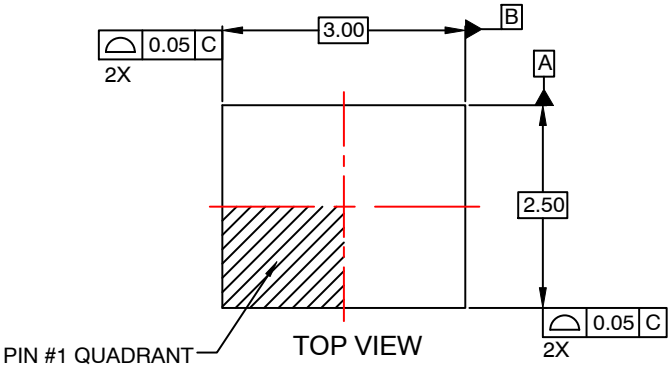

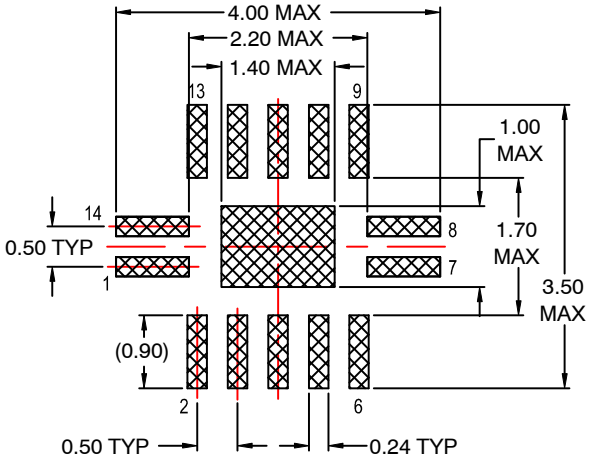

RECOMMENDED LAND PATTERN

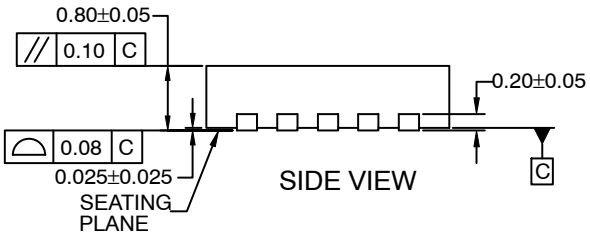

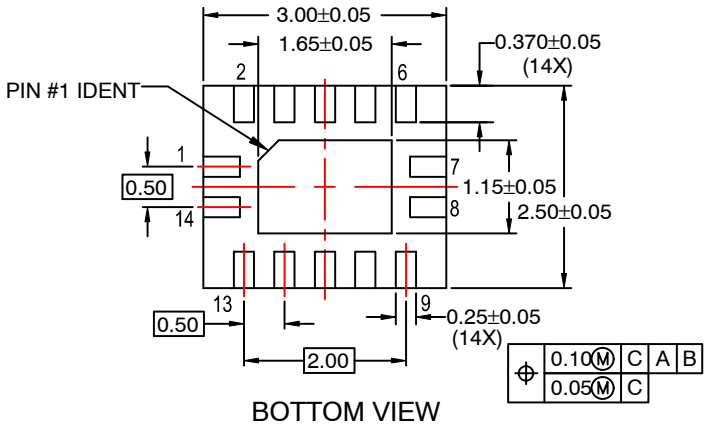

NOTES:

A. CONFORMS TO JEDEC REGISTRATION MO−241, VARIATION AA

B. DIMENSIONS ARE IN MILLIMETERS.

C. DIMENSIONS AND TOLERANCES PER ASME Y14.5M, 2009.

D. LAND PATTERN RECOMMENDATION IS EXISTING INDUSTRY LAND PATTERN.

DOCUMENT NUMBER:	**98AON13643G**	Electronic versions are uncontrolled except when accessed directly from the Document Repository. Printed versions are uncontrolled except when stamped "CONTROLLED COPY" in red.
DESCRIPTION:	**QFN14 3.0X2.5, 0.5P**	**PAGE 1 OF 1**

onsemi and onsemi are trademarks of Semiconductor Components Industries, LLC dba **onsemi** or its subsidiaries in the United States and/or other countries. **onsemi** reserves the right to make changes without further notice to any products herein. **onsemi** makes no warranty, representation or guarantee regarding the suitability of its products for any particular purpose, nor does **onsemi** assume any liability arising out of the application or use of any product or circuit, and specifically disclaims any and all liability, including without limitation special, consequential or incidental damages. **onsemi** does not convey any license under its patent rights nor the rights of others.

SOIC14
CASE 751EF
ISSUE O

DATE 30 SEP 2016

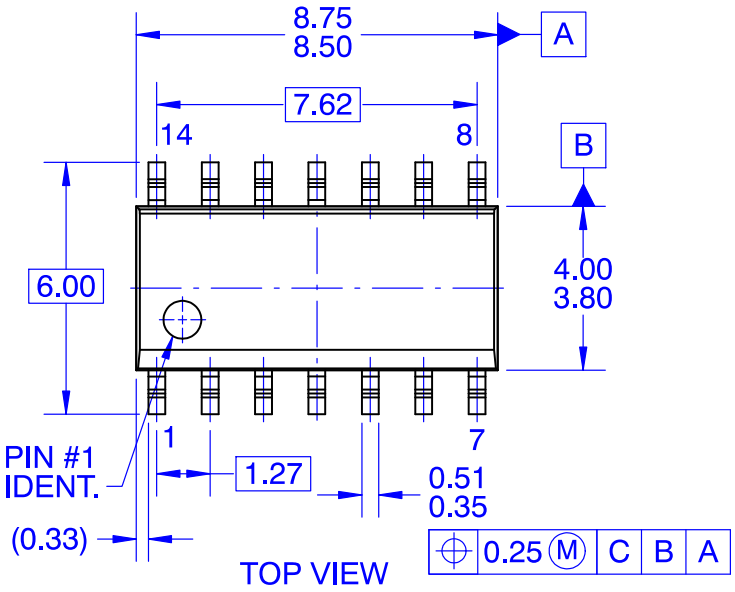

TOP VIEW

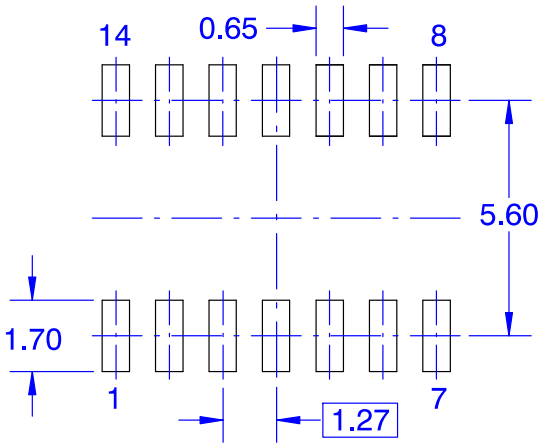

LAND PATTERN RECOMMENDATION

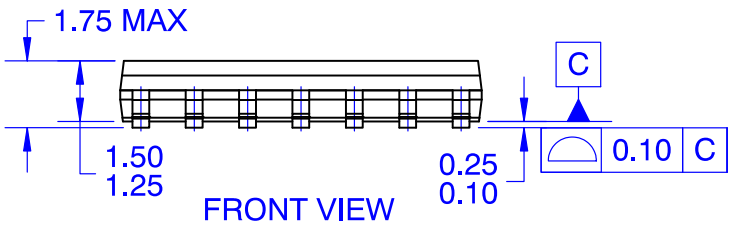

FRONT VIEW

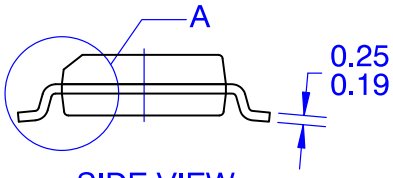

SIDE VIEW

NOTES:
A. CONFORMS TO JEDEC MS−012, VARIATION AB, ISSUE C
B. ALL DIMENSIONS ARE IN MILLIMETERS
C. DIMENSIONS DO NOT INCLUDE MOLD FLASH OR BURRS
D. LAND PATTERN STANDARD: SOIC127P600X145−14M
E. CONFORMS TO ASME Y14.5M, 2009

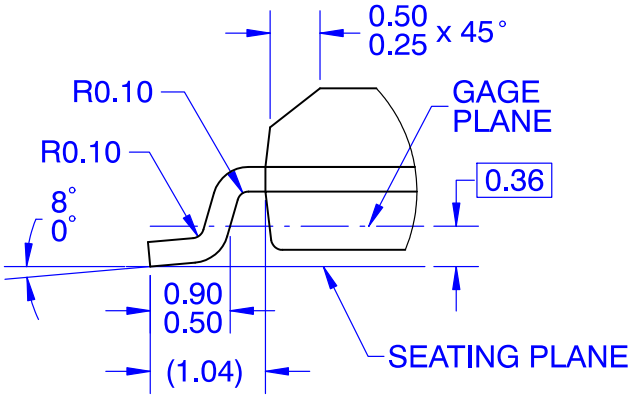

DETAIL A
SCALE 16 : 1

DOCUMENT NUMBER:	**98AON13739G**	Electronic versions are uncontrolled except when accessed directly from the Document Repository. Printed versions are uncontrolled except when stamped "CONTROLLED COPY" in red.
DESCRIPTION:	**SOIC14**	**PAGE 1 OF 1**

onsemi and onsemi are trademarks of Semiconductor Components Industries, LLC dba **onsemi** or its subsidiaries in the United States and/or other countries. **onsemi** reserves the right to make changes without further notice to any products herein. **onsemi** makes no warranty, representation or guarantee regarding the suitability of its products for any particular purpose, nor does **onsemi** assume any liability arising out of the application or use of any product or circuit, and specifically disclaims any and all liability, including without limitation special, consequential or incidental damages. **onsemi** does not convey any license under its patent rights nor the rights of others.

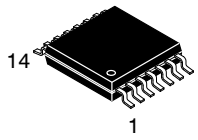

SCALE 2:1

TSSOP−14 WB
CASE 948G
ISSUE C

DATE 17 FEB 2016

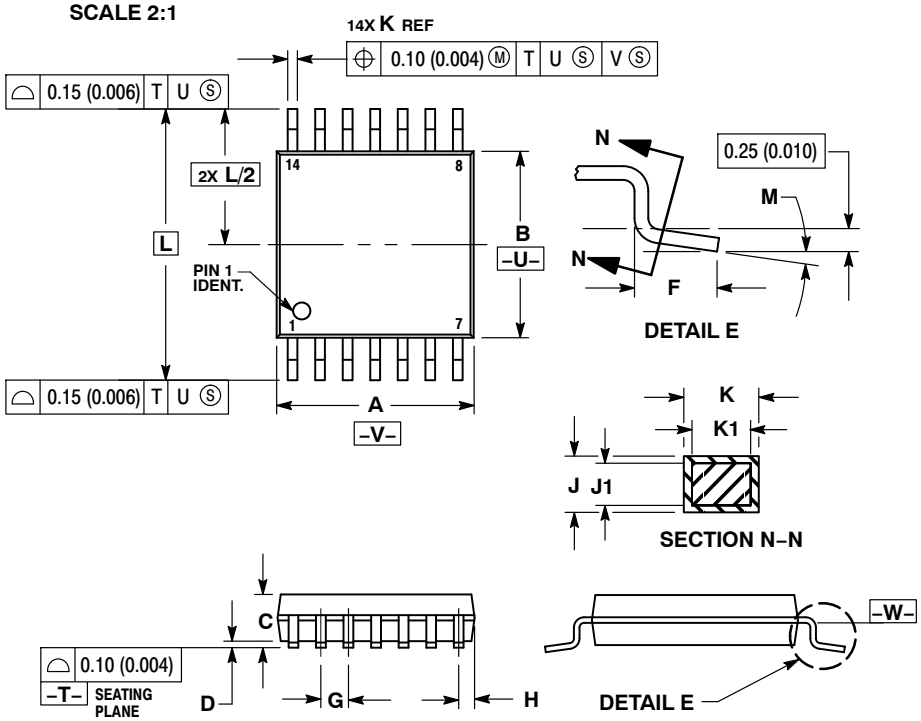

NOTES:
1. DIMENSIONING AND TOLERANCING PER ANSI Y14.5M, 1982.
2. CONTROLLING DIMENSION: MILLIMETER.
3. DIMENSION A DOES NOT INCLUDE MOLD FLASH, PROTRUSIONS OR GATE BURRS. MOLD FLASH OR GATE BURRS SHALL NOT EXCEED 0.15 (0.006) PER SIDE.
4. DIMENSION B DOES NOT INCLUDE INTERLEAD FLASH OR PROTRUSION. INTERLEAD FLASH OR PROTRUSION SHALL NOT EXCEED 0.25 (0.010) PER SIDE.
5. DIMENSION K DOES NOT INCLUDE DAMBAR PROTRUSION. ALLOWABLE DAMBAR PROTRUSION SHALL BE 0.08 (0.003) TOTAL IN EXCESS OF THE K DIMENSION AT MAXIMUM MATERIAL CONDITION.
6. TERMINAL NUMBERS ARE SHOWN FOR REFERENCE ONLY.
7. DIMENSION A AND B ARE TO BE DETERMINED AT DATUM PLANE −W−.

	MILLIMETERS		INCHES	
DIM	MIN	MAX	MIN	MAX
A	4.90	5.10	0.193	0.200
B	4.30	4.50	0.169	0.177
C	−−−	1.20	−−−	0.047
D	0.05	0.15	0.002	0.006
F	0.50	0.75	0.020	0.030
G	0.65 BSC		0.026 BSC	
H	0.50	0.60	0.020	0.024
J	0.09	0.20	0.004	0.008
J1	0.09	0.16	0.004	0.006
K	0.19	0.30	0.007	0.012
K1	0.19	0.25	0.007	0.010
L	6.40 BSC		0.252 BSC	
M	0 °	8 °	0 °	8 °

RECOMMENDED SOLDERING FOOTPRINT*

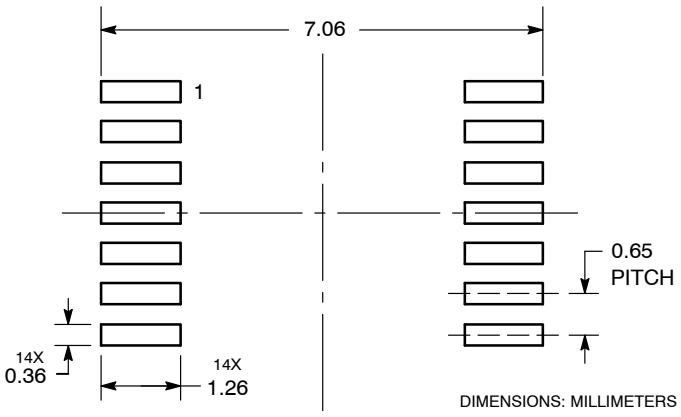

*For additional information on our Pb−Free strategy and soldering details, please download the **onsemi** Soldering and Mounting Techniques Reference Manual, SOLDERRM/D.

GENERIC MARKING DIAGRAM*

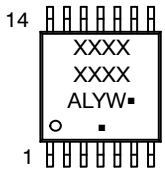

A	= Assembly Location
L	= Wafer Lot
Y	= Year
W	= Work Week
▪	= Pb−Free Package

(Note: Microdot may be in either location)

*This information is generic. Please refer to device data sheet for actual part marking. Pb−Free indicator, “G” or microdot “▪”, may or may not be present. Some products may not follow the Generic Marking.

DOCUMENT NUMBER:	**98ASH70246A**	Electronic versions are uncontrolled except when accessed directly from the Document Repository. Printed versions are uncontrolled except when stamped “CONTROLLED COPY” in red.
DESCRIPTION:	**TSSOP−14 WB**	**PAGE 1 OF 1**

onsemi and onsemi are trademarks of Semiconductor Components Industries, LLC dba **onsemi** or its subsidiaries in the United States and/or other countries. **onsemi** reserves the right to make changes without further notice to any products herein. **onsemi** makes no warranty, representation or guarantee regarding the suitability of its products for any particular purpose, nor does **onsemi** assume any liability arising out of the application or use of any product or circuit, and specifically disclaims any and all liability, including without limitation special, consequential or incidental damages. **onsemi** does not convey any license under its patent rights nor the rights of others.

onsemi, , and other names, marks, and brands are registered and/or common law trademarks of Semiconductor Components Industries, LLC dba "**onsemi**" or its affiliates and/or subsidiaries in the United States and/or other countries. **onsemi** owns the rights to a number of patents, trademarks, copyrights, trade secrets, and other intellectual property. A listing of **onsemi**'s product/patent coverage may be accessed at www.onsemi.com/site/pdf/Patent−Marking.pdf. **onsemi** reserves the right to make changes at any time to any products or information herein, without notice. The information herein is provided "as−is" and **onsemi** makes no warranty, representation or guarantee regarding the accuracy of the information, product features, availability, functionality, or suitability of its products for any particular purpose, nor does **onsemi** assume any liability arising out of the application or use of any product or circuit, and specifically disclaims any and all liability, including without limitation special, consequential or incidental damages. Buyer is responsible for its products and applications using **onsemi** products, including compliance with all laws, regulations and safety requirements or standards, regardless of any support or applications information provided by **onsemi**. "Typical" parameters which may be provided in **onsemi** data sheets and/or specifications can and do vary in different applications and actual performance may vary over time. All operating parameters, including "Typicals" must be validated for each customer application by customer's technical experts. **onsemi** does not convey any license under any of its intellectual property rights nor the rights of others. **onsemi** products are not designed, intended, or authorized for use as a critical component in life support systems or any FDA Class 3 medical devices or medical devices with a same or similar classification in a foreign jurisdiction or any devices intended for implantation in the human body. Should Buyer purchase or use **onsemi** products for any such unintended or unauthorized application, Buyer shall indemnify and hold **onsemi** and its officers, employees, subsidiaries, affiliates, and distributors harmless against all claims, costs, damages, and expenses, and reasonable attorney fees arising out of, directly or indirectly, any claim of personal injury or death associated with such unintended or unauthorized use, even if such claim alleges that **onsemi** was negligent regarding the design or manufacture of the part. **onsemi** is an Equal Opportunity/Affirmative Action Employer. This literature is subject to all applicable copyright laws and is not for resale in any manner.

ADDITIONAL INFORMATION

TECHNICAL PUBLICATIONS:
Technical Library: www.onsemi.com/design/resources/technical−documentation
onsemi Website: www.onsemi.com

ONLINE SUPPORT: www.onsemi.com/support
For additional information, please contact your local Sales Representative at www.onsemi.com/support/sales