MOSFET – Power, N-Channel, Ultrafet

100 V, 56 A, 25 mΩ

HUF75639G3, HUF75639P3, HUF75639S3S, HUF75639S3

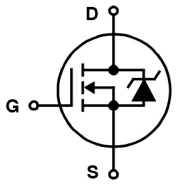

These N−Channel power MOSFETs are manufactured using the innovative Ultrafet process. This advanced process technology achieves the lowest possible on− resistance per silicon area, resulting in outstanding performance. This device is capable of withstanding high energy in the avalanche mode and the diode exhibits very low reverse recovery time and stored charge. It was designed for use in applications where power efficiency is important, such as switching regulators, switching converters, motor drivers, relay drivers, low−voltage bus switches, and power management in portable and battery− operated products.

Formerly developmental type TA75639.

Features

- 56 A, 100 V
- Simulation Models
  - Temperature Compensated PSPICE® and SABER™ Electrical Models
  - Spice and Saber Thermal Impedance Models
  - www.onsemi.com
- Peak Current vs Pulse Width Curve
- UIS Rating Curve
- Related Literature
  - TB334, “Guidelines for Soldering Surface Mount Components to PC Boards”
- These Devices are Pb−Free, Halogen Free/BFR Free and are RoHS Compliant

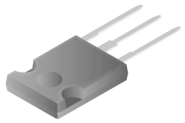

TO−247−3LD
CASE 340CK

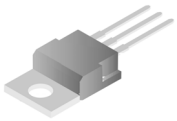

TO−220−3LD
CASE 340AT

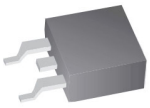

D2PAK−3
CASE 418AJ

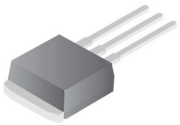

I2PAK
CASE 418AV

MARKING DIAGRAMS

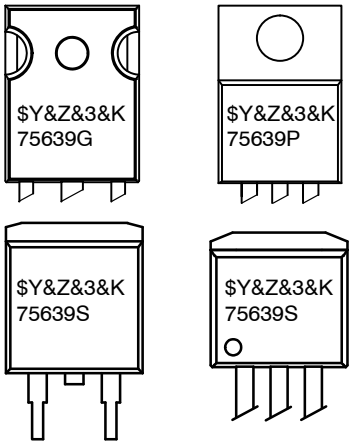

&Y	= **onsemi** Logo
&Z	= Assembly Plant Code
&3	= 3−Digit Date Code
&K	= 2−Digit Lot Traceability Code
75639x	= Specific Device Code
x	= G/P/S

ORDERING INFORMATION

See detailed ordering and shipping information on page 2 of this data sheet.

© Semiconductor Components Industries, LLC, 2001

ORDERING INFORMATION

PART NUMBER	PACKAGE	BRAND
HUF75639G3	TO−247	75639G
HUF75639P3	TO−220AB	75639P
HUF75639S3ST	TO−263AB	75639S
HUF75639S3	TO−262AA	75639S

PACKAGING

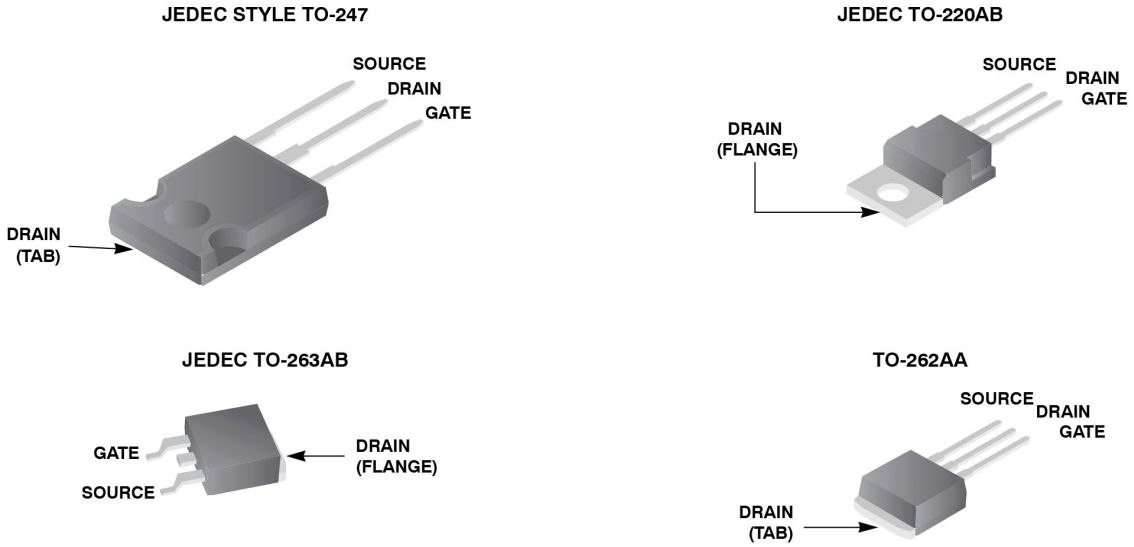

Figure 1.

ABSOLUTE MAXIMUM RATINGS T_C = 25°C unless otherwise specified

Description	Symbol	Ratings	Units
Drain to Source Voltage (Note 1)	V_{DSS}	100 V	V
Drain to Gate Voltage (R_{GS} = 20 kΩ) (Note 1)	V_{DGR}	100 V	V
Gate to Source Voltage	V_{GS}	±20 V	V
Drain Current Continuous (Figure 2) Pulsed Drain Current	 I_D I_{DM}	 56 Figure 4	 A
Pulsed Avalanche Rating	E_{AS}	Figures 6, 14, 15	
Power Dissipation Derate Above 25°C	P_D	200 1.35	W W/°C
Operating and Storage Temperature	T_J, T_{STG}	−55 to 175°C	°C
Maximum Temperature for Soldering Leads at 0.063in (1.6 mm) from Case for 10s Package Body for 10 s, See Techbrief 334	 T_L T_{pkg}	 300 260	 °C

Stresses exceeding those listed in the Maximum Ratings table may damage the device. If any of these limits are exceeded, device functionality should not be assumed, damage may occur and reliability may be affected.

1. T_J = 25°C to 150°C.

ELECTRICAL SPECIFICATION T_J = 25 °C unless otherwise specified

SYMBOL	PARAMETER	TEST CONDITIONS	MIN	TYP	MAX	UNITS
OFF STATE SPECIFICATIONS						
BV_{DSS}	Drain to Source Breakdown Voltage	I_D = 250 μA, V_{GS} = 0 V (Figure 11)	100	–	–	V
I_{DSS}	Zero Gate Voltage Drain Current	V_{DS} = 95 V, V_{GS} = 0 V	–	–	1	μA
		V_{DS} = 90 V, V_{GS} = 0 V, T_C = 150°C	–	–	250	μA
I_{GSS}	Gate to Source Leakage Current	V_{GS} = ±20 V	–	–	±100	nA
ON STATE SPECIFICATIONS						
$V_{GS(TH)}$	Gate to Source Threshold Voltage	V_{GS} = V_{DS}, I_D = 250 μA (Figure 10)	2	–	4	V
$R_{DS(on)}$	Drain to Source On Resistance	I_D = 56 A, V_{GS} = 10 V (Figure 9)	–	21	25	mΩ
THERMAL SPECIFICATIONS						
$R_{\theta JC}$	Thermal Resistance Junction to Case	(Figure 3)	–	–	0.74	°C/W
$R_{\theta JA}$	Thermal Resistance Junction to Ambient	TO−247	–	–	30	°C/W
		TO−220, TO−263, TO−262	–	–	62	°C/W
SWITCHING SPECIFICATIONS (V_{GS} = 10 V)						
t_{ON}	Turn−On Time	V_{DD} = 50 V, $I_D \cong$ 56 A, R_L = 0.89 Ω, V_{GS} = 10 V, R_{GS} = 5.1 Ω	–	–	110	ns
$t_{d(ON)}$	Turn−On Delay Time		–	15	–	ns
t_r	Rise Time		–	60	–	ns
$td_{(OFF)}$	Turn−Off Delay Time		–	20	–	ns
t_f	Fall Time		–	25	–	ns
t_{OFF}	Turn−Off Time		–	–	70	ns
GATE CHARGE SPECIFICATIONS						
$Q_{g(TOT)}$	Total Gate Charge	V_{GS} = 0 V to 20 V; V_{DD} = 50 V, $I_D \cong$ 56 A, R_L = 0.89 Ω, $I_{g(REF)}$ = 1.0 mA (Figure 13)	–	110	130	nC
$Q_{g(10)}$	Gate Charge at 10 V	V_{GS} = 0 V to 10 V	–	57	75	nC
$Q_{g(TH)}$	Threshold Gate Charge	V_{GS} = 0 V to 2 V	–	3.7	4.5	nC
Q_{gs}	Gate to Source Gate Charge		–	9.8	–	nC
Q_{gd}	Gate to Drain “Miller” Charge		–	24	–	nC
CAPACITANCE SPECIFICATIONS						
C_{ISS}	Input Capacitance	V_{DS} = 25 V, V_{GS} = 0 V, f = 1 MHz (Figure 12)	–	2000	–	pF
C_{OSS}	Output Capacitance		–	500	–	pF
C_{RSS}	Reverse Transfer Capacitance		–	65	–	pF

SOURCE TO DRAIN DIODE SPECIFICATIONS

PARAMETER	SYMBOL	TEST CONDITIONS	MIN	TYP	MAX	UNITS
Source to Drain Diode Voltage	V_{SD}	I_{SD} = 56 A	–	–	1.25	V
Reverse Recovery Time	t_{rr}	I_{SD} = 56 A, dI_{SD}/dt = 100 A/μs	–	–	110	ns
Reverse Recovered Charge	Q_{RR}	I_{SD} = 56 A, dI_{SD}/dt = 100 A/μs	–	–	320	nC

TYPICAL PERFORMANCE CURVES

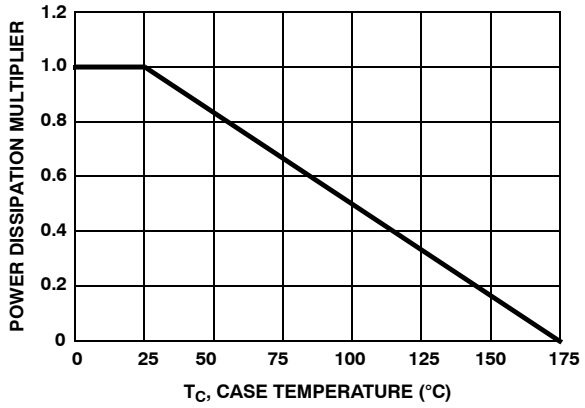

Figure 1. NORMALIZED POWER DISSIPATION vs CASE TEMPERATURE

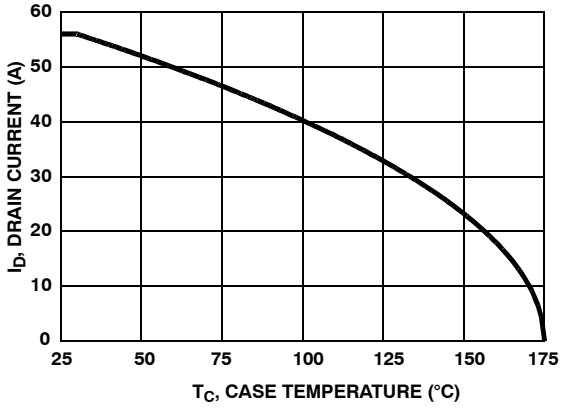

Figure 2. MAXIMUM CONTINUOUS DRAIN CURRENT vs CASE TEMPERATURE

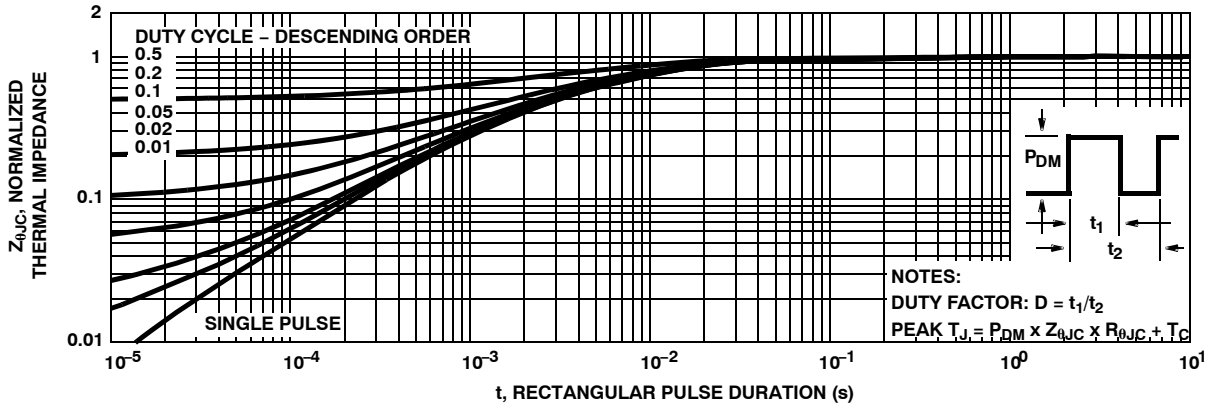

Figure 3. NORMALIZED MAXIMUM TRANSIENT THERMAL IMPEDANCE

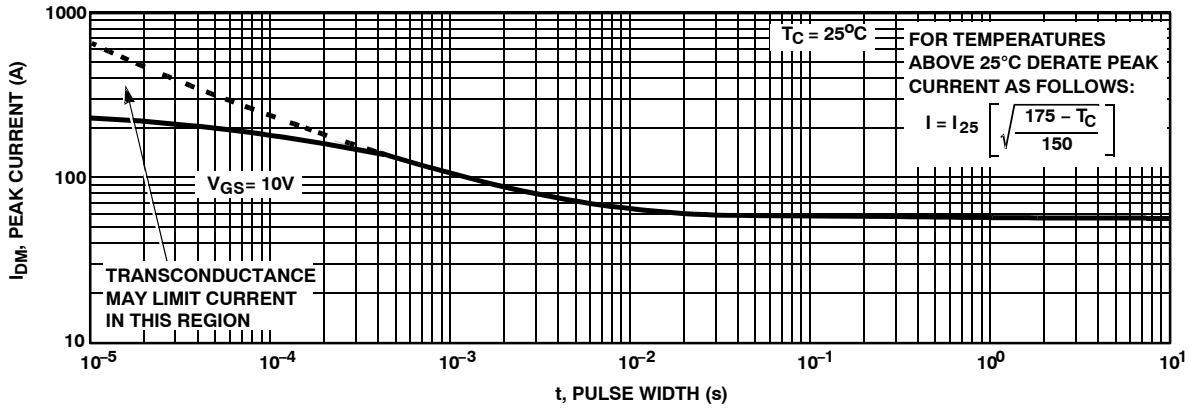

Figure 4. PEAK CURRENT CAPABILITY

TYPICAL PERFORMANCE CHARACTERISTICS (CONTINUED)

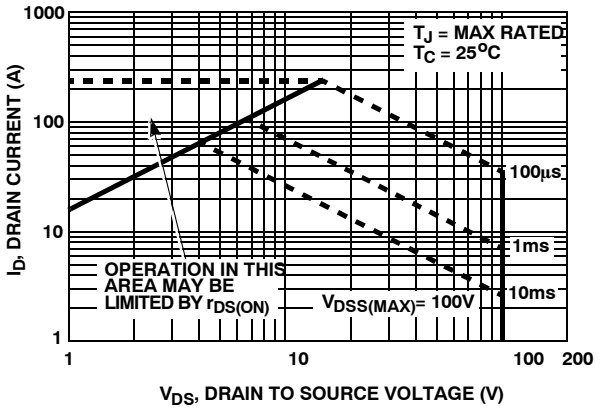

Figure 5. FORWARD BIAS SAFE OPERATING AREA

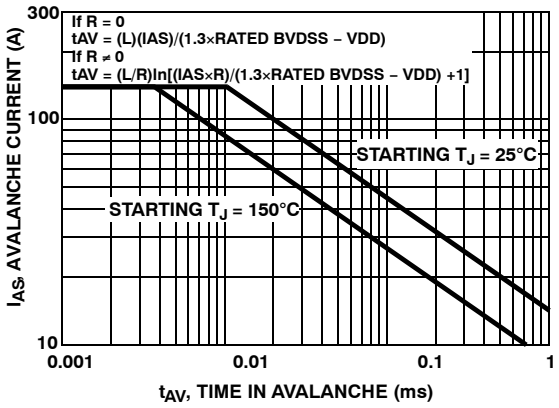

Figure 6. UNCLAMPED INDUCTIVE SWITCHING CAPABILITY

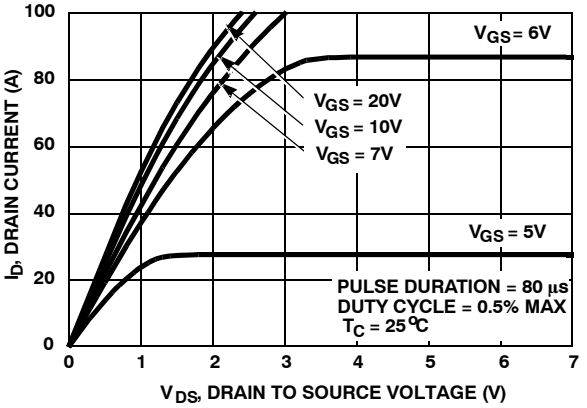

Figure 7. SATURATION CHARACTERISTICS

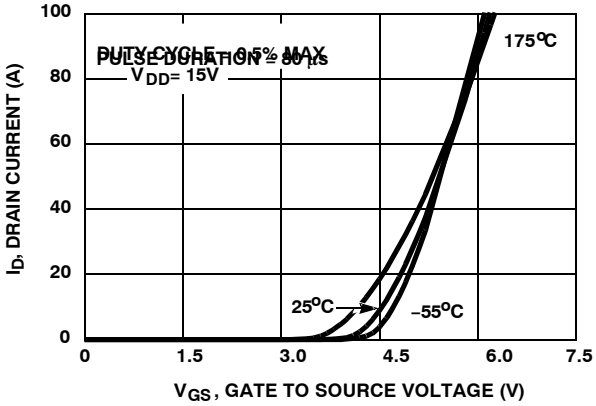

Figure 8. TRANSFER CHARACTERISTICS

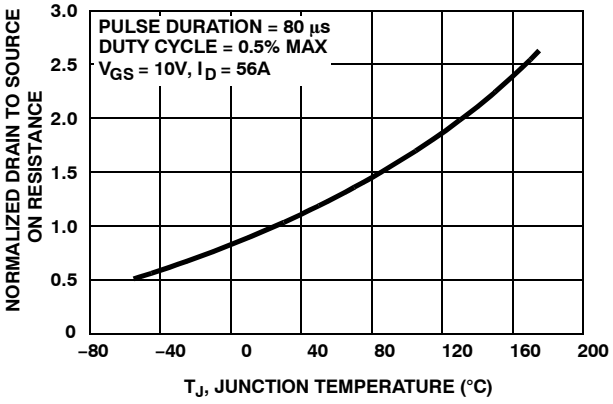

Figure 9. NORMALIZED DRAIN TO SOURCE ON RESISTANCE vs JUNCTION TEMPERATURE

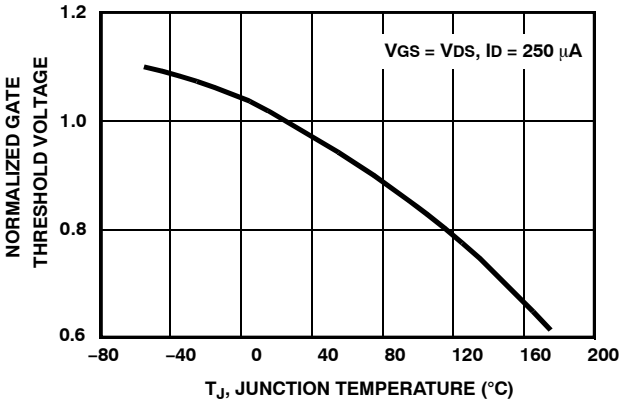

Figure 10. NORMALIZED GATE THRESHOLD VOLTAGE vs JUNCTION TEMPERATURE

TYPICAL PERFORMANCE CHARACTERISTICS (CONTINUED)

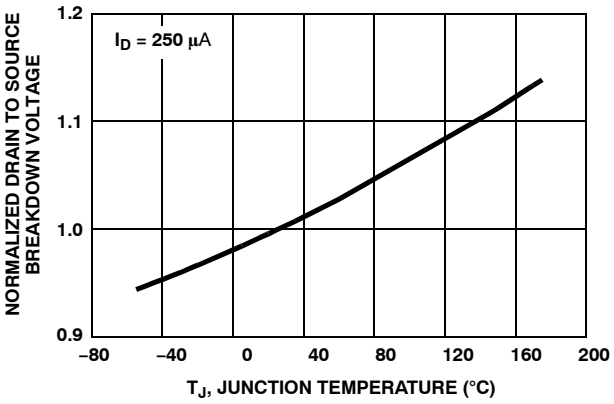

Figure 11. NORMALIZED DRAIN TO SOURCE BREAKDOWN VOLTAGE vs JUNCTION TEMPERATURE

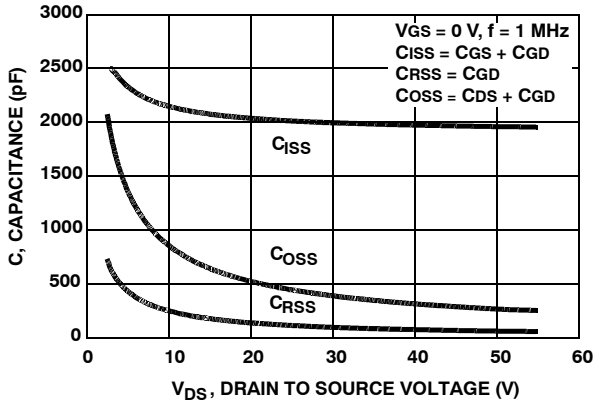

Figure 12. CAPACITANCE vs DRAIN TO SOURCE VOLTAGE

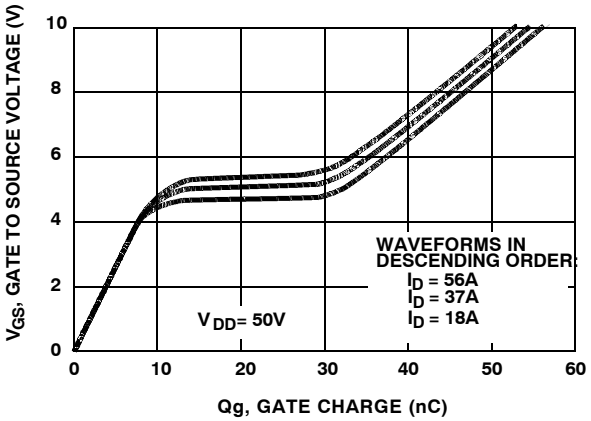

Figure 13. GATE CHARGE WAVEFORMS FOR CONSTANT GATE CURRENT

TEST CIRCUITS AND WAVEFORMS

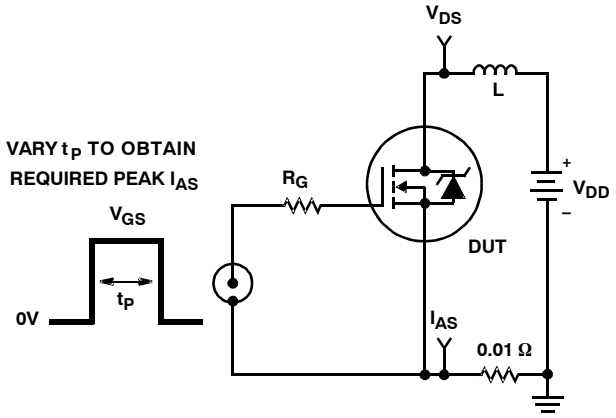

Figure 14. UNCLAMPED ENERGY TEST CIRCUIT

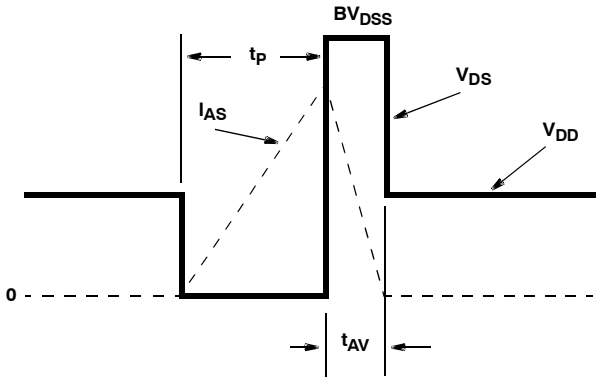

Figure 15. UNCLAMPED ENERGY WAVEFORMS

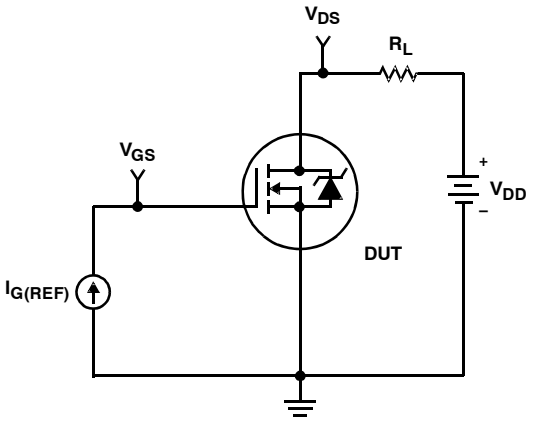

Figure 16. GATE CHARGE TEST CIRCUIT

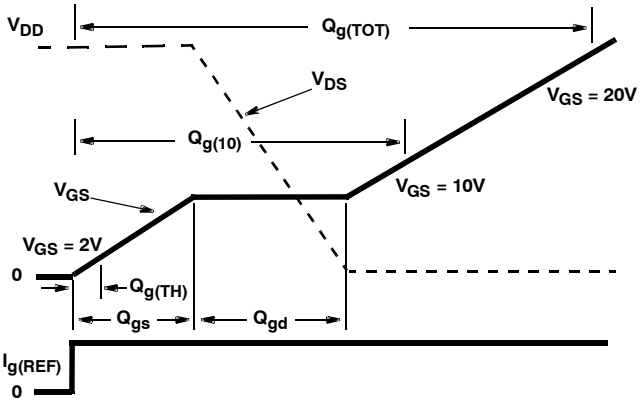

Figure 17. GATE CHARGE WAVEFORM

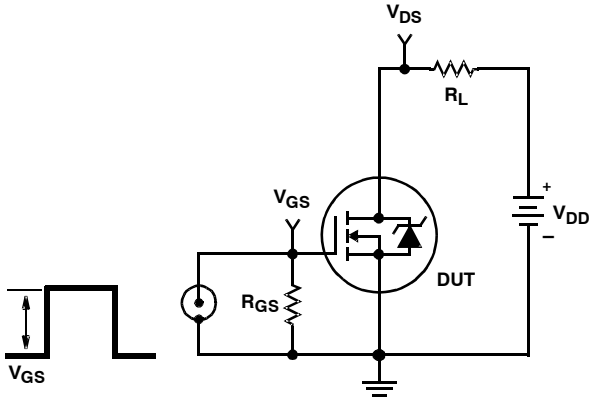

Figure 18. SWITCHING TIME TEST CIRCUIT

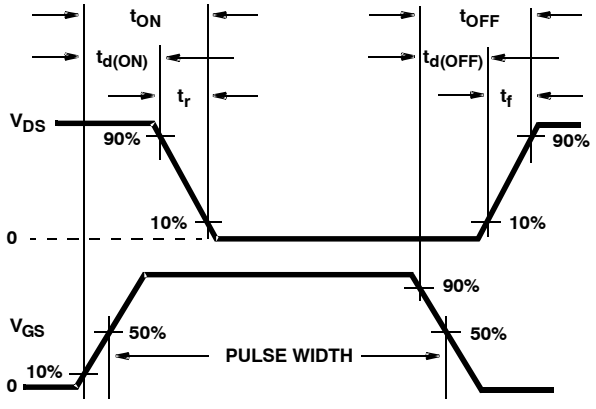

Figure 19. RESISTIVE SWITCHING WAVEFORMS

PSPICE Electrical Model

```
SUBCKT HUF75639 2 1 3 ;       rev Oct. 98
CA  12  8 2.8e−9
CB  15  14 2.65e−9
CIN  6  8 1.9e−9

DBODY 7 5 DBODYMOD
DBREAK 5 11  DBREAKMOD
DPLCAP 10 5 DPLCAPMOD

EBREAK 11 7 17  18 110
EDS  14  8  5  8 1
EGS  13  8  6  8 1
ESG 6 10 6 8 1
EVTHRES 6 21 19 8  1
EVTEMP 20 6 18 22 1

IT  8  17  1

LDRAIN 2 5 2e−9
LGATE 1  9 1e−9
LSOURCE  3  7 0.47e−9

RLGATE 1 9 10
RLDRAIN 2 5 20
RLSOURCE 3 7 4.69

MMED 16 6 8 8 MMEDMOD
MSTRO 16 6 8 8 MSTROMOD
MWEAK 16 21 8 8 MWEAKMOD

RBREAK  17  18  RBREAKMOD  1
RDRAIN 50 16 RDRAINMOD 1.3e−2
RGATE  9  20 0.7
RSLC1 5 51 RSLCMOD 1e−6
RSLC2 5 50 1e3
RSOURCE  8  7  RSOURCEMOD 4.5e−3
RVTHRES 22 8 RVTHRESMOD  1
RVTEMP 18 19 RVTEMPMOD 1

S1A  6  12  13  8  S1AMOD
S1B  13  12  13  8  S1BMOD
S2A  6  15  14  13  S2AMOD
S2B 13  15  14  13  S2BMOD

VBAT 22 19  DC  1

ESLC 51 50 VALUE = {(V(5,51)/ABS(V (5,51)))*(PWR(V(5,51)/(1e−6*115),4))}

.MODEL DBODYMOD D (IS = 1.4e−12  RS = 3.3e−3 XTI = 4.7  TRS1 = 2e−3  TRS2 = 0.1e−5  CJO = 3.3e−9  TT = 6.1e−8 M = 0.7)
.MODEL DBREAKMOD D (RS = 3.5e−  1TRS1 = 1e−  3TRS2 = 1e−6)
.MODEL DPLCAPMOD D (CJO = 2.2e−  9IS = 1e−3  0N = 10 M = 0.95 vj = 1.0)
.MODEL MMEDMOD NMOS (VTO = 3.5 KP = 4.8 IS = 1e−30 N = 10 TOX = 1 L = 1u W = 1u Rg = 0.7)
.MODEL MSTROMOD NMOS (VTO = 3.97 KP = 56.5 IS = 1e−30 N = 10 TOX = 1 L = 1u W = 1u)
.MODEL MWEAKMOD NMOS (VTO =3.11 KP = 0.085 IS = 1e−30 N = 10 TOX = 1 L = 1u W = 1u RG = 7 RS = 0.1)
.MODEL RBREAKMOD RES (TC1 = 0.8e−  3TC2 = 1e−6)
.MODEL RDRAINMOD RES (TC1 = 1e−2  TC2 = 1.75e−5)
.MODEL RSLCMOD RES (TC1 = 2.8e−3 TC2 = 14e−6)
.MODEL RSOURCEMOD RES (TC1 = 0 TC2 = 0)
.MODEL RVTHRESMOD RES (TC = −2.0e−3 TC2 = −1.75e−5)
.MODEL RVTEMPMOD RES (TC1 = −2.75e−  3TC2 = 0.05e−9)

.MODEL S1AMOD VSWITCH (RON = 1e−5  ROFF = 0.1  VON = −6.0  VOFF = −3.5)
.MODEL S1BMOD VSWITCH (RON = 1e−5  ROFF = 0.1  VON = −3.5  VOFF = −6.0)
.MODEL S2AMOD VSWITCH (RON = 1e−5  ROFF = 0.1  VON = −2.5  VOFF = 4.95)
.MODEL S2AMOD VSWITCH (RON = 1e−5  ROFF = 0.1  VON = 4.95  VOFF = −2.5)

.ENDS
```

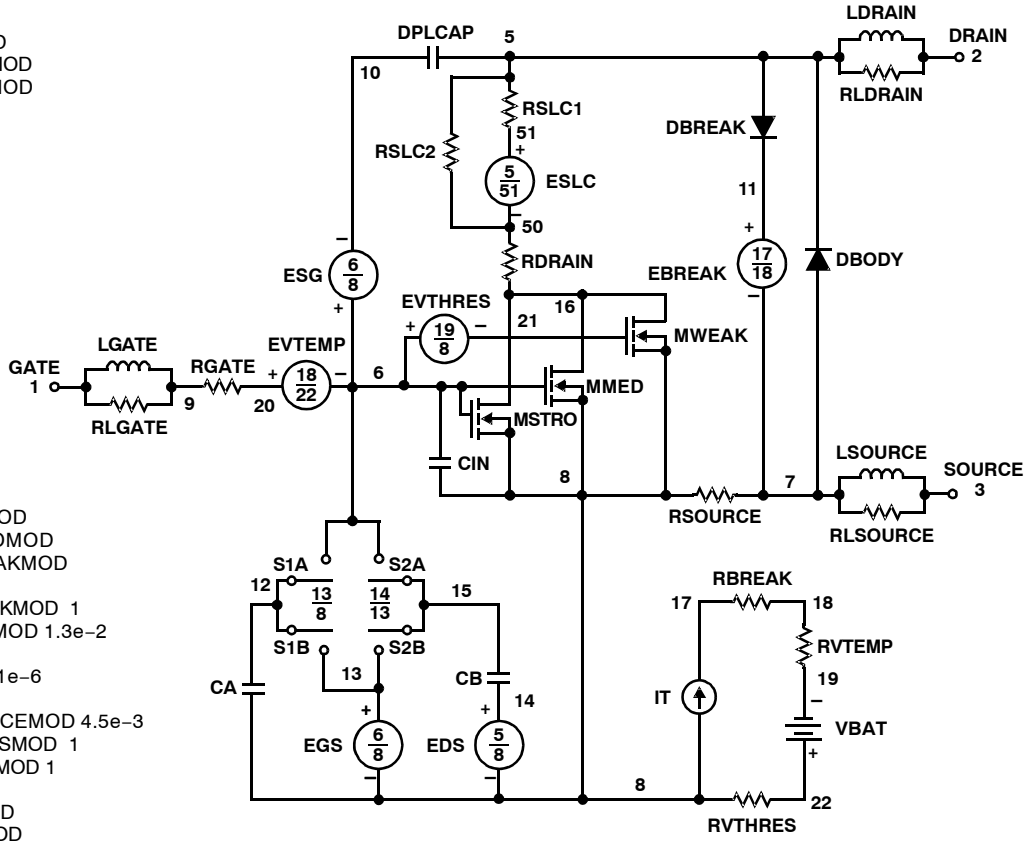

NOTE: For further discussion of the PSPICE model, consult **A New PSPICE Sub−Circuit for the Power MOSFET Featuring Global Temperature Options**; IEEE Power Electronics Specialist Conference Records, 1991, written by William J. Hepp and C. Frank Wheatley.

SABER Electrical Model

nom temp=25 deg c 100v Ultrafet

REV Oct. 98

```
template huf75639 n2,n1,n3
electrical n2,n1,n3
{
var i iscl
d..model dbodymod = (is=1.4e-12, xti=4.7, cjo=33e-10,tt=6.1e-8, m=0.7)
d..model dbreakmod = ()
d..model dplcapmod = (cjo=22e-10,is=1e-30,n=10,m=0.95, vj=1.0)
m..model mmedmod = (type=_n,vto=3.5,kp=4.8,is=1e-30, tox=1)
m..model mstrongmod = (type=_n,vto=3.97,kp=56.5,is=1e-30, tox=1)
m..model mweakmod = (type=_n,vto=3.11,kp=0.085,is=1e-30, tox=1)
sw_vcsp..model s1amod = (ron=1e-5,roff=0.1,von=-6.0,voff=-3.5)
sw_vcsp..model s1bmod = (ron=1e-5,roff=0.1,von=-3.5,voff=-6.0)
sw_vcsp..model s2amod = (ron=1e-5,roff=0.1,von=-2.5,voff=4.95)
sw_vcsp..model s2bmod = (ron=1e-5,roff=0.1,von=4.95,voff=-2.5)

c.ca n12 n8 = 28.5e-10
c.cb n15 n14 = 26.5e-10
c.cin n6 n8 = 19e-10

d.dbody n7 n71 = model=dbodymod
d.dbreak n72 n11 = model=dbreakmod
d.dplcap n10 n5 = model=dplcapmod

i.it n8 n17 = 1

l.ldrain n2 n5 = 2.0e-9
l.lgate n1 n9 = 1e-9
l.lsource n3 n7 = 4.69e-10

m.mmed n16 n6 n8 n8 = model=mmedmod, l=1u, w=1u
m.mstrong n16 n6 n8 n8 = model=mstrongmod, l=1u, w=1u
m.mweak n16 n21 n8 n8 = model=mweakmod, l=1u, w=1u

res.rbreak n17 n18 = 1, tc1=0.8e-3,tc2=-1e-6
res.rdbody n71 n5 = 3.3e-3, tc1=2.0e-3, tc2=0.1e-5
res.rdbreak n72 n5 = 3.5e-1, tc1=1e-3, tc2=1e-6
res.rdrain n50 n16 = 13e-3, tc1=1e-2,tc2=1.75e-5
res.rgate n9 n20 = 0.7
res.rldrain n2 n5 = 20
res.rlgate n1 n9 = 10
res.rlsource n3 n7 = 4.69
res.rslc1 n5 n51 = 1e-6, tc1=2.8e-3,tc2=14e-6
res.rslc2 n5 n50 = 1e3
res.rsource n8 n7 = 4.5e-3, tc1=0,tc2=0
res.rvtemp n18 n19 = 1, tc1=-2.75e-3,tc2=0.05e-9
res.rvthres n22 n8 = 1, tc1=-2e-3,tc2=-1.75e-5

spe.ebreak n11 n7 n17 n18 = 110
spe.eds n14 n8 n5 n8 = 1
spe.egs n13 n8 n6 n8 = 1
spe.esg n6 n10 n6 n8 = 1
spe.evtemp n20 n6 n18 n22 = 1
spe.evthres n6 n21 n19 n8 = 1

sw_vcsp.s1a n6 n12 n13 n8 = model=s1amod
sw_vcsp.s1b n13 n12 n13 n8 = model=s1bmod
sw_vcsp.s2a n6 n15 n14 n13 = model=s2amod
sw_vcsp.s2b n13 n15 n14 n13 = model=s2bmod

v.vbat n22 n19 = dc=1

equations {
i (n51->n50) +=iscl
iscl: v(n51,n50) = ((v(n5,n51)/(1e-9+abs(v(n5,n51))))*((abs(v(n5,n51)*1e6/115))** 4))
}
}
```

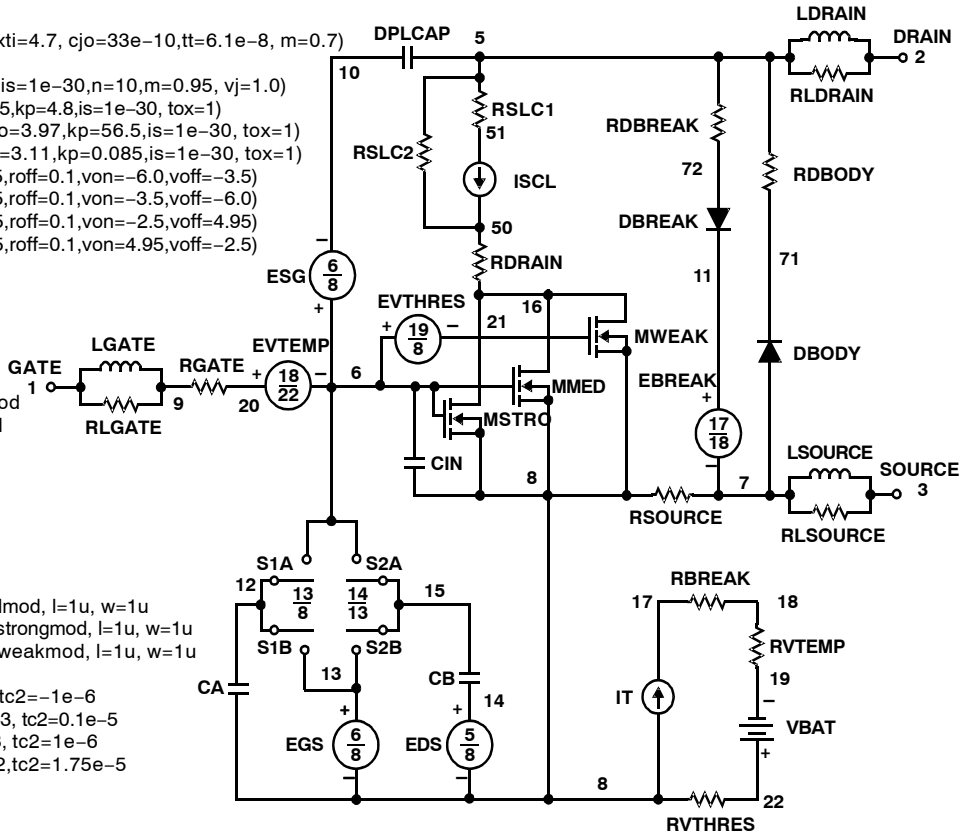

Spice Thermal Model

REV APRIL 1998

HUF75639

CTHERM1 TH 6 2.8e−3
CTHERM2 6 5 4.6e−3
CTHERM3 5 4 5.5e−3
CTHERM4 4 3 9.2e−3
CTHERM5 3 2 1.7e−2
CTHERM6 2 TL 4.3e−2

RTHERM1 TH 6 5.0e−4
RTHERM2 6 5 1.5e−3
RTHERM3 5 4 2.0e−2
RTHERM4 4 3 9.0e−2
RTHERM5 3 2 1.9e−1
RTHERM6 2 TL 2.9e−1

Saber Thermal Model

Saber thermal model HUF75639

template thermal_model th tl
thermal_c th, tl
{
ctherm.ctherm1 th 6 = 2.8e−3
ctherm.ctherm2 6 5 = 4.6e−3
ctherm.ctherm3 5 4 = 5.5e−3
ctherm.ctherm4 4 3 = 9.2e−3
ctherm.ctherm5 3 2 = 1.7e−2
ctherm.ctherm6 2 tl = 4.3e−2

rtherm.rtherm1 th 6 = 5.0e−4
rtherm.rtherm2 6 5 = 1.5e−3
rtherm.rtherm3 5 4 = 2.0e−2
rtherm.rtherm4 4 3 = 9.0e−2
rtherm.rtherm5 3 2 = 1.9e−1
rtherm.rtherm6 2 tl = 2.9e−1
}

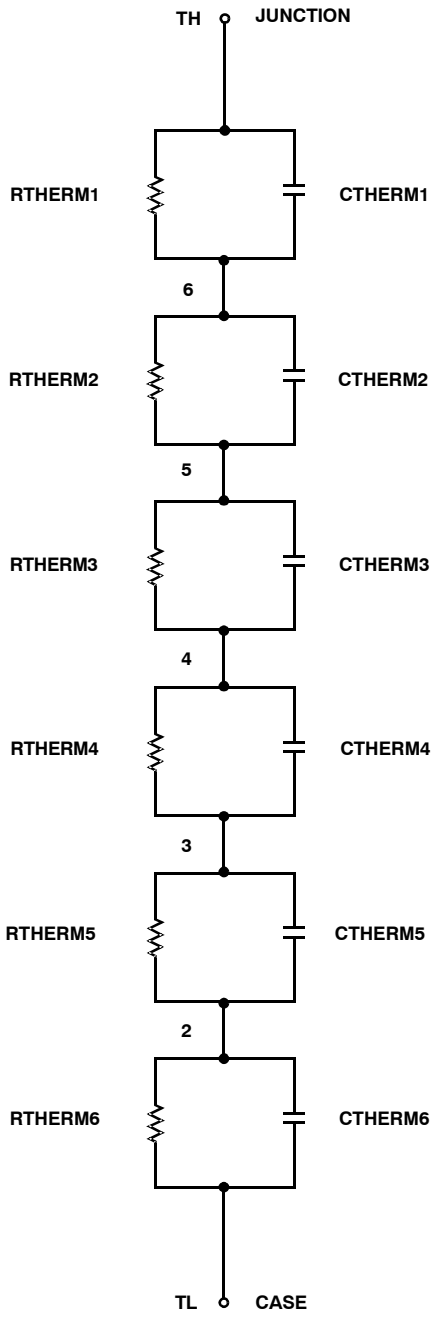

PSPICE is a trademark of MicroSim Corporation.
Saber is a registered trademark of Sabremark Limited Partnership.

MECHANICAL CASE OUTLINE
PACKAGE DIMENSIONS

ON Semiconductor®

TO−220−3LD
CASE 340AT
ISSUE A

DATE 03 OCT 2017

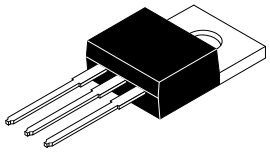

Scale 1:1

NOTES:
A) REFERENCE JEDEC, TO-220, VARIATION AB
B) ALL DIMENSIONS ARE IN MILLIMETERS.
C) DIMENSIONS COMMON TO ALL PACKAGE SUPPLIERS EXCEPT WHERE NOTED [ ].
D) LOCATION OF MOLDED FEATURE MAY VARY (LOWER LEFT CORNER, LOWER CENTER AND CENTER OF THE PACKAGE)
E DOES NOT COMPLY JEDEC STANDARD VALUE.
F) "A1" DIMENSIONS AS BELOW:
SINGLE GAUGE = 0.51 - 0.61
DUAL GAUGE = 1.10 - 1.45
G PRESENCE IS SUPPLIER DEPENDENT
H) SUPPLIER DEPENDENT MOLD LOCKING HOLES IN HEATSINK.

DOCUMENT NUMBER:	**98AON13818G**	Electronic versions are uncontrolled except when accessed directly from the Document Repository. Printed versions are uncontrolled except when stamped "CONTROLLED COPY" in red.
DESCRIPTION:	**TO−220−3LD**	**PAGE 1 OF 1**

ON Semiconductor and ON are trademarks of Semiconductor Components Industries, LLC dba ON Semiconductor or its subsidiaries in the United States and/or other countries. ON Semiconductor reserves the right to make changes without further notice to any products herein. ON Semiconductor makes no warranty, representation or guarantee regarding the suitability of its products for any particular purpose, nor does ON Semiconductor assume any liability arising out of the application or use of any product or circuit, and specifically disclaims any and all liability, including without limitation special, consequential or incidental damages. ON Semiconductor does not convey any license under its patent rights nor the rights of others.

TO−247−3LD SHORT LEAD
CASE 340CK
ISSUE A

DATE 31 JAN 2019

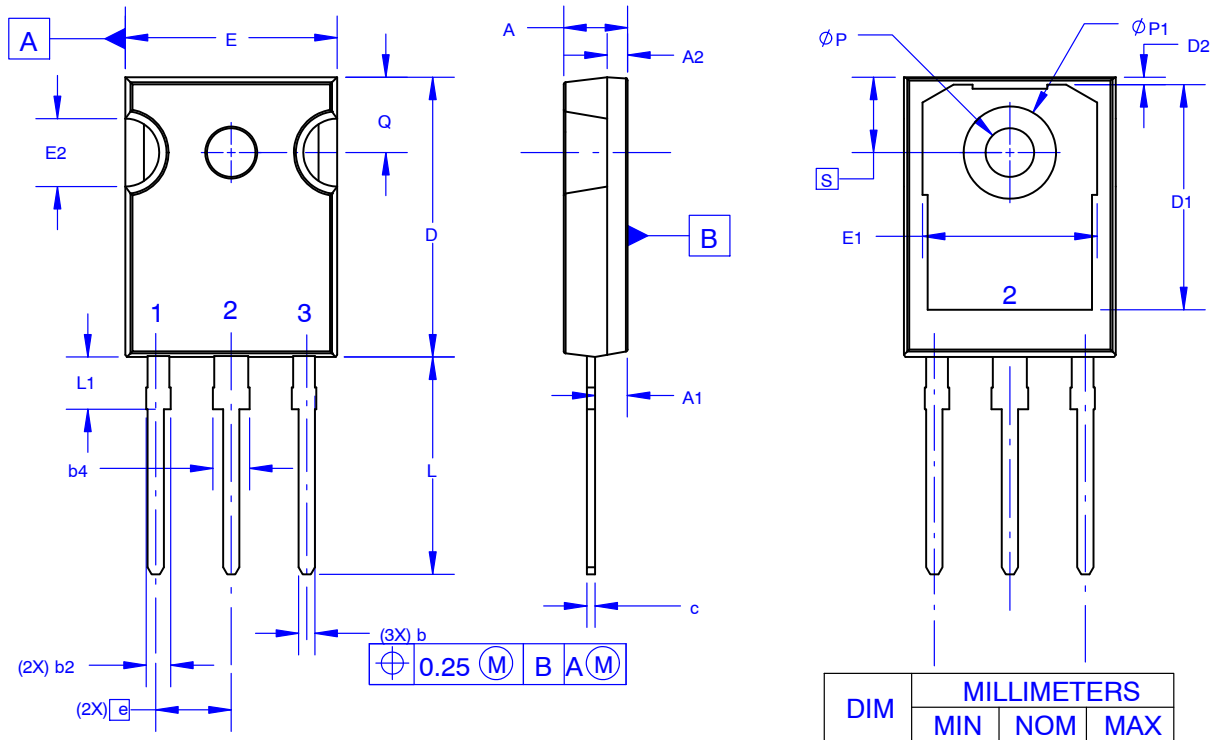

DIM	MILLIMETERS		
	MIN	NOM	MAX
A	4.58	4.70	4.82
A1	2.20	2.40	2.60
A2	1.40	1.50	1.60
b	1.17	1.26	1.35
b2	1.53	1.65	1.77
b4	2.42	2.54	2.66
c	0.51	0.61	0.71
D	20.32	20.57	20.82
D1	13.08	~	~
D2	0.51	0.93	1.35
E	15.37	15.62	15.87
E1	12.81	~	~
E2	4.96	5.08	5.20
e	~	5.56	~
L	15.75	16.00	16.25
L1	3.69	3.81	3.93
ØP	3.51	3.58	3.65
ØP1	6.60	6.80	7.00
Q	5.34	5.46	5.58
S	5.34	5.46	5.58

NOTES: UNLESS OTHERWISE SPECIFIED.

A. DIMENSIONS ARE EXCLUSIVE OF BURRS, MOLD FLASH, AND TIE BAR EXTRUSIONS.
B. ALL DIMENSIONS ARE IN MILLIMETERS.
C. DRAWING CONFORMS TO ASME Y14.5 - 2009.
D. DIMENSION A1 TO BE MEASURED IN THE REGION DEFINED BY L1.
E. LEAD FINISH IS UNCONTROLLED IN THE REGION DEFINED BY L1.

GENERIC MARKING DIAGRAM*

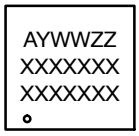

XXXX = Specific Device Code
A = Assembly Location
Y = Year
WW = Work Week
ZZ = Assembly Lot Code

*This information is generic. Please refer to device data sheet for actual part marking. Pb−Free indicator, “G” or microdot “▪”, may or may not be present. Some products may not follow the Generic Marking.

DOCUMENT NUMBER:	**98AON13851G**	Electronic versions are uncontrolled except when accessed directly from the Document Repository. Printed versions are uncontrolled except when stamped “CONTROLLED COPY” in red.
DESCRIPTION:	**TO−247−3LD SHORT LEAD**	**PAGE 1 OF 1**

onsemi and onsemi are trademarks of Semiconductor Components Industries, LLC dba **onsemi** or its subsidiaries in the United States and/or other countries. **onsemi** reserves the right to make changes without further notice to any products herein. **onsemi** makes no warranty, representation or guarantee regarding the suitability of its products for any particular purpose, nor does **onsemi** assume any liability arising out of the application or use of any product or circuit, and specifically disclaims any and all liability, including without limitation special, consequential or incidental damages. **onsemi** does not convey any license under its patent rights nor the rights of others.

© Semiconductor Components Industries, LLC, 2016

MECHANICAL CASE OUTLINE
PACKAGE DIMENSIONS

ON Semiconductor®

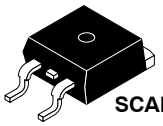

SCALE 1:1

D²PAK–3 (TO–263, 3–LEAD)
CASE 418AJ
ISSUE F

DATE 11 MAR 2021

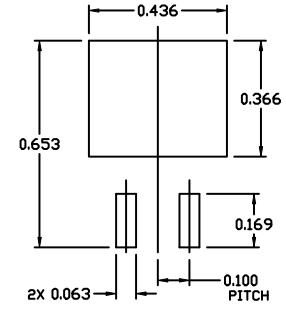

RECOMMENDED
MOUNTING FOOTPRINT

* For additional information on our Pb-Free strategy and soldering details, please download the ON Semiconductor Soldering and Mounting Techniques Reference Manual, SOLDERRM/D.

NOTES:

1. DIMENSIONING AND TOLERANCING PER ASME Y14.5M, 2009.
2. CONTROLLING DIMENSION: INCHES
3. CHAMFER OPTIONAL.
4. DIMENSIONS D AND E DO NOT INCLUDE MOLD FLASH. MOLD FLASH SHALL NOT EXCEED 0.005 PER SIDE. THESE DIMENSIONS ARE MEASURED AT THE OUTERMOST EXTREMES OF THE PLASTIC BODY AT DATUM H.
5. THERMAL PAD CONTOUR IS OPTIONAL WITHIN DIMENSIONS E, L1, D1, AND E1.
6. OPTIONAL MOLD FEATURE.
7. ①, ② ... OPTIONAL CONSTRUCTION FEATURE CALL OUTS.

	INCHES		MILLIMETERS	
DIM	MIN.	MAX.	MIN.	MAX.
A	0.160	0.190	4.06	4.83
A1	0.000	0.010	0.00	0.25
b	0.020	0.039	0.51	0.99
c	0.012	0.029	0.30	0.74
c2	0.045	0.065	1.14	1.65
D	0.330	0.380	8.38	9.65
D1	0.260	---	6.60	---
E	0.380	0.420	9.65	10.67
E1	0.245	---	6.22	---
e	0.100 BSC		2.54 BSC	
H	0.575	0.625	14.60	15.88
L	0.070	0.110	1.78	2.79
L1	---	0.066	---	1.68
L2	---	0.070	---	1.78
L3	0.010 BSC		0.25 BSC	
M	0°	8°	0°	8°

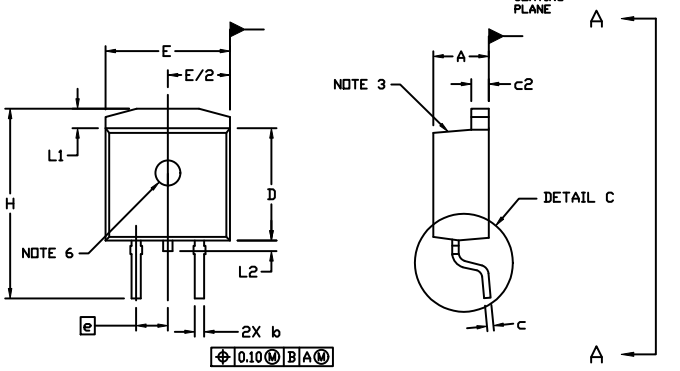

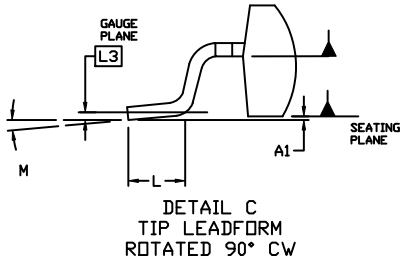

DETAIL C
TIP LEADFORM
ROTATED 90° CW

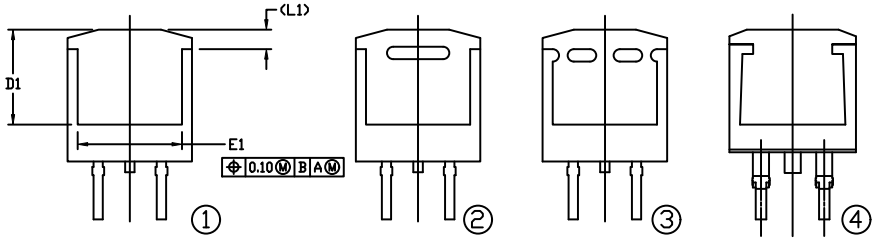

VIEW A–A

VIEW A–A
OPTIONAL CONSTRUCTIONS

GENERIC MARKING DIAGRAMS*

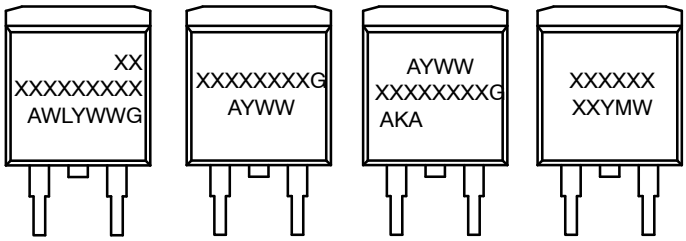

IC | Standard | Rectifier | SSG

XXXXXX = Specific Device Code
A = Assembly Location
WL = Wafer Lot
Y = Year
WW = Work Week
W = Week Code (SSG)
M = Month Code (SSG)
G = Pb–Free Package
AKA = Polarity Indicator

*This information is generic. Please refer to device data sheet for actual part marking. Pb–Free indicator, “G” or microdot “ ▪”, may or may not be present. Some products may not follow the Generic Marking.

DOCUMENT NUMBER:	**98AON56370E**	Electronic versions are uncontrolled except when accessed directly from the Document Repository. Printed versions are uncontrolled except when stamped “CONTROLLED COPY” in red.
DESCRIPTION:	**D²PAK–3 (TO–263, 3–LEAD)**	**PAGE 1 OF 1**

ON Semiconductor and ON are trademarks of Semiconductor Components Industries, LLC dba ON Semiconductor or its subsidiaries in the United States and/or other countries. ON Semiconductor reserves the right to make changes without further notice to any products herein. ON Semiconductor makes no warranty, representation or guarantee regarding the suitability of its products for any particular purpose, nor does ON Semiconductor assume any liability arising out of the application or use of any product or circuit, and specifically disclaims any and all liability, including without limitation special, consequential or incidental damages. ON Semiconductor does not convey any license under its patent rights nor the rights of others.

© Semiconductor Components Industries, LLC, 2018

MECHANICAL CASE OUTLINE
PACKAGE DIMENSIONS

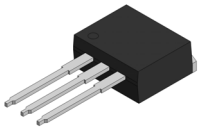

I2PAK (TO−262 3 LD)
CASE 418AV
ISSUE A

DATE 30 AUG 2022

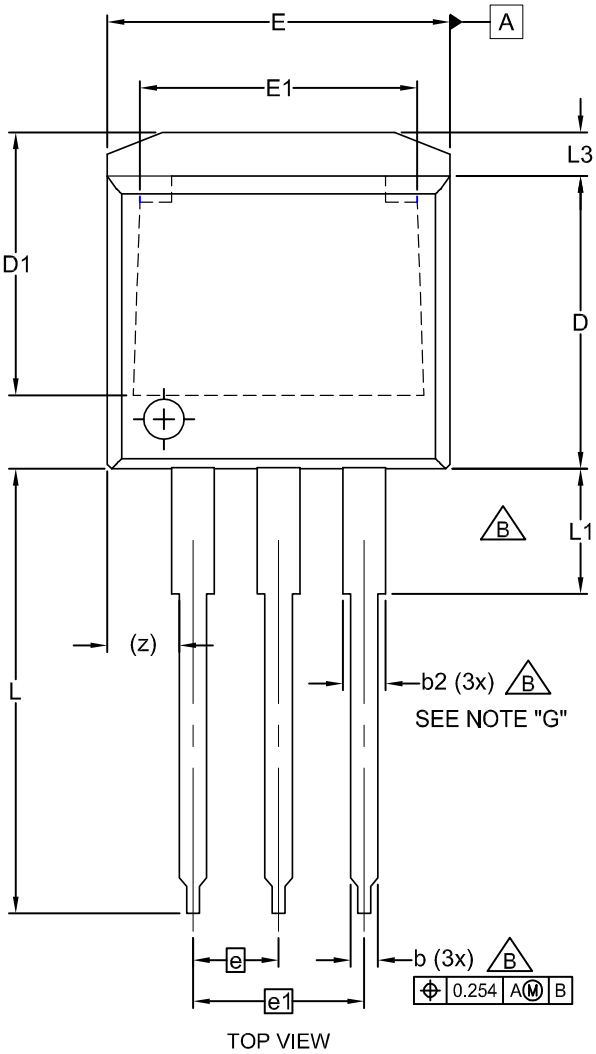

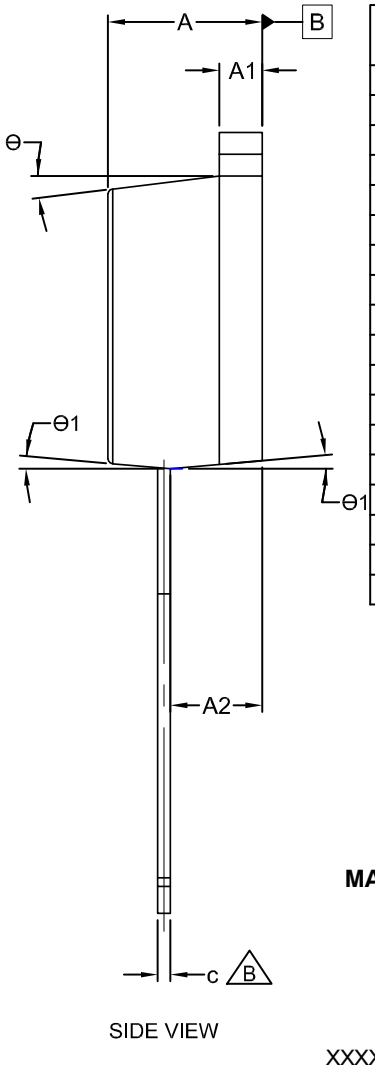

DIM	MILLIMETERS		
	MIN	NOM	MAX
A	4.06	4.45	4.83
A1	1.14	1.27	1.40
A2	2.03	2.41	2.79
b	0.64	0.77	0.90
b2	1.14	1.46	1.78
c	0.33	0.49	0.64
D	8.64	9.15	9.65
D1	6.86	7.37	7.88
E	9.65	9.97	10.29
E1	6.22	7.28	8.33
e	2.54 BSC		
e1	5.08 BSC		
L	12.70	13.72	14.73
L1	2.80	3.38	3.96
L3	1.00	1.20	1.40
z	2.13 REF		
Θ	0°	--	7°
Θ1	0°	--	5°

NOTES:

A. EXCEPT WHERE NOTED CONFORMS TO TO262 JEDEC VARIATION AA.
B. DOES NOT COMPLY JEDEC STD. VALUE.
C. ALL DIMENSIONS ARE IN MILLIMETERS.
D. DIMENSIONS ARE EXCLUSIVE OF BURRS, MOLD FLASH AND TIE BAR PROTRUSIONS.
E. DIMENSION AND TOLERANCE AS PER ANSI Y14.5-1994.
F. LOCATION OF PIN HOLE MAY VARY (LOWER LEFT CORNER, LOWER CENTER AND CENTER OF PACKAGE)
G. MAXIMUM WIDTH FOR F102 DEVICE = 1.35 MAX.

GENERIC MARKING DIAGRAM*

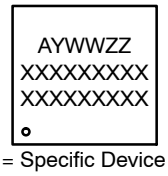

XXXX = Specific Device Code
A = Assembly Location
Y = Year
WW = Work Week
ZZ = Assembly Lot Code

*This information is generic. Please refer to device data sheet for actual part marking. Pb−Free indicator, “G” or microdot “▪”, may or may not be present. Some products may not follow the Generic Marking.

DOCUMENT NUMBER:	98AON13814G	Electronic versions are uncontrolled except when accessed directly from the Document Repository. Printed versions are uncontrolled except when stamped “CONTROLLED COPY” in red.
DESCRIPTION:	I2PAK (TO−262 3 LD)	PAGE 1 OF 1

onsemi and onsemi are trademarks of Semiconductor Components Industries, LLC dba **onsemi** or its subsidiaries in the United States and/or other countries. **onsemi** reserves the right to make changes without further notice to any products herein. **onsemi** makes no warranty, representation or guarantee regarding the suitability of its products for any particular purpose, nor does **onsemi** assume any liability arising out of the application or use of any product or circuit, and specifically disclaims any and all liability, including without limitation special, consequential or incidental damages. **onsemi** does not convey any license under its patent rights nor the rights of others.

onsemi, , and other names, marks, and brands are registered and/or common law trademarks of Semiconductor Components Industries, LLC dba "**onsemi**" or its affiliates and/or subsidiaries in the United States and/or other countries. **onsemi** owns the rights to a number of patents, trademarks, copyrights, trade secrets, and other intellectual property. A listing of **onsemi**'s product/patent coverage may be accessed at www.onsemi.com/site/pdf/Patent−Marking.pdf. **onsemi** reserves the right to make changes at any time to any products or information herein, without notice. The information herein is provided "as−is" and **onsemi** makes no warranty, representation or guarantee regarding the accuracy of the information, product features, availability, functionality, or suitability of its products for any particular purpose, nor does **onsemi** assume any liability arising out of the application or use of any product or circuit, and specifically disclaims any and all liability, including without limitation special, consequential or incidental damages. Buyer is responsible for its products and applications using **onsemi** products, including compliance with all laws, regulations and safety requirements or standards, regardless of any support or applications information provided by **onsemi**. "Typical" parameters which may be provided in **onsemi** data sheets and/or specifications can and do vary in different applications and actual performance may vary over time. All operating parameters, including "Typicals" must be validated for each customer application by customer's technical experts. **onsemi** does not convey any license under any of its intellectual property rights nor the rights of others. **onsemi** products are not designed, intended, or authorized for use as a critical component in life support systems or any FDA Class 3 medical devices or medical devices with a same or similar classification in a foreign jurisdiction or any devices intended for implantation in the human body. Should Buyer purchase or use **onsemi** products for any such unintended or unauthorized application, Buyer shall indemnify and hold **onsemi** and its officers, employees, subsidiaries, affiliates, and distributors harmless against all claims, costs, damages, and expenses, and reasonable attorney fees arising out of, directly or indirectly, any claim of personal injury or death associated with such unintended or unauthorized use, even if such claim alleges that **onsemi** was negligent regarding the design or manufacture of the part. **onsemi** is an Equal Opportunity/Affirmative Action Employer. This literature is subject to all applicable copyright laws and is not for resale in any manner.

ADDITIONAL INFORMATION

TECHNICAL PUBLICATIONS:
Technical Library: www.onsemi.com/design/resources/technical−documentation
onsemi Website: www.onsemi.com

ONLINE SUPPORT: www.onsemi.com/support
For additional information, please contact your local Sales Representative at www.onsemi.com/support/sales