# MOSFET – N-Channel, UltraFET TRENCH

## 150 V, 0.047 mΩ 4.9 A

# FDS2572

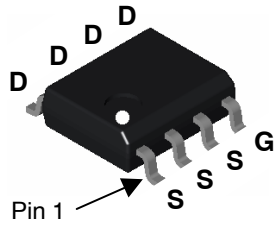


**SOIC8**
**CASE 751EB**

### Description

UltraFET Devices Combine Characteristics that enable benchmark efficiency in power conversion applications. Optimized for $R_{DS(on)}$, low ESR, low total and Miller gate charge, these devices are ideal for high frequency DC−DC converters.

### Features

- $R_{DS(on)}$ = 0.040 mΩ (Typ.), $V_{GS}$ = 10 V
- $Q_{g(TOT)}$ = 29 nC (Typ.), $V_{GS}$ = 10 V
- Low $Q_{RR}$ Body Diode
- Maximized Efficiency at High Frequencies
- UIS Rated
- These Device is Pb−Free and Halide Free

### Typical Applications

- DC−DC Converters
- Telecom and Data−Com Distributed Power Architectures
- 48−volt I/P Half−Bridge/Full−Bridge
- 24−volt Forward and Push−Pull topologies

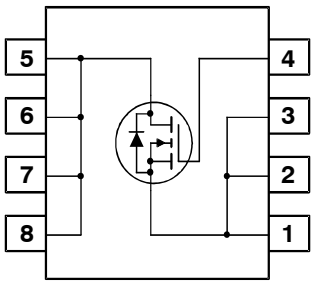


### MARKING DIAGRAM




&Z = Assembly Plant Code
&3 = Date Code (Year & Week)
&K = Lot Traceability Code
FDS2572 = Specific Device Code

### ORDERING INFORMATION

| Device | Package | Shipping† |
|---|---|---|
| FDS2572 | SOIC8 (Pb−Free,Halide Free) | 2,500 / Tape & Reel |

†For information on tape and reel specifications, including part orientation and tape sizes, please refer to our Tape and Reel Packaging Specifications Brochure, BRD8011/D.

© Semiconductor Components Industries, LLC, 2016

## ABSOLUTE MAXIMUM RATINGS ($T_A$ = 25°C unless otherwise noted)

| Symbol | Parameter | Value | Unit |
|---|---|---|---|
| $V_{DSS}$ | Drain to Source Voltage | 150 | V |
| $V_{GS}$ | Gate to Source Voltage | ±20 | V |
| $I_D$ | Drain Current<br>– Continuous ($T_C$ = 25°C, $V_{GS}$ = 10 V, $R_{\theta JA}$ = 50°C/W)<br>– Continuous ($T_C$ = 100°C, $V_{GS}$ = 10 V, $R_{\theta JA}$ = 50°C/W)<br>– Pulsed | <br>4.9<br>3.1<br>Figure 4 | A |
| $P_D$ | Power Dissipation $T_C$ = 25°C | 2.5 | W |
| | Derate Above 25°C | 20 | mW/°C |
| $T_J$, $T_{stg}$ | Operating and Storage Junction Temperature Range | –55 to +150 | °C |

Stresses exceeding those listed in the Maximum Ratings table may damage the device. If any of these limits are exceeded, device functionality should not be assumed, damage may occur and reliability may be affected.

## THERMAL CHARACTERISTICS

| Symbol | Parameter | Value | Unit |
|---|---|---|---|
| $R_{\theta JC}$ | Thermal Resistance, Junction to Case (Note 1) | 25 | °C/W |
| $R_{\theta JA}$ | Thermal Resistance, Junction to Case at 10 Seconds (Note 2) | 50 | |
| $R_{\theta JA}$ | Thermal Resistance, Junction to Case at Steady State (Note 2) | 85 | °C/W |

## ELECTRICAL CHARACTERISTICS ($T_J$ = 25°C unless otherwise noted)

| Symbol | Parameter | Test Conditions | Min | Typ | Max | Unit |
|---|---|---|---|---|---|---|
| **OFF CHARACTERISTICS** | | | | | | |
| $BV_{DSS}$ | Drain to Source Breakdown Voltage | $I_D$ = 250 μA, $V_{GS}$ = 0 V | 150 | – | – | V |
| $I_{DSS}$ | Zero Gate Voltage Drain Current | $V_{DS}$ = 120 V, $T_C$ = 150°C | – | – | 1 | μA |
| | | $V_{DS}$ = 0 V, $T_C$ = 150°C | – | – | 250 | |
| $I_{GSS}$ | Gate to Source Leakage Current | $V_{GS}$ = ±20 V | – | – | ±100 | nA |
| **ON CHARACTERISTICS** | | | | | | |
| $V_{GS(th)}$ | Gate to Source Threshold Voltage | $V_{GS}$ = $V_{DS}$, $I_D$ = 250 μA | 2 | – | 4 | V |
| $R_{DS(on)}$ | Drain–Source On–Resistance | $I_D$ = 4.9 A, $V_{GS}$ = 10 V | – | 0.040 | 0.047 | Ω |
| $R_{DS(on}$ | Drain–Source On–Resistance | $I_D$ = 4.9 A, $V_{GS}$ = 6 V | – | 0.044 | 0.053 | Ω |
| **DYNAMIC CHARACTERISTICS** | | | | | | |
| $C_{iss}$ | Input Capacitance | $V_{DS}$ = 25 V, $V_{GS}$ = 0 V, f = 1 MHz | – | 2050 | 2870 | pF |
| $C_{oss}$ | Output Capacitance | | – | 220 | 310 | pF |
| $C_{rss}$ | Reverse Transfer Capacitance | | – | 48 | 80 | pF |
| $R_g$ | Gate Resistance | | 0.1 | 1.3 | 3.0 | Ω |
| $Q_{g(TOT)}$ | Total Gate Charge at 10 V | $V_{GS}$ = 0 V to 10 V,<br>$V_{DD}$ = 75 v, $I_D$ = 4.9 A $I_g$ = 1.0 mA | – | 29 | 38 | nC |
| $Q_{g(TH)}$ | Threshold Gate Charge | $V_{GS}$ = 0 V to 2 V,<br>$V_{DD}$ = 75 v, $I_D$ = 4.9 A $I_g$ = 1.0 mA | – | 4 | 6 | nC |
| $Q_{gs}$ | Gate to Source Gate Charge | | – | 8 | – | nC |
| $Q_{gd}$ | Gate to Drain “Miller” Charge | $V_{DD}$ = 75 v, $I_D$ = 4.9 A $I_g$ = 1.0 mA | – | 6 | – | nC |
| $Q_{gs2}$ | Gate Charge Threshold to Plateau | | – | 4 | – | nC |
| **SWITCHING CHARACTERISTICS** | | | | | | |
| $t_{ON}$ | Turn–On Time | $V_{DD}$ = 75 V, $I_D$ = 4.9 A,<br>$V_{GS}$ = 10 V, $R_G$ = 10 Ω | – | – | 27 | ns |
| $t_{d(ON)}$ | Turn–On Delay Time | | – | 14 | – | ns |
| $t_r$ | Rise Time | | – | 4 | – | ns |
| $t_{d(OFF)}$ | Turn–Off Delay Time | | – | 44 | – | ns |

**ELECTRICAL CHARACTERISTICS (continued)** ($T_J$ = 25°C unless otherwise noted)

| Symbol | Parameter | Test Conditions | Min | Typ | Max | Unit |
|---|---|---|---|---|---|---|
| **SWITCHING CHARACTERISTICS** | | | | | | |
| $t_f$ | Fall Time | | – | 22 | – | ns |
| $t_{OFF}$ | Turn–Off Time | | – | – | 100 | ns |
| **DRAIN–SOURCE DIODE CHARACTERISTICS** | | | | | | |
| $V_{SD}$ | Source to Drain Diode Forward Voltage | $I_{SD}$ = 4.9 A | – | – | 1.25 | V |
| | | $I_{SD}$ = 3.1 A | – | – | 1.0 | |
| $t_{rr}$ | Reverse Recovery Time | $I_{SD}$ = 4.9 A, $dI_{SD}/dt$ = 100 A/μs | – | – | 72 | ns |
| $Q_{rr}$ | Reverse Recoverd Charge | $I_{SD}$ = 4.9, $dI_{SD}/dt$ = 100 A/μs | – | – | 158 | nC |

Product parametric performance is indicated in the Electrical Characteristics for the listed test conditions, unless otherwise noted. Product performance may not be indicated by the Electrical Characteristics if operated under different conditions.

NOTES:

1. $R_{\theta JA}$ is the sum of the junction–to–case and case–to–ambient thermal resistance where the case thermal referance is defined as the solder mounting surface of the drain pins. $R_{\theta JC}$ is guaranteed by design while $R_{\theta CA}$ is determined by the user's board design.
2. $R_{\theta JA}$ is measured with 1.0 $in^2$ copper on FR–4 board

## TYPICAL CHARACTERISTICS

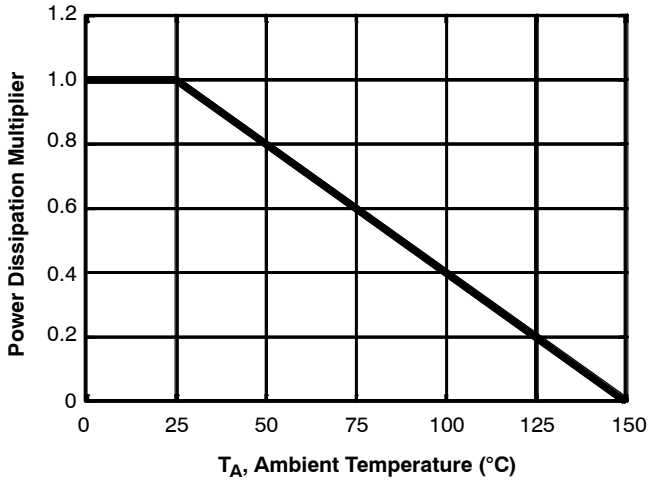


**Figure 1. Normalized Power Dissipation vs Ambient Temperature**

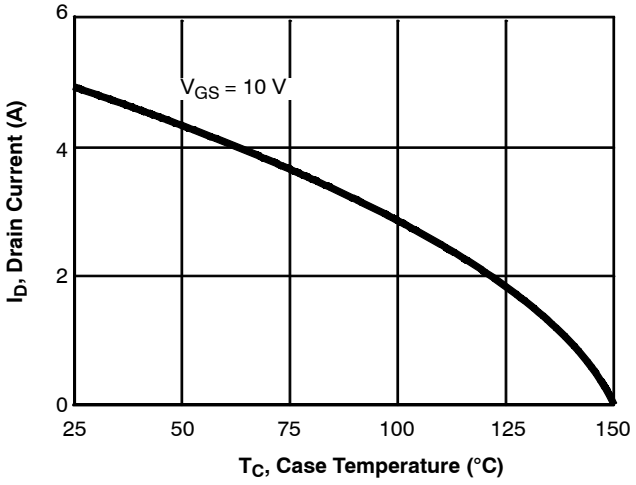


**Figure 2. Maximum Continuous Drain Current vs Case Temperature**

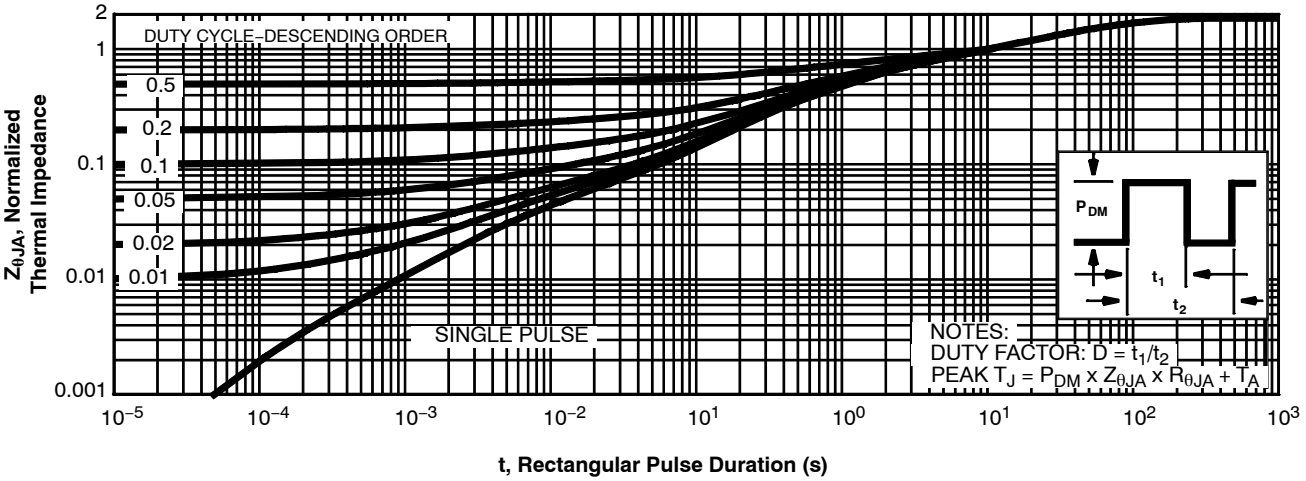


**Figure 3. Normalized Maximum Transient Thermal Impedance**

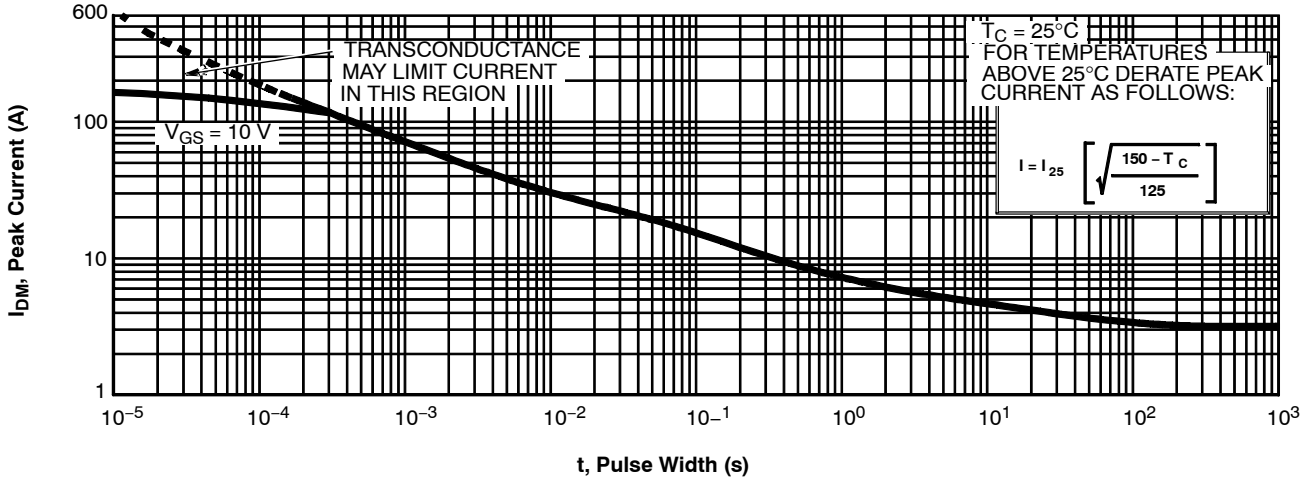


**Figure 4. Peak Current Capability**

## TYPICAL CHARACTERISTICS (CONTINUED)

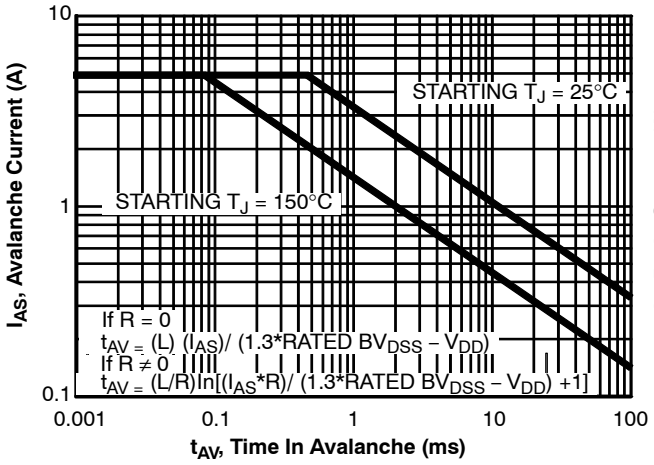


**Figure 5. Unclamped Inductive Switching Capability**

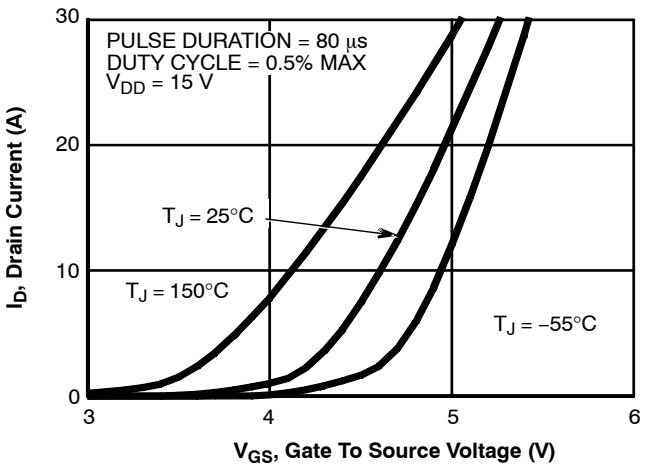


**Figure 6. Transfer Characteristics**

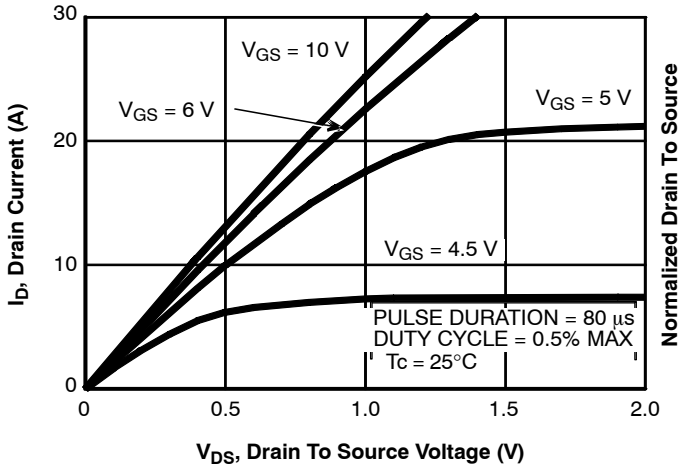


**Figure 7. Saturation Characteristics**

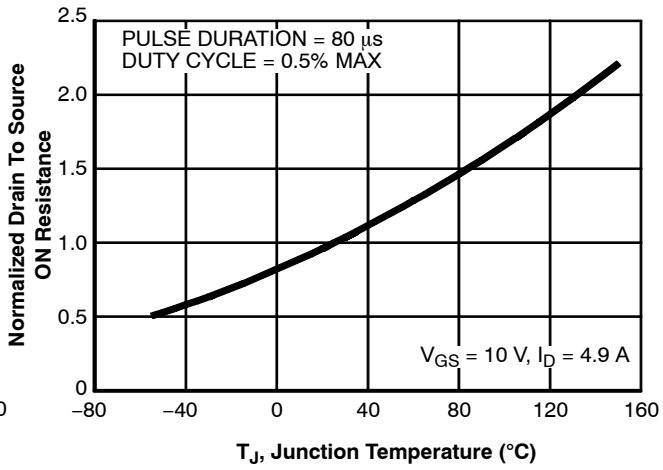


**Figure 8. Normalized Drain to Source On Resistance vs Junction Temperature**

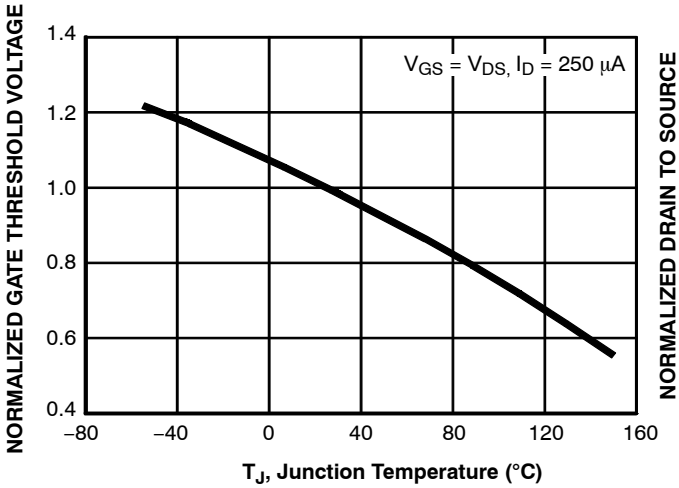


**Figure 9. Normalized Gate Threshold Voltage vs Junction Temperature**

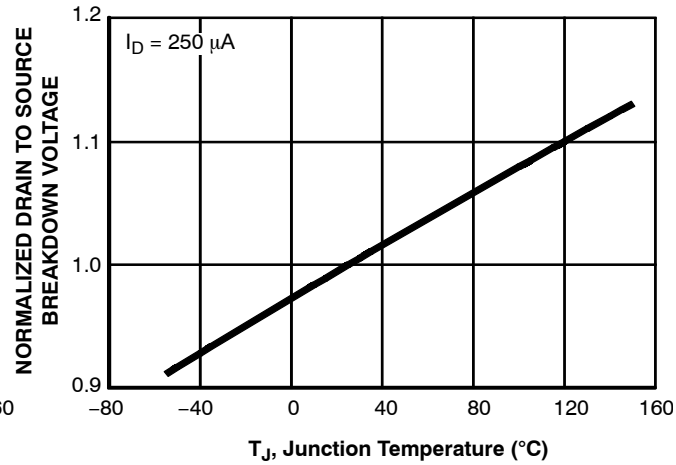


**Figure 10. Normalized Drain to Source Breakdown Voltage vs Junction Temperature**

## TYPICAL CHARACTERISTICS (CONTINUED)

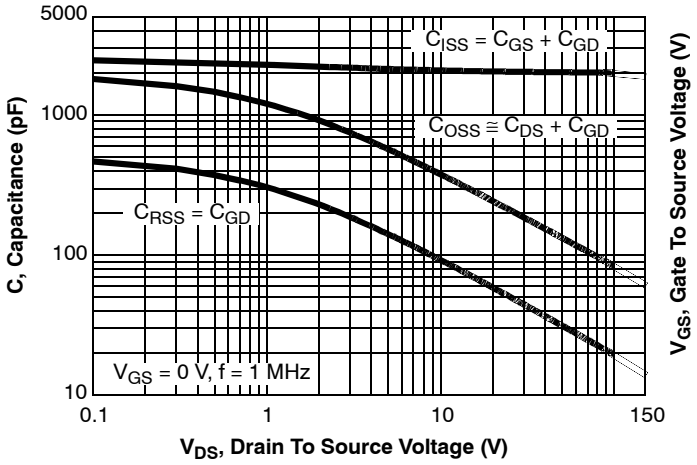


**Figure 11. Capacitance vs Drain to Source Voltage**

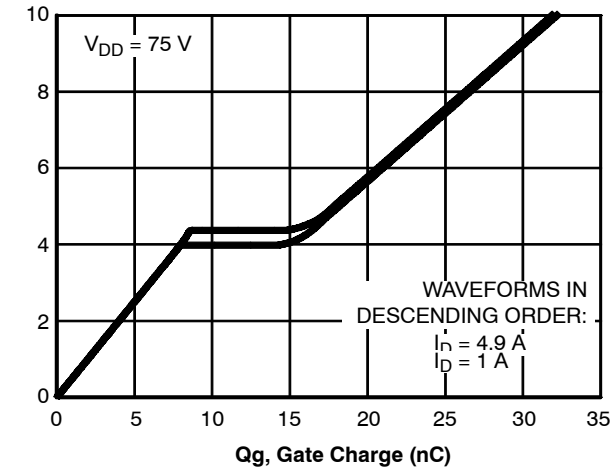


**Figure 12. Gate Charge Waveforms for Constant Gate Currents**

## TEST CIRCUITS AND WAVEFORMS

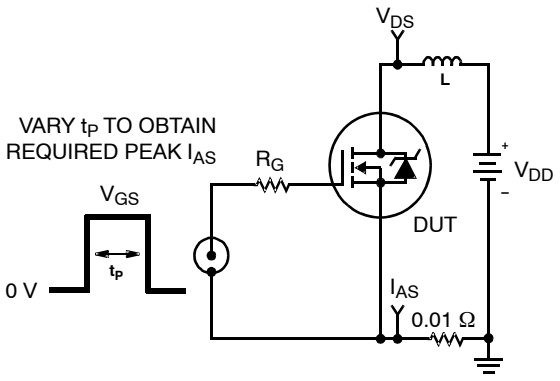


**Figure 13. Unclamped Energy Test Circuit**

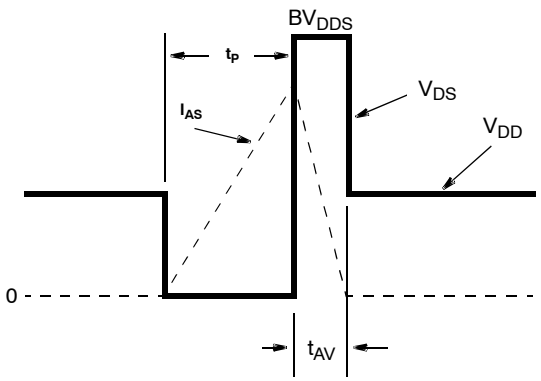


**Figure 14. Unclamped Energy Waveforms**

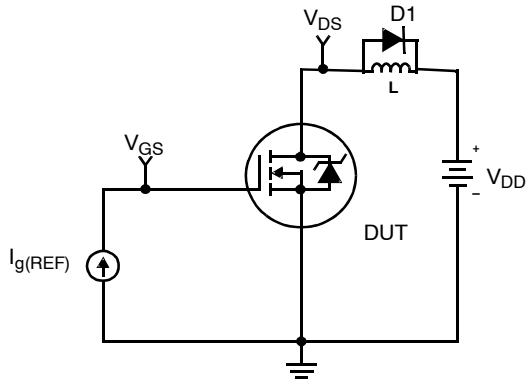


**Figure 15. Gate Charge Test Circuit**

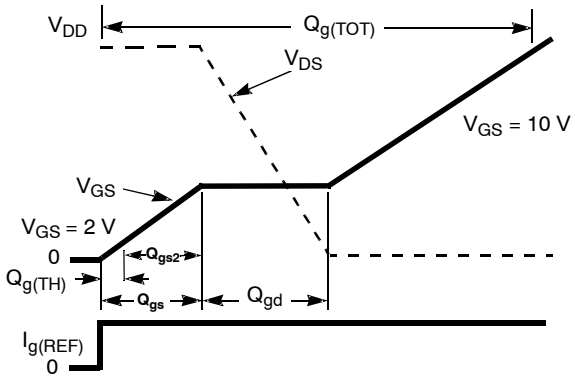


**Figure 16. Gate Charge Waveforms**

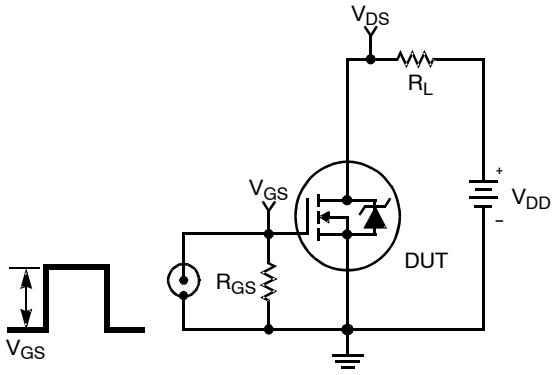


**Figure 17. Switching Time Test Circuit**

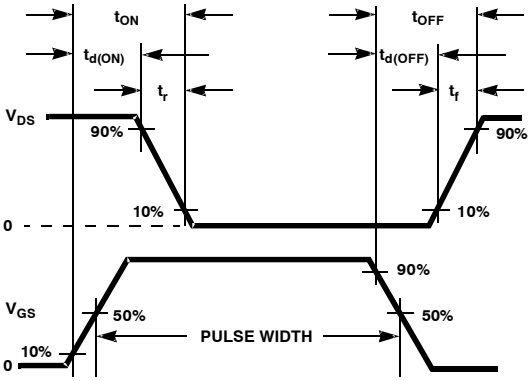


**Figure 18. Switching Time Waveforms**

## THERMAL RESISTANCE VS. MOUNTING PAD AREA

The maximum rated junction temperature, $T_{JM}$, and the Thermal Resistance of the heat Dissipating Path Determines the Maximum Allowable Device Power Dissipation, PDM, in an application. Therefore the application's ambient temperature, $T_A$ (°C), and thermal resistance $R_{\theta JA}$ (°C/W) must be reviewed to ensure that $T_{JM}$ is never exceeded. Equation 1 mathematically represents the relationship and serves as the basis for Establishing the rating of the Part.

$$P_{DM} = \frac{(T_{JM} - T_A)}{R_{\theta JA}} \quad \text{(eq.1)}$$

In using surface mount devices such as the SO8 package, the environment in which it is applied will have a significant influence on the part's current and maximum power dissipation ratings. Precise determination of PDM is complex and influenced by many factors:

1.Mounting pad area onto which the device is attached and whether there is copper on one side or both sides of the board:
2.The number of copper layers and the thickness of the board.
3.The use of external heat sinks
4.The use of external heat sinks
5.Air flow and board orientation
6..For non steady state applications, the pulse width, the duty cycle and the transient thermal response of the part, the board and the environment they are in.

**onsemi** Provides Thermal Information to assist the Designer's Preliminary Application Evaluation. Figure 19 defines the $R_{\theta JA}$ for the device as a function of the top copper (component side) area. This is for a horizontally positioned FR−4 board with 1oz copper after 1000 seconds of steady state power with no air flow. This graph provides the necessary information for calculation of the steady state junction temperature or Power Dissipation. Pulse applications can be evaluated using the Fairchild Device Spice Thermal model or manually utilizing the normalized maximum transient thermal impedance curve.

Thermal resistances corresponding to other copper areas can be obtained from Figure 19 or by calculation using Equation 2. The area, in square inches is the top copper area including the gate and source pads.

$$R_{\theta JA} = 64 + \frac{26}{0.23 + \text{Area}} \quad \text{(eq.2)}$$

The transient thermal impedance ($Z_{\theta JA}$) is also effected by varied top copper board area. Figure 20 shows the effect of copper pad area on single pulse transient thermal impedance. Each trace represents a copper pad area in square inches corresponding to the descending list in the graph. Spice and SABER thermal models are provided for each of the listed pad areas.

Copper Pad area has no perceivable effect on transient thermal impedance for pulse widths less than 100 ms. For pulse widths less than 100 ms the transient thermal impedance is determined by the die and package. Therefore, CTHERM1 through CTHERM5 and RTHERM1 through RTHERM5 remain constant for each of the thermal models. A listing of the model component values is available in Table 1.

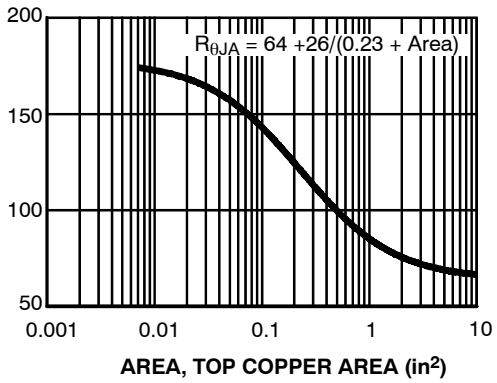


**Figure 19. Thermal Resistance vs Mounting Pad Area**

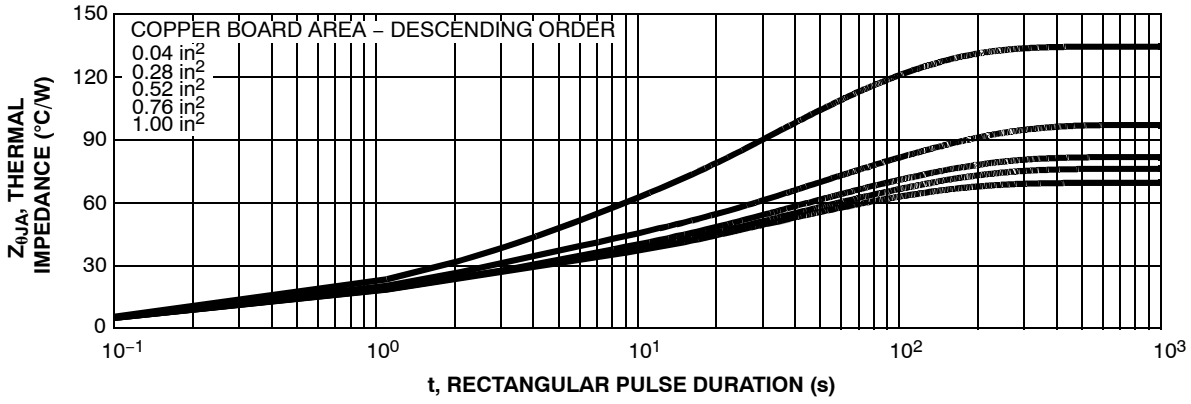


**Figure 20. Thermal Impedance vs Mounting Pad Area**

## PSPICE ELECTRICAL MODEL

```
.SUBCKT FDS2572 2 1 3 ;      Rev August 2001
CA 12 8 8e−10
Cb 15 14 8e−10
Cin 6 8 2e−9

Dbody 7 5 DbodyMOD
Dbreak 5 11 DbreakMOD
Dplcap 10 5 DplcapMOD

Ebreak 11 7 17 18 157.4
Eds 14 8 5 8 1
Egs 13 8 6 8 1
Esg 6 10 6 8 1
Evthres 6 21 19 8 1
Evtemp 20 6 18 22 1

it 8 17 1

Lgate 1 9 5.61e−9
Ldrain 2 5 1.0e−9
Lsource 3 7 1.98e−9

RLgate 1 9 56.1
RLdrain 2 5 10
RLsource 3 7 19.8

Mstro 16 6 8 8 MstroMOD
Mmed 16 6 8 8 MmedMOD
Mweak 16 21 8 8 MweakMOD

Rbreak 17 18 RbreakMOD 1
Rdrain 50 16 RdrainMOD 2.1e−2
Rgate 9 20 1.47
RSLC1 5 51 RSLCMOD 1e−6
RSLC2 5 50 1e3
Rsource 8 7 RsourceMOD 1.5e−2
Rvthres 22 8 RvthresMOD 1
Rvtemp 18 19 RvtempMOD 1
S1a 6 12 13 8 S1AMOD
S1b 13 12 13 8 S1BMOD
S2a 6 15 14 13 S2AMOD
S2b 13 15 14 13 S2BMOD

Vbat 22 19 DC 1
ESLC 51 50 VALUE = {(V(5,51)/ABS(V(5,51)))*(PWR(V(5,51)/(1e−6*65),3))}

.MODEL DbodyMOD D (IS = 4e−11 N = 1.131 RS = 4.4e−3 TRS1 = 2e−3 TRS2 = 1e−6
+ CJO = 1.44e−9 M = 0.67 TT = 7.4e−8 XTI = 4.2)
.MODEL DbreakMOD D (RS = 0.38 TRS1 = 2e−3 TRS2 = −8.9e−6)
.MODEL DplcapMOD D (CJO = 5e−10 IS = 1e−30 N = 10 M = 0.7)

.MODEL MstroMOD NMOS (VTO = 4.05 KP = 85 IS = 1e−30 N = 10 TOX = 1 L = 1u W = 1u)
.MODEL MmedMOD NMOS (VTO = 3.35 KP = 5 IS = 1e−30 N = 10 TOX = 1 L = 1u W = 1u RG = 1.47)
.MODEL MweakMOD NMOS (VTO = 2.76 KP = 0.05 IS = 1e−30 N = 10 TOX = 1 L = 1u W = 1u RG = 14.7 RS = 0.1)

.MODEL RbreakMOD RES (TC1 = 1.1e−3 TC2 = −3e−7)
.MODEL RdrainMOD RES (TC1 = 1e−2 TC2 = 3e −5)
.MODEL RSLCMOD RES (TC1 = 3e −3 TC2 = 1e −6)
.MODEL RsourceMOD RES (TC1 = 4.5e−3 TC2=1e−6)
.MODEL RvtempMOD RES (TC1 = −5e−3 TC2 = 2e−6)
.MODEL RvthresMOD RES (TC1 = −3e−3 TC2 = −1.4e−5)

.MODEL S1AMOD VSWITCH (RON=1e−5 ROFF=0.1 VON=−10 VOFF=−2)
.MODEL S1BMOD VSWITCH (RON = 1e−5 ROFF = 0.1 VON = −2 VOFF = −10)
.MODEL S2AMOD VSWITCH (RON = 1e−5 ROFF = 0.1 VON = −0.8 VOFF = 0.3)
.MODEL S2BMOD VSWITCH (RON = 1e−5 ROFF = 0.1 VON = 0.3 VOFF = −0.8)
.ENDS
```

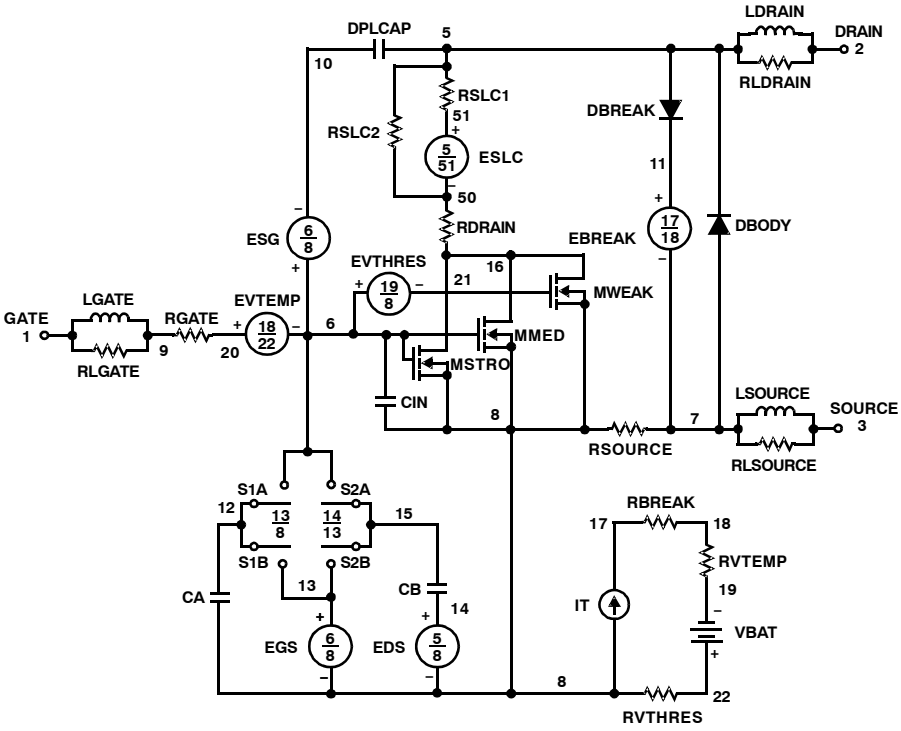


Note: For further discussion of the PSPICE model, consult A New PSPICE Sub−Circuit for the Power MOSFET Featuring Global Temperature Options; IEEE Power Electronics Specialist Conference Records, 1991, written by William J. Hepp and C. Frank Wheatley.

## SABER ELECTRICAL MODEL

```
REV August 2001
template FDS2572 n2,n1,n3
electrical n2,n1,n3
{
var i iscl
dp..model dbodymod = (isl = 4e−11,nl = 1.131,rs = 4.4e−3,trs1 = 2e−3,trs2 = 1e−6,cjo = 1.44e−9,m = 0.67,tt = 7.4e−8,xti = 4.2
dp..model dbreakmod = (rs = 0.38,trs1 = 2e−3,trs2 = −8.9e−6)
dp..model dplcapmod = (cjo = 5e−10,isl = 10e−30,nl = 10,m = 0.7)
m..model mstrongmod = (type =_n,vto = 4.05,kp = 85,is = 1e−30, tox = 1)
m..model mmedmod = (type =_n,vto = 3.35,kp = 5,is = 1e−30, tox = 1)
m..model mweakmod = (type =_n,vto = 2.76,kp = 0.05,is = 1e−30, tox = 1,rs = 0.1)
sw_vcsp..model s1amod = (ron = 1e−5,roff = 0.1,von = −10,voff = −2)
sw_vcsp..model s1bmod = (ron =1e−5,roff = 0.1,von = −2,voff = −10)
sw_vcsp..model s2amod = (ron = 1e−5,roff = 0.1,von=−0.8,voff = 0.3)
sw_vcsp..model s2bmod = (ron = 1e−5,roff = 0.1,von = 0.3,voff = −0.8)
c.ca n12 n8 = 8e −10
c.cb n15 n14 = 8e −10
c.cin n6 n8 = 2e −9

dp.dbody n7 n5 = model=dbodymod
dp.dbreak n5 n11 = model=dbreakmod
dp.dplcap n10 n5 = model=dplcapmod

spe.ebreak n11 n7 n17 n18 = 157.4
spe.eds n14 n8 n5 n8 = 1
spe.egs n13 n8 n6 n8 = 1
spe.esg n6 n10 n6 n8 = 1
spe.evthres n6 n21 n19 n8 = 1
spe.evtemp n20 n6 n18 n22 = 1

i.it n8 n17 = 1

l.lgate n1 n9 = 5.61 e−9
l.ldrain n2 n5 = 1.0 e−9
l.lsource n3 n7 = 1.98 e−9

res.rlgate n1 n9 = 56.1
res.rldrain n2 n5 = 10
res.rlsource n3 n7 = 19.8

m.mstrong n16 n6 n8 n8 = model = mstrongmod, l=1u, w=1 u
m.mmed n16 n6 n8 n8 = model = mmedmod, l = 1u, w = 1 u
m.mweak n16 n21 n8 n8 = model = mweakmod, l = 1u, w = 1 u

res.rbreak n17 n18 = 1, tc1 = 1.1e−3,tc2 = −3e−7
res.rdrain n50 n16 = 2.1e−2, tc1 = 1e−2,tc2 = 3e −5
res.rgate n9 n20 = 1.47
res.rslc1 n5 n51 = 1e−6, tc1 = 3e−3,tc2 =1e −6
res.rslc2 n5 n50 = 1e3
res.rsource n8 n7 = 1.5e−2, tc1=4.5e−3,tc2=1e−6
res.rvthres n22 n8 = 1, tc1 = −3e−3,tc2 = −1.4e−5
res.rvtemp n18 n19 = 1, tc1 = −5e−3,tc2 = 2e−6
sw_vcsp.s1a n6 n12 n13 n8 = model = s1amod
sw_vcsp.s1b n13 n12 n13 n8 = model = s1bmod
sw_vcsp.s2a n6 n15 n14 n13 = model = s2amod
sw_vcsp.s2b n13 n15 n14 n13 = model = s2bmod


v.vbat n22 n19 = dc = 1
equations {
i (n51−>n50) + = iscl
iscl: v(n51,n50) = ((v(n5,n51)/(1e−9+abs(v(n5,n51))))*((abs(v(n5,n51)*1e6/65))** 3))
}
```

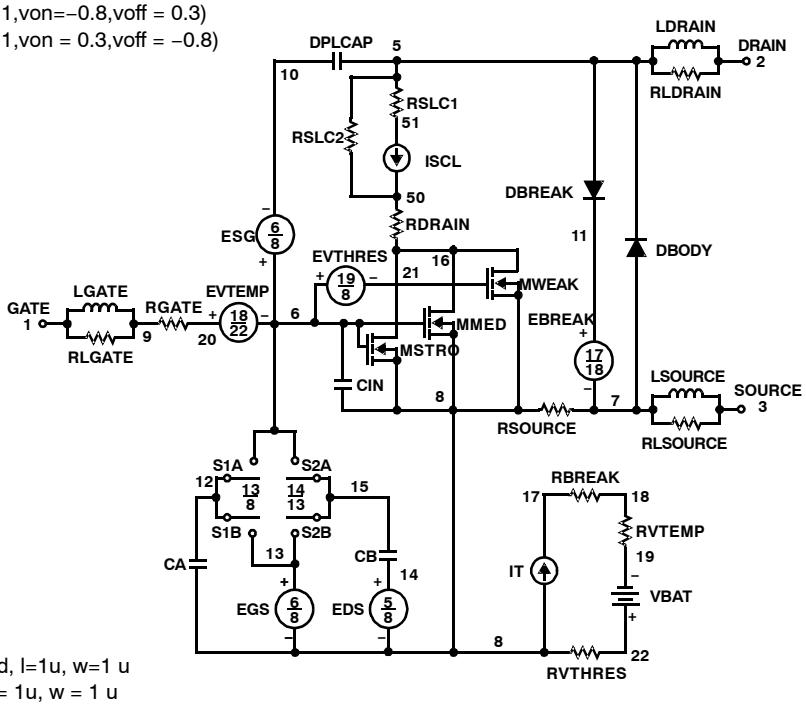

## SPICE THERMAL MODEL

REV August 2001
FDS2572
Copper Area = 1 $in^2$

CTHERM1 TH 8 2.0 e−3 CTHERM2 8 7 5.0 e−3
CTHERM3 7 6 1.0 e−2
CTHERM4 6 5 4.0 e−2
CTHERM5 5 4 9.0 e−2
CTHERM6 4 3 2.0 e−1
CTHERM7 3 2 1
CTHERM8 2 TL 3

RTHERM1 TH 8 1.0 e−1 RTHERM2 8 7 5.0 e−1
RTHERM3 7 6 1
RTHERM4 6 5 5
RTHERM5 5 4 8
RTHERM6 4 3 12
RTHERM7 3 2 18
RTHERM8 2 TL 25

## SABER THERMAL MODEL

Copper Area = 1 $in^2$
template thermal_model th tl
thermal_c th, tl
{
ctherm.ctherm1 th c2 = 2.0 e−3
ctherm.ctherm2 c2 c3 = 5.0 e−3
ctherm.ctherm3 c3 c4 = 1.0 e−2
ctherm.ctherm4 c4 c5 = 4.0 e−2
ctherm.ctherm5 c5 c6 = 9.0 e−2
ctherm.ctherm6 c6 c7 = 2.0 e−1
ctherm.ctherm7 c7 c8 = 1
ctherm.ctherm8 c8 tl = 3

rtherm.rtherm1 th c2 = 1.0 e−1
rtherm.rtherm2 c2 c3 = 5.0 e−1
rtherm.rtherm3 c3 c4 = 1
rtherm.rtherm4 c4 c5 = 5
rtherm.rtherm5 c5 c6 = 8
rtherm.rtherm6 c6 c7 = 12
rtherm.rtherm7 c7 c8 = 18
rtherm.rtherm8 c8 tl = 25
}

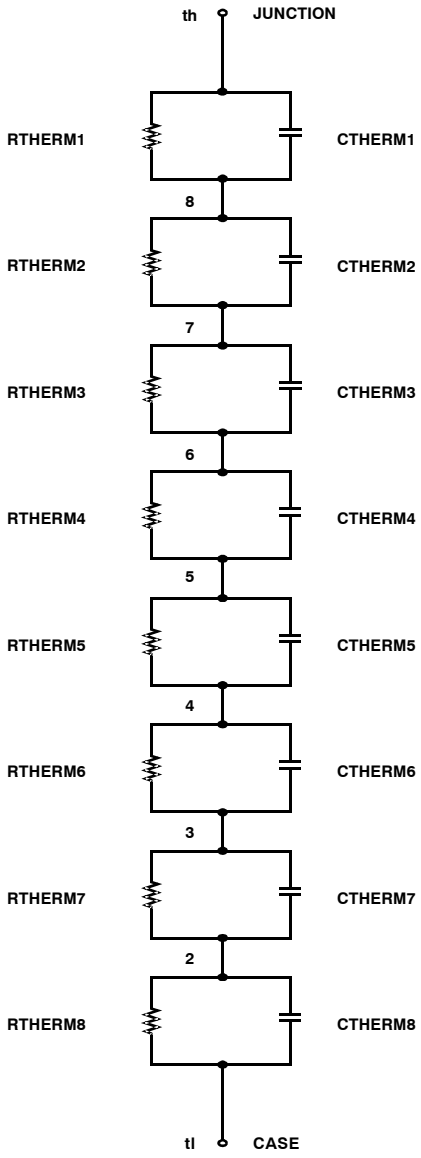


### TABLE 1. THERMAL MODELS

| COMPONANT | 0.04 $in^2$ | 0.28 $in^2$ | 0.52 $in^2$ | 0.76 $in^2$ | 1.0 $in^2$ |
|---|---|---|---|---|---|
| CTHERM6 | 1.2e−1 | 1.5e−1 | 2.0e−1 | 2.0e−1 | 2.0e−1 |
| CTHERM7 | 0.5 | 1.0 | 1.0 | 1.0 | 1.0 |
| CTHERM8 | 1.3 | 2.8 | 3.0 | 3.0 | 3.0 |
| RTHERM6 | 26 | 20 | 15 | 13 | 12 |
| RTHERM7 | 39 | 24 | 21 | 19 | 18 |
| RTHERM8 | 55 | 38.7 | 31.3 | 29.7 | 25 |

**SOIC8**
CASE 751EB
ISSUE A

DATE 24 AUG 2017

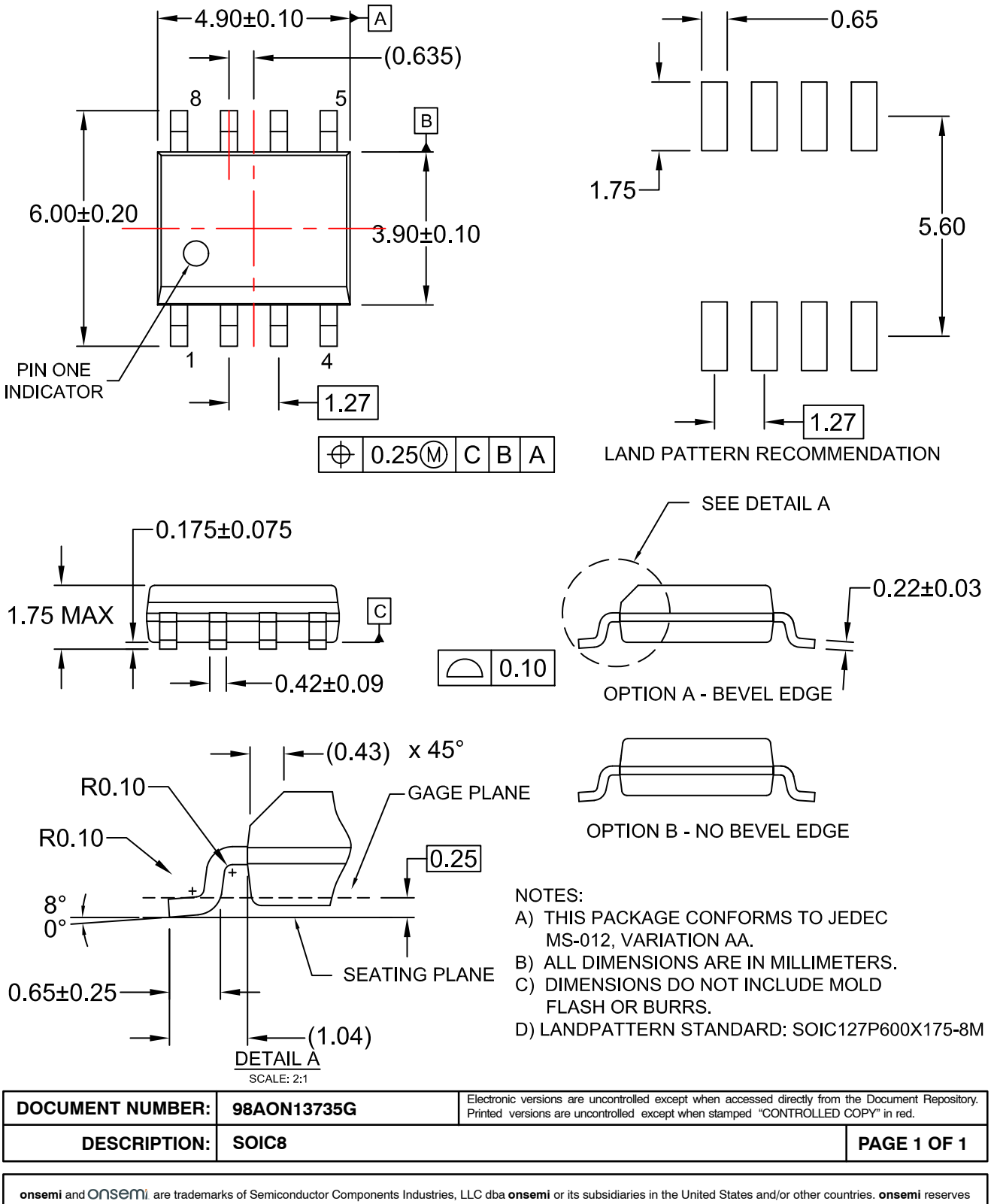


NOTES:
A) THIS PACKAGE CONFORMS TO JEDEC MS-012, VARIATION AA.
B) ALL DIMENSIONS ARE IN MILLIMETERS.
C) DIMENSIONS DO NOT INCLUDE MOLD FLASH OR BURRS.
D) LANDPATTERN STANDARD: SOIC127P600X175-8M

| | | |
|---|---|---|
| **DOCUMENT NUMBER:** | **98AON13735G** | Electronic versions are uncontrolled except when accessed directly from the Document Repository. Printed versions are uncontrolled except when stamped "CONTROLLED COPY" in red. |
| **DESCRIPTION:** | **SOIC8** | **PAGE 1 OF 1** |

**onsemi** and onsemi are trademarks of Semiconductor Components Industries, LLC dba **onsemi** or its subsidiaries in the United States and/or other countries. **onsemi** reserves the right to make changes without further notice to any products herein. **onsemi** makes no warranty, representation or guarantee regarding the suitability of its products for any particular purpose, nor does **onsemi** assume any liability arising out of the application or use of any product or circuit, and specifically disclaims any and all liability, including without limitation special, consequential or incidental damages. **onsemi** does not convey any license under its patent rights nor the rights of others.

**onsemi**, , and other names, marks, and brands are registered and/or common law trademarks of Semiconductor Components Industries, LLC dba "**onsemi**" or its affiliates and/or subsidiaries in the United States and/or other countries. **onsemi** owns the rights to a number of patents, trademarks, copyrights, trade secrets, and other intellectual property. A listing of **onsemi**'s product/patent coverage may be accessed at www.onsemi.com/site/pdf/Patent−Marking.pdf. **onsemi** reserves the right to make changes at any time to any products or information herein, without notice. The information herein is provided "as−is" and **onsemi** makes no warranty, representation or guarantee regarding the accuracy of the information, product features, availability, functionality, or suitability of its products for any particular purpose, nor does **onsemi** assume any liability arising out of the application or use of any product or circuit, and specifically disclaims any and all liability, including without limitation special, consequential or incidental damages. Buyer is responsible for its products and applications using **onsemi** products, including compliance with all laws, regulations and safety requirements or standards, regardless of any support or applications information provided by **onsemi**. "Typical" parameters which may be provided in **onsemi** data sheets and/or specifications can and do vary in different applications and actual performance may vary over time. All operating parameters, including "Typicals" must be validated for each customer application by customer's technical experts. **onsemi** does not convey any license under any of its intellectual property rights nor the rights of others. **onsemi** products are not designed, intended, or authorized for use as a critical component in life support systems or any FDA Class 3 medical devices or medical devices with a same or similar classification in a foreign jurisdiction or any devices intended for implantation in the human body. Should Buyer purchase or use **onsemi** products for any such unintended or unauthorized application, Buyer shall indemnify and hold **onsemi** and its officers, employees, subsidiaries, affiliates, and distributors harmless against all claims, costs, damages, and expenses, and reasonable attorney fees arising out of, directly or indirectly, any claim of personal injury or death associated with such unintended or unauthorized use, even if such claim alleges that **onsemi** was negligent regarding the design or manufacture of the part. **onsemi** is an Equal Opportunity/Affirmative Action Employer. This literature is subject to all applicable copyright laws and is not for resale in any manner.

## ADDITIONAL INFORMATION

**TECHNICAL PUBLICATIONS**:
**Technical Library:** www.onsemi.com/design/resources/technical−documentation
**onsemi Website:** www.onsemi.com

**ONLINE SUPPORT**: www.onsemi.com/support
**For additional information, please contact your local Sales Representative at** www.onsemi.com/support/sales