High-Speed 10 MBit/s Logic Gate Optocouplers

Single-Channel: 6N137, HCPL2601, HCPL2611 Dual-Channel: HCPL2630, HCPL2631

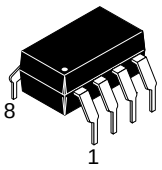

PDIP8 6.6x3.81, 2.54P
CASE 646BW

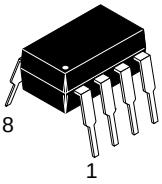

PDIP8 9.655x6.6, 2.54P
CASE 646CQ

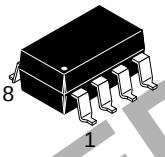

PDIP8 GW
CASE 709AC

DISCONTINUED
THIS DEVICE IS NOT RECOMMENDED FOR NEW DESIGN
PLEASE CONTACT YOUR onsemi
REPRESENTATIVE FOR INFORMATION

Description

The 6N137, HCPL2601, HCPL2611 single−channel and HCPL2630, HCPL2631 dual−channel optocouplers consist of a 850 nm AlGaAS LED, optically coupled to a very high speed integrated photo−detector logic gate with a strobable output. This output features an open collector, thereby permitting wired OR outputs. The coupled parameters are guaranteed over the temperature range of −40°C to +85°C. A maximum input signal of 5 mA will provide a minimum output sink current of 13 mA (fan out of 8).

An internal noise shield provides superior common mode rejection of typically 10 kV/µs. The HCPL2601 and HCPL2631 has a minimum CMR of 5 kV/µs. The HCPL2611 has a minimum CMR of 10 kV/µs.

Features

- Very High Speed – 10 MBit/s
- Superior CMR – 10 kV/µs
- Double working voltage − 480 V
- Fan−out of 8 Over −40°C to +85°C
- Logic Gate Output
- Strobable Output
- Wired OR−open Collector
- U.L. Recognized (File # E90700)

Applications

- Ground Loop Elimination
- LSTTL to TTL, LSTTL or 5−volt CMOS
- Line Receiver, Data Transmission
- Data Multiplexing
- Switching Power Supplies
- Pulse Transformer Replacement
- Computer−peripheral Interface

MARKING DIAGRAM

2601	= Device Number
V	= VDE mark (Note: Only Appears on Parts Ordered with VDE Option – See Order Entry Table)
XX	= Two−Digit Year Code, e.g., ‘03’
YY	= Two−Digit Work Week, Ranging from ‘01’ to ‘53’
T1	= Assembly Package Code

ORDERING INFORMATION

See detailed ordering and shipping information on page 10 of this data sheet.

© Semiconductor Components Industries, LLC, 2005

SCHEMATICS

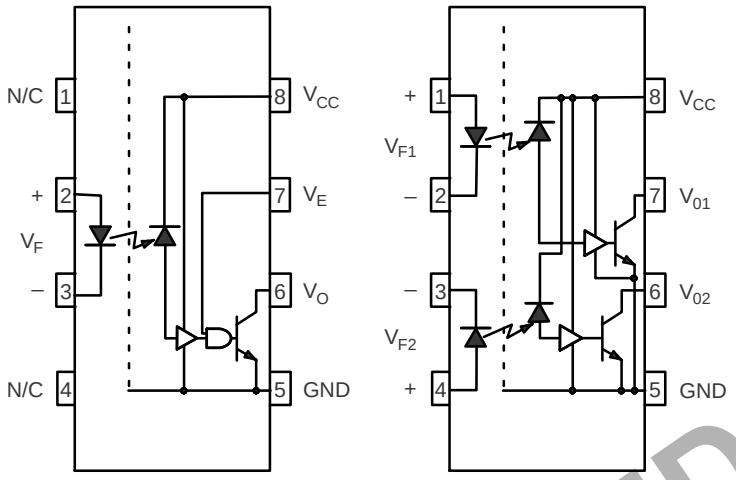

6N137, HCPL2601, HCPL2611

HCPL2630, HCPL2631

A 0.1 μF bypass capacitor must be connected between pins 8 and 5 (Note 1).

Figure 1. Schematics

TRUTH TABLE (Positive Logic)

Input	Enable	Output
H	H	L
L	H	H
H	L	H
L	L	H
H	NC	L
L	NC	H

DISCONTINUED
THIS DEVICE IS NOT RECOMMENDED FOR NEW DESIGN
PLEASE CONTACT YOUR onsemi
REPRESENTATIVE FOR INFORMATION

ABSOLUTE MAXIMUM RATINGS (T_A = 25°C unless otherwise noted)

Symbol	Parameter		Value	Unit
T_{STG}	Storage Temperature		−55 to +125	°C
T_{OPR}	Operating Temperature		−40 to +85	°C
T_{SOL}	Lead Solder Temperature (for Wave Soldering Only)*		260 for 10 s	°C
EMITTER				
I_F	DC/Average Forward Input Current	Single Channel	50	mA
		Dual Channel (Each Channel)	30	
V_E	Enable Input Voltage Not to Exceed V_{CC} by More than 500 mV	Single Channel	5.5	V
V_R	Reverse Input Voltage	Each Channel	5.0	V
P_I	Power Dissipation	Single Channel	100	mW
		Dual Channel (Each Channel)	45	
DETECTOR				
V_{CC} (1 Minute Max)	Supply Voltage		7.0	V
I_O	Output Current	Single Channel	25	mA
		Dual Channel (Each Channel)	50	mA
V_O	Output Voltage	Each Channel	7.0	V
P_O	Collector Output Power Dissipation	Single Channel	85	mW
		Dual Channel (Each Channel)	60	

Stresses exceeding those listed in the Maximum Ratings table may damage the device. If any of these limits are exceeded, device functionality should not be assumed, damage may occur and reliability may be affected.
*For peak soldering reflow, please refer to the Reflow Profile on page 9.

RECOMMENDED OPERATING CONDITIONS

Symbol	Parameter	Min	Max	Unit
I_{FL}	Input Current, Low Level	0	250	μA
I_{FH}	Input Current, High Level	*6.3	15	mA
V_{CC}	Supply Voltage, Output	4.5	5.5	V
V_{EL}	Enable Voltage, Low Level	0	0.8	V
V_{EH}	Enable Voltage, High Level	2.0	V_{CC}	V
T_A	Low Level Supply Current	−40	+85	°C
N	Fan Out (TTL Load)	−	8	

Functional operation above the stresses listed in the Recommended Operating Ranges is not implied. Extended exposure to stresses beyond the Recommended Operating Ranges limits may affect device reliability.
*6.3 mA is a guard banded value which allows for at least 20% CTR degradation. Initial input current threshold value is 5.0 mA or less.

DISCONTINUED
THIS DEVICE IS NOT RECOMMENDED FOR NEW DESIGN
PLEASE CONTACT YOUR onsemi
REPRESENTATIVE FOR INFORMATION

ELECTRICAL CHARACTERISTICS (T_A = 0°C to 70°C unless otherwise specified)

Symbol	Parameter	Test Conditions		Min	Typ	Max	Unit
INDIVIDUAL COMPONENT CHARACTERISTICS							
EMITTER							
V_F	Input Forward Voltage	I_F = 10 mA		–	–	1.8	V
			T_A = 25°C	–	1.4	1.75	
B_{VR}	Input Reverse Breakdown Voltage	I_R = 10 μA		5.0	–	–	V
C_{IN}	Input Capacitance	V_F = 0, f = 1 MHz		–	60	–	pF
$\Delta V_F / \Delta T_A$	Input Diode Temperature Coefficient	I_F = 10 mA		–	−1.4	–	mV/°C
DETECTOR							
I_{CCH}	High Level Supply Current	V_{CC} = 5.5 V, I_F = 0 mA, V_E = 0.5 V	Single Channel	–	7	10	mA
			Dual Channel	–	10	15	
I_{CCL}	Low Level Supply Current	Single Channel	V_{CC} = 5.5 V, I_F = 10 mA	–	9	13	mA
		Dual Channel	V_E = 0.5 V	–	14	21	
I_{EL}	Low Level Enable Current	V_{CC} = 5.5 V, V_E = 0.5 V		–	−0.8	−1.6	mA
I_{EH}	High Level Enable Current	V_{CC} = 5.5 V, V_E = 2.0 V		–	−0.6	−1.6	mA
V_{EH}	High Level Enable Voltage	V_{CC} = 5.5 V, I_F = 10 mA		2.0	–	–	V
V_{EL}	Low Level Enable Voltage	V_{CC} = 5.5 V, I_F = 10 mA (Note 3)		–	–	0.8	V

SWITCHING CHARACTERISTICS (T_A = −40°C to +85°C, V_{CC} = 5 V, I_F = 7.5 mA unless otherwise specified)

T_{PLH}	Propagation Delay Time to Output HIGH Level	R_L = 350 Ω, C_L = 15 pF (Note 4) (Figure 13)	T_A = 25°C	20	45	75	ns
				–	–	100	
T_{PHL}	Propagation Delay Time to Output LOW Level	T_A = 25°C (Note 5)		25	45	75	ns
		R_L = 350 Ω, C_L = 15 pF (Figure 13)		–	–	100	
$\|T_{PHL}–T_{PLH}\|$	Pulse Width Distortion	R_L = 350 Ω, C_L = 15 pF (Figure 13)		–	3	35	ns
t_r	Output Rise Time (10–90%)	R_L = 350 Ω, C_L = 15 pF (Note 6) (Figure 13)		–	50	–	ns
t_f	Output Rise Time (90–10%)	R_L = 350 Ω, C_L = 15 pF (Note 7) (Figure 13)		–	12	–	ns
t_{ELH}	Enable Propagation Delay Time to Output HIGH Level	I_F = 7.5 mA, V_{EH} = 3.5 V, R_L = 350 Ω, C_L = 15 pF (Note 8) (Figure 14)		–	20	–	ns
t_{EHL}	Enable Propagation Delay Time to Output LOW Level	I_F = 7.5 mA, V_{EH} = 3.5 V, R_L = 350 Ω, C_L = 15pF (Note 9) (Figure 14)		–	20	–	ns
$\|CM_H\|$	Common Mode Transient Immunity (at Output HIGH Level)	T_A = 25°C, $\|V_{CM}\|$ = 50 V (Peak), I_F = 0 mA, V_{OH} (Min.) = 2.0 V, R_L = 350 Ω (Note 10) (Figure 15)	6N137, HCPL2630	–	10,000	–	V/μs
			HCPL2601, HCPL2631	5000	10,000	–	
		$\|V_{CM}\|$ = 400 V	HCPL2611	10,000	15,000	–	V/μs
$\|CM_L\|$	Common Mode Transient Immunity (at Output LOW Level)	R_L = 350 Ω, I_F = 7.5 mA, V_{OL} (Max.) = 0.8 V, T_A = 25°C (Note 11) (Figure 15)	6N137, HCPL2630	–	10,000	–	
			HCPL2601, HCPL2631	5000	10,000	–	
		$\|V_{CM}\|$ = 400 V	HCPL2611	10,000	15,000	–	

TRANSFER CHARACTERISTICS (T_A = −40°C to +85°C unless otherwise specified)

I_{OH}	HIGH Level Output Current	V_{CC} = 5.5 V, V_O = 5.5 V, I_F = 250 μA, V_E = 2.0V (Note 2)	–	–	100	μA
V_{OL}	LOW Level Output Current	V_{CC} = 5.5 V, I_F = 5 mA, V_E = 2.0 V, I_{CL} = 13 mA (Note 2)	–	.35	0.6	V
I_{FT}	Input Threshold Current	V_{CC} = 5.5 V, V_O = 0.6 V, V_E = 2.0 V, I_{OL} = 13 mA	–	3	5	mA

DISCONTINUED
THIS DEVICE IS NOT RECOMMENDED FOR NEW DESIGN
PLEASE CONTACT YOUR onsemi
REPRESENTATIVE FOR INFORMATION

ELECTRICAL CHARACTERISTICS (T_A = 0°C to 70°C unless otherwise specified) (continued)

Symbol	Parameter	Test Conditions	Min	Typ	Max	Unit
ISOLATION CHARACTERISTICS (T_A = −40°C to +85°C unless otherwise specified)						
I_{I-O}	Input−Output Insulation Leakage Current	Relative Humidity = 45%, T_A = 25°C, t = 5 s, V_{I-O} = 3000 VDC (Note 12)	−	−	1.0*	μA
V_{ISO}	Withstand Insulation Test Voltage	RH < 50%, T_A = 25°C, $I_{I-O} \leq 2$ μA, t = 1 min. (Note 12)	2500	−	−	V_{RMS}
R_{I-O}	Resistance (Input to Output)	V_{I-O} = 500 V (Note 12)	−	10^{12}	−	Ω
C_{I-O}	Capacitance (Input to Output)	f = 1 MHz (Note 12)	−	0.6	−	pF

Product parametric performance is indicated in the Electrical Characteristics for the listed test conditions, unless otherwise noted. Product performance may not be indicated by the Electrical Characteristics if operated under different conditions.

*All Typicals at V_{CC} = 5 V, T_A = 25°C

1. The V_{CC} supply to each optoisolator must be bypassed by a 0.1 μF capacitor or larger. This can be either a ceramic or solid tantalum capacitor with good high frequency characteristic and should be connected as close as possible to the package V_{CC} and GND pins of each device.
2. Each channel.
3. Enable Input – No pull up resistor required as the device has an internal pull up resistor.
4. t_{PLH} – Propagation delay is measured from the 3.75 mA level on the HIGH to LOW transition of the input current pulse to the 1.5 V level on the LOW to HIGH transition of the output voltage pulse.
5. t_{PHL} – Propagation delay is measured from the 3.75 mA level on the LOW to HIGH transition of the input current pulse to the 1.5 V level on the HIGH to LOW transition of the output voltage pulse.
6. t_r – Rise time is measured from the 10% to the 90% levels on the LOW to HIGH transition of the output pulse.
7. t_f – Fall time is measured from the 90% to the 10% levels on the HIGH to LOW transition of the output pulse.
8. t_{ELH} – Enable input propagation delay is measured from the 1.5 V level on the HIGH to LOW transition of the input voltage pulse to the 1.5 V level on the LOW to HIGH transition of the output voltage pulse.
9. t_{EHL} – Enable input propagation delay is measured from the 1.5 V level on the LOW to HIGH transition of the input voltage pulse to the 1.5 V level on the HIGH to LOW transition of the output voltage pulse.
10. CM_H – The maximum tolerable rate of rise of the common mode voltage to ensure the output will remain in the HIGH state (i.e., V_{OUT} > 2.0 V). Measured in volts per microsecond (V/μs).
11. CM_L – The maximum tolerable rate of rise of the common mode voltage to ensure the output will remain in the LOW output state (i.e., V_{OUT} < 0.8 V). Measured in volts per microsecond (V/μs).
12. Device considered a two−terminal device: Pins 1, 2, 3 and 4 shorted together, and Pins 5, 6, 7 and 8 shorted together.

DISCONTINUED
THIS DEVICE IS NOT RECOMMENDED FOR NEW DESIGN
PLEASE CONTACT YOUR onsemi
REPRESENTATIVE FOR INFORMATION

TYPICAL PERFORMANCE CURVES

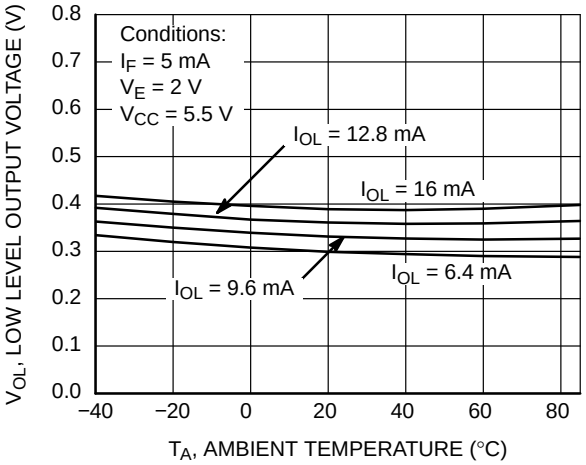

Figure 2. Low Level Output Voltage vs. Ambient Temperature

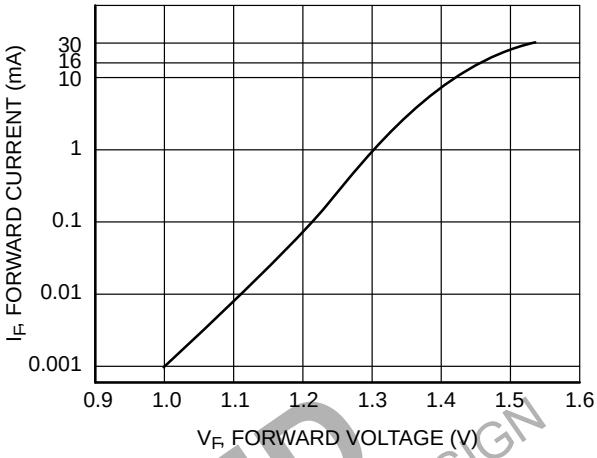

Figure 3. Input Diode Forward Voltage vs. Forward Current

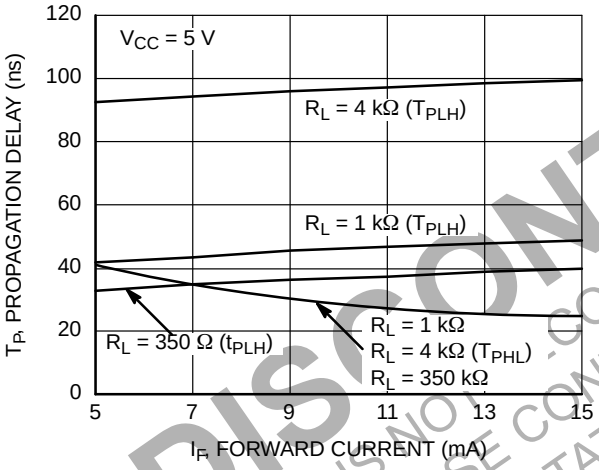

Figure 4. Switching Time vs. Forward Current

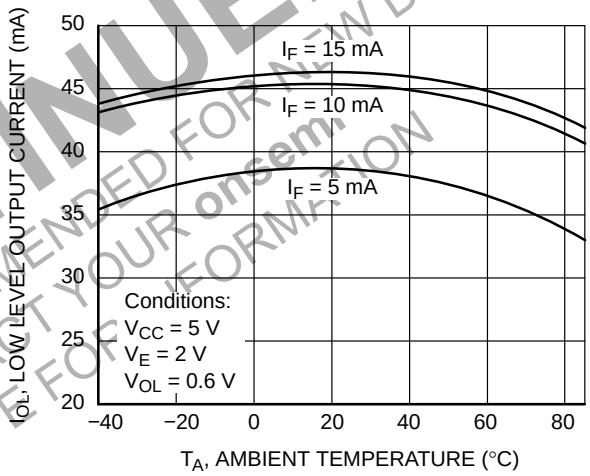

Figure 5. Low Level Output vs. Ambient Temperature

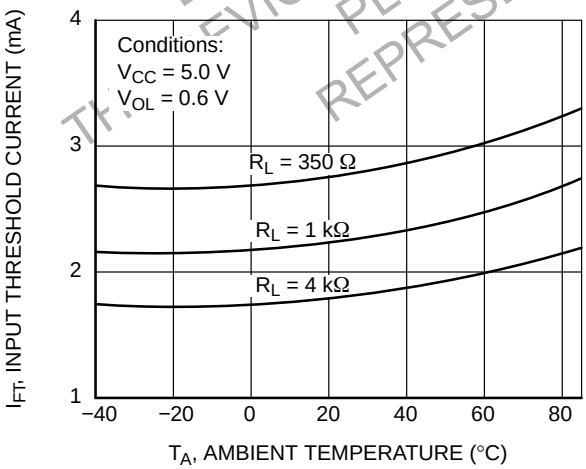

Figure 6. Input Threshold Current vs. Ambient Temperature

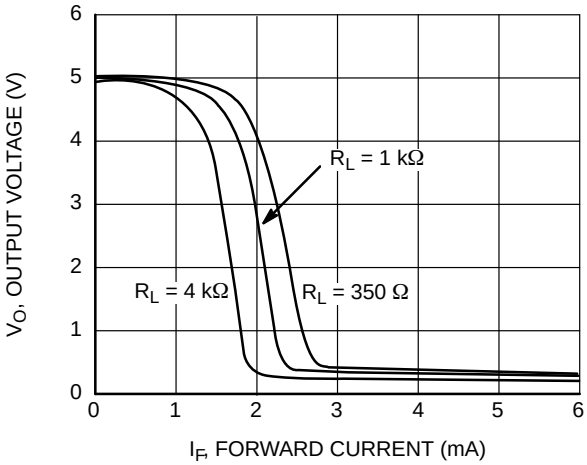

Figure 7. Output Voltage vs. Input Forward Current

DISCONTINUED
THIS DEVICE IS NOT RECOMMENDED FOR NEW DESIGN
PLEASE CONTACT YOUR onsemi
REPRESENTATIVE FOR INFORMATION

TYPICAL PERFORMANCE CURVES (Continued)

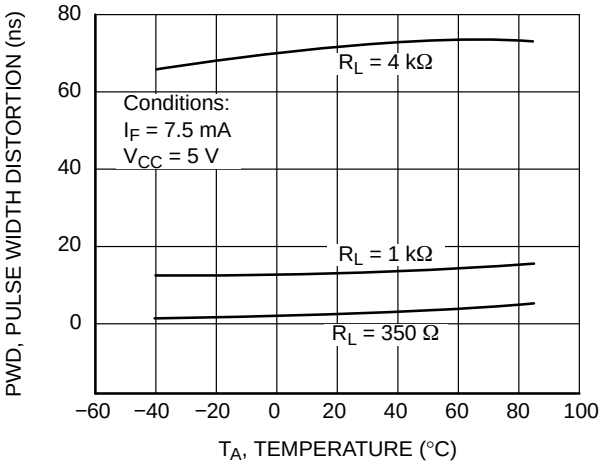

Figure 8. Pulse Width Distortion vs. Temperature

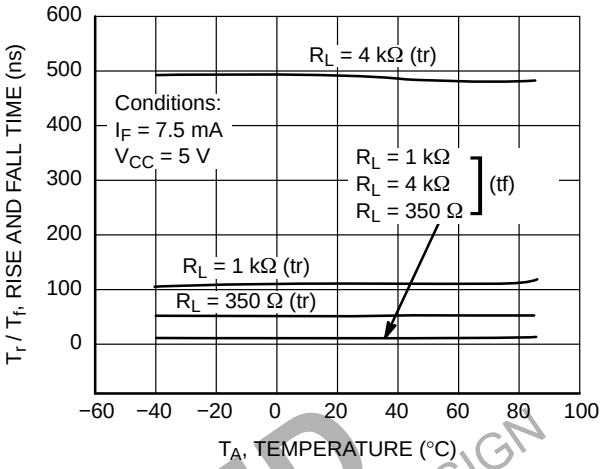

Figure 9. Rise and Fall Time vs. Temperature

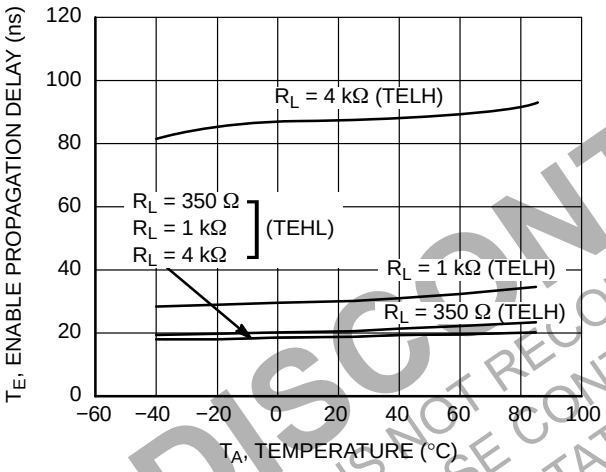

Figure 10. Enable Propagation Delay vs. Temperature

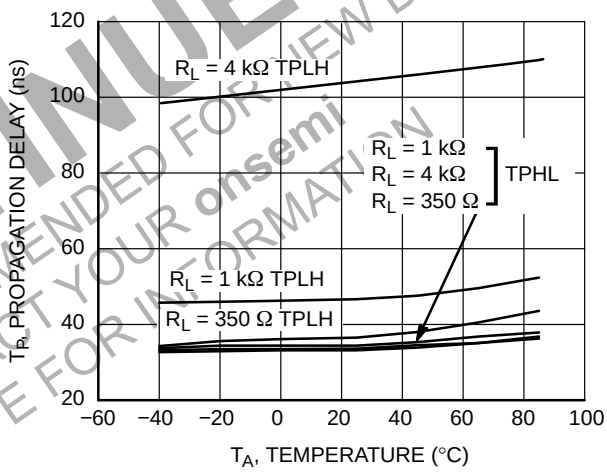

Figure 11. Switching Time vs. Temperature

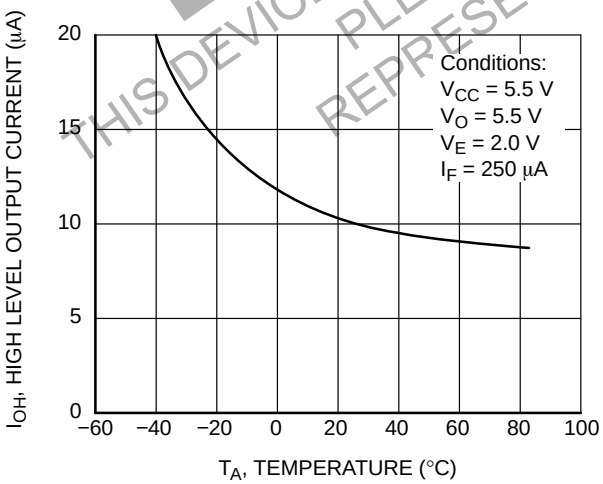

Figure 12. High Level Output Current vs. Temperature

DISCONTINUED
THIS DEVICE IS NOT RECOMMENDED FOR NEW DESIGN
PLEASE CONTACT YOUR onsemi
REPRESENTATIVE FOR INFORMATION

TEST CIRCUITS

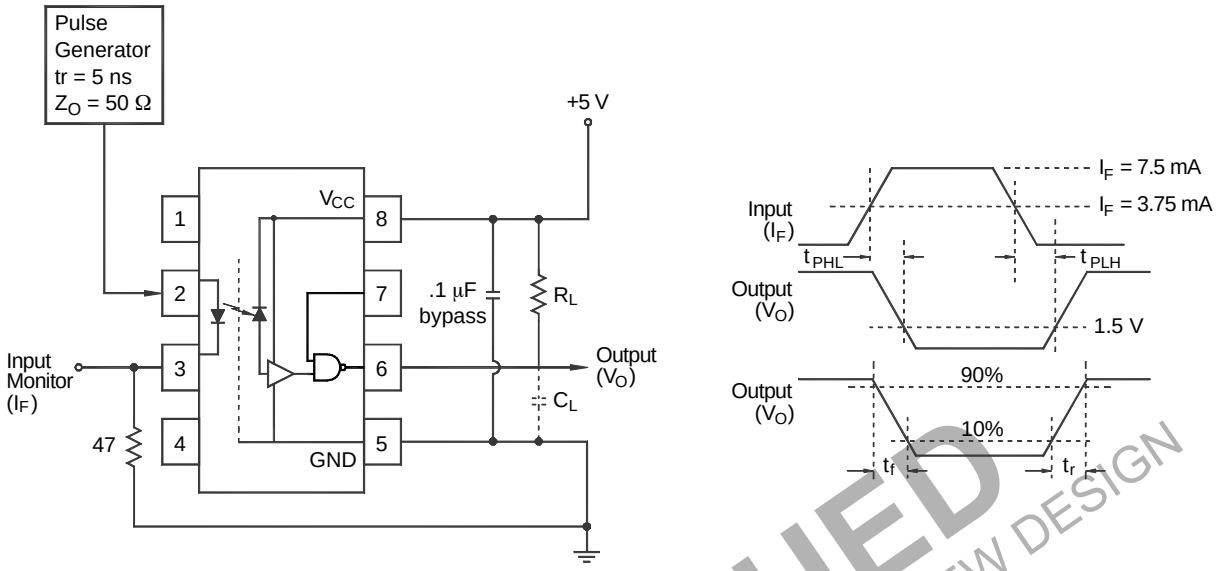

Figure 13. Test Circuit and Waveforms for t_{PLH}, t_{PHL}, t_r and t_f

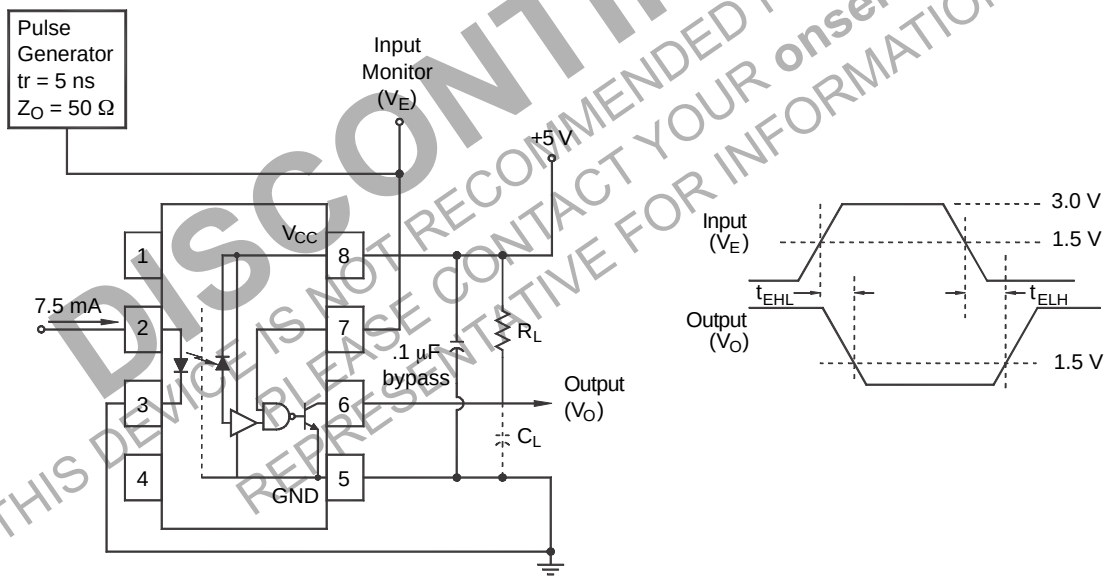

Figure 14. Test Circuit t_{EHL} and t_{ELH}

DISCONTINUED
THIS DEVICE IS NOT RECOMMENDED FOR NEW DESIGN
PLEASE CONTACT YOUR onsemi
REPRESENTATIVE FOR INFORMATION

TEST CIRCUITS (Continued)

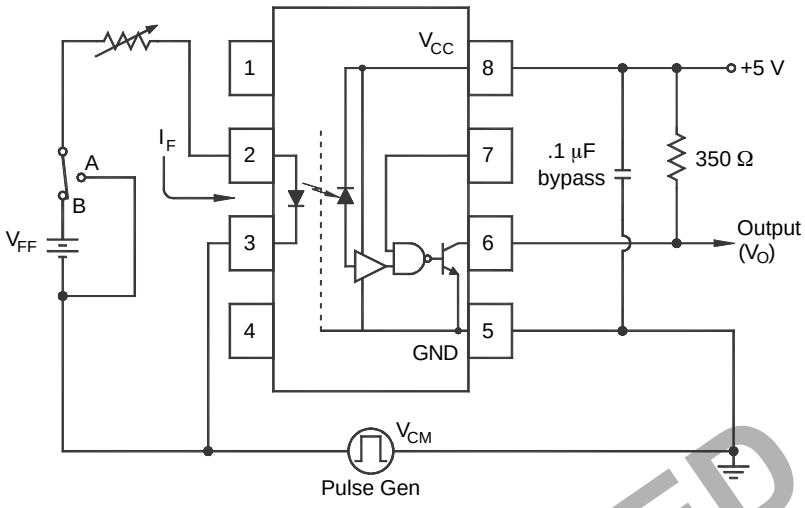

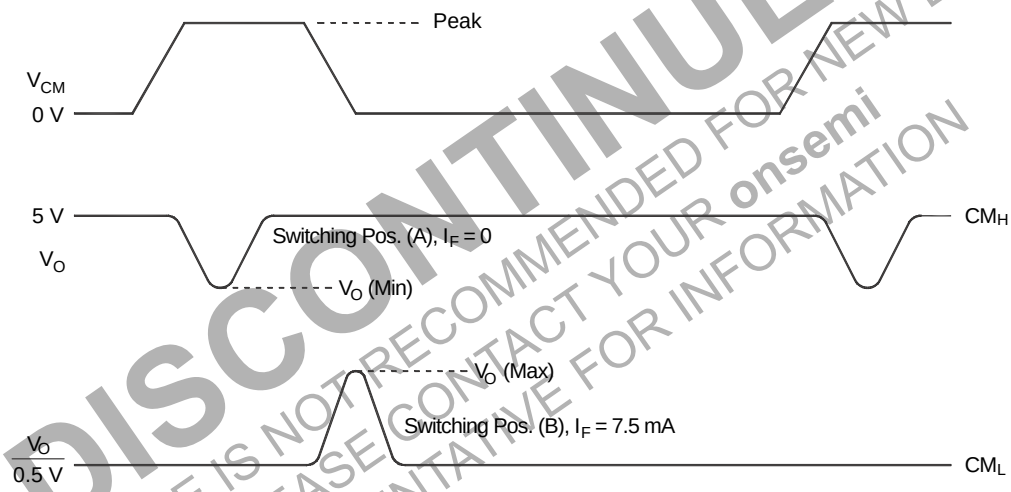

Figure 15. Test Circuit Common Mode Transient Immunity

DISCONTINUED
THIS DEVICE IS NOT RECOMMENDED FOR NEW DESIGN
PLEASE CONTACT YOUR onsemi
REPRESENTATIVE FOR INFORMATION

REFLOW PROFILE

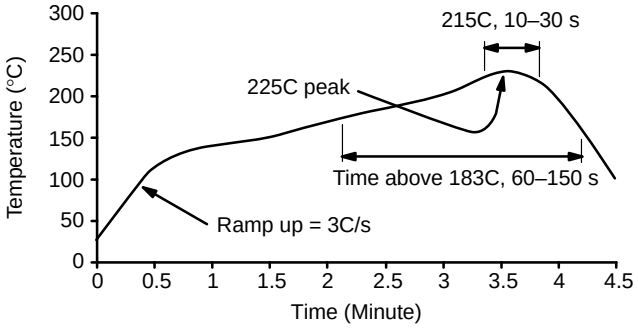

- Peak reflow temperature: 225C (package surface temperature)
- Time of temperature higher than 183C for 60–150 seconds
- One time soldering reflow is recommended

Figure 16. Reflow Profile

ORDERING INFORMATION

Option	Example Part Number	Description†
S	6N137S	PDIP8 GW, CASE 709AC Surface Mount Lead Bend
SD	6N137SD	PDIP8 GW, CASE 709AC Surface Mount; Tape and Reel
W	6N137W	PDIP8 6.6x3.81, 2.54P, CASE 646BW 0.4” Lead Spacing
V	6N137V	PDIP8 9.655x6.6, 2.54P, CASE 646CQ VDE0884
WV	6N137WV	PDIP8 6.6x3.81, 2.54P, CASE 646BW VDE0884; 0.4” Lead Spacing
SV	6N137SV	PDIP8 GW, CASE 709AC VDE0884; Surface Mount
SDV	6N137SDV	PDIP8 GW, CASE 709AC VDE0884; Surface Mount; Tape and Reel

†For information on tape and reel specifications, including part orientation and tape sizes, please refer to our Tape and Reel Packaging Specifications Brochure, BRD8011/D.

DISCONTINUED
THIS DEVICE IS NOT RECOMMENDED FOR NEW DESIGN
PLEASE CONTACT YOUR onsemi
REPRESENTATIVE FOR INFORMATION

PDIP8 6.6x3.81, 2.54P
CASE 646BW
ISSUE O

DATE 31 JUL 2016

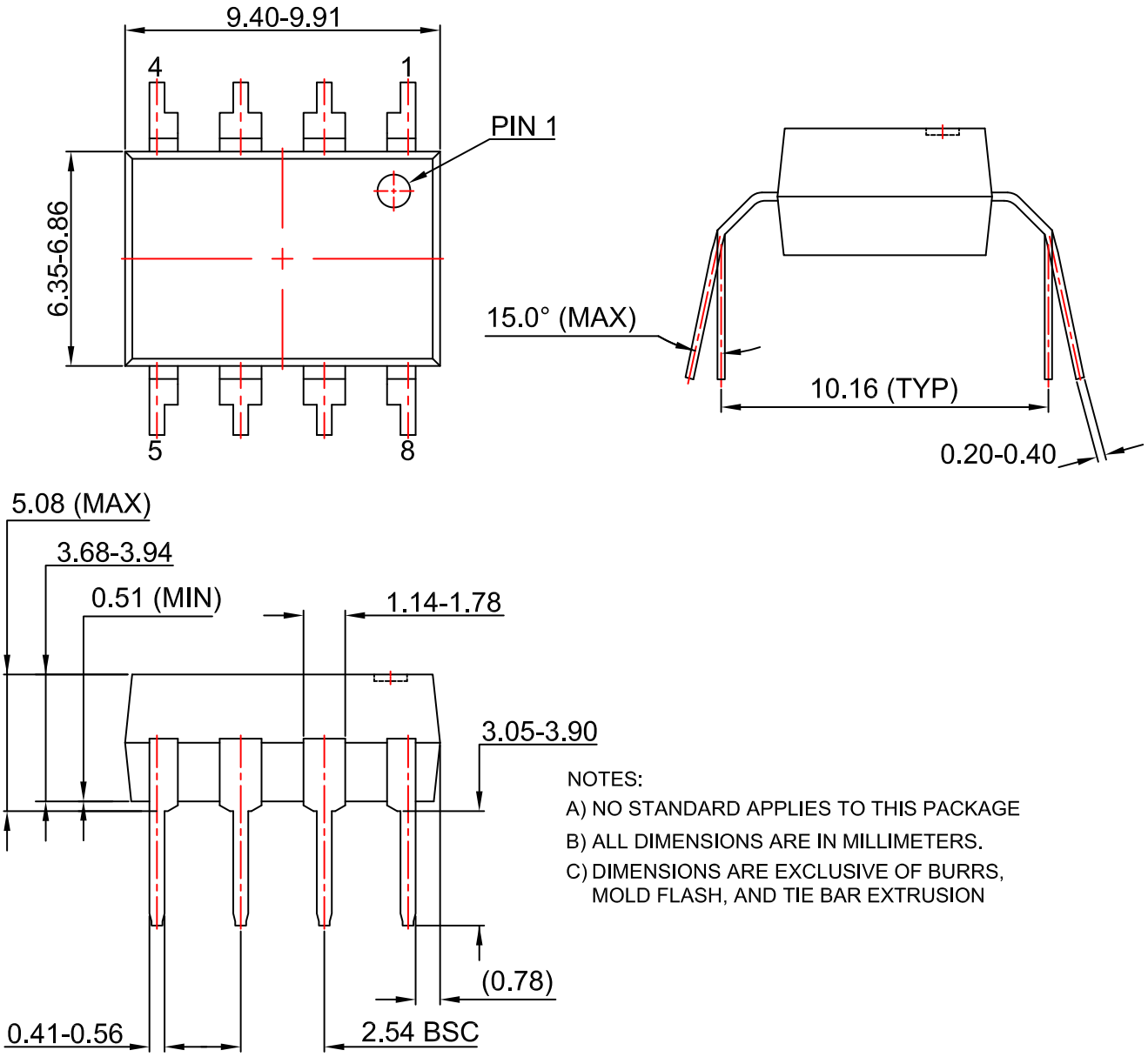

NOTES:
A) NO STANDARD APPLIES TO THIS PACKAGE
B) ALL DIMENSIONS ARE IN MILLIMETERS.
C) DIMENSIONS ARE EXCLUSIVE OF BURRS, MOLD FLASH, AND TIE BAR EXTRUSION

DOCUMENT NUMBER:	**98AON13445G**	Electronic versions are uncontrolled except when accessed directly from the Document Repository. Printed versions are uncontrolled except when stamped "CONTROLLED COPY" in red.
DESCRIPTION:	**PDIP8 6.6X3.81, 2.54P**	**PAGE 1 OF 1**

ON Semiconductor and ON are trademarks of Semiconductor Components Industries, LLC dba ON Semiconductor or its subsidiaries in the United States and/or other countries. ON Semiconductor reserves the right to make changes without further notice to any products herein. ON Semiconductor makes no warranty, representation or guarantee regarding the suitability of its products for any particular purpose, nor does ON Semiconductor assume any liability arising out of the application or use of any product or circuit, and specifically disclaims any and all liability, including without limitation special, consequential or incidental damages. ON Semiconductor does not convey any license under its patent rights nor the rights of others.

© Semiconductor Components Industries, LLC, 2019

PDIP8 9.655x6.6, 2.54P
CASE 646CQ
ISSUE O

DATE 18 SEP 2017

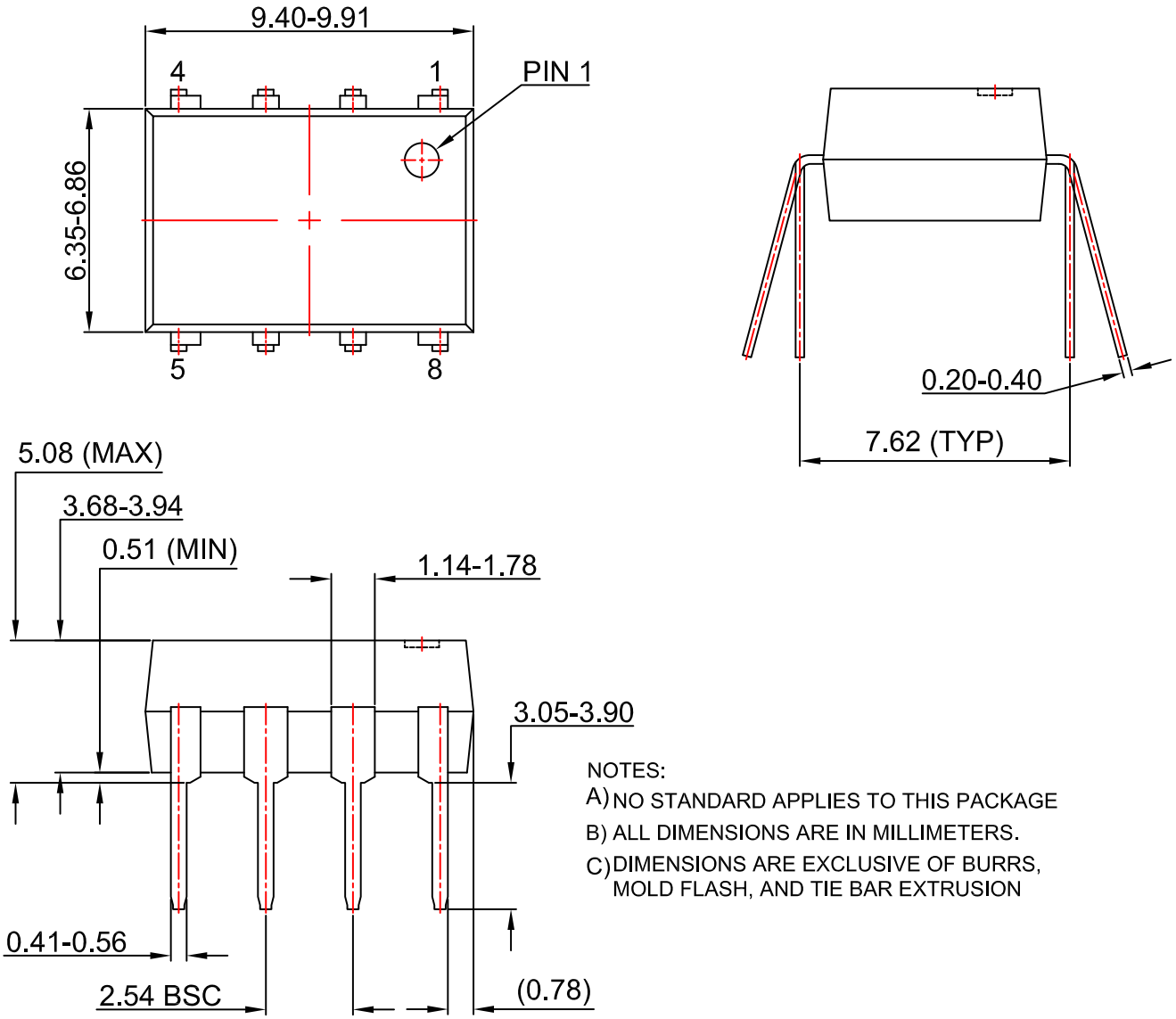

NOTES:
A) NO STANDARD APPLIES TO THIS PACKAGE
B) ALL DIMENSIONS ARE IN MILLIMETERS.
C) DIMENSIONS ARE EXCLUSIVE OF BURRS, MOLD FLASH, AND TIE BAR EXTRUSION

DOCUMENT NUMBER:	**98AON13446G**	Electronic versions are uncontrolled except when accessed directly from the Document Repository. Printed versions are uncontrolled except when stamped "CONTROLLED COPY" in red.
DESCRIPTION:	**PDIP8 9.655X6.6, 2.54P**	**PAGE 1 OF 1**

ON Semiconductor and ON are trademarks of Semiconductor Components Industries, LLC dba ON Semiconductor or its subsidiaries in the United States and/or other countries. ON Semiconductor reserves the right to make changes without further notice to any products herein. ON Semiconductor makes no warranty, representation or guarantee regarding the suitability of its products for any particular purpose, nor does ON Semiconductor assume any liability arising out of the application or use of any product or circuit, and specifically disclaims any and all liability, including without limitation special, consequential or incidental damages. ON Semiconductor does not convey any license under its patent rights nor the rights of others.

© Semiconductor Components Industries, LLC, 2019

PDIP8 GW
CASE 709AC
ISSUE O

DATE 31 JUL 2016

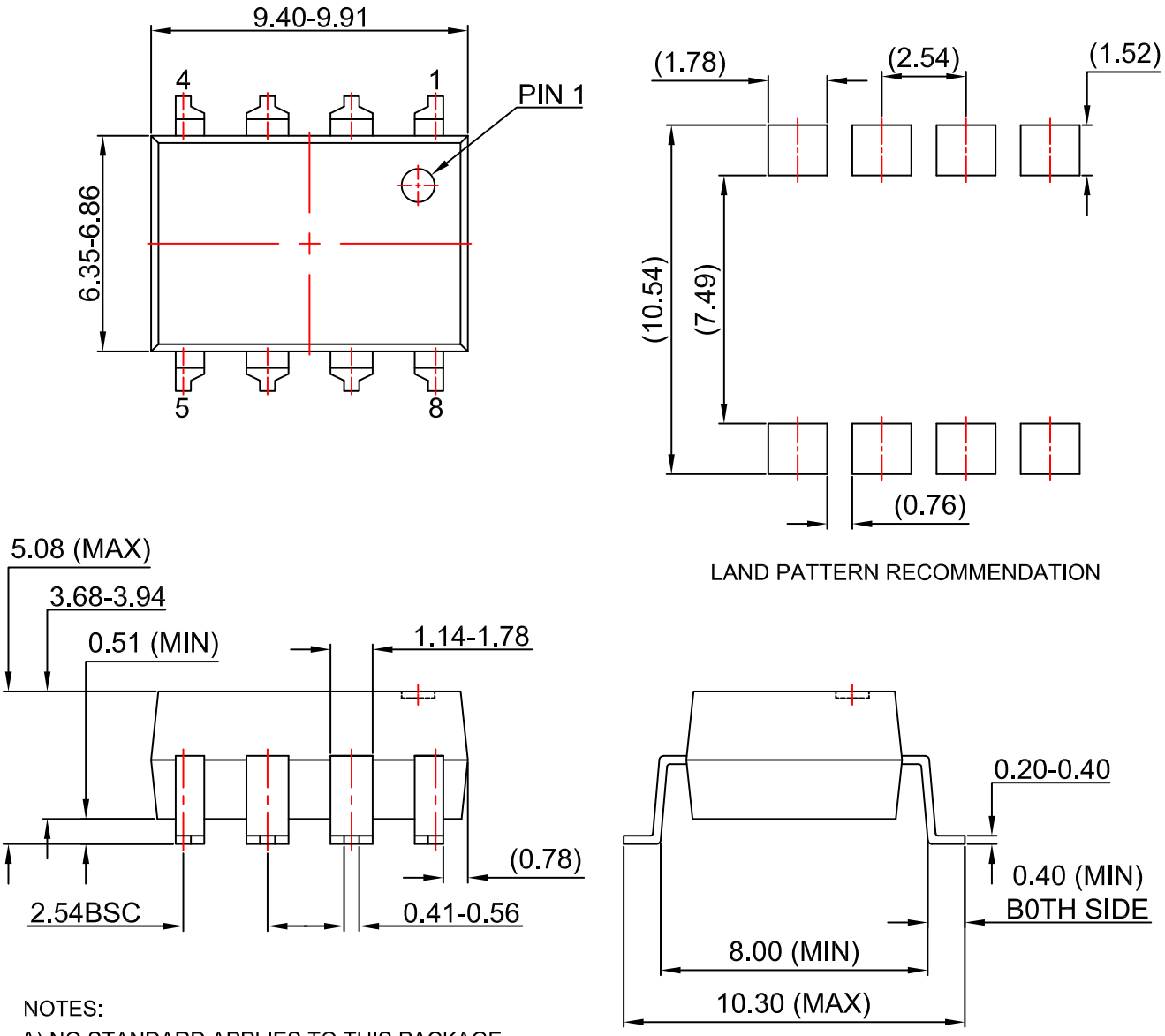

LAND PATTERN RECOMMENDATION

NOTES:

A) NO STANDARD APPLIES TO THIS PACKAGE

B) ALL DIMENSIONS ARE IN MILLIMETERS.

C) DIMENSIONS ARE EXCLUSIVE OF BURRS, MOLD FLASH, AND TIE BAR EXTRUSION

DOCUMENT NUMBER:	**98AON13447G**	Electronic versions are uncontrolled except when accessed directly from the Document Repository. Printed versions are uncontrolled except when stamped "CONTROLLED COPY" in red.
DESCRIPTION:	**PDIP8 GW**	**PAGE 1 OF 1**

onsemi and onsemi are trademarks of Semiconductor Components Industries, LLC dba **onsemi** or its subsidiaries in the United States and/or other countries. **onsemi** reserves the right to make changes without further notice to any products herein. **onsemi** makes no warranty, representation or guarantee regarding the suitability of its products for any particular purpose, nor does **onsemi** assume any liability arising out of the application or use of any product or circuit, and specifically disclaims any and all liability, including without limitation special, consequential or incidental damages. **onsemi** does not convey any license under its patent rights nor the rights of others.

onsemi, onsemi, and other names, marks, and brands are registered and/or common law trademarks of Semiconductor Components Industries, LLC dba "**onsemi**" or its affiliates and/or subsidiaries in the United States and/or other countries. **onsemi** owns the rights to a number of patents, trademarks, copyrights, trade secrets, and other intellectual property. A listing of **onsemi**'s product/patent coverage may be accessed at www.onsemi.com/site/pdf/Patent−Marking.pdf. **onsemi** reserves the right to make changes at any time to any products or information herein, without notice. The information herein is provided "as−is" and **onsemi** makes no warranty, representation or guarantee regarding the accuracy of the information, product features, availability, functionality, or suitability of its products for any particular purpose, nor does **onsemi** assume any liability arising out of the application or use of any product or circuit, and specifically disclaims any and all liability, including without limitation special, consequential or incidental damages. Buyer is responsible for its products and applications using **onsemi** products, including compliance with all laws, regulations and safety requirements or standards, regardless of any support or applications information provided by **onsemi**. "Typical" parameters which may be provided in **onsemi** data sheets and/or specifications can and do vary in different applications and actual performance may vary over time. All operating parameters, including "Typicals" must be validated for each customer application by customer's technical experts. **onsemi** does not convey any license under any of its intellectual property rights nor the rights of others. **onsemi** products are not designed, intended, or authorized for use as a critical component in life support systems or any FDA Class 3 medical devices or medical devices with a same or similar classification in a foreign jurisdiction or any devices intended for implantation in the human body. Should Buyer purchase or use **onsemi** products for any such unintended or unauthorized application, Buyer shall indemnify and hold **onsemi** and its officers, employees, subsidiaries, affiliates, and distributors harmless against all claims, costs, damages, and expenses, and reasonable attorney fees arising out of, directly or indirectly, any claim of personal injury or death associated with such unintended or unauthorized use, even if such claim alleges that **onsemi** was negligent regarding the design or manufacture of the part. **onsemi** is an Equal Opportunity/Affirmative Action Employer. This literature is subject to all applicable copyright laws and is not for resale in any manner.

ADDITIONAL INFORMATION

TECHNICAL PUBLICATIONS:
Technical Library: www.onsemi.com/design/resources/technical−documentation
onsemi Website: www.onsemi.com

ONLINE SUPPORT: www.onsemi.com/support
For additional information, please contact your local Sales Representative at
www.onsemi.com/support/sales