6-Pin DIP Zero-Cross Triac Driver Output Optocoupler (250/400 Volt Peak)

MOC3031M, MOC3032M, MOC3033M, MOC3041M, MOC3042M, MOC3043M

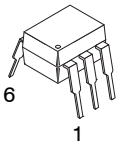

PDIP6 8.51x6.35, 2.54P
CASE 646BX

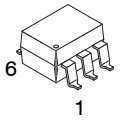

PDIP6 8.51x6.35, 2.54P
CASE 646BY

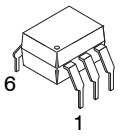

PDIP6 8.51x6.35, 2.54P
CASE 646BZ

Description

The MOC303XM and MOC304XM devices consist of a GaAs infrared emitting diode optically coupled to a monolithic silicon detector performing the function of a zero voltage crossing bilateral triac driver.

They are designed for use with a triac in the interface of logic systems to equipment powered from 115 VAC lines, such as teletypewriters, CRTs, solid−state relays, industrial controls, printers, motors, solenoids and consumer appliances, etc.

Features

- Simplifies Logic Control of 115 VAC Power
- Zero Voltage Crossing to Minimize Conducted and Radiated Line Noise
- dv/dt of 2000 V/μs Typical, 1000 V/μs Guaranteed
- Peak Blocking Voltage
  - 250 V, MOC306xM
  - 400 V, MOC304xM
- Safety and Regulatory Approvals
  - UL1577, 4,170 VAC_{RMS} for 1 Minute
  - DIN EN/IEC60747−5−5
- These are Pb−Free Devices

Applications

- Solenoid/Valve Controls
- Lighting Controls
- Static Power Switches
- AC Motor Drives
- Temperature Controls
- E.M. Contactors
- AC Motor Starters
- Solid State Relays

MARKING DIAGRAM

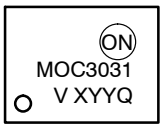

MOC3031	= Device Number
V	= DIN EN/IEC60747−5−5 Option (only appears on component ordered with this option)
X	= One−Digit Year Code, e.g., ‘5’
YY	= Two−Digit Work Week, Ranging from ‘01’ to ‘53’
Q	= Assembly Package Code

SCHEMATIC

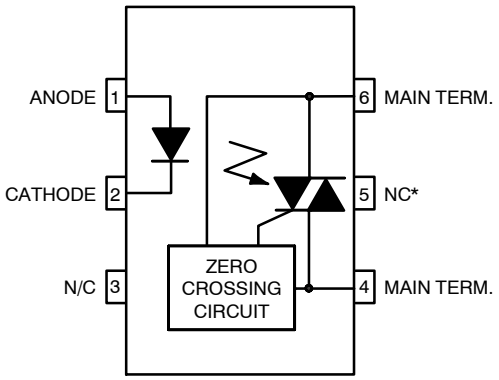

*DO NOT CONNECT (TRIAC SUBSTRATE)

ORDERING INFORMATION

See detailed ordering and shipping information on page 8 of this data sheet.

© Semiconductor Components Industries, LLC, 2005

SAFETY AND INSULATION RATINGS (As per DIN EN/IEC 60747−5−5, this optocoupler is suitable for “safe electrical insulation” only within the safety limit data. Compliance with the safety ratings shall be ensured by means of protective circuits.)

Parameter		Characteristics
Installation Classifications per DIN VDE 0110/1.89 Table 1, For Rated Mains Voltage	<150 V_{RMS}	I–IV
	<300 V_{RMS}	I–IV
Climatic Classification		40/85/21
Pollution Degree (DIN VDE 0110/1.89)		2
Comparative Tracking Index		175

Symbol	Parameter	Value	Unit
V_{PR}	Input−to−Output Test Voltage, Method A, V_{IORM} x 1.6 = V_{PR}, Type and Sample Test with t_m = 10 s, Partial Discharge < 5 pC	1275	V_{peak}
	Input−to−Output Test Voltage, Method B, V_{IORM} x 1.875 = V_{PR}, 100% Production Test with t_m = 1 s, Partial Discharge < 5 pC	1594	V_{peak}
V_{IORM}	Maximum Working Insulation Voltage	850	V_{peak}
V_{IOTM}	Highest Allowable Over−Voltage	6000	V_{peak}
	External Creepage	≥7	mm
	External Clearance	≥7	mm
	External Clearance (for Option TV, 0.4” Lead Spacing)	≥10	mm
DTI	Distance Through Insulation (Insulation Thickness)	≥0.5	mm
R_{IO}	Insulation Resistance at T_S, V_{IO} = 500 V	$>10^9$	Ω

ABSOLUTE MAXIMUM RATINGS (T_A = 25°C unless otherwise noted)

Symbol	Parameter	Device	Value	Unit
TOTAL DEVICE				
T_{STG}	Storage Temperature	All	−40 to +125	°C
T_{OPR}	Operating Temperature	All	−40 to +85	°C
T_J	Junction Temperature Range	All	−40 to +100	°C
T_{SOL}	Lead Solder Temperature	All	260 for 10 seconds	°C
P_D	Total Device Power Dissipation at 25°C Ambient	All	250	mW
	Derate Above 25°C		2.94	mW/°C
EMITTER				
I_F	Continuous Forward Current	All	60	mA
V_R	Reverse Voltage	All	6	V
P_D	Total Power Dissipation at 25°C Ambient	All	120	mW
	Derate Above 25°C		1.41	mW/°C
DETECTOR				
V_{DRM}	Off−State Output Terminal Voltage	MOC3031M MOC3032M MOC3033M	250	V
		MOC3041M MOC3042M MOC3043M	400	V
I_{TSM}	Peak Non−Repetitive Surge Current (Surge Cycle 60 Hz Sine Wave)	All	1	A_{peak}
I_{TM}	Peak Repetitive On−State Current	All	100	mA_{peak}
P_D	Total Power Dissipation at 25°C Ambient	All	150	mW
	Derate Above 25°C		1.76	mW/°C

Stresses exceeding those listed in the Maximum Ratings table may damage the device. If any of these limits are exceeded, device functionality should not be assumed, damage may occur and reliability may be affected.

ELECTRICAL CHARACTERISTICS (T_A = 25°C, unless otherwise noted)

Symbol	Parameter	Test Conditions	Device	Min	Typ	Max	Unit
INDIVIDUAL COMPONENT CHARACTERISTICS							
EMITTER							
V_F	Input Forward Voltage	I_F = 30 mA	All	–	1.25	1.50	V
I_R	Reverse Leakage Current	V_R = 6 V	All	–	0.01	100	μA
DETECTOR							
I_{DRM1}	Peak Blocking Current, Either Direction	V_{DRM} = 600 V, I_F = 0 (Note 1)	All	–	–	100	nA
V_{TM}	Peak On−State Voltage, Either Direction	I_{TM} = 100 mA peak, I_F = 0	All	–	1.8	3.0	V
dv/dt	Critical Rate of Rise of Off−State Voltage	I_F = 0 (Note 2)	All	1000	2000	–	V/μs
TRANSFER CHARACTERISTICS							
I_{FT}	LED Trigger Current	Main Terminal Voltage = 3 V (Note 3)	MOC3031M MOC3041M	–	–	15	mA
			MOC3032M MOC3042M	–	–	10	
			MOC3033M MOC3043M	–	–	5	
I_H	Holding Current, Either Direction		All	–	400	–	μA
ZERO CROSSING CHARACTERISTICS							
V_{IH}	Inhibit Voltage	I_F = rated I_{FT}, MT1−MT2 voltage above which device will not trigger off−state	All	–	–	20	V
I_{DRM2}	Leakage in Inhibited State	I_F = rated I_{FT}, rated V_{DRM} off−state	All	–	–	2	mA
ISOLATION CHARACTERISTICS							
V_{ISO}	Isolation Voltage (Note 4)	t = 1 Minute	All	4170	–	–	VAC_{RMS}

Product parametric performance is indicated in the Electrical Characteristics for the listed test conditions, unless otherwise noted. Product performance may not be indicated by the Electrical Characteristics if operated under different conditions.

1. Test voltage must be applied within dv/dt rating.
2. This is static dv/dt. Commutating dv/dt is a function of the load−driving thyristor(s) only.
3. All devices are guaranteed to trigger at an I_F value less than or equal to max I_{FT}. Therefore, recommended operating I_F lies between max I_{FT} (15 mA for MOC3031M and MOC3041M, 10 mA for MOC3032M and MOC3042M, 5 mA for MOC3033M and MOC3043M) and absolute maximum I_F (60 mA).
4. Isolation voltage, V_{ISO}, is an internal device dielectric breakdown rating. For this test, pins 1 and 2 are common, and pins 4, 5 and 6 are common.

TYPICAL PERFORMANCE CURVES

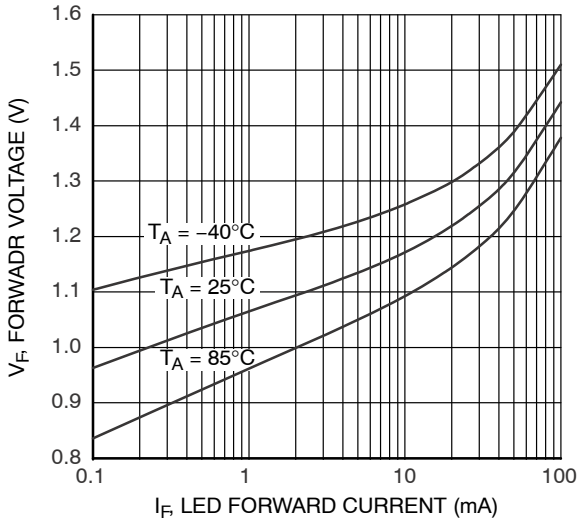

Figure 1. LED Forward Voltage vs. Forward Current

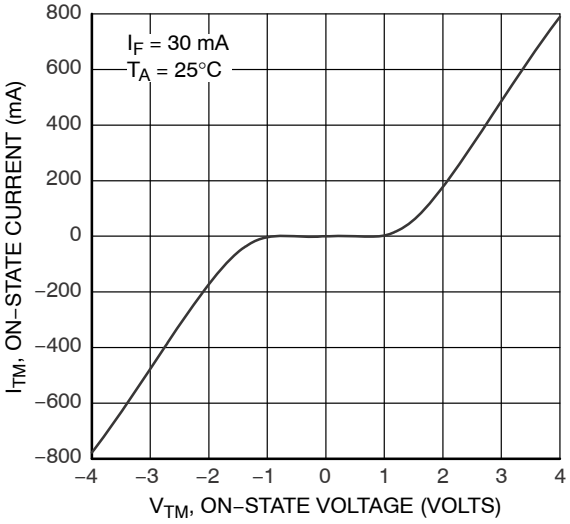

Figure 2. On−State Characteristics

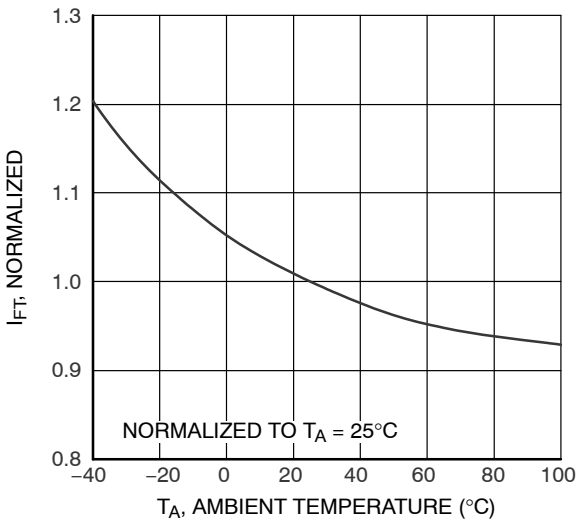

Figure 3. Trigger Current Vs. Temperature

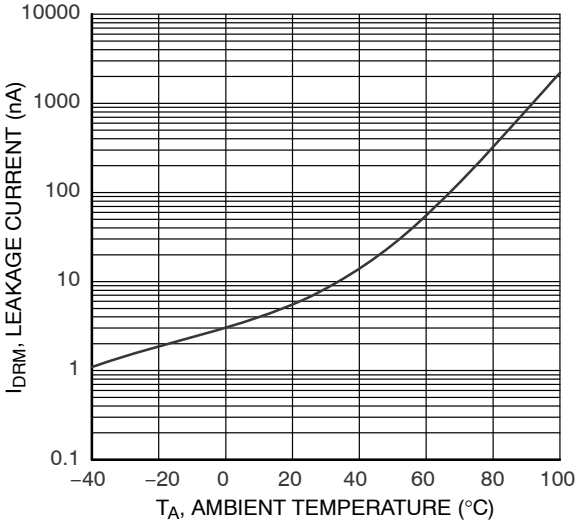

Figure 4. Leakage Current, I_{DRM} vs. Temperature

TYPICAL PERFORMANCE CURVES (Continued)

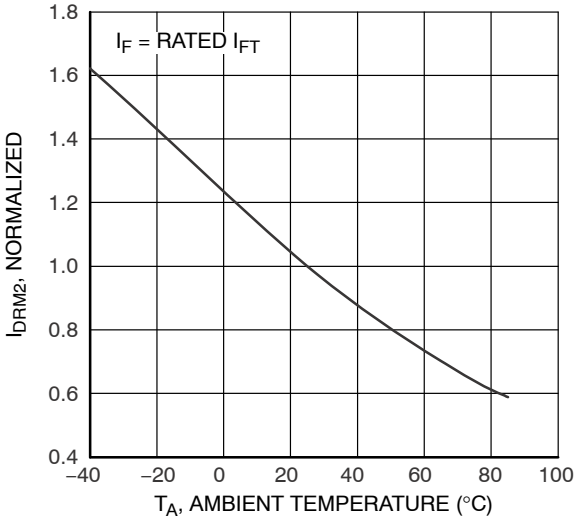

Figure 5. I_{DRM2} – Leakage in Inhibit State vs. Temperature

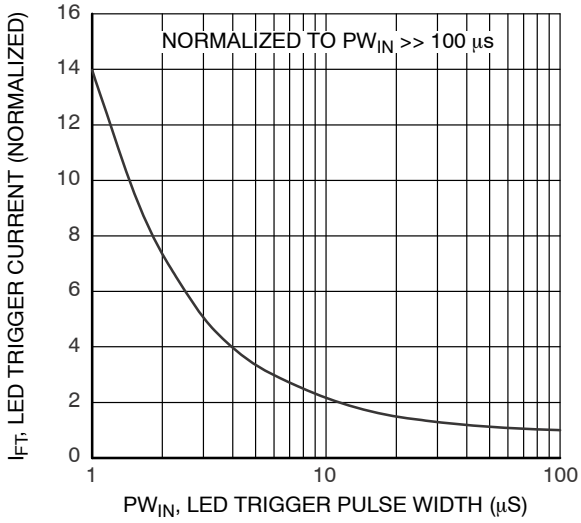

Figure 6. LED Current Required to Trigger vs. LED Pulse Width

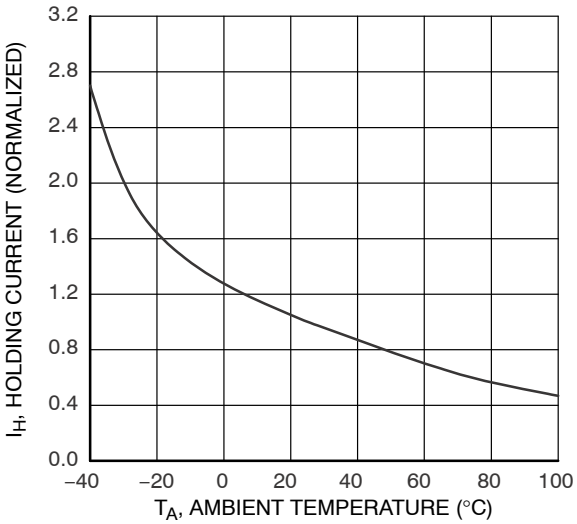

Figure 7. Holding Current, I_H vs. Temperature

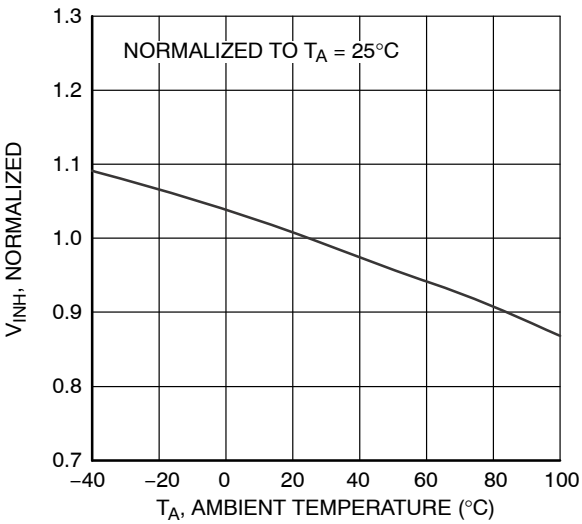

Figure 8. Inhibit Voltage vs. Temperature

APPLICATION INFORMATION

Typical circuit (Figure 9, 10) for use when hot line switching is required. In this circuit the “hot” side of the line is switched and the load connected to the cold or neutral side. The load may be connected to either the neutral or hot line.

R_{in} is calculated so that I_F is equal to the rated I_{FT} of the part, 5 mA for the MOC3033M and MOC3043M, 10 mA for the MOC3032M and MOC3042M, or 15 mA for the MOC3031M and MOC3041M. The 39 ohm resistor and 0.01 μF capacitor are for snubbing of the triac and may or may not be necessary depending upon the particular triac and load used.

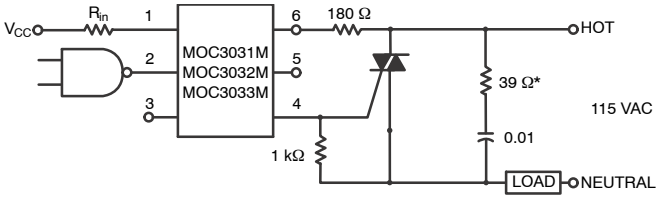

*For highly inductive loads (power factor < 0.5), change this value to 360 ohms.

Figure 9. Hot−Line Switching Application Circuit (MOC3031M, MOC3032M, MOC3033M)

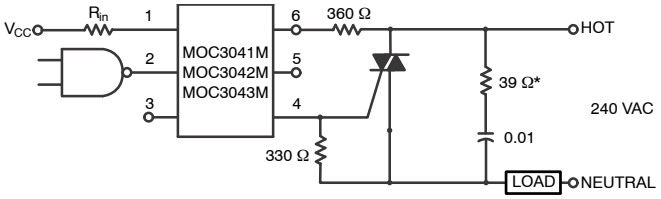

*For highly inductive loads (power factor < 0.5), change this value to 360 ohms.

Figure 10. Hot−Line Switching Application Circuit (MOC3041M, MOC3042M, MOC3043M)

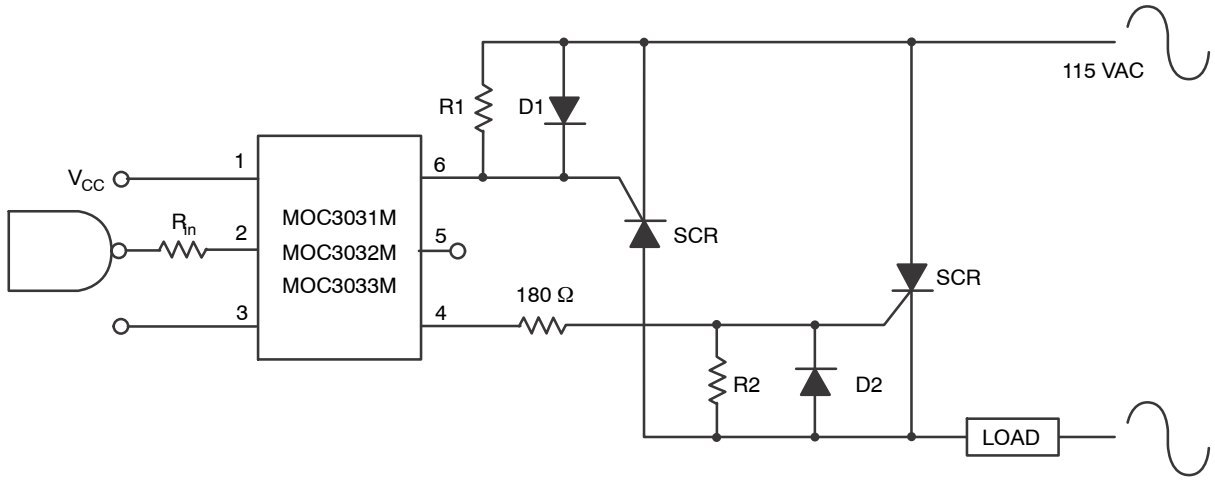

Figure 11. Inverse−Parallel SCR Driver Circuit (MOC3031M, MOC3032M, MOC3033M)

Suggested method of firing two, back−to−back SCR’s with a **onsemi** triac driver. Diodes can be 1N4001; resistors, R1 and R2, are optional 1 kΩ.

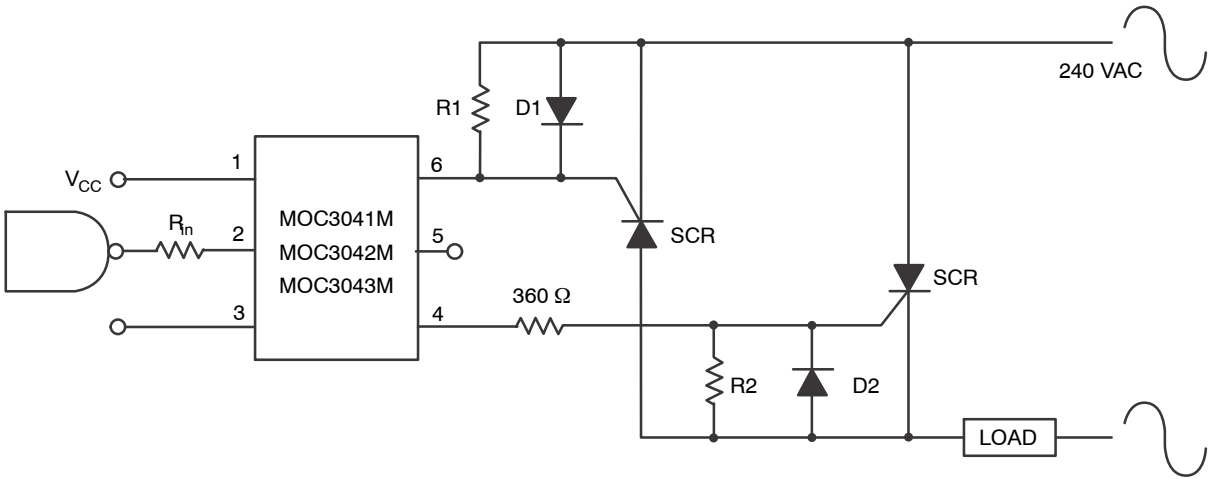

Figure 12. Inverse−Parallel SCR Driver Circuit (MOC3041M, MOC3042M, MOC3043M)

Suggested method of firing two, back−to−back SCR's with a **onsemi** triac driver. Diodes can be 1N4001; resistors, R1 and R2, are optional 330Ω.

NOTE: This optoisolator should not be used to drive a load directly. It is intended to be a trigger device only.

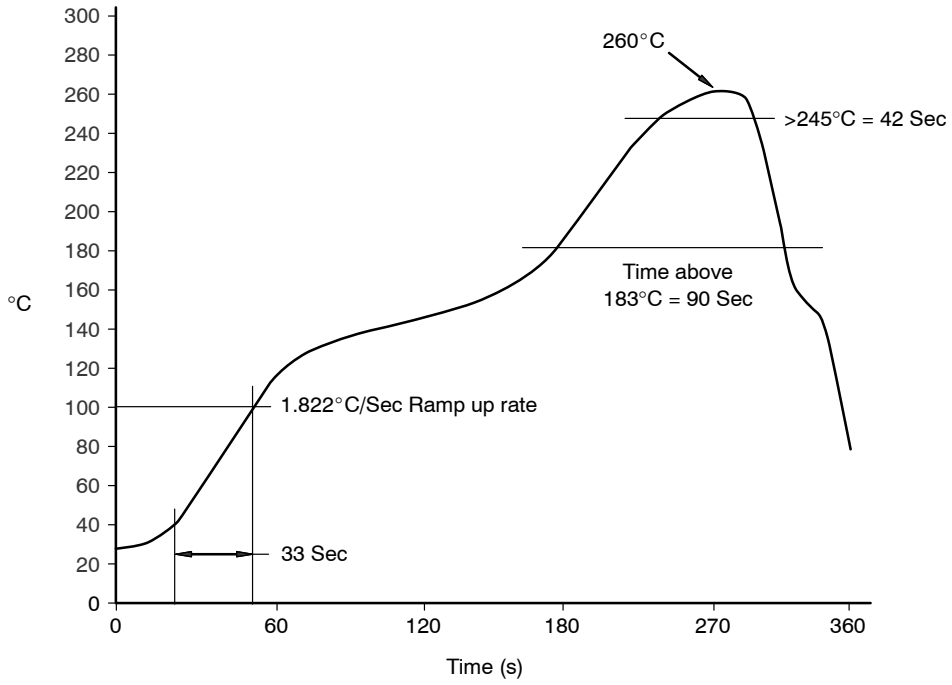

Figure 13. Reflow Profile

ORDERING INFORMATION (Note 5)

Part Number	Package	Shipping†
MOC3031M	DIP 6−Pin (Pb−Free)	50 Units / Tube
MOC3031SM	SMT 6−Pin (Lead Bend) (Pb−Free)	50 Units / Tube
MOC3031SR2M	SMT 6−Pin (Lead Bend) (Pb−Free)	1000 / Tape & Reel
MOC3031VM	DIP 6−Pin, DIN EN/IEC60747−5−5 Option (Pb−Free)	50 Units / Tube
MOC3031SVM	SMT 6−Pin (Lead Bend), DIN EN/IEC60747−5−5 Option (Pb−Free)	50 Units / Tube
MOC3031SR2VM	SMT 6−Pin (Lead Bend), DIN EN/IEC60747−5−5 Option (Pb−Free)	1000 / Tape & Reel
MOC3031TVM	DIP 6−Pin, 0.4” Lead Spacing, DIN EN/IEC60747−5−5 Option (Pb−Free)	50 Units / Tube

†For information on tape and reel specifications, including part orientation and tape sizes, please refer to our Tape and Reel Packaging Specifications Brochure, BRD8011/D.

5. The product orderable part number system listed in this table also applies to the MOC3032M, MOC3033M, MOC3041M, MOC3042M, and MOC3043M product families.

PDIP6 8.51x6.35, 2.54P
CASE 646BX
ISSUE O

DATE 31 JUL 2016

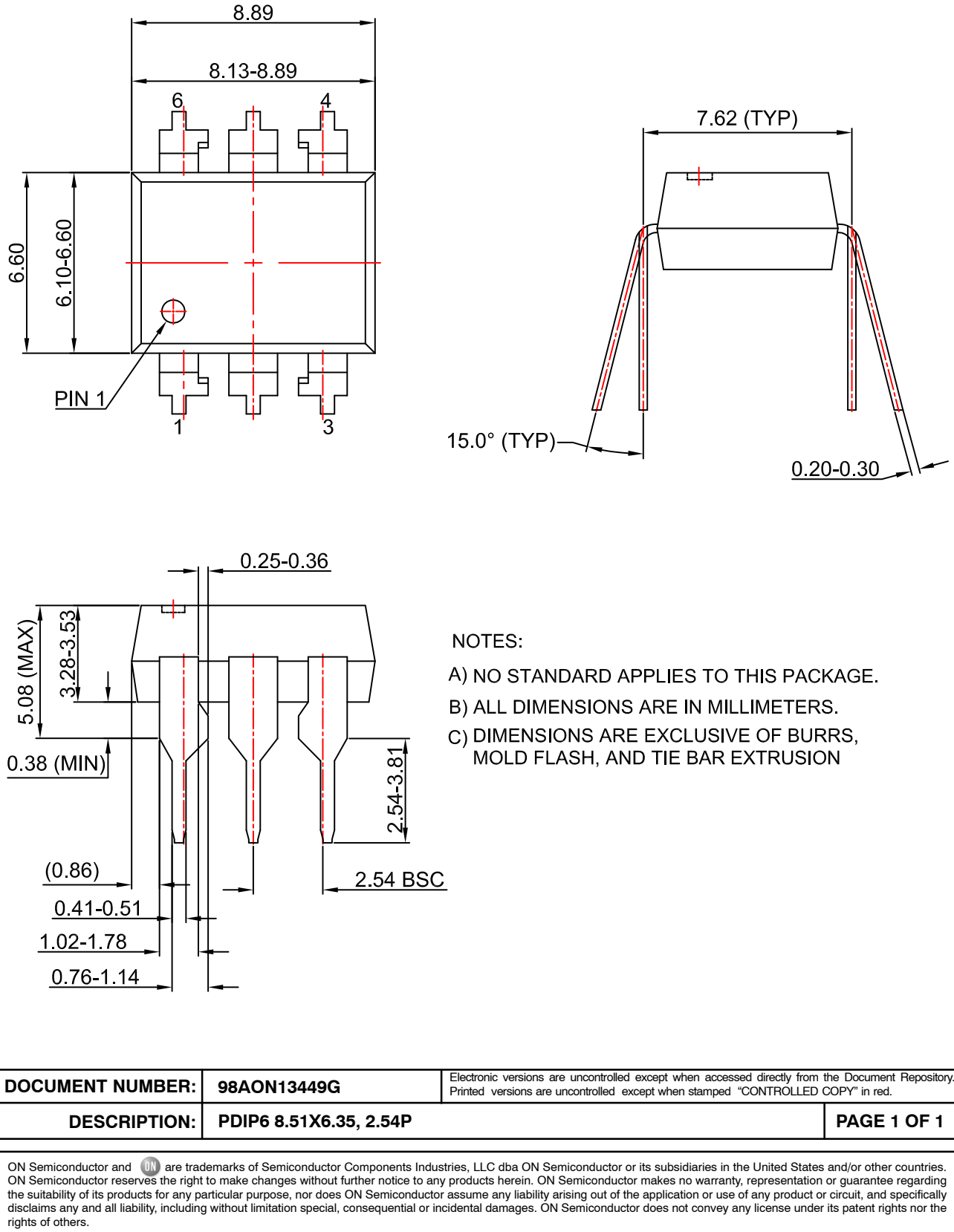

NOTES:

A) NO STANDARD APPLIES TO THIS PACKAGE.

B) ALL DIMENSIONS ARE IN MILLIMETERS.

C) DIMENSIONS ARE EXCLUSIVE OF BURRS, MOLD FLASH, AND TIE BAR EXTRUSION

DOCUMENT NUMBER:	**98AON13449G**	Electronic versions are uncontrolled except when accessed directly from the Document Repository. Printed versions are uncontrolled except when stamped "CONTROLLED COPY" in red.
DESCRIPTION:	**PDIP6 8.51X6.35, 2.54P**	**PAGE 1 OF 1**

ON Semiconductor and ON are trademarks of Semiconductor Components Industries, LLC dba ON Semiconductor or its subsidiaries in the United States and/or other countries. ON Semiconductor reserves the right to make changes without further notice to any products herein. ON Semiconductor makes no warranty, representation or guarantee regarding the suitability of its products for any particular purpose, nor does ON Semiconductor assume any liability arising out of the application or use of any product or circuit, and specifically disclaims any and all liability, including without limitation special, consequential or incidental damages. ON Semiconductor does not convey any license under its patent rights nor the rights of others.

© Semiconductor Components Industries, LLC, 2019

MECHANICAL CASE OUTLINE
PACKAGE DIMENSIONS

ON Semiconductor®

PDIP6 8.51x6.35, 2.54P
CASE 646BY
ISSUE A

DATE 15 JUL 2019

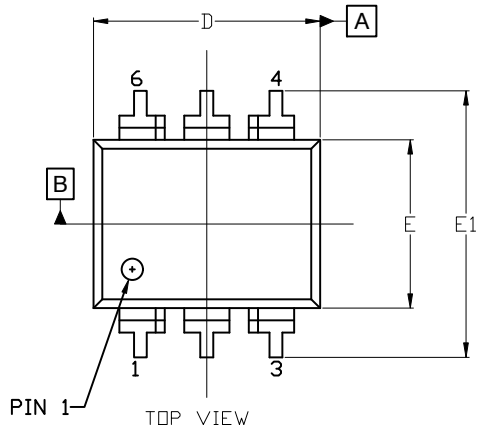

NOTES:
1. DIMENSIONING AND TOLERANCING PER ASME Y14.5M, 2009.
2. CONTROLLING DIMENSION: MILLIMETERS
3. DIMENSIONS A, A1, AND L ARE MEASURED WITH THE PACKAGE SEATED.
4. DIMENSIONS D, D1, AND E1 DO NOT INCLUDE MOLD FLASH OR PROTRUSIONS. MOLD FLASH OR PROTRUSIONS ARE NOT TO EXCEED 2.54mm.
5. PACKAGE CONTOUR IS OPTIONAL (ROUNDED OR SQUARE CORNERS).
6. CENTER LINE OF CORNER LEADS ARE LOCATED BY LOCATING THE CENTER OF FEATURE b2 AND b3.

DIM	MILLIMETERS		
	MIN.	NOM.	MAX.
A	---	---	4.80
A1	0.38	---	---
A2	3.28	3.40	3.53
A3		2.49 REF	
A4		1.89 REF	
b	0.41	0.46	0.51
b1	0.76	0.92	1.14
b2	0.25	0.28	0.36
b3	1.02	1.40	1.78
b4		1.778 REF	
c	0.20	0.25	0.30
D	8.13	8.51	8.89
D1		0.86 REF	
E	6.10	6.35	6.60
E1	8.43	9.17	9.90
E2		8.13 REF	
e		2.54 BSC	
L	0.16	0.52	0.88

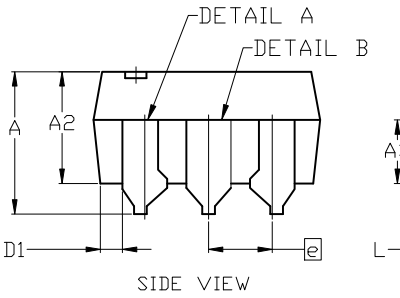

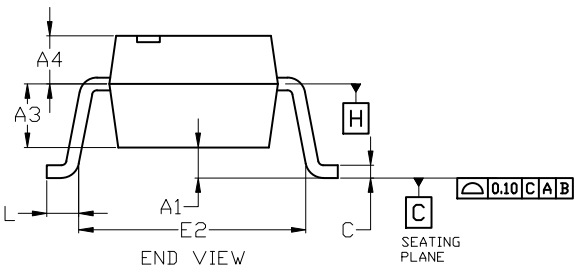

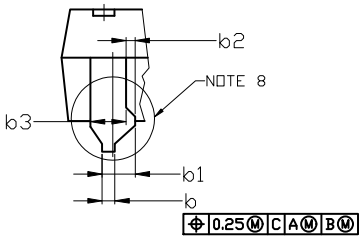

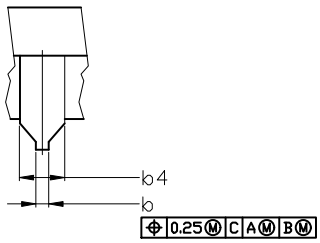

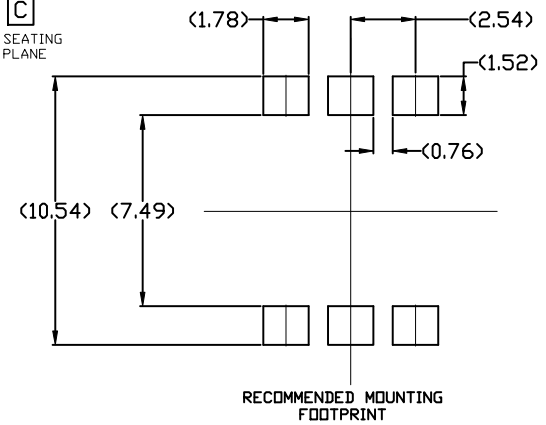

* For additional information on our Pb-Free strategy and soldering details, please download the ON Semiconductor Soldering and Mounting Techniques Reference Manual, SOLDERRM/D.

DOCUMENT NUMBER:	98AON13450G	Electronic versions are uncontrolled except when accessed directly from the Document Repository. Printed versions are uncontrolled except when stamped "CONTROLLED COPY" in red.
DESCRIPTION:	PDIP6 8.51x6.35, 2.54P	PAGE 1 OF 1

ON Semiconductor and ON are trademarks of Semiconductor Components Industries, LLC dba ON Semiconductor or its subsidiaries in the United States and/or other countries. ON Semiconductor reserves the right to make changes without further notice to any products herein. ON Semiconductor makes no warranty, representation or guarantee regarding the suitability of its products for any particular purpose, nor does ON Semiconductor assume any liability arising out of the application or use of any product or circuit, and specifically disclaims any and all liability, including without limitation special, consequential or incidental damages. ON Semiconductor does not convey any license under its patent rights nor the rights of others.

© Semiconductor Components Industries, LLC, 2018

PDIP6 8.51x6.35, 2.54P
CASE 646BZ
ISSUE O

DATE 31 JUL 2016

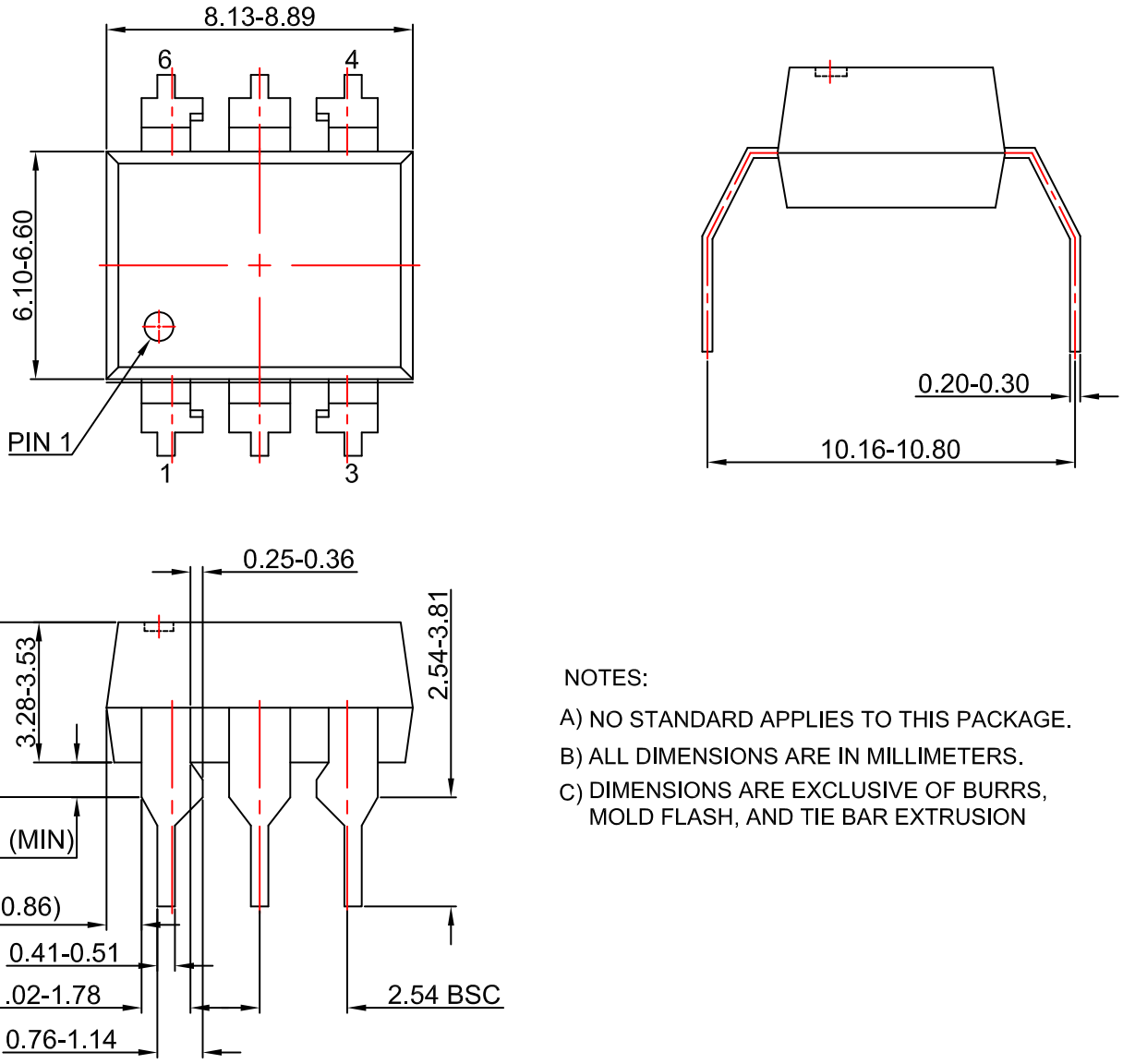

NOTES:

A) NO STANDARD APPLIES TO THIS PACKAGE.

B) ALL DIMENSIONS ARE IN MILLIMETERS.

C) DIMENSIONS ARE EXCLUSIVE OF BURRS, MOLD FLASH, AND TIE BAR EXTRUSION

DOCUMENT NUMBER:	**98AON13451G**	Electronic versions are uncontrolled except when accessed directly from the Document Repository. Printed versions are uncontrolled except when stamped "CONTROLLED COPY" in red.
DESCRIPTION:	**PDIP6 8.51X6.35, 2.54P**	**PAGE 1 OF 1**

ON Semiconductor and ON are trademarks of Semiconductor Components Industries, LLC dba ON Semiconductor or its subsidiaries in the United States and/or other countries. ON Semiconductor reserves the right to make changes without further notice to any products herein. ON Semiconductor makes no warranty, representation or guarantee regarding the suitability of its products for any particular purpose, nor does ON Semiconductor assume any liability arising out of the application or use of any product or circuit, and specifically disclaims any and all liability, including without limitation special, consequential or incidental damages. ON Semiconductor does not convey any license under its patent rights nor the rights of others.

© Semiconductor Components Industries, LLC, 2019

onsemi, ONSEMI , and other names, marks, and brands are registered and/or common law trademarks of Semiconductor Components Industries, LLC dba "**onsemi**" or its affiliates and/or subsidiaries in the United States and/or other countries. **onsemi** owns the rights to a number of patents, trademarks, copyrights, trade secrets, and other intellectual property. A listing of **onsemi**'s product/patent coverage may be accessed at www.onsemi.com/site/pdf/Patent−Marking.pdf. **onsemi** reserves the right to make changes at any time to any products or information herein, without notice. The information herein is provided "as−is" and **onsemi** makes no warranty, representation or guarantee regarding the accuracy of the information, product features, availability, functionality, or suitability of its products for any particular purpose, nor does **onsemi** assume any liability arising out of the application or use of any product or circuit, and specifically disclaims any and all liability, including without limitation special, consequential or incidental damages. Buyer is responsible for its products and applications using **onsemi** products, including compliance with all laws, regulations and safety requirements or standards, regardless of any support or applications information provided by **onsemi**. "Typical" parameters which may be provided in **onsemi** data sheets and/or specifications can and do vary in different applications and actual performance may vary over time. All operating parameters, including "Typicals" must be validated for each customer application by customer's technical experts. **onsemi** does not convey any license under any of its intellectual property rights nor the rights of others. **onsemi** products are not designed, intended, or authorized for use as a critical component in life support systems or any FDA Class 3 medical devices or medical devices with a same or similar classification in a foreign jurisdiction or any devices intended for implantation in the human body. Should Buyer purchase or use **onsemi** products for any such unintended or unauthorized application, Buyer shall indemnify and hold **onsemi** and its officers, employees, subsidiaries, affiliates, and distributors harmless against all claims, costs, damages, and expenses, and reasonable attorney fees arising out of, directly or indirectly, any claim of personal injury or death associated with such unintended or unauthorized use, even if such claim alleges that **onsemi** was negligent regarding the design or manufacture of the part. **onsemi** is an Equal Opportunity/Affirmative Action Employer. This literature is subject to all applicable copyright laws and is not for resale in any manner.

PUBLICATION ORDERING INFORMATION

LITERATURE FULFILLMENT:
Email Requests to: orderlit@onsemi.com

onsemi Website: www.onsemi.com

TECHNICAL SUPPORT
North American Technical Support:
Voice Mail: 1 800−282−9855 Toll Free USA/Canada
Phone: 011 421 33 790 2910

Europe, Middle East and Africa Technical Support:
Phone: 00421 33 790 2910
For additional information, please contact your local Sales Representative

◊