CAT24S128

128 Kb I²C CMOS Serial EEPROM with Software Write Protect

ON Semiconductor®

www.onsemi.com



WLCSP−4
C4A SUFFIX
CASE 567KV



WLCSP−4
C4U SUFFIX
CASE 567PC

Description

The CAT24S128 is a 128 Kb Serial CMOS EEPROM, internally organized as 16,384 words of 8 bits each.

It features a 64−byte page write buffer and supports both the Standard (100 kHz), Fast (400 kHz) and Fast−Plus (1 MHz) I²C protocol.

The device features programmable software write protection which provides partial as well as full memory array protection.

Features

- Supports Standard, Fast and Fast−Plus I²C Protocol
- 1.7 V to 5.5 V Supply Voltage Range
- 64−Byte Page Write Buffer
- User Programmable Block Write Protection − Protect 1/4, 1/2, 3/4 or Entire EEPROM Array
- Schmitt Triggers and Noise Suppression Filters on I²C Bus Inputs (SCL and SDA)
- Low Power CMOS Technology
- 1,000,000 Program/Erase Cycles
- 40 Year Data Retention
- Industrial Temperature Range: −40°C to +85°C
- Ultra−thin 4−ball WLCSP Package
- This Device is Pb−Free, Halogen Free/BFR Free and RoHS Compliant**

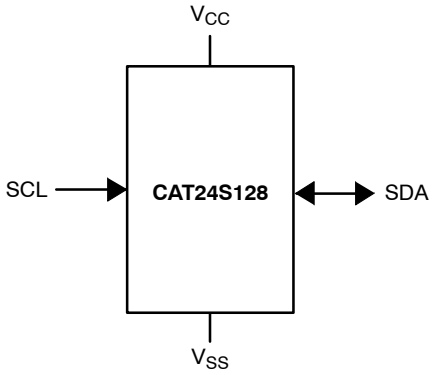

Figure 1. Functional Symbol

** For additional information on our Pb−Free strategy and soldering details, please download the ON Semiconductor Soldering and Mounting Techniques Reference Manual, SOLDERRM/D.

PIN CONFIGURATION

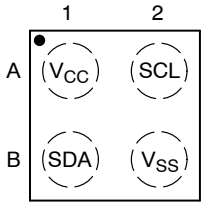

WLCSP−4 (C4A, C4U)
(Top View)

MARKING DIAGRAMS

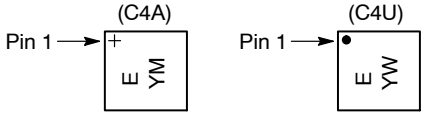

E = Specific Device Code (see ordering information)
Y = Production Year (Last Digit)
M = Production Month (1−9, O, N, D)
W = Production Week Code

PIN FUNCTION

Pin Name	Function
SDA	Serial Data Input/Output
SCL	Serial Clock Input
V_{CC}	Power Supply
V_{SS}	Ground

ORDERING INFORMATION

See detailed ordering and shipping information in the package dimensions section on page 9 of this data sheet.

© Semiconductor Components Industries, LLC, 2015

Table 1. ABSOLUTE MAXIMUM RATINGS

Parameter	Rating	Units
Storage Temperature	−65 to +150	°C
Voltage on Any Pin with Respect to Ground (Note 1)	−0.5 to +6.5	V

Stresses exceeding those listed in the Maximum Ratings table may damage the device. If any of these limits are exceeded, device functionality should not be assumed, damage may occur and reliability may be affected.

1. The DC input voltage on any pin should not be lower than −0.5 V or higher than V_{CC} + 1.0 V. During transitions, the voltage on any pin may undershoot to no less than −1.5 V or overshoot to no more than V_{CC} + 1.5 V, for periods of less than 20 ns.

Table 2. RELIABILITY CHARACTERISTICS (Note 2)

Symbol	Parameter	Min	Units
N_{END} (Note 3)	Endurance	1,000,000	Program / Erase Cycles
T_{DR} (Note 4)	Data Retention	40	Years

2. These parameters are tested initially and after a design or process change that affects the parameter according to appropriate AEC−Q100 and JEDEC test methods.
3. Page Mode, V_{CC} = 5 V, 25°C
4. T_A = 55°C

Table 3. DC AND AC OPERATING CONDITIONS

Supply Voltage / Temperature Range	Operation
V_{CC} = 1.7 V to 5.5 V / T_A = −40°C to +85°C	READ / WRITE
V_{CC} = 1.6 V to 5.5 V / T_A = −40°C to +85°C	READ
V_{CC} = 1.6 V to 5.5 V / T_A = 0°C to +85°C	WRITE

Table 4. D.C. OPERATING CHARACTERISTICS

Symbol	Parameter	Test Conditions		Min	Max	Units
I_{CCR}	Read Current	Read, f_{SCL} = 400 kHz/1 MHz			1	mA
I_{CCW}	Write Current				2	mA
I_{SB}	Standby Current	All I/O Pins at GND or V_{CC}	$V_{CC} \le 2.5$ V		1	μA
			$V_{CC} > 2.5$ V		2	
I_L	I/O Pin Leakage	Pin at GND or V_{CC}			2	μA
V_{IL1}	Input Low Voltage	$V_{CC} \ge 2.5$ V		−0.5	0.3 V_{CC}	V
V_{IL2}	Input Low Voltage	$V_{CC} < 2.5$ V		−0.5	0.25 V_{CC}	V
V_{IH1}	Input High Voltage	$V_{CC} \ge 2.5$ V		0.7 V_{CC}	V_{CC} + 1	V
V_{IH2}	Input High Voltage	$V_{CC} < 2.5$ V		0.75 V_{CC}	V_{CC} + 1	V
V_{OL1}	Output Low Voltage	$V_{CC} \ge 2.5$ V, I_{OL} = 3.0 mA			0.4	V
V_{OL2}	Output Low Voltage	$V_{CC} < 2.5$ V, I_{OL} = 1.0 mA			0.2	V

Product parametric performance is indicated in the Electrical Characteristics for the listed test conditions, unless otherwise noted. Product performance may not be indicated by the Electrical Characteristics if operated under different conditions.

Table 5. PIN IMPEDANCE CHARACTERISTICS

Symbol	Parameter	Conditions	Max	Units
C_{IN} (Note 5)	SDA I/O Pin Capacitance	V_{IN} = 0 V	8	pF
C_{IN} (Note 5)	Input Capacitance (other pins)	V_{IN} = 0 V	6	pF

5. These parameters are tested initially and after a design or process change that affects the parameter according to appropriate AEC−Q100 and JEDEC test methods.

Table 6. A.C. CHARACTERISTICS (Note 6)

Symbol	Parameter	Standard V_{CC} = 1.7 V – 5.5 V		Fast V_{CC} = 1.7 V – 5.5 V		Fast–Plus V_{CC} = 1.7 V – 5.5 V		Units
		Min	Max	Min	Max	Min	Max	
F_{SCL}	Clock Frequency		100		400		1,000	kHz
$t_{HD:STA}$	START Condition Hold Time	4		0.6		0.25		μs
t_{LOW}	Low Period of SCL Clock	4.7		1.3		0.45		μs
t_{HIGH}	High Period of SCL Clock	4		0.6		0.40		μs
$t_{SU:STA}$	START Condition Setup Time	4.7		0.6		0.25		μs
$t_{HD:DAT}$	Data In Hold Time	0		0		0		μs
$t_{SU:DAT}$	Data In Setup Time	250		100		50		ns
t_R (Note 7)	SDA and SCL Rise Time		1,000	20	300		100	ns
t_F (Note 7)	SDA and SCL Fall Time		300	20	300		100	ns
$t_{SU:STO}$	STOP Condition Setup Time	4		0.6		0.25		μs
t_{BUF}	Bus Free Time Between STOP and START	4.7		1.3		0.5		μs
t_{AA}	SCL Low to Data Out Valid		3.5		0.9		0.40	μs
t_{DH}	Data Out Hold Time	100		100		50		ns
T_i (Note 7)	Noise Pulse Filtered at SCL and SDA Inputs		100		50		50	ns
t_{WR}	Write Cycle Time		5		5		5	ms
t_{PU} (Notes 7, 8)	Power-up to Ready Mode		0.35		0.35		0.35	ms

6. Test conditions according to “A.C. Test Conditions” table.
7. Tested initially and after a design or process change that affects this parameter.
8. t_{PU} is the delay between the time V_{CC} is stable and the device is ready to accept commands.

Table 7. A.C. TEST CONDITIONS

Input Levels	0.2 x V_{CC} to 0.8 x V_{CC}
Input Rise and Fall Times	≤ 50 ns
Input Reference Levels	0.3 x V_{CC}, 0.7 x V_{CC}
Output Reference Levels	0.5 x V_{CC}
Output Load	Current Source: I_{OL} = 3 mA ($V_{CC} \geq$ 2.5 V); I_{OL} = 1 mA (V_{CC} < 2.5 V); C_L = 100 pF

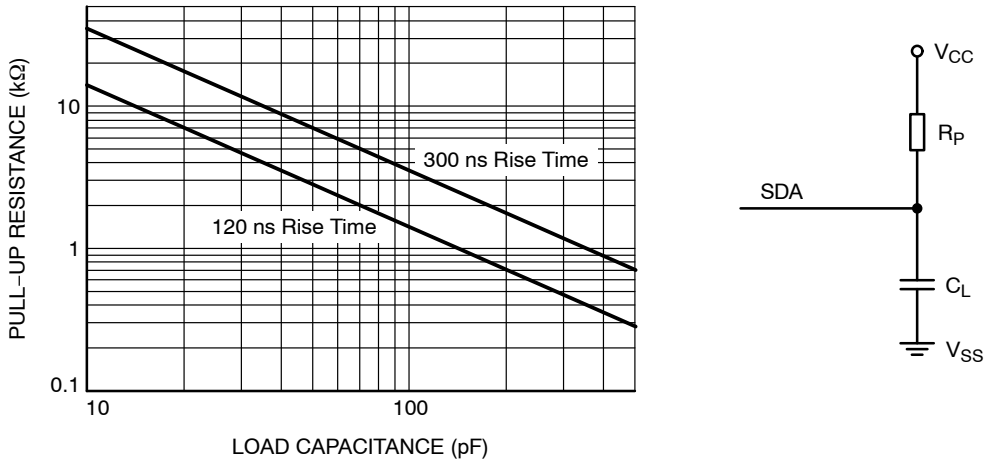

Figure 2. Maximum Pull−up Resistance vs. Load Capacitance

Power−On Reset (POR)

The CAT24S128 incorporates Power−On Reset (POR) circuitry which protects the device against powering up in the wrong state.

The CAT24S128 will power up into Standby mode after V_{CC} exceeds the POR trigger level and will power down into Reset mode when V_{CC} drops below the POR trigger level. This bi−directional POR feature protects the device against 'brown−out' failure following a temporary loss of power.

Pin Description

SCL: The Serial Clock input pin accepts the Serial Clock generated by the Master.

SDA: The Serial Data I/O pin receives input data and transmits data stored in EEPROM. In transmit mode, this pin is open drain. Data is acquired on the positive edge, and is delivered on the negative edge of SCL.

Functional Description

The CAT24S128 supports the Inter−Integrated Circuit (I^2C) Bus data transmission protocol, which defines a device that sends data to the bus as a transmitter and a device receiving data as a receiver. Data flow is controlled by a Master device, which generates the serial clock and all START and STOP conditions. The CAT24S128 acts as a Slave device. Master and Slave alternate as either transmitter or receiver. Up to 8 devices may be connected to the bus as determined by the device address inputs A_0, A_1, and A_2.

I^2C Bus Protocol

The I^2C bus consists of two 'wires', SCL and SDA. The two wires are connected to the V_{CC} supply via pull−up resistors. Master and Slave devices connect to the 2−wire bus via their respective SCL and SDA pins. The transmitting device pulls down the SDA line to 'transmit' a '0' and releases it to 'transmit' a '1'.

Data transfer may be initiated only when the bus is not busy (see A.C. Characteristics).

During data transfer, the SDA line must remain stable while the SCL line is HIGH. An SDA transition while SCL is HIGH will be interpreted as a START or STOP condition (Figure 3). The START condition precedes all commands. It consists of a HIGH to LOW transition on SDA while SCL is HIGH. The START acts as a 'wake−up' call to all receivers. Absent a START, a Slave will not respond to commands. The STOP condition completes all commands. It consists of a LOW to HIGH transition on SDA while SCL is HIGH.

Device Addressing

The Master initiates data transfer by creating a START condition on the bus. The Master then broadcasts an 8−bit serial Slave address. The first 4 bits of the Slave address are set to 1010, for normal Read/Write operations (Figure 4). The next 3 bits are set to 0 0 1. The last bit, R/$\overline{W}$, specifies whether a Read (1) or Write (0) operation is to be performed.

Acknowledge

After processing the Slave address, the Slave responds with an acknowledge (ACK) by pulling down the SDA line during the 9th clock cycle (Figure 5). The Slave will also acknowledge all address bytes and every data byte presented in Write mode if the addressed location is not write protected. In Read mode the Slave shifts out a data byte, and then releases the SDA line during the 9th clock cycle. As long as the Master acknowledges the data, the Slave will continue transmitting. The Master terminates the session by not acknowledging the last data byte (NoACK) and by issuing a STOP condition. Bus timing is illustrated in Figure 6.

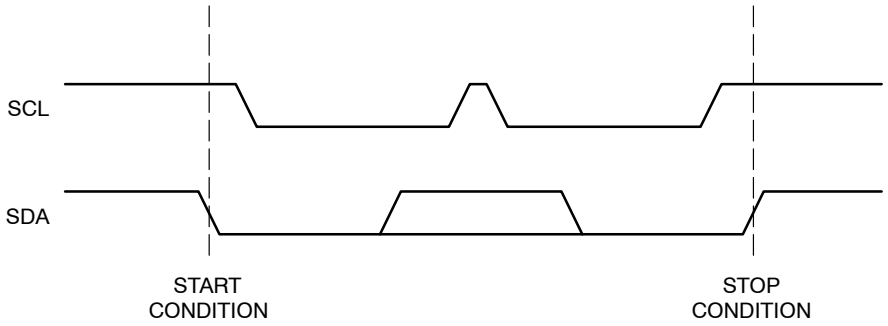

Figure 3. START/STOP Conditions

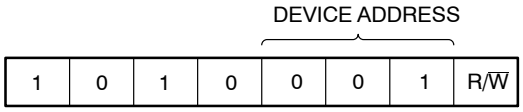

Figure 4. Slave Address Bits

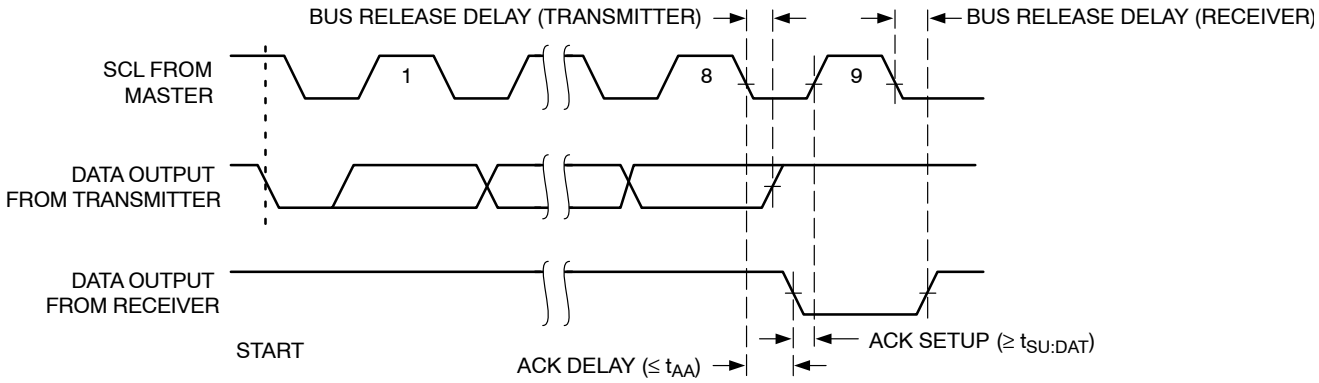

Figure 5. Acknowledge Timing

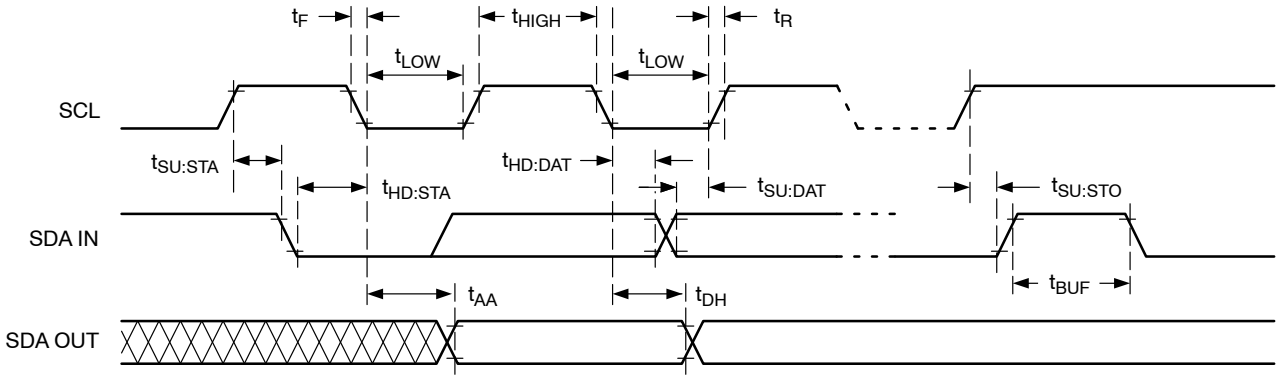

Figure 6. Bus Timing

Write Operations

Byte Write

In Byte Write mode the Master sends a START, followed by Slave address, two byte address (Table 8) and data to be written (Figure 7). The Slave, CAT24S128 acknowledges all 4 bytes, and the Master then follows up with a STOP, which in turn starts the internal Write operation (Figure 8). During the internal Write cycle (t_{WR}), the CAT24S128 will not acknowledge any Read or Write request from the Master.

Page Write

The CAT24S128 contains 16,384 bytes of data, arranged in 256 pages of 64 bytes each. A two byte address word (Table 8), following the Slave address, points to the first byte to be written into the memory array. The most significant 8 bits from the address active bits (a13 to a6) identify the page and the last 6 bits (a5 to a0) identify the byte within the page. Up to 64 bytes can be written in one Write cycle (Figure 9). The internal byte address counter is automatically incremented after each data byte is loaded. If the Master transmits more than 64 data bytes, then earlier bytes will be overwritten by later bytes in a 'wrap−around' fashion (within the selected page). The internal Write cycle starts immediately following the STOP.

Acknowledge Polling

The ready/busy status of the CAT24S128 can be ascertained by sending Read or Write requests immediately following the STOP condition that initiated the internal Write cycle. As long as internal Write is in progress, the CAT24S128 will not acknowledge the Slave address.

Software Write Protection

The user can select to write-protect partial or full memory array by writing a specific data into the Write Protect Register (WPR). The WPR is located outside of the 16K bytes memory addressing space, at address 1xxx xxxx xxxx xxxx.

The software write protect control bits from the Write Protect Register are shown in Table 9. The write protect control bits, b0 to b3 are non-volatile.

The WPEN (Write Protect Enable) bit enables the write protection when it is set to "1". When the WPEN bit is "0", the whole memory array can be written.

The BP0 and BP1 (Block Protect) bits determine which area is write protected. The user can select to protect a quarter, one half, three quarters or the entire memory by setting these bits according to Table 10. The protected blocks then become read-only.

The least significant bit from the Write Protect Register, WPL allows the user to lock the write protection status. When the WPL bit is set to "1" the control bits, b0 to b3 from WPR cannot be modified. Therefore the protected blocks can be permanently protected. If WPL bit is "0" the status of control bits from the WPR can be changed.

The CAT24S128 will not acknowledge the data byte and the write request will be rejected for the addresses located in the protected area.

NOTE: Once the WPL bit is set to "1", the user can no longer modify the WPR bits, therefore the write protection status is permanently locked.

Table 8. BYTE ADDRESS

	A15	A14	A13	A12	A11	A10	A9	A8	A7	A6	A5	A4	A3	A2	A1	A0
Memory Array	0	x	a13	a12	a11	a10	a9	a8	a7	a6	a5	a4	a3	a2	a1	a0
Write Protect Register	1	x	x	x	x	x	x	x	x	x	x	x	x	x	x	x

Table 9. WRITE PROTECT REGISTER

b7	b6	b5	b4	b3	b2	b1	b0
0	0	0	0	WPEN	BP1	BP0	WPL

Table 10. BLOCK PROTECTION

BP1	BP0	Array Address Protected	Protection
0	0	3000 - 3FFF	Upper Quarter Protection
0	1	2000 - 3FFF	Upper Half Protection
1	0	1000 - 3FFF	Upper 3/4 Array Protection
1	1	0000 - 3FFF	Full Array Protection

Writing the Write Protect Register

The write operation to the Write Protect Register is performed using a Byte Write instruction (Figure 7) at address 1xxx xxxx xxxx xxxx. The data byte contains the 4 least significant bits as significant bits. The b7 to b4 bits are don't care during the write operation. Sending more than one data byte will cancel the write cycle (Write Protect Register content will not be changed).

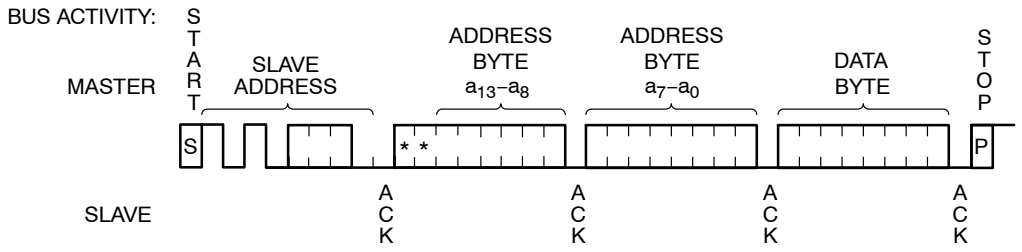

* A15 = 0 for Memory Array access; A15 = 1 for Write Protect Register access
A14 = Don't Care bit

Figure 7. Byte Write Sequence

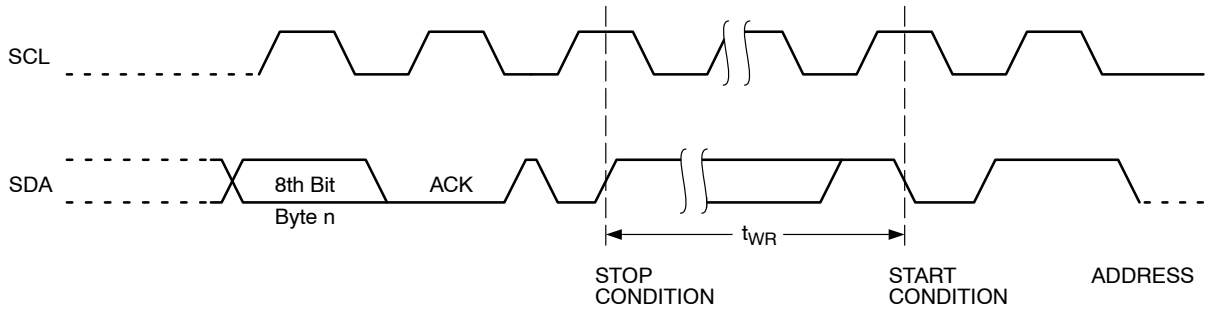

Figure 8. Write Cycle Timing

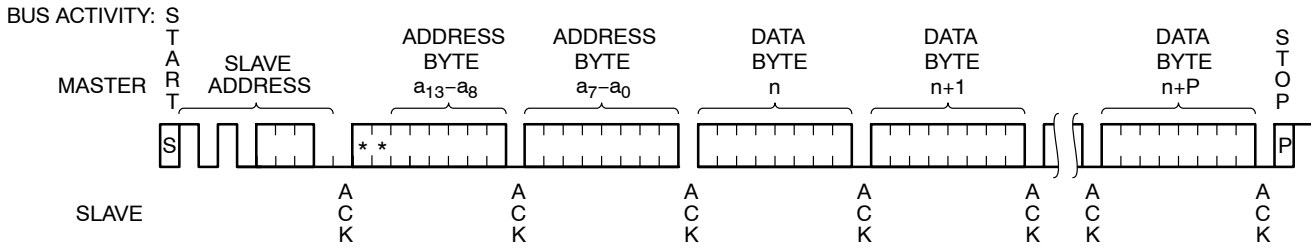

* A15 = 0 for Memory Array access; A15 = 1 for Write Protect Register access
A14 = Don't Care bit
P ≤ 63

Figure 9. Page Write Sequence

Read Operations

Immediate Read

Upon receiving a Slave address with the R/$\overline{W}$ bit set to '1', the CAT24S128 will interpret this as a request for data residing at the current byte address in memory. The CAT24S128 will acknowledge the Slave address, will immediately shift out the data residing at the current address, and will then wait for the Master to respond. If the Master does not acknowledge the data (NoACK) and then follows up with a STOP condition (Figure 10), the CAT24S128 returns to Standby mode.

Selective Read

To read data residing at a specific location, the internal address counter must first be initialized as described under Byte Write. If rather than following up the two address bytes with data, the Master instead follows up with an Immediate Read sequence, then the CAT24S128 will use the 14 active address bits to initialize the internal address counter and will shift out data residing at the corresponding location. If the Master does not acknowledge the data (NoACK) and then follows up with a STOP condition (Figure 11), the CAT24S128 returns to Standby mode.

Sequential Read

If during a Read session the Master acknowledges the 1st data byte, then the CAT24S128 will continue transmitting data residing at subsequent locations until the Master responds with a NoACK, followed by a STOP (Figure 12). In contrast to Page Write, during Sequential Read the address count will automatically increment to and then wrap−around at end of memory (rather than end of page).

Write Protect Register Read

To read the Write Protect Register, the master simply sends a Selective Read instruction (Figure 12) at address 1xxx xxxx xxxx xxxx. The data byte shifted out by the device shows the content of the WPR according to Table 9. If the master acknowledges the data byte and send more clocks, the WPR content will continue to be read out.

Delivery State

The CAT24S128 is shipped erased, i.e., all memory array bytes are FFh and the Write Protect Register bits set to 0 (00h).

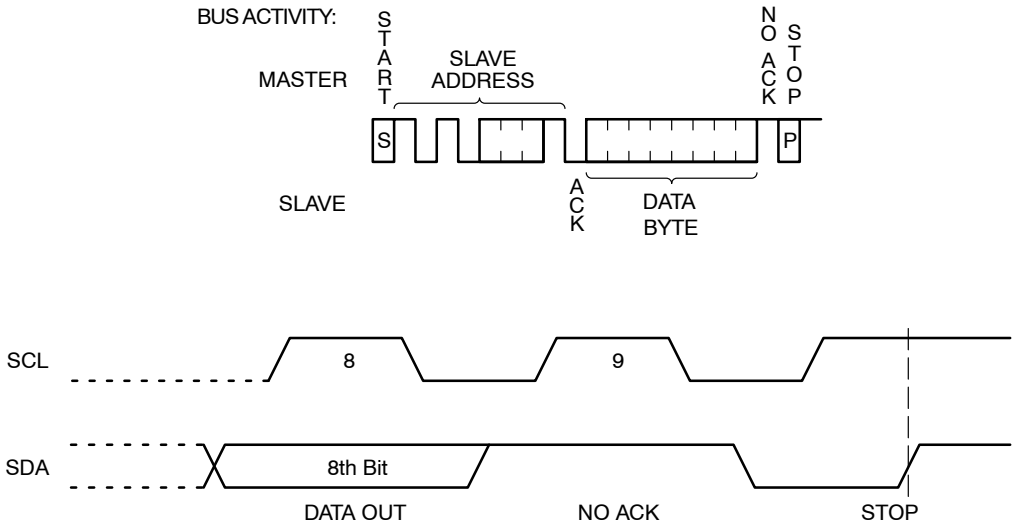

Figure 10. Immediate Read Sequence and Timing

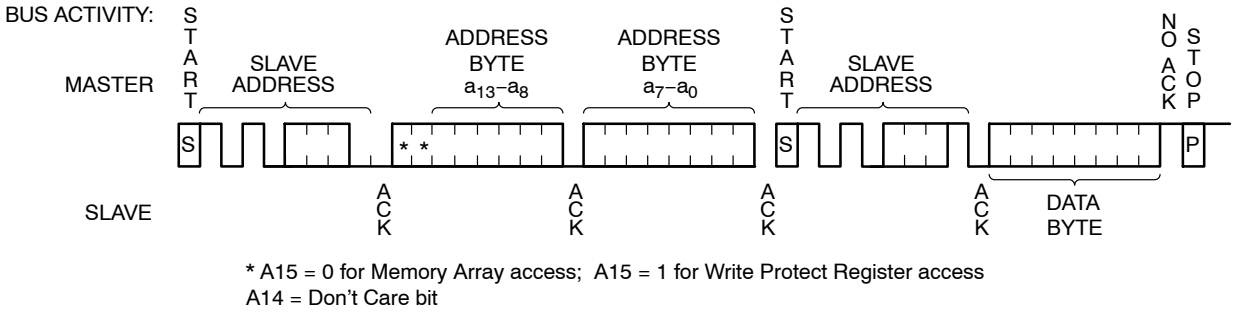

* A15 = 0 for Memory Array access; A15 = 1 for Write Protect Register access
A14 = Don't Care bit

Figure 11. Selective Read Sequence

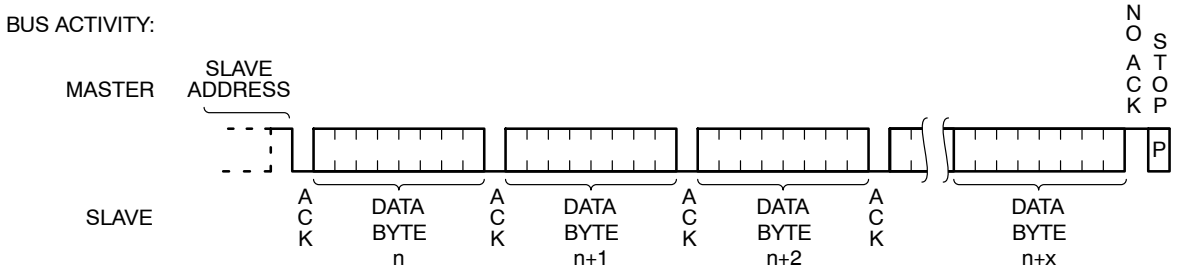

Figure 12. Sequential Read Sequence

ORDERING INFORMATION (Notes 9 thru 12)

Device Order Number	Specific Device Marking	Package Type	Temperature Range	Lead Finish	Shipping
CAT24S128C4ATR	E	WLCSP 4−ball	Industrial (−40°C to +85°C)	N/A	Tape & Reel, 5,000 Units / Reel
CAT24S128C4UTR	E	WLCSP 4−ball	Industrial (−40°C to +85°C)	N/A	Tape & Reel, 5,000 Units / Reel

9. All packages are RoHS−compliant (Lead−free, Halogen−free).
10. For information on tape and reel specifications, including part orientation and tape sizes, please refer to our Tape and Reel Packaging Specifications Brochure, BRD8011/D.
11. For detailed information and a breakdown of device nomenclature and numbering systems, please see the ON Semiconductor Device Nomenclature document, TND310/D, available at www.onsemi.com
12. **Caution: The EEPROM devices delivered in WLCSP must never be exposed to ultraviolet light. When exposed to ultraviolet light the EEPROM cells lose their stored data.**

ON Semiconductor is licensed by the Philips Corporation to carry the I^2C bus protocol.

PACKAGE DIMENSIONS

WLCSP4, 0.84x0.84
CASE 567KV
ISSUE B

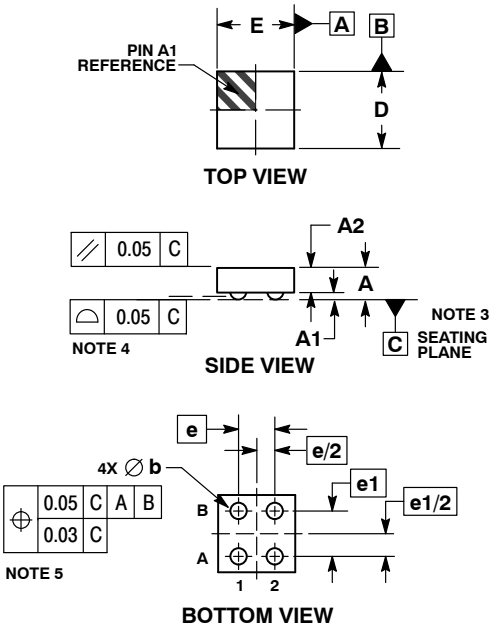

NOTES:
1. DIMENSIONING AND TOLERANCING PER ASME Y14.5M, 1994.
2. CONTROLLING DIMENSION: MILLIMETERS.
3. DATUM C, THE SEATING PLANE, IS DEFINED BY THE SPHERICAL CROWNS OF THE CONTACT BALLS.
4. COPLANARITY APPLIES TO SPHERICAL CROWNS OF THE SOLDER BALLS.
5. DIMENSION b IS MEASURED AT THE MAXIMUM CONTACT BALL DIAMETER PARALLEL TO DATUM C.

	MILLIMETERS		
DIM	MIN	NOM	MAX
A	---	---	0.35
A1	0.08	0.10	0.12
A2		0.23 REF	
b	0.16	0.18	0.20
D	0.81	0.84	0.87
E	0.81	0.84	0.87
e		0.40 BSC	
e1		0.50 BSC	

RECOMMENDED SOLDERING FOOTPRINT*

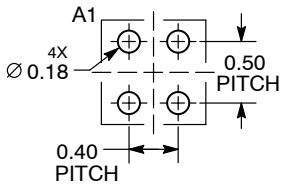

DIMENSIONS: MILLIMETERS

*For additional information on our Pb−Free strategy and soldering details, please download the ON Semiconductor Soldering and Mounting Techniques Reference Manual, SOLDERRM/D.

MECHANICAL CASE OUTLINE
PACKAGE DIMENSIONS

ON Semiconductor®

SCALE 4:1

WLCSP4, 0.84x0.84
CASE 567PC
ISSUE A

DATE 30 MAY 2017

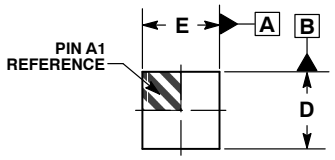

TOP VIEW

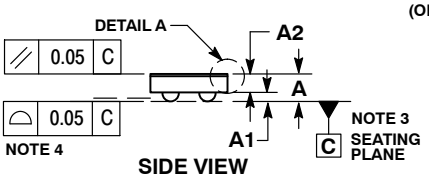

SIDE VIEW

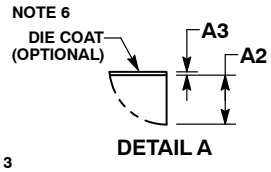

DETAIL A

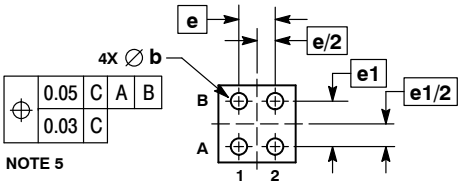

BOTTOM VIEW

RECOMMENDED SOLDERING FOOTPRINT*

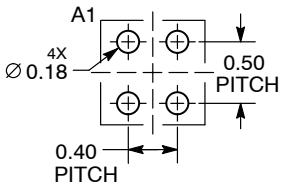

DIMENSIONS: MILLIMETERS

*For additional information on our Pb−Free strategy and soldering details, please download the ON Semiconductor Soldering and Mounting Techniques Reference Manual, SOLDERRM/D.

NOTES:
1. DIMENSIONING AND TOLERANCING PER ASME Y14.5M, 1994.
2. CONTROLLING DIMENSION: MILLIMETERS.
3. DATUM C, THE SEATING PLANE, IS DEFINED BY THE SPHERICAL CROWNS OF THE SOLDER BALLS.
4. COPLANARITY APPLIES TO THE SPHERICAL CROWNS OF THE SOLDER BALLS.
5. DIMENSION b IS MEASURED AT THE MAXIMUM CONTACT BALL DIAMETER PARALLEL TO DATUM C.
6. BACKSIDE COATING IS OPTIONAL.

	MILLIMETERS		
DIM	MIN	NOM	MAX
A	−−−	−−−	0.30
A1	0.08	0.10	0.12
A2		0.15 REF	
A3		0.025 REF	
b	0.16	0.18	0.20
D	0.81	0.84	0.87
E	0.81	0.84	0.87
e		0.40 BSC	
e1		0.50 BSC	

GENERIC MARKING DIAGRAM*



X = Specific Device Code
Y = Year
W = Work Week

*This information is generic. Please refer to device data sheet for actual part marking. Pb−Free indicator, “G” or microdot “ ▪”, may or may not be present. Some products may not follow the Generic Marking.

DOCUMENT NUMBER:	**98AON12766G**	Electronic versions are uncontrolled except when accessed directly from the Document Repository. Printed versions are uncontrolled except when stamped “CONTROLLED COPY” in red.
DESCRIPTION:	**WLCSP4, 0.84X0.84**	**PAGE 1 OF 1**

ON Semiconductor and ON are trademarks of Semiconductor Components Industries, LLC dba ON Semiconductor or its subsidiaries in the United States and/or other countries. ON Semiconductor reserves the right to make changes without further notice to any products herein. ON Semiconductor makes no warranty, representation or guarantee regarding the suitability of its products for any particular purpose, nor does ON Semiconductor assume any liability arising out of the application or use of any product or circuit, and specifically disclaims any and all liability, including without limitation special, consequential or incidental damages. ON Semiconductor does not convey any license under its patent rights nor the rights of others.

© Semiconductor Components Industries, LLC, 2019

ON Semiconductor and ON are trademarks of Semiconductor Components Industries, LLC dba ON Semiconductor or its subsidiaries in the United States and/or other countries. ON Semiconductor owns the rights to a number of patents, trademarks, copyrights, trade secrets, and other intellectual property. A listing of ON Semiconductor's product/patent coverage may be accessed at www.onsemi.com/site/pdf/Patent−Marking.pdf. ON Semiconductor reserves the right to make changes without further notice to any products herein. ON Semiconductor makes no warranty, representation or guarantee regarding the suitability of its products for any particular purpose, nor does ON Semiconductor assume any liability arising out of the application or use of any product or circuit, and specifically disclaims any and all liability, including without limitation special, consequential or incidental damages. Buyer is responsible for its products and applications using ON Semiconductor products, including compliance with all laws, regulations and safety requirements or standards, regardless of any support or applications information provided by ON Semiconductor. "Typical" parameters which may be provided in ON Semiconductor data sheets and/or specifications can and do vary in different applications and actual performance may vary over time. All operating parameters, including "Typicals" must be validated for each customer application by customer's technical experts. ON Semiconductor does not convey any license under its patent rights nor the rights of others. ON Semiconductor products are not designed, intended, or authorized for use as a critical component in life support systems or any FDA Class 3 medical devices or medical devices with a same or similar classification in a foreign jurisdiction or any devices intended for implantation in the human body. Should Buyer purchase or use ON Semiconductor products for any such unintended or unauthorized application, Buyer shall indemnify and hold ON Semiconductor and its officers, employees, subsidiaries, affiliates, and distributors harmless against all claims, costs, damages, and expenses, and reasonable attorney fees arising out of, directly or indirectly, any claim of personal injury or death associated with such unintended or unauthorized use, even if such claim alleges that ON Semiconductor was negligent regarding the design or manufacture of the part. ON Semiconductor is an Equal Opportunity/Affirmative Action Employer. This literature is subject to all applicable copyright laws and is not for resale in any manner.

PUBLICATION ORDERING INFORMATION

LITERATURE FULFILLMENT:
Email Requests to: orderlit@onsemi.com

ON Semiconductor Website: www.onsemi.com

TECHNICAL SUPPORT
North American Technical Support:
Voice Mail: 1 800−282−9855 Toll Free USA/Canada
Phone: 011 421 33 790 2910

Europe, Middle East and Africa Technical Support:
Phone: 00421 33 790 2910
For additional information, please contact your local Sales Representative

◊