Photomicrosensor (Reflective)

EE-SY171

Compact Reflective Type (Standard Sensing Distance = 3.5 mm)

- Thin type with 3 mm height

Be sure to read *Safety Precautions* on Page 3.

Ordering Information

Photomicrosensor

Appearance	Sensing method	Connecting method	Standard sensing distance	Output type	Model	Minimum packing unit (Unit: pcs)
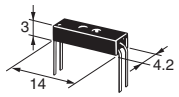	Reflective	Terminal for PCB mounting	3.5 mm	Phototransistor	**EE-SY171**	1

Note: Order in multiples of minimum packing unit.

Ratings, Characteristics and Exterior Specifications

Absolute Maximum Ratings (Ta = 25°C)

Item		Symbol	Rated value	Unit
Emitter				
	Forward current	I_F	50*1	mA
	Pulse forward current	I_{FP}	1*2	A
	Reverse voltage	V_R	4	V
Detector				
	Collector-Emitter voltage	V_{CEO}	30	V
	Emitter-Collector voltage	V_{ECO}	—	V
	Collector current	I_C	20	mA
	Collector dissipation	P_C	100*1	mW
Operating temperature		T_{opr}	-40 to 85	°C
Storage temperature		T_{stg}	-40 to 85	°C
Soldering temperature		T_{sol}	260*3	°C

*1. Refer to the temperature rating chart if the ambient temperature exceeds 25°C.
*2. Pulse width ≤ 10 µs, Repeated 100 Hz
*3. Complete soldering within 10 seconds.

Exterior Specifications

Connecting method	Weight (g)	Material
		Case
Terminal for PCB mounting	0.3	Polycarbonate

Electrical and Optical Characteristics (Ta = 25°C)

Item		Symbol	Value			Unit	Condition
			MIN.	TYP.	MAX.		
Emitter							
	Forward voltage	V_F	—	1.2	1.5	V	I_F = 30 mA
	Reverse current	I_R	—	0.01	10	µA	V_R = 4 V
	Peak emission wavelength	λ_P	—	940	—	nm	I_F = 20 mA
Detector							
	Light current	I_L	50	—	500	µA	I_F = 20 mA, V_{CE} = 10 V Reflectance 90% white paper d = 3.5 mm*
	Dark current	I_D	—	2	200	nA	V_{CE} = 10 V, 0 lx
	Leakage current	I_{LEAK}	—	—	200	nA	I_F = 20 mA, V_{CE} = 10 V Non-reflective state
	Collector-Emitter saturated voltage	V_{CE} (sat)	—	—	—	V	—
	Peak spectral sensitivity wavelength	λ_P	—	850	—	nm	V_{CE} = 10 V
Rising time		tr	—	30	—	µs	V_{CC} = 5 V, R_L = 1 kΩ I_L = 1 mA
Falling time		tf	—	30	—	µs	V_{CC} = 5 V, R_L = 1 kΩ I_L = 1 mA

* "d" is the distance from the top of the sensor to the reflective surface

Engineering Data (Reference Value)

Fig 1. Forward Current vs. Collector Dissipation Temperature Rating

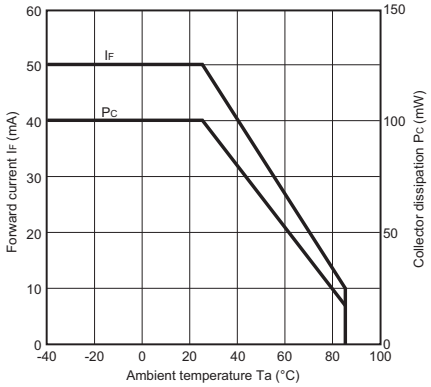

Fig 2. Light Current vs. Forward Current Characteristics (Typical)

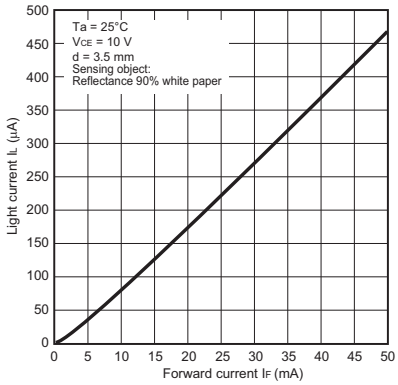

Fig 3. Light Current vs. Collector-Emitter Voltage Characteristics (Typical)

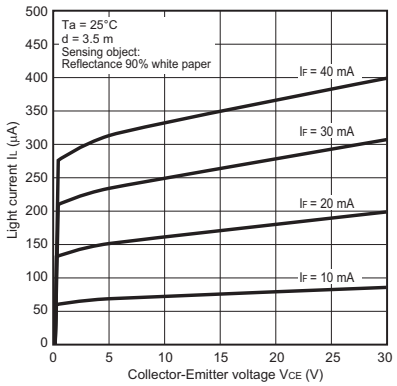

Fig 4. Relative Light Current vs. Ambient Temperature Characteristics (Typical)

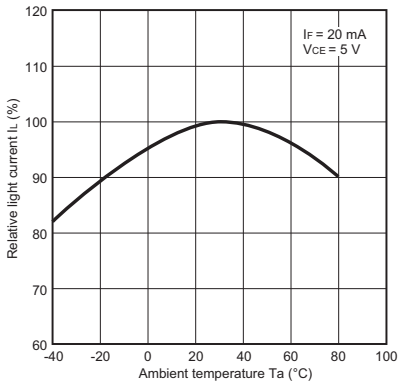

Fig 5. Dark Current vs. Ambient Temperature Characteristics (Typical)

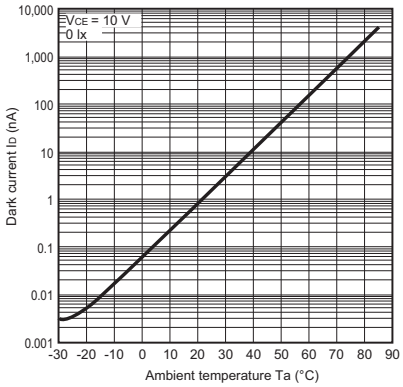

Fig 6. Response Time vs. Load Resistance Characteristics (Typical)

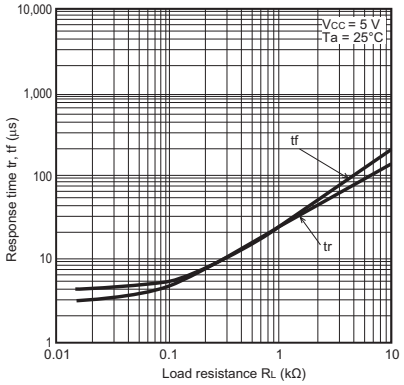

Fig 7. Sensing Distance Characteristics (Typical)

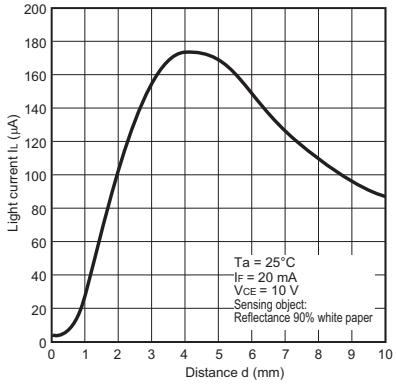

Fig 8. Sensing Position Characteristics (Typical)

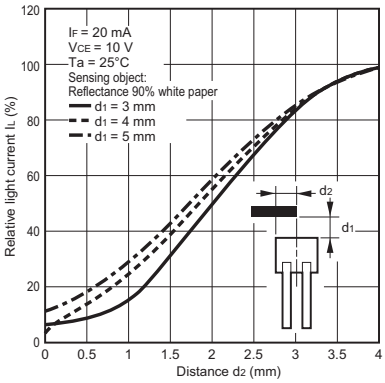

Fig 9. Sensing Angle Characteristics (Typical)

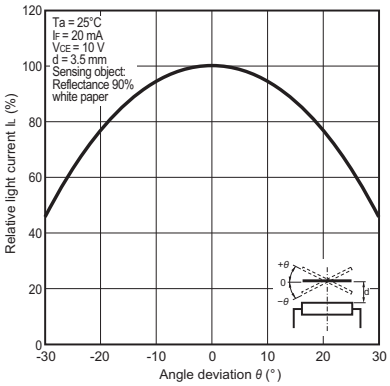

Fig 10. Response Time Measurement Circuit

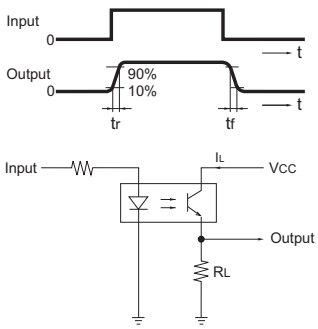

Safety Precautions

To ensure safe operation, be sure to read and follow the Instruction Manual provided with the Sensor.

⚠ CAUTION

This product is not designed or rated for ensuring safety of persons either directly or indirectly.
Do not use it for such purposes.

Precautions for Correct Use

Do not use the product in atmospheres or environments that exceed product ratings.

Precautions for Safe Use

Do not use the product with a voltage or current that exceeds the rated range.

Applying a voltage or current that is higher than the rated range may result in explosion or fire.

Do not miswire such as the polarity of the power supply voltage.

Otherwise the product may be damaged or it may burn.

This product does not resist water. Do not use the product in places where water or oil may be sprayed onto the product.

Dimensions and Internal Circuit

(Unit: mm)

Photomicrosensor

EE-SY171

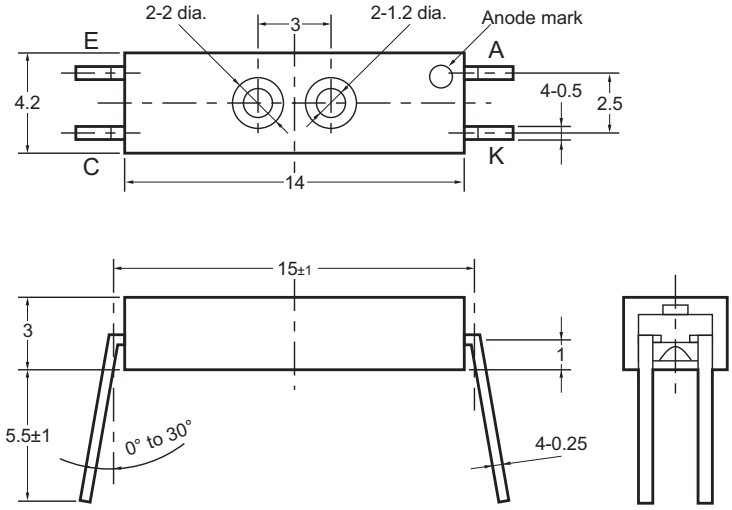

Internal circuit

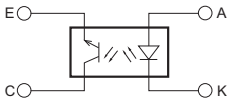

Terminal No.	Name
A	Anode
K	Cathode
C	Collector
E	Emitter

Unless otherwise specified, the tolerances are as shown below.

Dimensions	Tolerance
3 mm max.	±0.3
3 < mm ≤ 6	±0.375
6 < mm ≤ 10	±0.45
10 < mm ≤ 18	±0.55
18 < mm ≤ 30	±0.65

Please check each region's Terms & Conditions by region website.

OMRON Corporation
Device & Module Solutions Company

Regional Contact

Americas
https://components.omron.com/us

Europe
https://components.omron.com/eu

Asia-Pacific
https://components.omron.com/ap

China
https://components.omron.com.cn

Korea
https://components.omron.com/kr

Japan
https://components.omron.com/jp

© OMRON Corporation 2018-2022 All Rights Reserved.
In the interest of product improvement, specifications are subject to change without notice.

Cat. No. E564-E1-02
1122 (0318)