C11WAM-P17XMM0-0000

ODU AMC® HD

Straight screw-lock plug for bend relief

Size 1, IP6K8 / IP6K9K, Coding A (light brown), 17 contacts, Pins, Solder cup, Data transmission

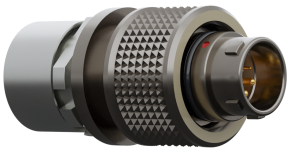

Basic information

Part number	C11WAM-P17XMM0-0000
Category	Connector
Type of connector	Plug
Assembly situation	Straight
Size	1

Contact insert description

Special features	Data transmission
Transmission type	HDMI® 1.4 (10.2 Gbit/s)
Number of contacts	17
Contact type	Pins
Contact diameter	0.3 mm; 0.7 mm
Termination type	Solder cup
Termination diameter	0.45 mm
Wire cross section AWG	AWG 28; AWG 22

Reverse gender on request

Technical information

Max. current single contact	1 A	IEC 60512-5-2:2002 (DIN EN 60512-5-2:2003)
Test voltage	0.75 kV DC	EIA-364-20F:2019-02

All shown connectors are rated to a safety extra low voltage (SELV) of less than 50 V AC / 75 V DC, according to IEC 61140:2016 (VDE 0140-1:2016) Protection against electric shock - Common aspects for installation and equipment. In case other standards rule a specific use of the connector, the application specific safety criteria shall be considered first. In this context, lower voltage ratings may be valid. Warning: Danger to life for operating voltages above 50 V AC / 120 V DC!

Cable description

Cable outlet	Overmolding
Min. cable diameter	3.2
Max. cable diameter	8.5

Mechanical and environmental data

Locking principle	Screw-Lock
Keying	A
Mating cycles	5.000
IP class	IP68 / IP6K9K
Max. operating temperature	125 °C
Min. operating temperature	-51 °C
Weight	14.3 g

*IP protection class refers to mated condition

Material and surface treatments

Material	Cu-alloy with ruthenium finish
Insulator material	PEEK
Contact material	Gold

ODU MEDI-SNAP® and MINI-SNAP® are UL-approved (E110586).
ODU reserves the right to make changes based on the current state of knowledge without prior notice without being obliged to provide replacement deliveries or refinements of older designs.
All shown connectors are defined without breaking capacity (COC) according to IEC 61984:2008 (VDE 0627:2009).

Graphics and technical drawings

DIMENSIONS:

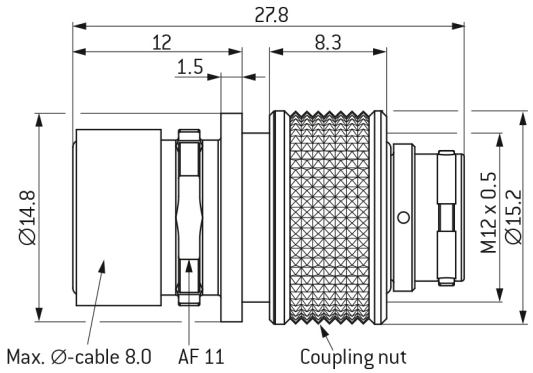

CODING:A

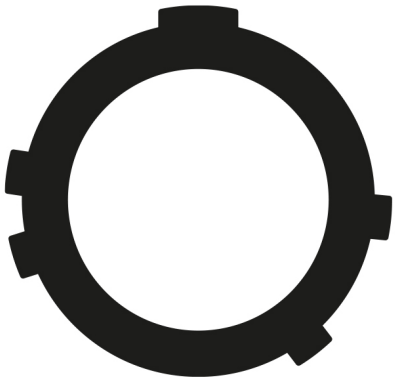

17 Positions

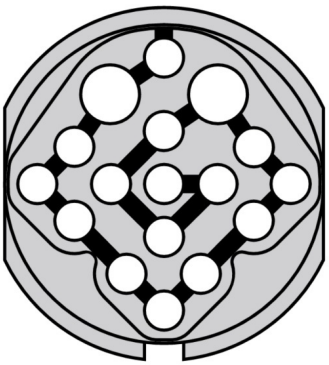

Further technical information and downloads

	Pos. ODU®	Pos. HDMI®	Signal
Connection diagram	4	9	D0–
	2	8, 11	Drain wire
	14	7	D0+
	10	4	D1+
	12	2, 5	Drain wire
	16	6	D1–
	11	1	D2+
	12	2, 5	Drain wire
	9	3	D2–
	3	12	C–
	2	8, 11	Drain wire
	5	10	C+
	6	14	HEC D–
	15	17	Drain wire
	8	19	HEC D+
	7	13	CEC
	1	15	SCL
	13	16	SDA
	17	18	+5V Power
	Housing	Shield	

3D-File (STP File)

Assembly Instruction

Technical specifications