PIANO SWITCHES (HALF PITCH) CHP

RoHS compliant

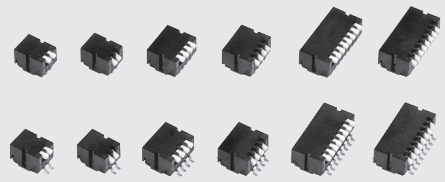

INTERNAL STRUCTURE

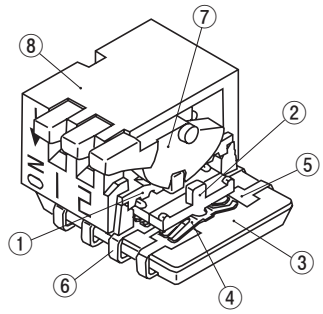

Part name		Material
①	Cover	Polyphenylenesulfide
②	Slider	Polyamide
③	Housing	Polyphenylenesulfide
④	Slider contact	Stainless steel, Gold-plated
⑤	Fixed contact	Copper alloy, Gold-plated
⑥	Terminal pin	
⑦	Piano lever	Polyamide
⑧	Piano cover	Polyphenylenesulphide

FEATURES

- RoHS compliant
- High-reliability
- Resin material is UL Recognized 94V-0

APPLICATIONS

- Communication devices, AV • OA equipment and computer peripherals

PART NUMBER DESIGNATION

C H P - 0 4 0 T B

Series name

No. of bits

02 : 2 bits
04 : 4 bits
08 : 8 bits

ON direction

0 : Upper
1 : Lower

Form of packaging

T : Taping (Reel)
Blank : Bulk in plastic bag

Shape of terminal

A : JJ-hook
B : Gull wing

※ Please refer to the LIST OF PART NUMBERS when placing orders.

CHP
PIANO SWITCHES (HALF PITCH)

■ LIST OF PART NUMBERS

No. of bits	ON direction	Form of packaging	Shape of terminals		Packaging quantity
			A (J-hook)	B (Gull wing)	
2	Upper	Taping	CHP-020TA	CHP-020TB	500 pcs./reel
		Plastic bag	CHP-020A	CHP-020B	50 pcs./pack
	Lower	Taping	CHP-021TA	CHP-021TB	500 pcs./reel
		Plastic bag	CHP-021A	CHP-021B	50 pcs./pack
4	Upper	Taping	CHP-040TA	CHP-040TB	500 pcs./reel
		Plastic bag	CHP-040A	CHP-040B	50 pcs./pack
	Lower	Taping	CHP-041TA	CHP-041TB	500 pcs./reel
		Plastic bag	CHP-041A	CHP-041B	50 pcs./pack
8	Upper	Taping	CHP-080TA	CHP-080TB	500 pcs./reel
		Plastic bag	CHP-080A	CHP-080B	50 pcs./pack
	Lower	Taping	CHP-081TA	CHP-081TB	500 pcs./reel
		Plastic bag	CHP-081A	CHP-081B	50 pcs./pack

※ Verify the above part numbers when placing orders.
Taping version can be supplied only in reel units.

■ STANDARD SPECIFICATIONS

Operating temp. range	− 40 ～ 85 °C
Storage temp. range	
Sealing	Non-washable
Net weight	Approx. 0.16 g (CHP-02), Approx. 0.25 g (CHP-04), Approx. 0.43 g (CHP-08)

■ MECHANICAL CHARACTERISTICS

Operation angle	22 °
Operating force	5 N {0.51 kgf} maximum
Stop strength	10 N {1.02 kgf} 60 s
Solderability	245 ± 3 °C, 2 ～ 3 s
Soldering heat	Reflow : 255 °C (Peak temperature) Please refer to the profile below)
	Manual soldering : 350 ± 10 °C, 3 ~ 4 s
Shear (Adhesion)	5 N {0.51 kgf} 10 s
Substrate bending	Width 90 mm, bend 3 mm, 5 s, 1 time
Pull-off strength	5 N {0.51 kgf} 10 s

{ } : Reference only

■ ELECTRICAL CHARACTERISTICS

Contact rating Non-switching Switching Minimum	 DC50 V 100 mA DC6 V, 100 mA DC24 V, 25 mA DC20 mV 1 μA
Contact resistance	50 mΩ maximum
Insulation resistance	1000 MΩ (DC100 V) minimum
Dielectric strength	AC500 V, 60 s

■ ENVIRONMENTAL CHARACTERISTICS

Vibration	(Amplitude) 1.5 mm or (Acceleration) 98 m/s^2, 10-500 Hz, 3 directions for 10 cycles each
Shock	490 m/s^2, 11 ms 6 directions for 3 times each
Load life	Continuous load 1000 cycles, DC6 ± 0.5 V, 100 ± 10 mA
Humidity	−10 ～ 65 °C, Relative humidity 0 ～ 96 %, 24 h for 10 cycles
High temp. exposure	85 °C, 96 h
Low temp. exposure	−40 °C, 96 h
Thermal shock	−40 (0.5 h) ～ 85 °C (0.5 h), 5 cycles

〈Reflow profile for soldering heat evaluation〉

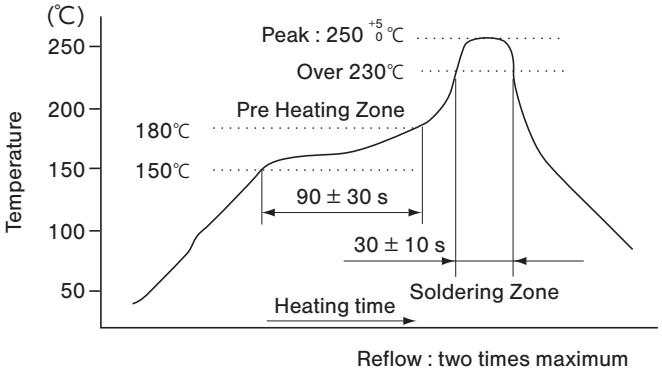

■ OUTLINE DIMENSIONS

Unless otherwise specified, tolerance : ± 0.3 (Unit : mm)

● CHP-020A

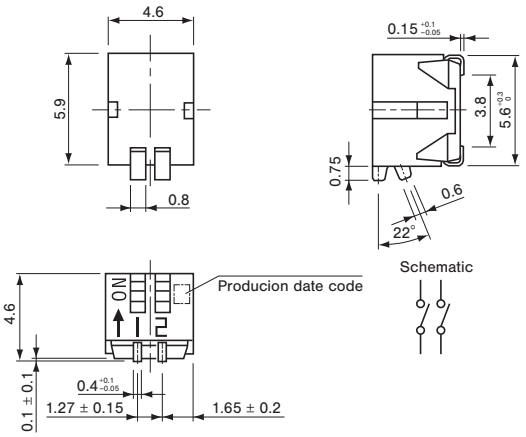

● CHP-021A

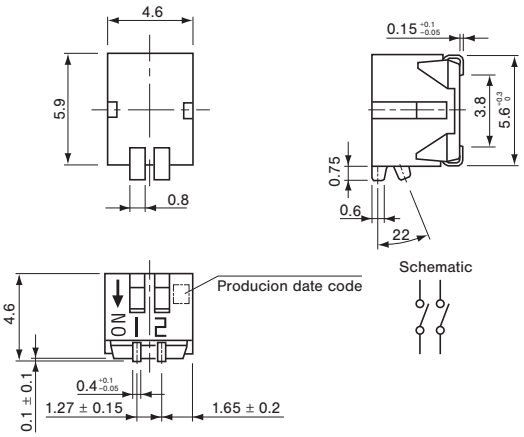

● CHP-020B

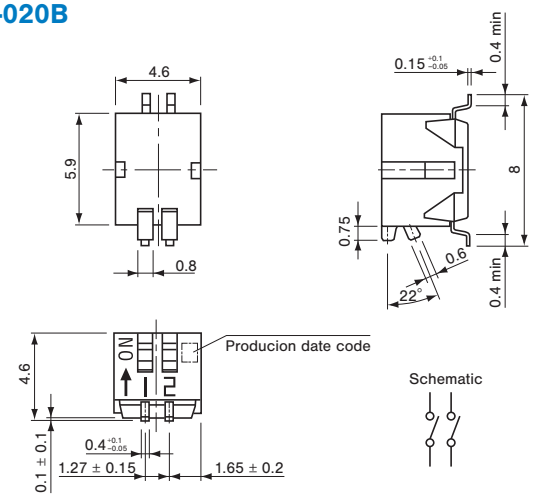

● CHP-021B

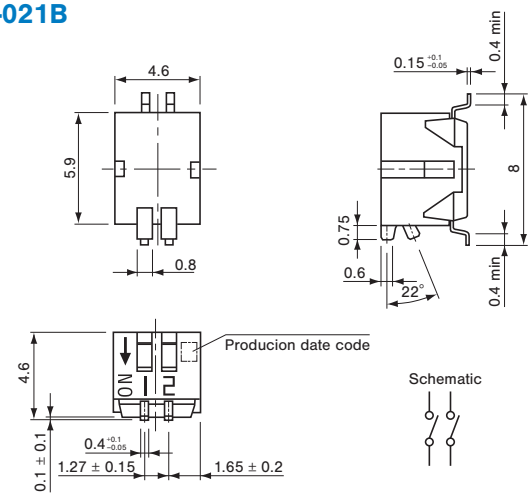

CHP
PIANO SWITCHES (HALF PITCH)

■ OUTLINE DIMENSIONS

Unless otherwise specified, tolerance : ± 0.3 (Unit : mm)

● CHP-040A

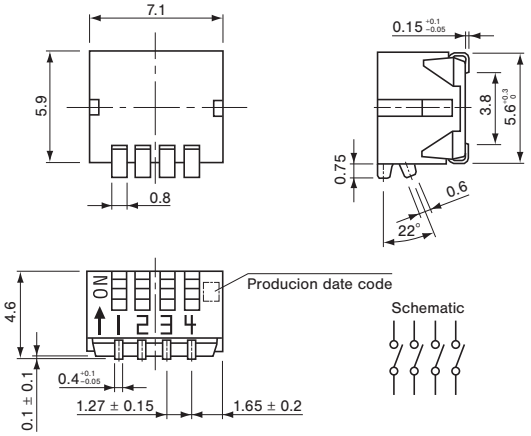

● CHP-041A

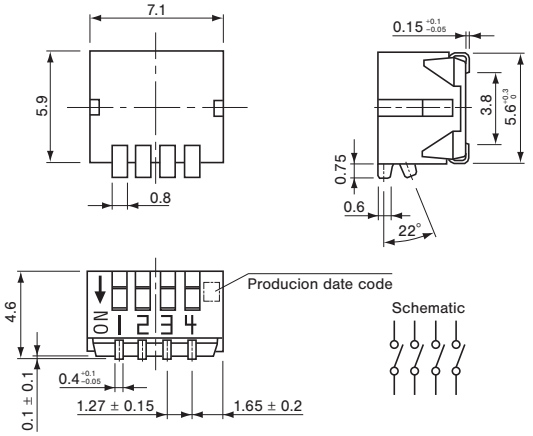

● CHP-040B

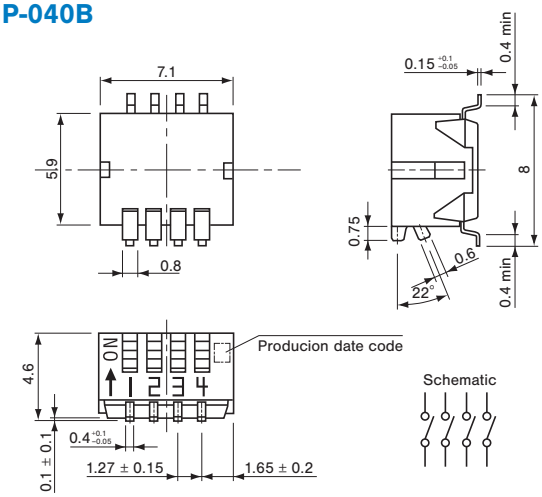

● CHP-041B

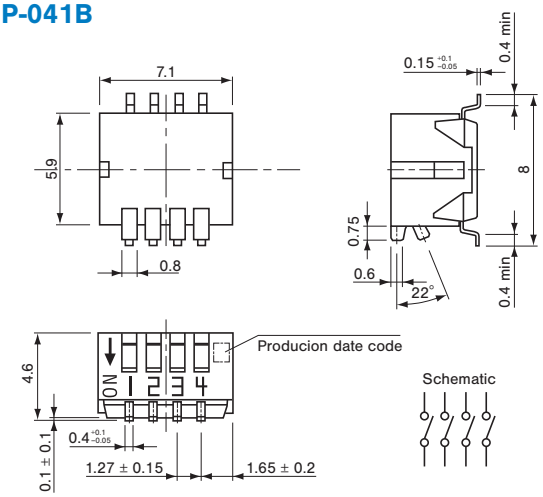

● CHP-080A

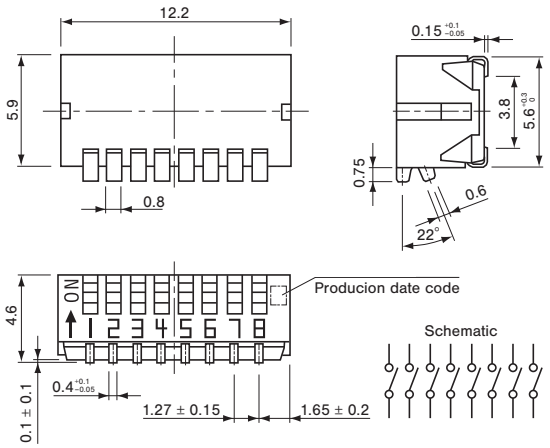

● CHP-081A

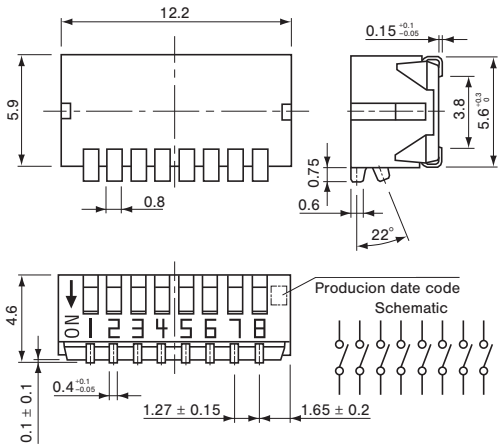

OUTLINE DIMENSIONS

Unless otherwise specified, tolerance : ± 0.3 (Unit : mm)

CHP-080B

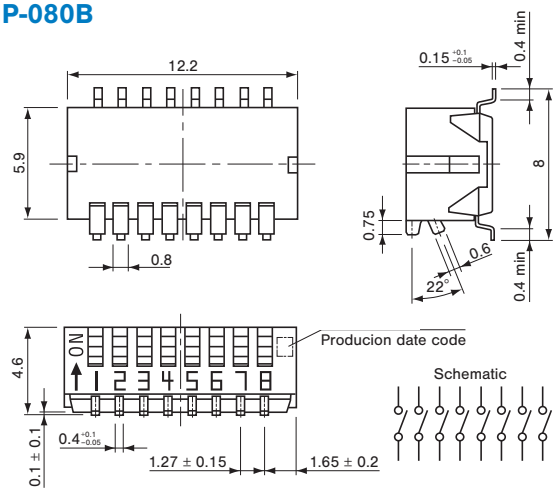

CHP-081B

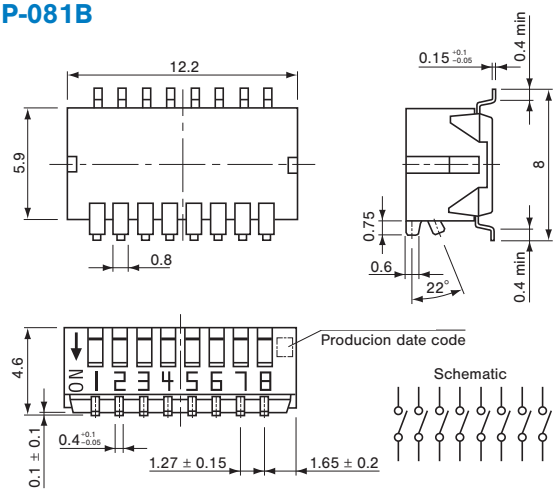

RECOMMENDED P.C.B. PAD DIMENSIONS

2 bits A type

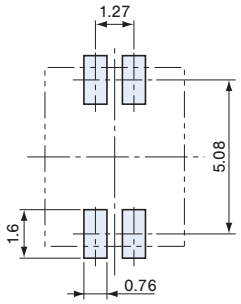

B type

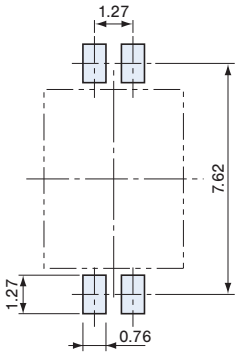

4 bits A type

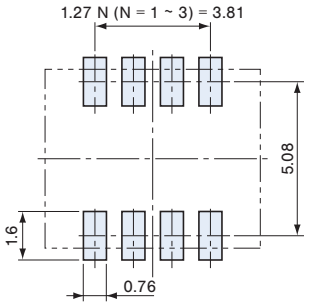

B type

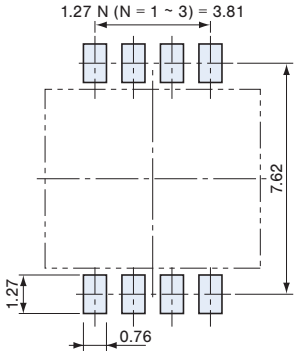

8 bits A type

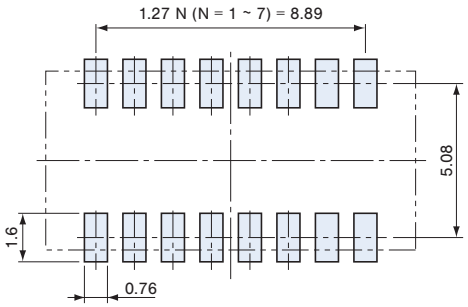

B type

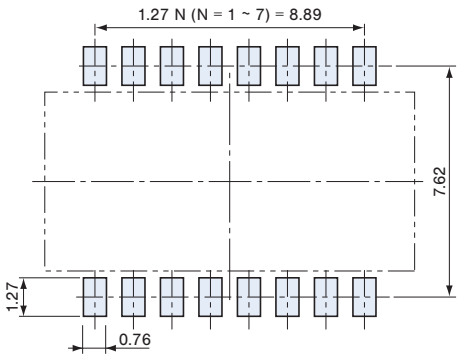

CHP
PIANO SWITCHES (HALF PITCH)

■ PACKAGING SPECIFICATIONS

<Taping packaging specifications>

- Taping version is packaged in 500 pcs. per reel. Orders will be accepted for units of 500 pcs., i.e., 500, 1000, 1500 pcs., etc.
- Taping version is boxed with two reels.

Maximum number of consecutive missing pieces=2
Leader length and reel dimension are shown in the diagrams below:

● Embossed tape dimensions

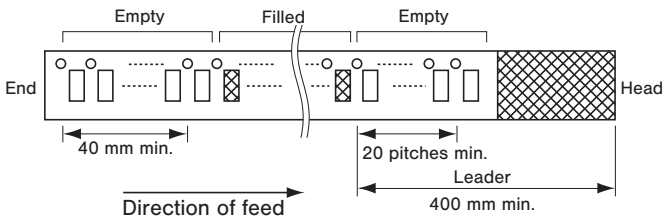

● Reel dimensions

(Unit: mm)

(Conforms to JIS C 0806-3)

(Eln accordance with EIAJ ET-7200A)

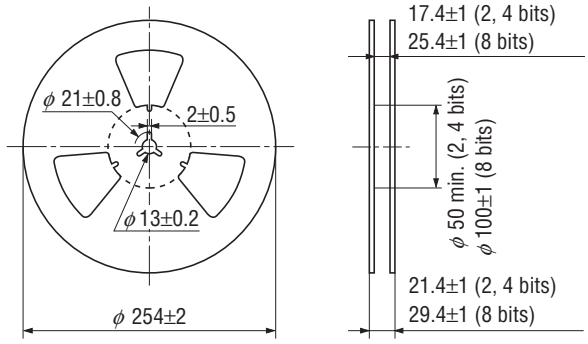

● 2 bits

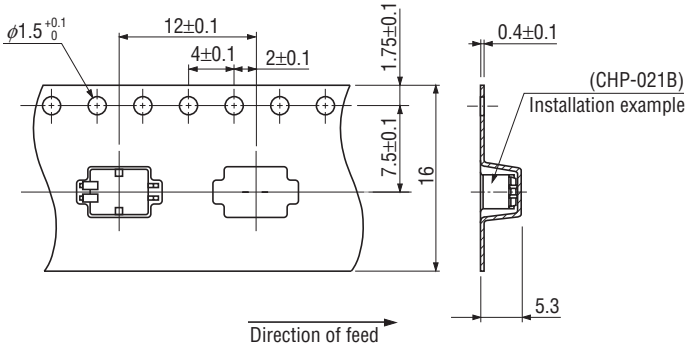

● 4 bits

(Unit : mm)

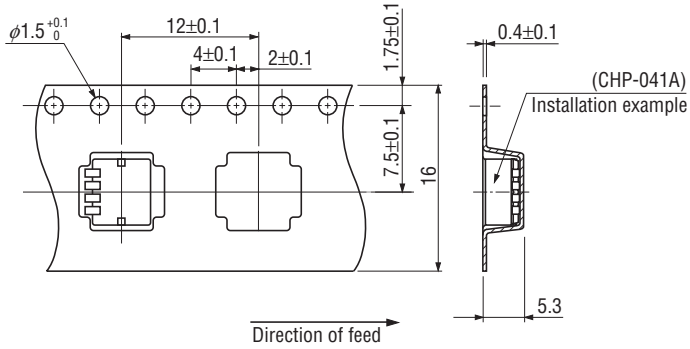

● 8 bits

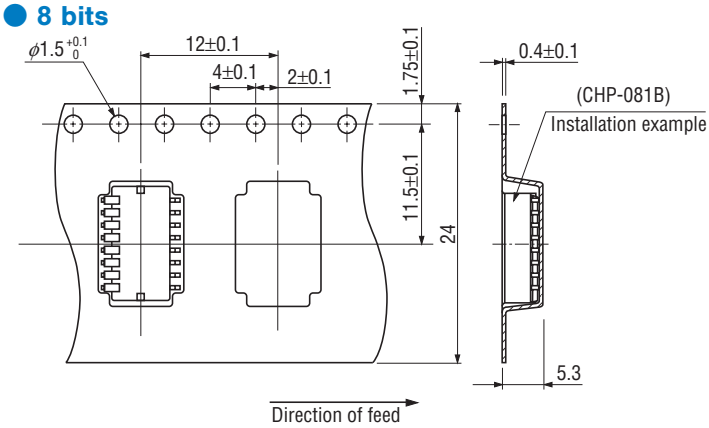

〈Bulk pack specifications〉

- Boxing of bulk in a plastic bag is performed with 50 pcs. (Standard 100 pcs.) per box.