NANE20X365FJS0R915G1F

915 MHz ISM/LoRa External Antenna

ROHS/REACH COMPLIANT HALOGEN FREE

COMPONENTS
Performance Passives By Design

Description

NANE20X365FJS0R915G1F is an External Fiberglass antenna designed for ISM applications. It operates within the frequency ranges of 860-928 MHz making it perfect for Hotspots, LoRaWAN and cellular Communication



Features

- ISM / LoRa 915 MHz Band
- Fiberglass Antenna
- Waterproof
- RoHs Complaint

Part Number Breakdown

NANE 20x365 F J S 0R915G 1 x A1 F

- **Series**
- **Size (in mm)**
- **Antenna Type**
  F = Fiberglass
- **Internal Production Code**
- **Protocol Code**
  S = ISM
- **Center Frequency**
- **Number of Frequency Bands**
- **Connector Type Code**
  N = N Male Connector
  L = N Female Connector
- **Assembly Code**
  Blank = Pole Mount Accessories
  A1 = Wall Mount Accessories
- **RoHS Compliant**

Part Number Options

Part Number	Protocol	Connector	Mount Accessories
NANE20X365FJS0R915G1NF	ISM/LoRa	N Male	Pole Mount
NANE20X365FJS0R915G1LF	ISM/LoRa	N Female	Pole Mount
NANE20X365FJS0R915G1LA1F	ISM/LoRa	N Female	Wall Mount

The table represents assembled part numbers available on www.niccomp.com. For options not listed above please contact NIC

Specifications

Electrical	
Frequency Range	860-928MHz
Bandwidth	±10MHz
Polarization	Vertical
Gain	3.5 dB
V.S.W.R	≤ 3
Radiation Direction	Omnidirectional
Half Power Corner	H: 360 V: 16.5
Max Input Power	100 W
Impedance	50Ω
Environmental & Mechanical	
Operating Temperature -	-40°C~+60°C
Lightning protection	DC Ground
Wind resistance	60m/s
Weight	0.21kg
Radome	Fiberglass
Color	White
Mouthing Method	U bracket
Mounting Hardware	Φ 35~Φ 50 mm

Dimension Drawing

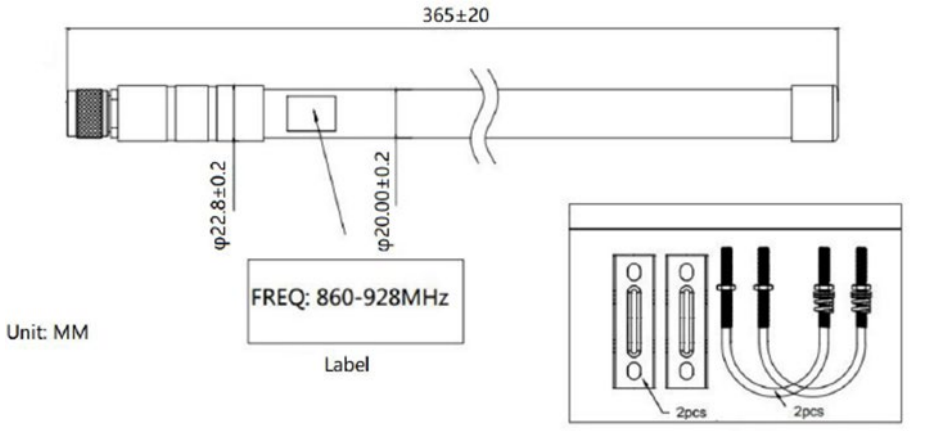

1 set/bag

Accessories are packaged separately and shipped with the goods.

VSWR

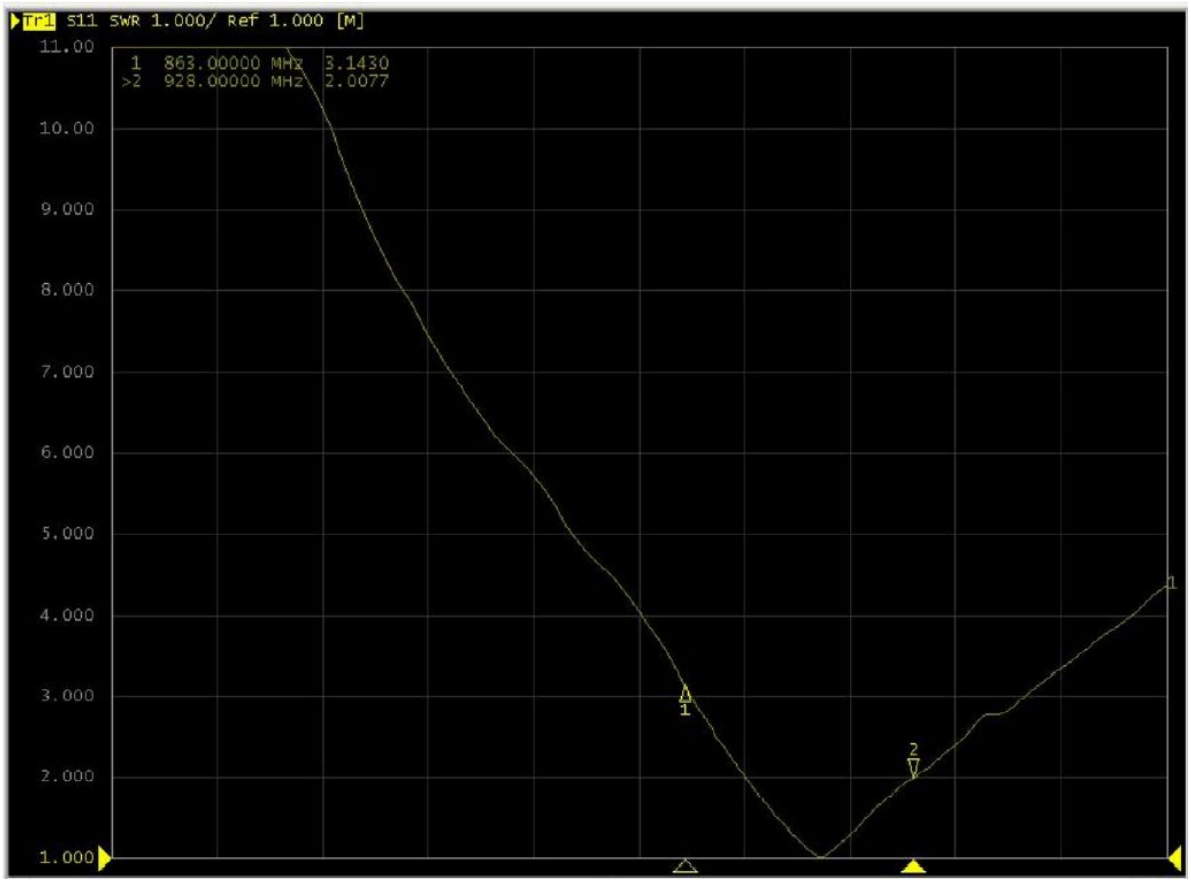
Tr1 S11 SWR 1.000/ Ref 1.000 [M]
1 863.00000 MHz 3.1430
>2 928.00000 MHz 2.0077
11.00
10.00
9.000
8.000
7.000
6.000
5.000
4.000
3.000
2.000
1.000
1
2

Radiation patterns

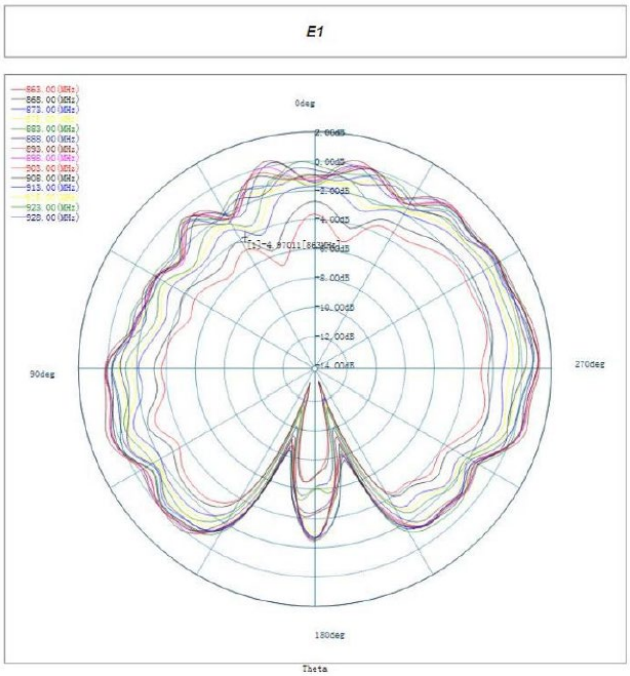

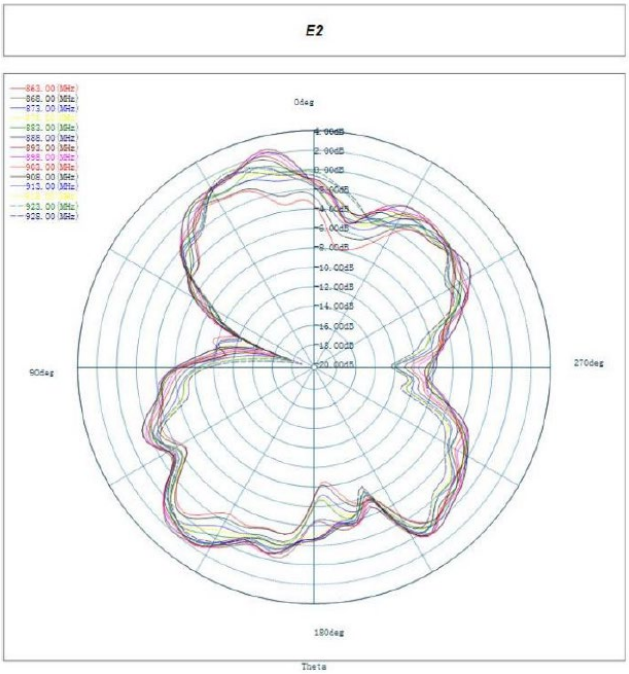

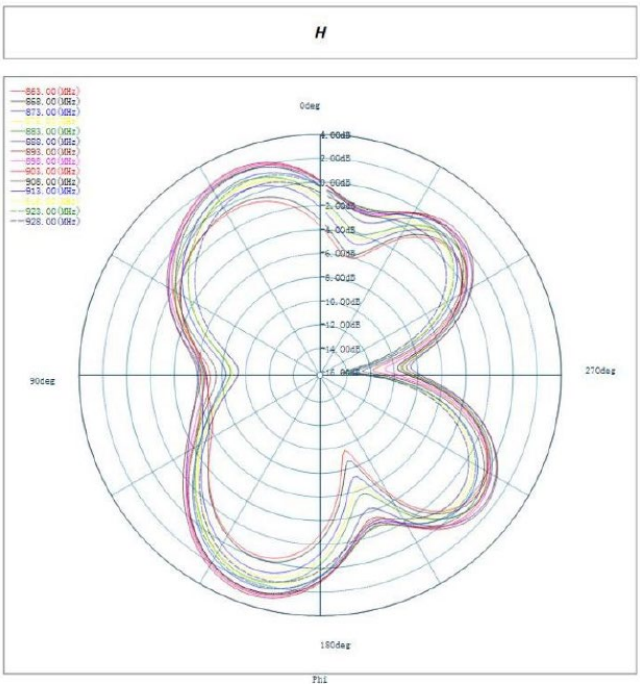

Package

1. 1 pcs antenna per package
2. 20 bags per carton

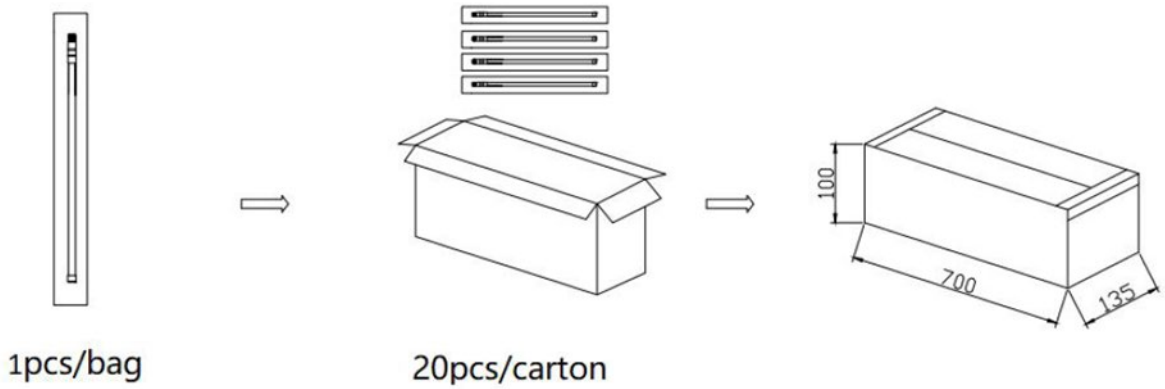

Installation Instructions

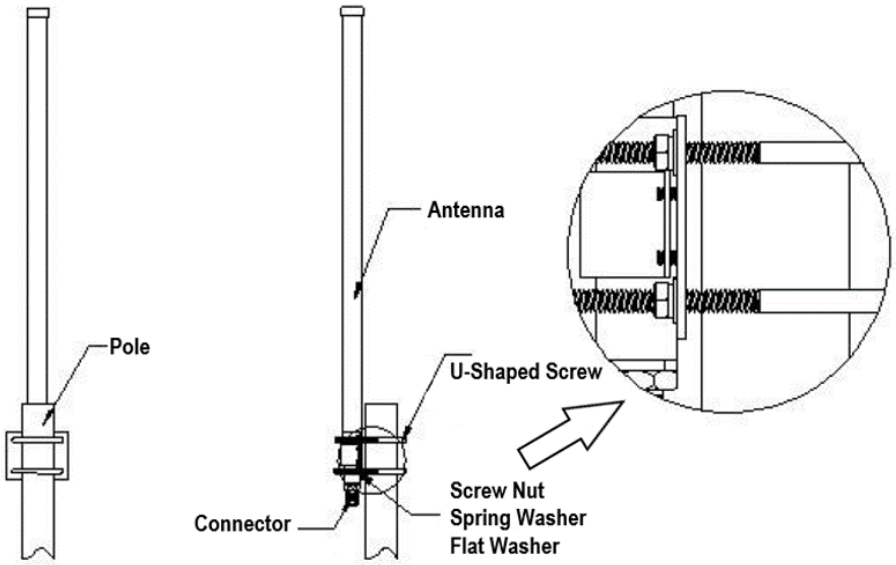

Installation Steps:

1. Place the M6 U-shape screw through the holes on the clamps to mount the antenna to the pole, whose outer diameter is 35～50mm.Then put on the flat washer and the spring washer and twist all the nuts.

2. There should be at least three meters between the ground or floor and the antenna above. Do not place near any huge buildings, metal objects or any other obstacles or shelters

3. Adjust the mounting height of the antenna to the proper position to receive the best signal and then seal all the connectors

4. Please pay attention to lightning protection

Wall Mount Assembly

