NLQ Series
Surface Mount Wire Wound Chip Inductors

9001:2015 CERTIFIED

ROHS/REACH COMPLIANT HALOGEN FREE

NIC Components Corp.

FEATURES

- SMALL SIZE AND SURFACE MOUNTABLE
- HIGH CURRENT AND LOW DC RESISTANCE CHARACTERISITICS
- BOTH FLOW AND REFLOW SOLDERING APPLICABLE
- HIGH INDUCTANCE AVAILABLE IN SMALL SIZE
- EMBOSSED PLASTIC TAPE PACKAGE FOR AUTOMATIC PICK-PLACE

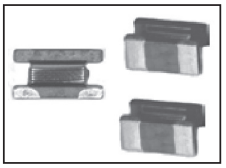

Specifications	NLQ32	NLQ35T	NLQ35	NLQ35S	NLQ45	NLQ45S	NLQ57
	1206	1210	1210	1210	1812	1812	2220
Inductance Range	0.12µH ~ 47µH	1.0µH ~ 100µH	1.0µH ~ 560µH	1.0µH ~ 560µH	1.0µH ~ 470µH	1.0µH ~ 2,200µH	1.2µH ~ 1,000µH
Temperature Range (Including Self-Heating)	-40°C ~ +125°C	-30°C ~ +105°C					
Temperature Rise at Irms	40°C max.	20°C max.					
Inductance Change at Irms	-30% typical	-10% typical					
Inductance Tolerance	10% (K) 20% (M)	10% (K) 20% (M)	5% (J), 10% (K) 20% (M)	5% (J), 10% (K) 20% (M)	5% (J), 10% (K) 20% (M)	5% (J), 10% (K) 20% (M)	10% (K) 20% (M)
Resistance to Solder Heat	260°C for 5 seconds						

Series	Case Size	A	B	C	E	F
NLQ32	1206	3.20 ± 0.3	1.60 ± 0.3	1.80 ± 0.3	1.05 ref.	1.05 ref.
NLQ35T	1210	3.20 ± 0.3	2.50 ± 0.3	1.55 ± 0.3	0.70 min.	0.70 min
NLQ35 & NLQ35S	1210	3.20 ± 0.3	2.50 ± 0.3	2.00 ± 0.3	0.70 min.	0.70 min
NLQ45 & NLQ45S	1812	4.50 ± 0.3	3.20 ± 0.3	2.60 ± 0.3	1.00 min.	1.00 min.
NLQ57	2220	5.70 ± 0.3	5.00 ± 0.3	4.70 ± 0.3	1.30 min.	1.70 min.

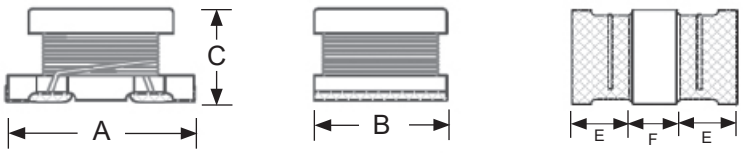

PART NUMBER SYSTEM

NLQ 35 T M 1R0 TR F

- F — RoHS compliant
- TR — Packaging: TR = Tape & Reel
- 1R0 — Inductance Value Code
- M — Inductance Tolerance Code: M = ±20%, K = ±10%, J = ±5%
- T — Characteristic Code
- 35 — Size Code
- NLQ — Series

NLQ Series
Surface Mount Wire Wound Chip Inductors

ISO 9001:2015 CERTIFIED

ROHS/REACH COMPLIANT HALOGEN FREE

NIC Components Corp.

Part Number	STANDARD VALUES - CASE SIZE 32 (3.2 x 1.6 x 1.8mm)					
	Inductance Value (µH)	Tolerances	DC Resistance (Ω)	Irms (mA)	SRF (MHz) min.	Test Frequency
NLQ32MR12TRF	0.12	M	0.062	1500	1100	1MHz
NLQ32MR22TRF	0.22	M	0.084	1300	730	
NLQ32MR47TRF	0.47	M	0.13	700	180	
NLQ32M1R0TRF	1.0	M	0.19	600	70	
NLQ32M2R2TRF	2.2	M	0.30	430	50	
NLQ32M4R7TRF	4.7	M	0.52	350	45	
NLQ32K100TRF	10	K	0.90	230	35	
NLQ32K150TRF	15	K	1.55	200	30	
NLQ32K220TRF	22	K	2.20	160	14	
NLQ32K470TRF	47	K	6.60	120	10	

Part Number	STANDARD VALUES - CASE SIZE 35T (3.2 x 2.5 x 1.55mm)					
	Inductance Value (µH)	Tolerances	DC Resistance (Ω)	Irms (mA)	SRF (MHz) min.	Test Frequency
NLQ35TM1R0TRF	1.0 ± 20%	M	0.078	1000	100	1MHz
NLQ35TM2R2TRF	2.2 ± 20%	M	0.126	790	64	
NLQ35TM4R7TRF	4.7 ± 20%	M	0.195	650	43	
NLQ35TK100TRF	10 ± 10%	K	0.42	450	26	
NLQ35TK150TRF	15 ± 10%	K	0.75	300	22	
NLQ35TK220TRF	22 ± 10%	K	1.20	250	19	
NLQ35TK330TRF	33 ± 10%	K	1.40	200	17	
NLQ35TK470TRF	47 ± 10%	K	2.75	170	13	
NLQ35TK680TRF	68 ± 10%	K	3.60	130	9	
NLQ35TK101TRF	100 ± 10%	K	4.50	100	8	

Part Number	STANDARD VALUES - CASE SIZE 35 (3.2 x 2.5 x 2.0mm)					
	Inductance Value (µH)	Tolerances	DC Resistance (Ω)	Irms (mA)	SRF (MHz) min.	Test Frequency
NLQ35M1R0TRF	1.0	M	0.078	1000	100	1MHz
NLQ35M2R2TRF	2.2	M	0.126	790	64	
NLQ35M4R7TRF	4.7	M	0.195	450	43	
NLQ35K100TRF	10	K	0.572	300	26	
NLQ35_220TRF	22	M, K	0.923	250	19	
NLQ35_470TRF	47	M, K	1.69	170	12	
NLQ35_101TRF	100	K, J	4.55	100	8.0	
NLQ35_221TRF	220	K, J	10.92	70	5.5	
NLQ35_331TRF	330	K, J	13.0	60	4.5	
NLQ35_391TRF	390	K, J	22.1	60	4.0	
NLQ35_471TRF	470	K, J	24.7	60	3.7	
NLQ35_561TRF	560	K, J	28.6	60	3.4	

NLQ Series
Surface Mount Wire Wound Chip Inductors

ISO 9001:2015 CERTIFIED

ROHS/REACH COMPLIANT HALOGEN FREE

NIC Components Corp.

Part Number	STANDARD VALUES - CASE SIZE 45 (4.5 x 3.2 x 2.6mm)					
	Inductance Value (µH)	Tolerances	DC Resistance (Ω)	Irms (mA)	SRF (MHz) min.	Test Frequency
NLQ45M1R0TRF	1.0	M	0.08	1080	100	1MHz
NLQ45M1R5TRF	1.5	M	0.09	1000	85	
NLQ45M2R2TRF	2.2	M	0.11	900	60	
NLQ45M3R3TRF	3.3	M	0.13	800	47	
NLQ45_4R7TRF	4.7	K, M	0.15	750	35	
NLQ45_6R8TRF	6.8	K, M	0.2	720	30	
NLQ45_100TRF	10	J, K	0.24	650	23	
NLQ45_150TRF	15	J, K	0.32	570	20	
NLQ45_220TRF	22	J, K	0.6	420	15	
NLQ45_330TRF	33	J, K	1.0	310	12	
NLQ45_470TRF	47	J, K	1.1	280	10	
NLQ45_680TRF	68	J, K	1.7	220	8.4	
NLQ45_101TRF	100	J, K	2.2	190	6.8	
NLQ45_151TRF	150	J, K	3.5	130	5.5	
NLQ45_221TRF	220	J, K	4.0	110	4.5	
NLQ45_331TRF	330	J, K	6.8	100	3.6	
NLQ45_471TRF	470	J, K	8.5	90	3.0	

Part Number	STANDARD VALUES - CASE SIZE 57 (5.7 x 5.0 x 4.7mm)					
	Inductance Value (µH)	Tolerances	DC Resistance (Ω)	Irms (mA)	SRF (MHz) min.	Test Frequency
NLQ57MR12TRF	0.12	M	0.0098	6000	450	1MHz
NLQ57MR27TRF	0.27	M	0.014	5300	300	
NLQ57MR47TRF	0.47	M	0.0182	4800	200	
NLQ57M1R0TRF	1.0	M	0.027	4000	150	
NLQ57M1R5TRF	1.5	M	0.031	3700	110	
NLQ57M2R2TRF	2.2	M	0.041	3200	80	
NLQ57M3R3TRF	3.3	M	0.05	2900	40	
NLQ57M4R7TRF	4.7	M	0.0574	2700	30	
NLQ57M6R8TRF	6.8	M	0.104	2000	25	
NLQ57_100TRF	10	K, M	0.13	1700	20	
NLQ57_150TRF	15	K, M	0.21	1400	17	
NLQ57_220TRF	22	K, M	0.266	1200	15	
NLQ57_330TRF	33	K, M	0.448	900	12	
NLQ57_470TRF	47	K, M	0.56	800	10 (REF.)	
NLQ57_680TRF	68	K, M	0.938	640	7.6	
NLQ57_101TRF	100	K, M	1.204	560	6.5 (REF.)	100KHz
NLQ57_151TRF	150	K, M	2.66	420	5.0 (REF.)	
NLQ57_221TRF	220	K, M	3.36	320	4.0	
NLQ57_331TRF	330	K, M	6.16	270	3.1	
NLQ57_471TRF	470	K, M	7.56	240	2.4	
NLQ57_681TRF	680	K, M	11.34	190	1.9	
NLQ57_102TRF	1000	K, M	14.42	150	1.7	10KHz
NLQ57_222TRF	2200	K, M	30.1	100	1.2	
NLQ57_472TRF	4700	K, M	61.04	70	0.8	
NLQ57_103TRF	10000	K, M	140	50	0.5	

NLQ Series
Surface Mount Wire Wound Chip Inductors

ISO 9001:2015 CERTIFIED

ROHS/REACH COMPLIANT HALOGEN FREE

NIC Components Corp.

Part Number	STANDARD VALUES - CASE SIZE 35S (3.2 x 2.5 x 2.0mm)							
	Inductance Value (µH)	Tolerances	DC Resistance (Ω)	Irms (mA)	SRF (MHz) min.	Test Frequency	Q Min.	Q Min. Test Freq.
NLQ35S_1R0TRF	1.0	M	0.5	445	100	1MHz	20	1MHz
NLQ35S_1R2TRF	1.2	M	0.6	425	100		20	1MHz
NLQ35S_1R5TRF	1.5	M,K	0.6	400	75		20	1MHz
NLQ35S_1R8TRF	1.8	M,K	0.7	390	60		20	1MHz
NLQ35S_2R2TRF	2.2	M,K	0.8	370	50		20	1MHz
NLQ35S_2R7TRF	2.7	M,K	0.9	320	43		20	1MHz
NLQ35S_3R3TRF	3.3	M,K	1.0	300	38		20	1MHz
NLQ35S_3R9TRF	3.9	M,K	1.1	290	35		20	1MHz
NLQ35S_4R7TRF	4.7	M,K	1.2	270	31		20	1MHz
NLQ35S_5R6TRF	5.6	M,K	1.3	250	28		20	1MHz
NLQ35S_6R8TRF	6.8	M,K	1.5	240	25		20	1MHz
NLQ35S_8R2TRF	8.2	M,K	1.6	225	23		20	1MHz
NLQ35S_100TRF	10	K,J	1.8	190	20		35	1MHz
NLQ35S_120TRF	12	K,J	2.0	180	18		35	1MHz
NLQ35S_150TRF	15	K,J	2.2	170	16		35	1MHz
NLQ35S_180TRF	18	K,J	2.5	165	15		35	1MHz
NLQ35S_220TRF	22	K,J	2.8	150	14		35	1MHz
NLQ35S_270TRF	27	K,J	3.1	125	13		35	1MHz
NLQ35S_330TRF	33	K,J	3.5	115	12		40	1MHz
NLQ35S_390TRF	39	K,J	3.9	110	11		40	1MHz
NLQ35S_470TRF	47	K,J	4.3	100	11		40	1MHz
NLQ35S_560TRF	56	K,J	4.9	85	10		40	1MHz
NLQ35S_680TRF	68	K,J	5.5	80	9		40	1MHz
NLQ35S_820TRF	82	K,J	6.2	70	8.5		40	1MHz
NLQ35S_101TRF	100	K,J	7.0	80	8.0		40	796kHz
NLQ35S_121TRF	120	K,J	8.0	75	7.5		40	796kHz
NLQ35S_151TRF	150	K,J	9.3	70	7.0		40	796kHz
NLQ35S_181TRF	180	K,J	10.2	65	6.0		40	796kHz
NLQ35S_221TRF	220	K,J	11.8	65	5.5		40	796kHz
NLQ35S_271TRF	270	K,J	12.5	65	5.0		40	796kHz
NLQ35S_331TRF	330	K,J	13	65	5.0		40	796kHz
NLQ35S_391TRF	390	K,J	22	50	5.0		50	796kHz
NLQ35S_471TRF	470	K,J	25	45	5.0		50	796kHz
NLQ35S_561TRF	560	K,J	28	40	5.0 (REF.)		50	796kHz

NLQ Series
Surface Mount Wire Wound Chip Inductors

ISO 9001:2015 CERTIFIED

ROHS/REACH COMPLIANT HALOGEN FREE

NIC Components Corp.

Part Number	STANDARD VALUES - CASE SIZE 45 (4.5 x 3.2 x 2.6mm)							
	Inductance Value (µH)	Tolerances	DC Resistance (Ω)	Irms (mA)	SRF (MHz) min.	Test Frequency	Q min.	Q Min. Test Freq
NLQ45S_1R0TRF	1.0	M	0.2	500	120	1MHz	20	1MHz
NLQ45S_1R2TRF	1.2	M	0.2	500	100		20	1MHz
NLQ45S_1R5TRF	1.5	M	0.3	500	85		20	1MHz
NLQ45S_1R8TRF	1.8	M	0.3	500	75		20	1MHz
NLQ45S_2R2TRF	2.2	M	0.3	500	62		20	1MHz
NLQ45S_2R7TRF	2.7	M	0.32	500	53		20	1MHz
NLQ45S_3R3TRF	3.3	M	0.35	500	47		20	1MHz
NLQ45S_3R9TRF	3.9	M	0.38	500	41		20	1MHz
NLQ45S_4R7TRF	4.7	M,K	0.40	500	38		30	1MHz
NLQ45S_5R6TRF	5.6	M,K	0.47	500	33		30	1MHz
NLQ45S_6R8TRF	6.8	M,K	0.5	450	31		30	1MHz
NLQ45S_8R2TRF	8.2	M,K	0.56	450	27		30	1MHz
NLQ45S_100TRF	10	K,J	0.56	400	23		35	1MHz
NLQ45S_120TRF	12	K,J	0.62	380	21		35	1MHz
NLQ45S_150TRF	15	K,J	0.73	360	19		35	1MHz
NLQ45S_180TRF	18	K,J	0.82	340	17		35	1MHz
NLQ45S_220TRF	22	K,J	0.94	320	15		35	1MHz
NLQ45S_270TRF	27	K,J	1.1	300	14		35	1MHz
NLQ45S_330TRF	33	K,J	1.2	270	12		35	1MHz
NLQ45S_390TRF	39	K,J	1.4	240	11	1KHz	35	1MHz
NLQ45S_470TRF	47	K,J	1.5	220	10		35	1MHz
NLQ45S_560TRF	56	K,J	1.7	200	9.3		35	1MHz
NLQ45S_680TRF	68	K,J	1.9	180	8.4		35	1MHz
NLQ45S_820TRF	82	K,J	2.2	170	7.5		35	1MHz
NLQ45S_101TRF	100	K,J	2.5	160	6.8		40	796kHz
NLQ45S_121TRF	120	K,J	3.0	150	6.2		40	796kHz
NLQ45S_151TRF	150	K,J	3.7	130	5.5		40	796kHz
NLQ45S_181TRF	180	K,J	4.5	120	5.0		40	796kHz
NLQ45S_221TRF	220	K,J	5.4	110	4.5		40	796kHz
NLQ45S_271TRF	270	K,J	6.8	100	4.0		40	796kHz
NLQ45S_331TRF	330	K,J	8.2	95	3.6		40	796kHz
NLQ45S_391TRF	390	K,J	9.7	90	3.3		40	796kHz
NLQ45S_471TRF	470	K,J	11.8	80	3.0		40	796kHz
NLQ45S_561TRF	560	K,J	14.5	70	2.7		40	796kHz
NLQ45S_681TRF	680	K,J	17.0	65	2.5		40	796kHz
NLQ45S_821TRF	820	K,J	20.5	60	2.2		40	796kHz
NLQ45S_102TRF	1000	K,J	25	55	2.0		40	252kHz
NLQ45S_122TRF	1200	K,J	30	50	1.8		40	252kHz
NLQ45S_152TRF	1500	K,J	37	45	1.6		40	252kHz
NLQ45S_182TRF	1800	K,J	45	35	1.5		40	252kHz
NLQ45S_222TRF	2200	K,J	50	30	1.3		40	252kHz

Case Size	LAND PATTERN DIMENSIONS (mm)		
	L	G	H
NLQ32	3.4	1.0	3.4
NLQ35/35T/35S	4.0	1.0	2.0
NLQ45/45S	5.2	1.2	3.0
NLQ57	6.0	2.0	5.0

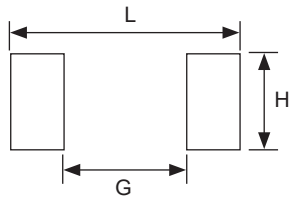

REFLOW SOLDERING PROFILE

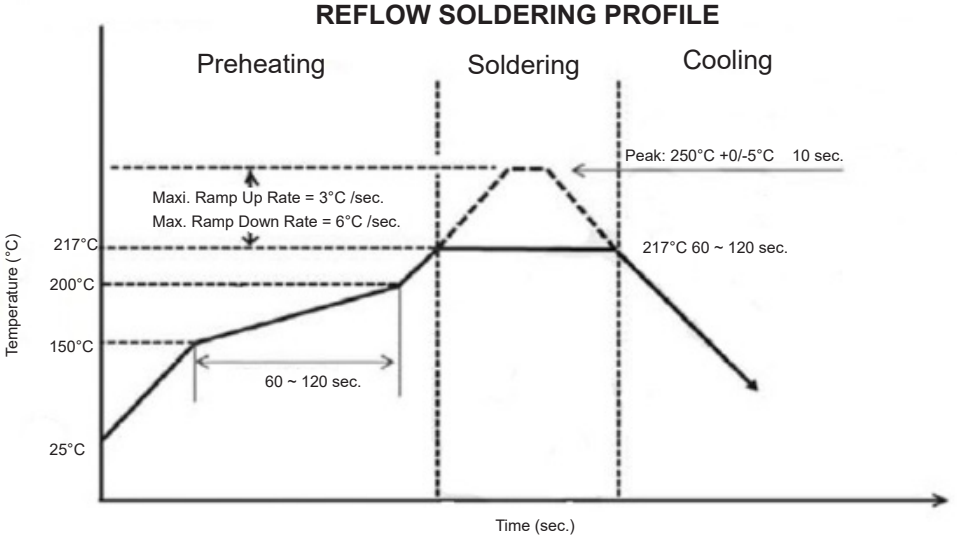

NLQ Series
Surface Mount Wire Wound Chip Inductors

Case Size	Reel Qty	CARRIER TAPE DIMENSIONS (mm)						
		W	A0	B0	Co	K0	Po	t
NLQ32	2,000	8.0	2.40 ± 0.1	3.50 ± 0.1	3.50 ± 0.05	2.55 ± 0.1	4.0 ± 0.1	0.26 ± 0.05
NLQ35	2,000		2.67 ± 0.1	3.65 ± 0.1		2.50 ± 0.1		
NLQ45	500	12.0	3.50 ± 0.1	4.98 ± 0.1	5.5 ± 0.05	3.05 ± 0.1	8.0 ± 0.1	
NLQ57	1,000	18.0					12.0 ± 0.1	

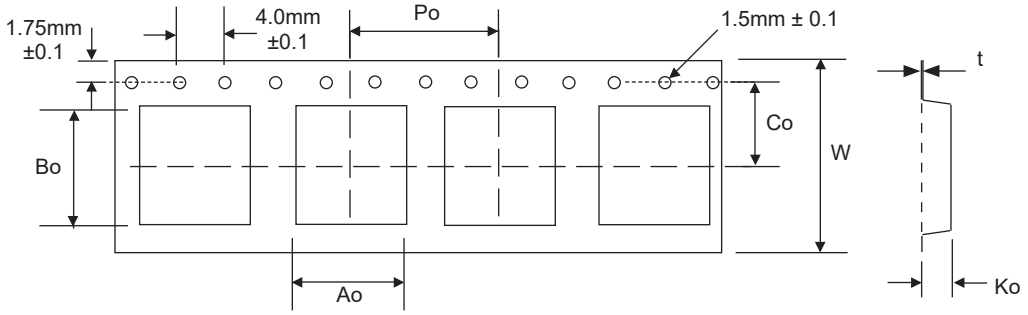

Tape Width	REEL DIMENSIONS (mm)			
	A(mm)	B(mm)	C(mm)	D(mm)
8mm	8.5 ±0.1	100 ±1	13.0 ±0.5	330
12mm	12.5 ±0.1			

