NANE46X14PJW2CF

2400 & 4900 MHz WIFI External Antenna

9001:2015 CERTIFIED

ROHS/REACH COMPLIANT HALOGEN FREE

NIC Components Corp.

Description

The NANE46X14PJW2CF is an external active antenna designed for dual-band WIFI applications. It operates within the frequency ranges of 2400~2483.5 MHz and 4900~5825 MHz, making it perfect for use in Routers, Gateways, and Meters.



Features

- 2.4 & 4.9 GHz WIFI Protocols
- Customizable Cable and Connector Options
- IP66 Waterproof Rating
- RoHs Complaint

Part Number Breakdown

NANE 46x14 P J W 2 C 302 A0 F

- F — RoHS Compliant
- A0 — Cable & Connector Format Codes
- 302 — Cable Length (mm)
- C — Cabled Antenna
- 2 — Number of Frequency Bands
- W — Protocol Code
- J — Internal Production Code
- P — Shape Option
- 46x14 — Dimensions
- NANE — Series

Part Number Options

Part Number	Protocol	Connector	Cable Type	Cable Length
NANE46X14PJW2C302A0F	WIFI (W)	SMA MALE	RG174	3000 mm
NANE46X14PJW2C500A1F	WIFI (W)	IPEX IV	RF1.37	500 mm
NANE46X14PJWM2C102A0F	WIFI MIMO (WM)	SMA MALE	RG174	1000 mm

The table represents assembled part numbers available on www.niccomp.com. For options not listed above please contact NIC

NANE46X14PJW2CF

2400 & 4900 MHz WIFI External Antenna

Specifications

Electrical		
Frequency Range	2400~2483.5 MHz	4900~5925 MHz
Polarization	Linear	
Gain	3 dBi typ.	
V.S.W.R	< 2.0	
Impedance	50Ω	
Radome Material	ABS	
Mounting Method	Magnet / Adhesive	
Environmental		
Operating Temperature -	-40°C~+85°C	
Relative Humidity	Up to 95%	
Ingress Protection	IP66	
Vibration	10 to 55Hz with 1.5mm amplitude 2hrs	
ROHS Compliant	Yes	

Dimensions

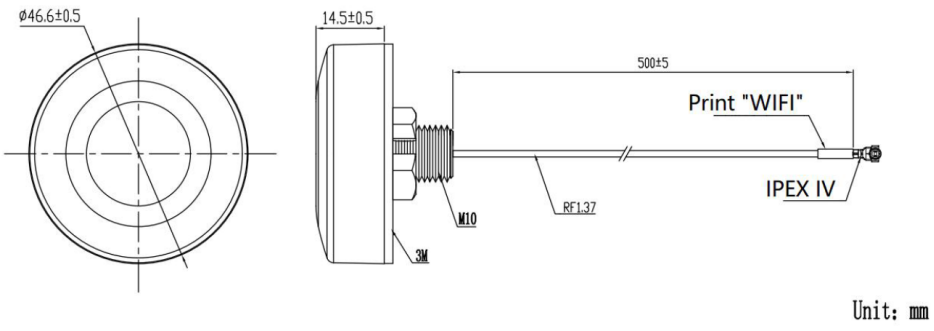

NANE46X14PJW2C500A1F Dimensions

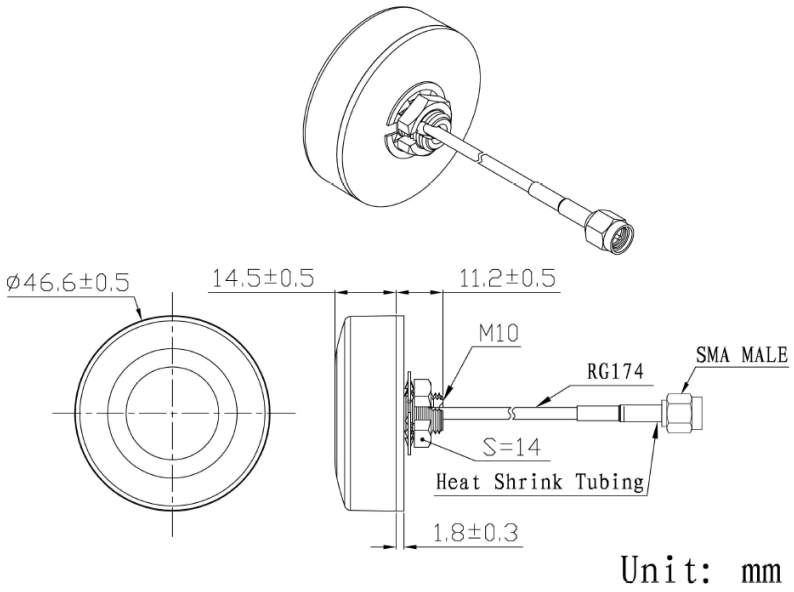

NANE46X14PJW2C302A0F Dimensions

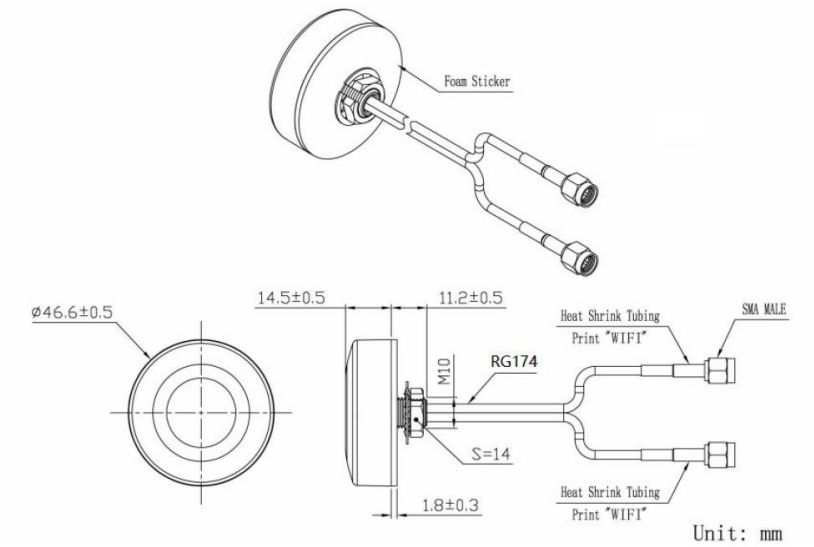

NANE46X14PJWM2C102A0F Dimensions

Radiation Patterns



NANE46X14PJW2C302A0F & NANE46X14PJW2C500A1F

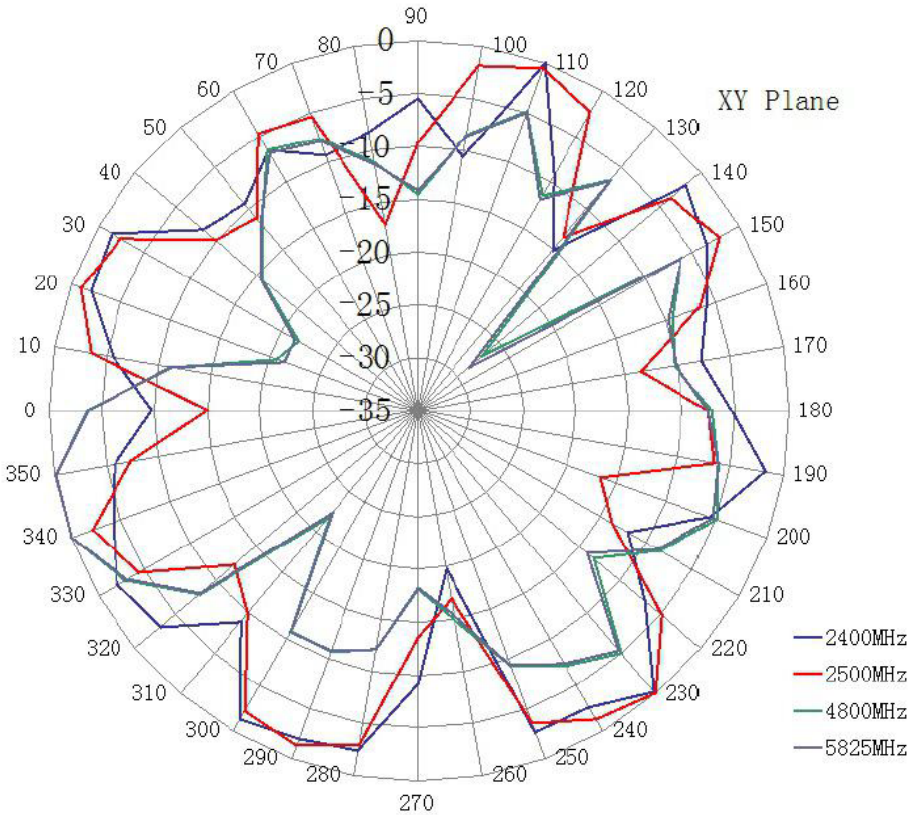

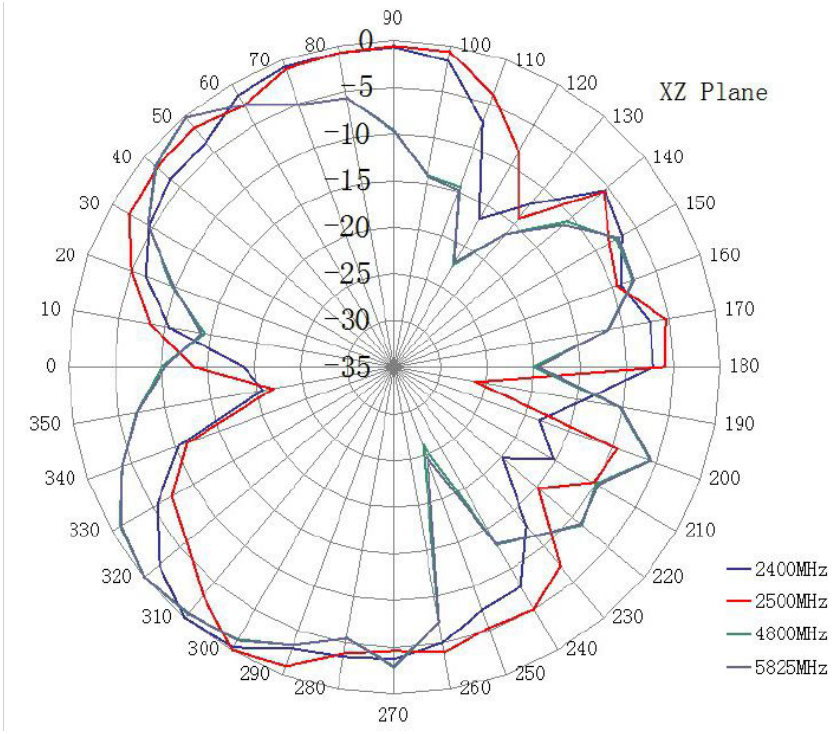
XZ Plane
90
80
70
60
50
40
30
20
10
0
350
340
330
320
310
300
290
280
270
260
250
240
230
220
210
200
190
180
170
160
150
140
130
120
110
100
0
-5
-10
-15
-20
-25
-30
-35
2400MHz
2500MHz
4800MHz
5825MHz

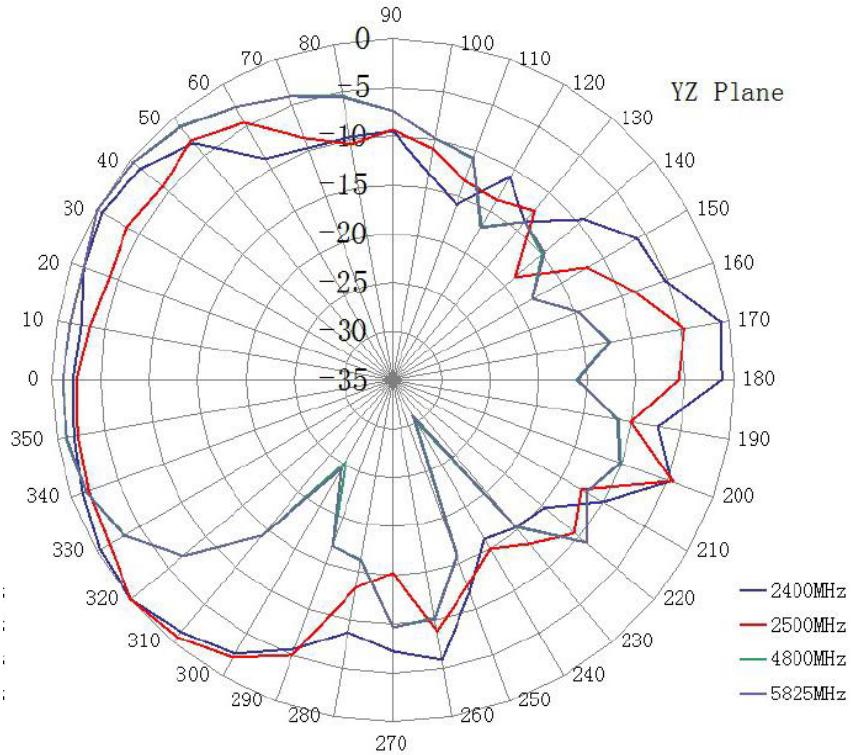
YZ Plane
90
80
70
60
50
40
30
20
10
0
350
340
330
320
310
300
290
280
270
260
250
240
230
220
210
200
190
180
170
160
150
140
130
120
110
100
0
-5
-10
-15
-20
-25
-30
-35
2400MHz
2500MHz
4800MHz
5825MHz

NANE46X14PJWM2C102A0F

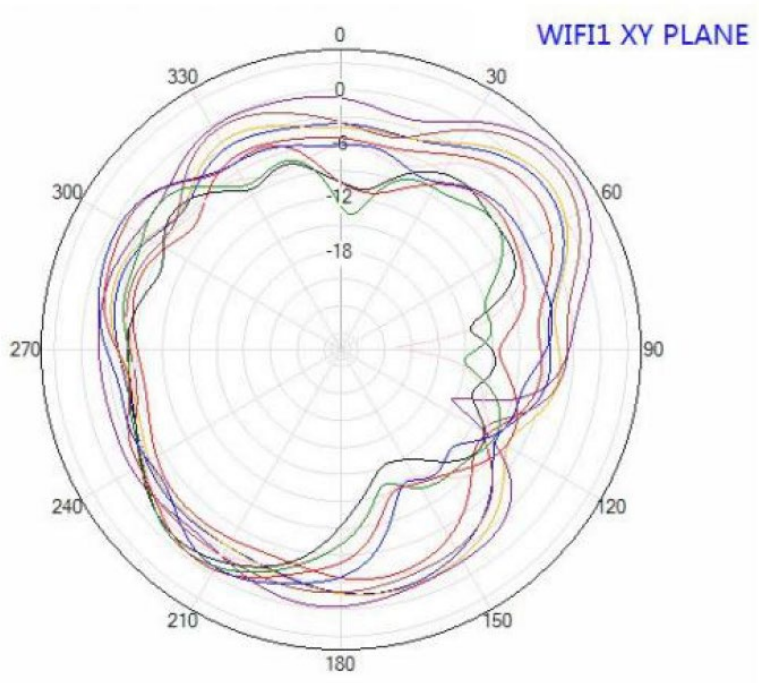

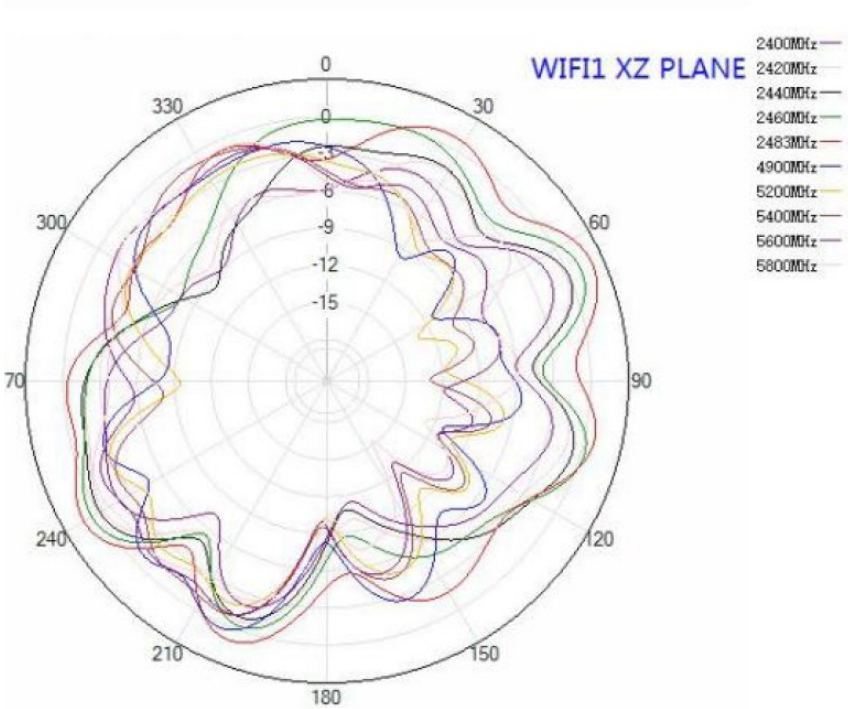

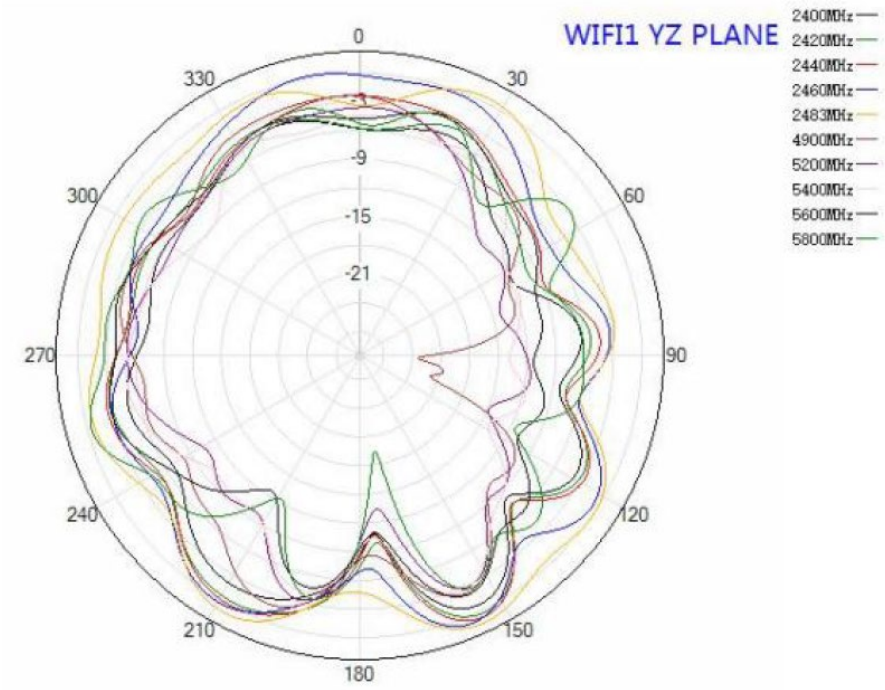
WIFI1 YZ PLANE
2400MHz
2420MHz
2440MHz
2460MHz
2483MHz
4900MHz
5200MHz
5400MHz
5600MHz
5800MHz
0
30
60
90
120
150
180
210
240
270
300
330
-9
-15
-21

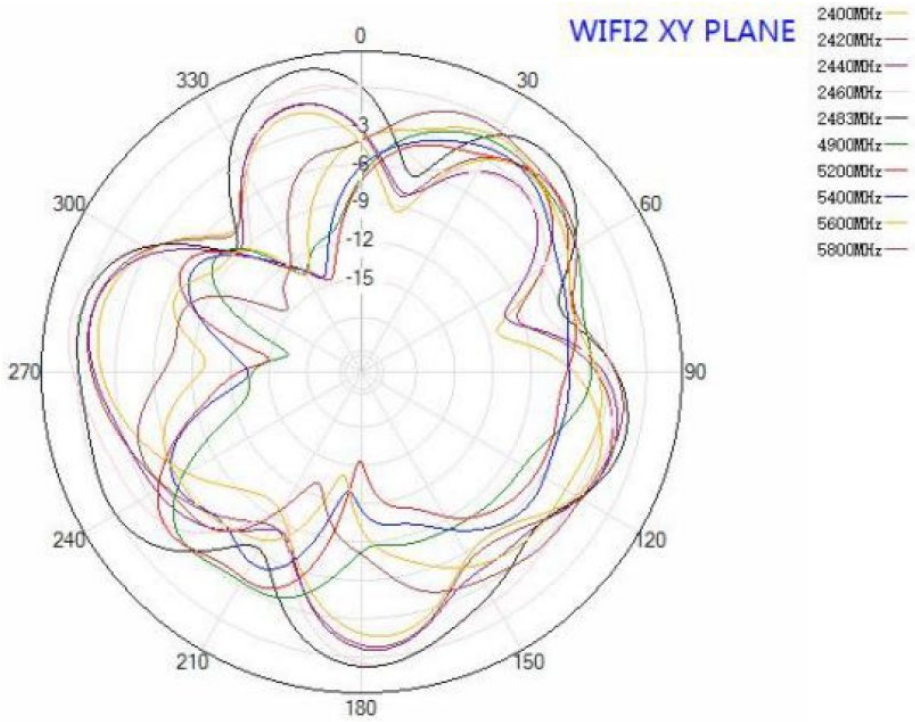
WIFI2 XY PLANE
2400MHz
2420MHz
2440MHz
2460MHz
2483MHz
4900MHz
5200MHz
5400MHz
5600MHz
5800MHz
0
30
60
90
120
150
180
210
240
270
300
330
-3
-6
-9
-12
-15

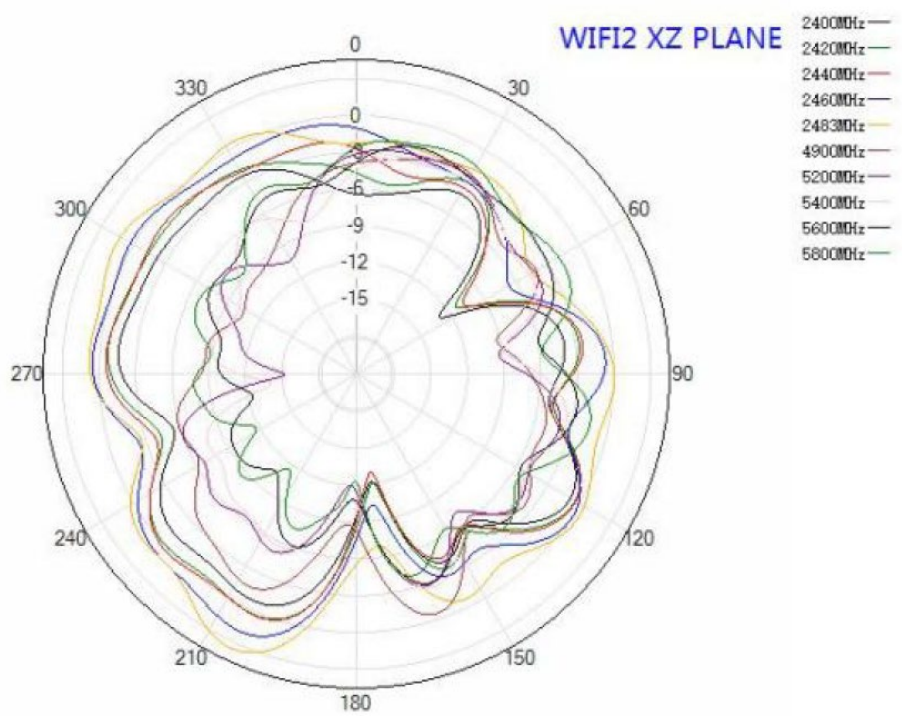
WIFI2 XZ PLANE
2400MHz
2420MHz
2440MHz
2460MHz
2483MHz
4900MHz
5200MHz
5400MHz
5600MHz
5800MHz
0
30
60
90
120
150
180
210
240
270
300
330
0
-3
-6
-9
-12
-15

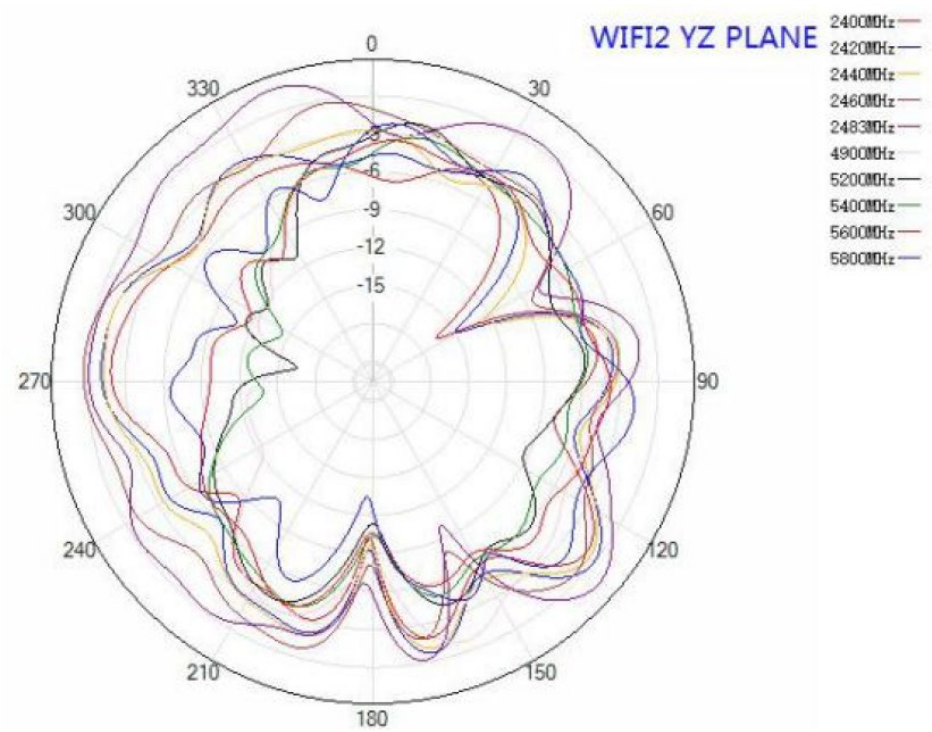
WIFI2 YZ PLANE
2400MHz
2420MHz
2440MHz
2460MHz
2483MHz
4900MHz
5200MHz
5400MHz
5600MHz
5800MHz
0
30
60
90
120
150
180
210
240
270
300
330
0
-3
-6
-9
-12
-15