NANE1500X20FSJS0R915G1NF

915 MHz ISM / LoRa External Antenna

9001:2015 CERTIFIED

ROHS/REACH COMPLIANT HALOGEN FREE

NIC Components Corp.

Description

The NANE1500X20FSJS0R915G1NF is an External Antenna designed for ISM / LoRa applications. It operates within the frequency ranges of 915 MHz making it perfect for Cellular communication, Hotspots and LoRaWAN.



Features

- ISM / LoRa 915 MHz Band
- Waterproof
- Fiberglass Antenna
- RoHS Complaint

Part Number Breakdown

NANE 1500X20 F S J S 0R915G 1 N F

- F — RoHS Compliant
- N — Connector Code
- 1 — Number of Frequency Bands
- 0R915G — Center Frequency
- S — Protocol Code
- J — Internal Production Code
- S — Straight
- F — Fiberglass Antenna
- 1500X20 — Dimensions
- NANE — Series

Specifications

Electrical	
Frequency Range	915 MHz
Bandwidth	915MHz ± 10MHz
Polarization	Vertical
Gain	12 dB
V.S.W.R	≤1.4
Radiation Direction	Omnidirectional
Half Power Corner	H: 360 V: 16.5
Max Input Power	100 W
Impedance	50Ω
Environmental & Mechanical	
Operating Temperature	-40°C~+60°C
Lightning Protection	DC Ground
Wind Resistance	60 m/s
Connector	N
Weight	0.42 kg
Radome	Fiberglass
Color	White
Mouthing Method	U bracket
Mounting Hardware	Φ 35~Φ 50 mm
RoHS Compliant	Yes

Dimensions

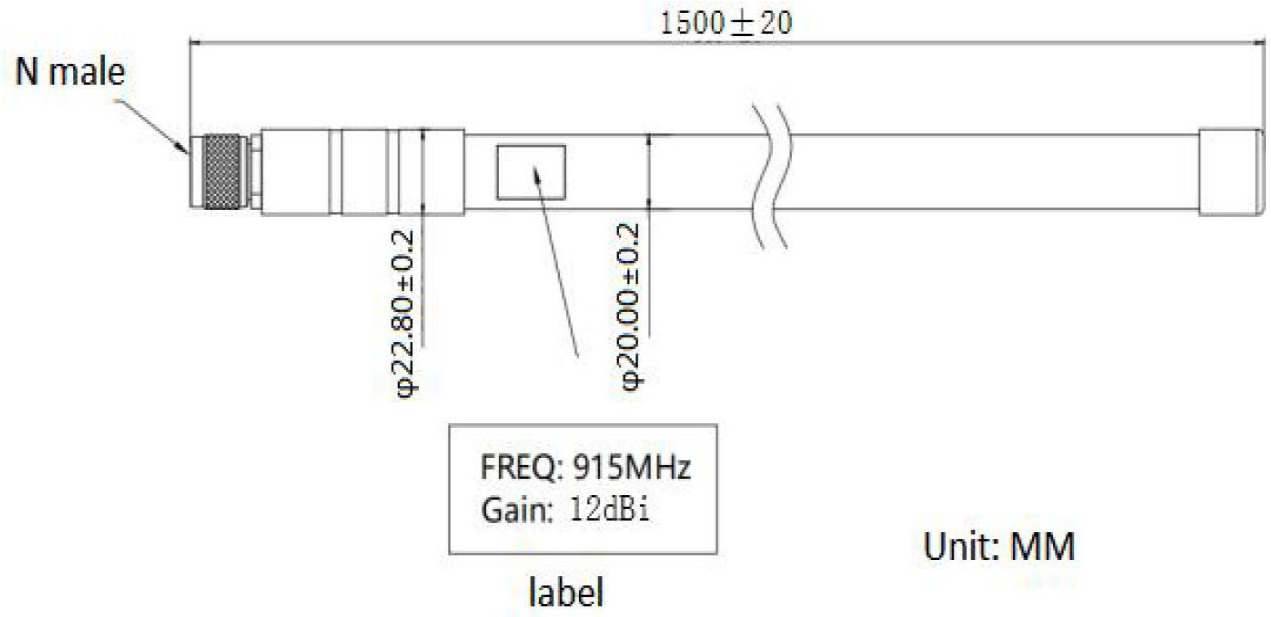
1500±20
N male
φ22.80±0.2
φ20.00±0.2
FREQ: 915MHz
Gain: 12dBi
label
Unit: MM

VSWR

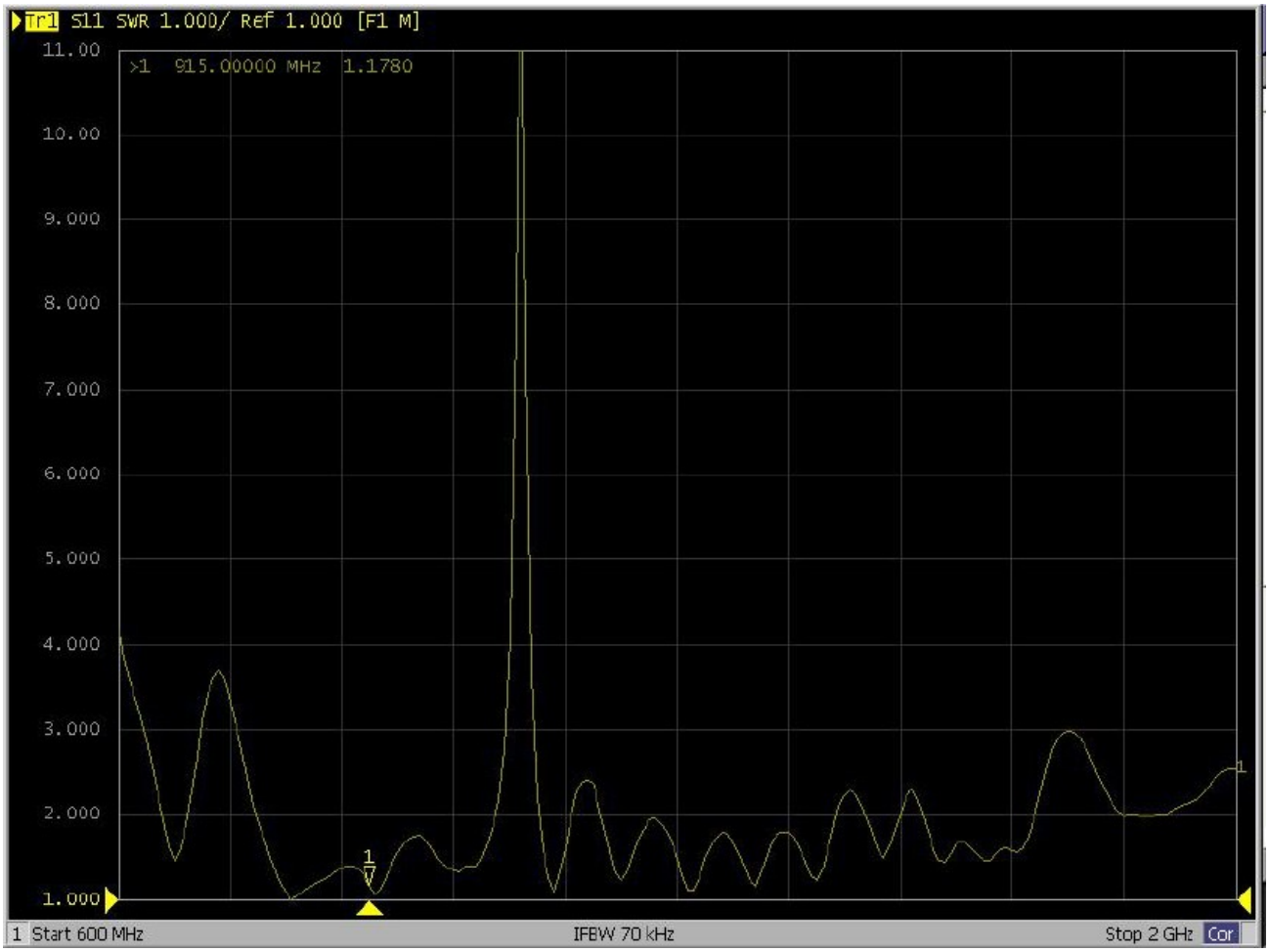
Tr1 S11 SWR 1.000/ Ref 1.000 [F1 M]
>1 915.00000 MHz 1.1780
11.00
10.00
9.000
8.000
7.000
6.000
5.000
4.000
3.000
2.000
1.000
1 Start 600 MHz
IFBW 70 kHz
Stop 2 GHz
Cor

E1

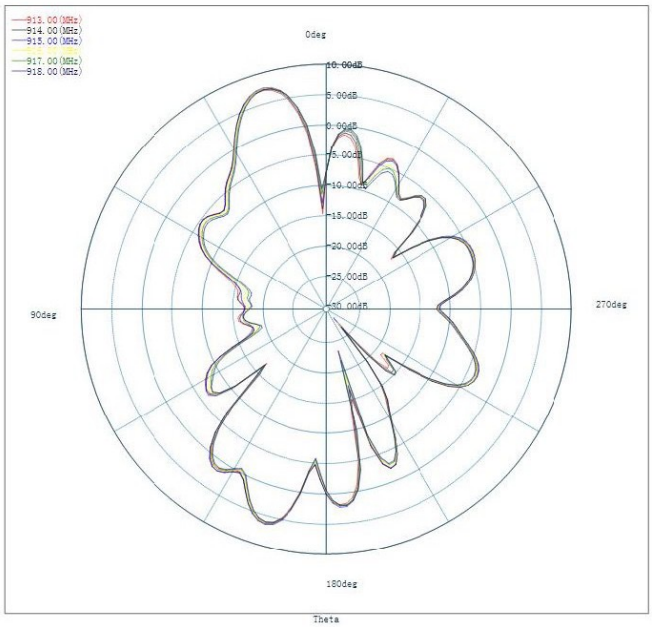
913.00(MHz)
914.00(MHz)
915.00(MHz)
917.00(MHz)
918.00(MHz)
0deg
90deg
270deg
180deg
Theta

E2

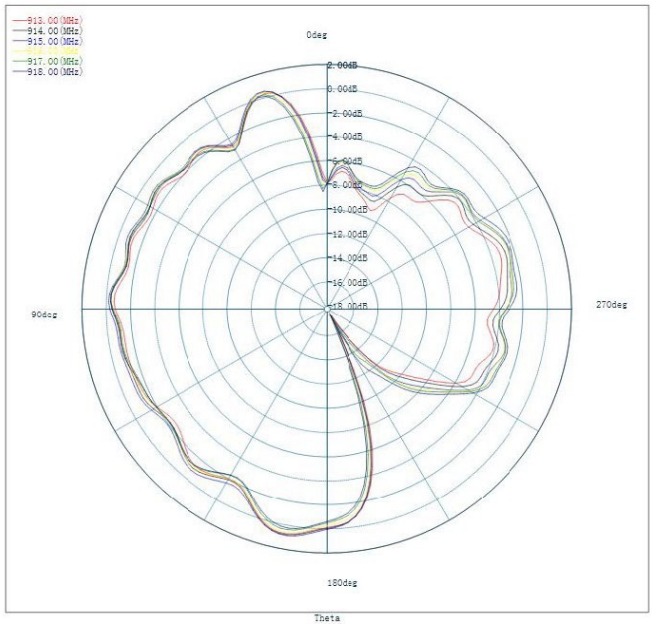
913.00(MHz)
914.00(MHz)
915.00(MHz)
917.00(MHz)
918.00(MHz)
0deg
90deg
270deg
180deg
Theta

H

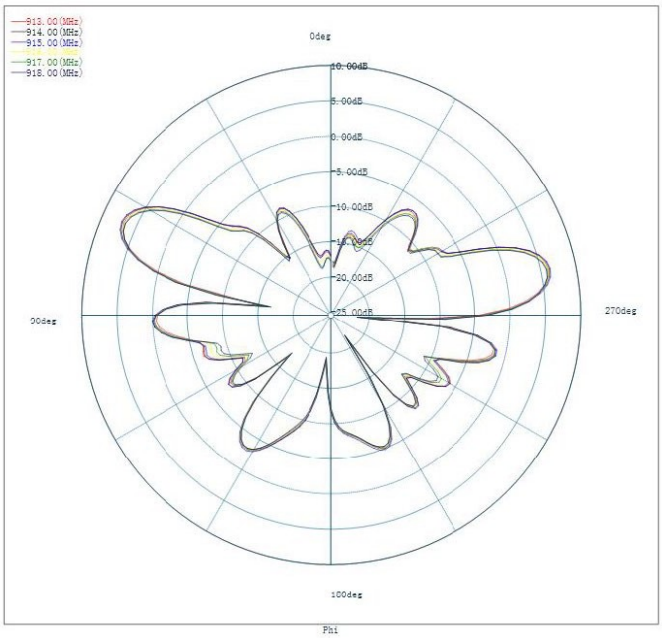
913.00(MHz)
914.00(MHz)
915.00(MHz)
917.00(MHz)
918.00(MHz)
0deg
90deg
270deg
180deg
Phi

Package

1. 1 pcs antenna per package
2. 2. 20 bags per carton

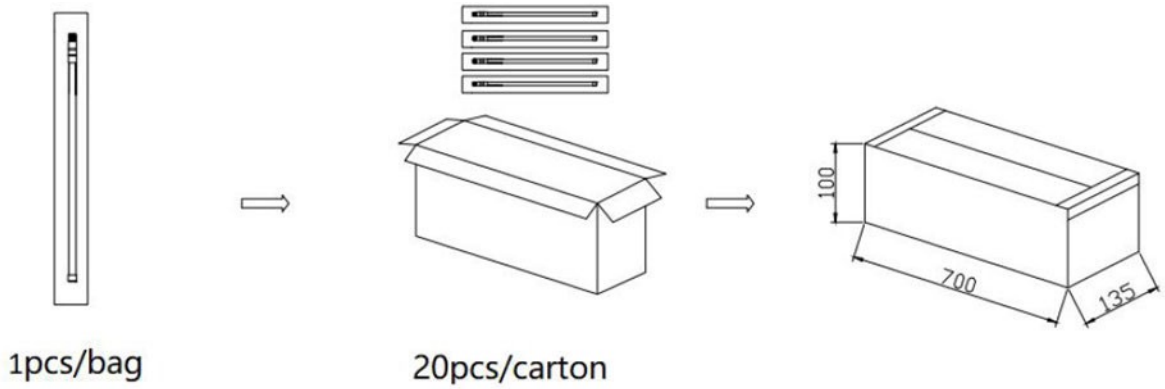

Installation Instructions

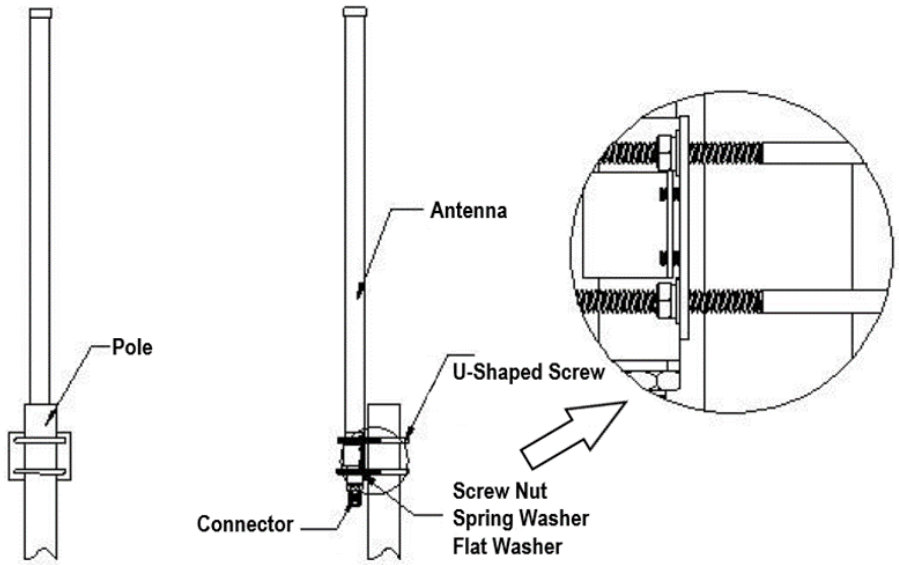

Installation Steps:

1. Place the M6 U-shape screw through the holes on the clamps to mount the antenna to the pole, whose outer diameter is 35～50mm.Then put on the flat washer and the spring washer and twist all the nuts.

2. There should be at least three meters between the ground or floor and the antenna above. Do not place near any huge buildings, metal objects or any other obstacles or shelters

3. Adjust the mounting height of the antenna to the proper position to receive the best signal and then seal all the connectors

4. Please pay attention to lightning protection