NMC-Q Series
Surface Mount Multilayer Capacitors

ISO 9001:2015 CERTIFIED

ROHS/REACH COMPLIANT HALOGEN FREE

NIC Components Corp.

FEATURES



- HIGH Q FOR RF APPLICATIONS
- STABLE NPO CHARACTERISTICS OVER TEMPERATURE AND VOLTAGE
- LOW LOSS COPPER (Cu) ELECTRODES
- HIGH VOLTAGE (UP TO 500VDC)
- EIA 0201, 0402, 0505, 0603, 0805 AND 1111 CASE SIZES
- IDEAL FOR WIRELESS DATA AND VOICE COMMUNICATIONS APPLICATIONS WLANs, HIPERLAN, 802.11A, 802.11B, Wi-Fi, BLUETOOTH,TELEMATICS, PCS, LMDS AND CELLULAR

SPECIFICATIONS	NPO	
Capacitance Range	0.1pF ~ 1000pF	
Capacitance Tolerance	±0.05pF(A), ±0.1pF(B), ±0.25pF(C), ±0.5pF(D) ±1%(F), ±2%(G), ±5% (J)	
Operating Temperature Range	-55°C ~ +125°C	
Temperature Characteristics	0 ± 30PPM/°C	
Rated Voltage	6.3Vdc, 10Vdc, 25Vdc, 50Vdc, 100Vdc, 250Vdc & 500Vdc	
Q Factor (1MHz, 1.0Vrms, +25°C)	0201 0402 (25V ~ 50V)	C < 30pF Q ≥ 400+20xC C ≥ 30pF Q ≥ 1000
	0402 (100V ~ 200V) 0603, 0505, 0805 & 1111	C < 30pF Q ≥ 800+20xC C ≥ 30pF Q ≥ 1400
insulation Resistance	10,000 Megohms min. @ +25°C	
Dielectric Withstanding Voltage	0201 ~ 0805: ≤100V x 2.5RV, ≥200V x 2RV for 1 ~ 5 sec. 1111: ≤100V x 2.5RV, <500V x 2RV, 500V x 1.5 for 1 ~ 5 sec.	

Note: Reflow soldering allowed for all case sizes. Contact NIC for wave soldering restrictions.

RoHS Compliant

Includes all homogeneous materials

*See Part Number System for Details

DIMENSIONS (mm)

EIA Case Size	0201	0402	0505	0603	0805	1111
Length (L)	0.6 ± 0.03	1.0 ±0.05	1.40 +0.38/-0.25	1.6 ±0.10	2.0 ± 0.20	2.79 +0.51/-0.25
Width (W)	0.3 ± 0.03	0.5 ± 0.05	1.40 ±0.38	0.8 ± 0.10	1.25 ± 0.20	2.79 ±0.38
Thickness (T)	0.33 max.	0.55 max.	1.30 max.	0.87 max.	0.70 max. (0.2pF) 0.95 max.	1.78 max.
Termination Width (P)	0.10 ~ 0.20	0.15 ~ 0.30	0.12 ~ 0.50	0.25 ~ 0.55	0.30 ~ 0.70	0.13 ~ 0.63

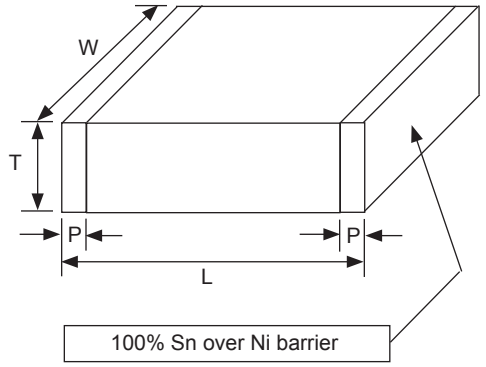

PART NUMBER SYSTEM

NMC-Q 0603 NPO 100 J 50 TRP F

- F — RoHS Compliant
- TRP = Punched carrier, TRPLP = Embossed Plastic
- 50 — Voltage (Vdc)
- J — Capacitance Tolerance Code (see chart)
- 100 — Capacitance Code, expressed in pF, first 2 digits are significant, 3rd digit is no. of zeros, "R" indicates decimal for under 10pF
- NPO — Temperature Characteristic
- 0603 — Size Code (see chart)
- NMC-Q — Series

0201 6.3 Volt Standard Values and Characteristics

NIC PART NUMBER	CAPACITANCE VALUE (pF)	AVAILABLE TOLERANCE	Q FACTOR (typ. @ 1GHz)*	ESR Ω (typ. @ 1GHz)*
NMC-Q0201NPO0R1_6.3TRPF	0.1	B	400	2.2
NMC-Q0201NPO0R2_6.3TRPF	0.2	A, B	400	1.8
NMC-Q0201NPO0R3_6.3TRPF	0.3	A, B	400	0.95
NMC-Q0201NPO0R4_6.3TRPF	0.4	A, B	400	0.75
NMC-Q0201NPO0R5_6.3TRPF	0.5	A, B, C	400	0.50
NMC-Q0201NPO0R6_6.3TRPF	0.6	A, B, C	400	0.45
NMC-Q0201NPO0R7_6.3TRPF	0.7	A, B, C	400	0.40
NMC-Q0201NPO0R8_6.3TRPF	0.8	A, B, C	400	0.40
NMC-Q0201NPO0R9_6.3TRPF	0.9	A, B, C	400	0.35
NMC-Q0201NPO1R0_6.3TRPF	1.0	A, B, C	400	0.35
NMC-Q0201NPO1R1_6.3TRPF	1.1	A, B, C	400	0.35
NMC-Q0201NPO1R2_6.3TRPF	1.2	A, B, C	400	0.35
NMC-Q0201NPO1R3_6.3TRPF	1.3	A, B, C	400	0.35
NMC-Q0201NPO1R4_6.3TRPF	1.4	A, B, C	400	0.35
NMC-Q0201NPO1R5_6.3TRPF	1.5	A, B, C	400	0.30
NMC-Q0201NPO1R6_6.3TRPF	1.6	A, B, C	400	0.30
NMC-Q0201NPO1R7_6.3TRPF	1.7	A, B, C	400	0.30
NMC-Q0201NPO1R8_6.3TRPF	1.8	A, B, C	400	0.30
NMC-Q0201NPO1R9_6.3TRPF	1.9	A, B, C	400	0.30
NMC-Q0201NPO2R0_6.3TRPF	2.0	A, B, C	400	0.30
NMC-Q0201NPO2R1_6.3TRPF	2.1	A, B, C	400	0.30
NMC-Q0201NPO2R2_6.3TRPF	2.2	A, B, C	400	0.25
NMC-Q0201NPO2R3_6.3TRPF	2.3	A, B, C	400	0.25
NMC-Q0201NPO2R4_6.3TRPF	2.4	A, B, C	400	0.25
NMC-Q0201NPO2R5_6.3TRPF	2.5	A, B, C	400	0.25
NMC-Q0201NPO2R6_6.3TRPF	2.6	A, B, C	400	0.25
NMC-Q0201NPO2R7_6.3TRPF	2.7	A, B, C	400	0.25
NMC-Q0201NPO2R8_6.3TRPF	2.8	A, B, C	400	0.25
NMC-Q0201NPO2R9_6.3TRPF	2.9	A, B, C	400	0.25
NMC-Q0201NPO3R0_6.3TRPF	3.0	A, B, C	400	0.25
NMC-Q0201NPO3R1_6.3TRPF	3.1	A, B, C	400	0.25
NMC-Q0201NPO3R2_6.3TRPF	3.2	A, B, C	400	0.25
NMC-Q0201NPO3R3_6.3TRPF	3.3	A, B, C	400	0.25
NMC-Q0201NPO3R4_6.3TRPF	3.4	A, B, C	400	0.25
NMC-Q0201NPO3R5_6.3TRPF	3.5	A, B, C	400	0.25
NMC-Q0201NPO3R6_6.3TRPF	3.6	A, B, C	400	0.25
NMC-Q0201NPO3R7_6.3TRPF	3.7	A, B, C	400	0.25
NMC-Q0201NPO3R8_6.3TRPF	3.8	A, B, C	400	0.25
NMC-Q0201NPO3R9_6.3TRPF	3.9	A, B, C	400	0.20
NMC-Q0201NPO4R0_6.3TRPF	4.0	A, B, C	400	0.20
NMC-Q0201NPO4R1_6.3TRPF	4.1	A, B, C	400	0.20
NMC-Q0201NPO4R2_6.3TRPF	4.2	A, B, C	400	0.20
NMC-Q0201NPO4R3_6.3TRPF	4.3	A, B, C	400	0.20
NMC-Q0201NPO4R4_6.3TRPF	4.4	A, B, C	400	0.20
NMC-Q0201NPO4R5_6.3TRPF	4.5	A, B, C	400	0.20
NMC-Q0201NPO4R6_6.3TRPF	4.6	A, B, C	400	0.20
NMC-Q0201NPO4R7_6.3TRPF	4.7	A, B, C	400	0.20
NMC-Q0201NPO4R7_6.3TRPF	4.7	A, B, C	400	0.20
NMC-Q0201NPO4R8_6.3TRPF	4.8	A, B, C	400	0.20
NMC-Q0201NPO4R9_6.3TRPF	4.9	A, B, C	400	0.20
NMC-Q0201NPO5R1_6.3TRPF	5.1	A, B, C	400	0.20

*Typical Q & ESR

0201 6.3 Volt Standard Values and Characteristics

NIC PART NUMBER	CAPACITANCE VALUE (pF)	AVAILABLE TOLERANCE	Q FACTOR (typ. @ 1GHz)*	ESR Ω (typ. @ 1GHz)*
NMC-Q0201NPO5R2_6.3TRPF	5.2	A, B, C	400	0.20
NMC-Q0201NPO5R3_6.3TRPF	5.3	A, B, C	400	0.20
NMC-Q0201NPO5R4_6.3TRPF	5.4	A, B, C	400	0.20
NMC-Q0201NPO5R6_6.3TRPF	5.6	B, C, D	350	0.15
NMC-Q0201NPO5R7_6.3TRPF	5.7	B, C, D	350	0.15
NMC-Q0201NPO5R9_6.3TRPF	5.9	B, C, D	350	0.15
NMC-Q0201NPO6R0_6.3TRPF	6.0	B, C, D	350	0.15
NMC-Q0201NPO6R1_6.3TRPF	6.1	B, C, D	350	0.15
NMC-Q0201NPO6R2_6.3TRPF	6.2	B, C, D	350	0.15
NMC-Q0201NPO6R3_6.3TRPF	6.3	B, C, D	350	0.15
NMC-Q0201NPO6R4_6.3TRPF	6.4	B, C, D	350	0.15
NMC-Q0201NPO6R6_6.3TRPF	6.6	B, C, D	350	0.15
NMC-Q0201NPO6R8_6.3TRPF	6.8	B, C, D	350	0.15
NMC-Q0201NPO6R9_6.3TRPF	6.9	B, C, D	350	0.15
NMC-Q0201NPO7R0_6.3TRPF	7.0	B, C, D	350	0.15
NMC-Q0201NPO7R1_6.3TRPF	7.1	B, C, D	350	0.15
NMC-Q0201NPO7R2_6.3TRPF	7.2	B, C, D	350	0.15
NMC-Q0201NPO7R3_6.3TRPF	7.3	B, C, D	350	0.15
NMC-Q0201NPO7R4_6.3TRPF	7.4	B, C, D	350	0.15
NMC-Q0201NPO7R5_6.3TRPF	7.5	B, C, D	350	0.15
NMC-Q0201NPO7R6_6.3TRPF	7.6	B, C, D	350	0.15
NMC-Q0201NPO7R7_6.3TRPF	7.7	B, C, D	350	0.15
NMC-Q0201NPO7R8_6.3TRPF	7.8	B, C, D	350	0.15
NMC-Q0201NPO8R0_6.3TRPF	8.0	B, C, D	350	0.15
NMC-Q0201NPO8R1_6.3TRPF	8.1	B, C, D	300	0.15
NMC-Q0201NPO8R2_6.3TRPF	8.2	B, C, D	300	0.15
NMC-Q0201NPO8R3_6.3TRPF	8.3	B, C, D	300	0.15
NMC-Q0201NPO8R4_6.3TRPF	8.4	B, C, D	300	0.15
NMC-Q0201NPO8R5_6.3TRPF	8.5	B, C, D	300	0.15
NMC-Q0201NPO8R6_6.3TRPF	8.6	B, C, D	300	0.15
NMC-Q0201NPO8R7_6.3TRPF	8.7	B, C, D	300	0.15
NMC-Q0201NPO8R8_6.3TRPF	8.8	B, C, D	300	0.15
NMC-Q0201NPO8R9_6.3TRPF	8.9	B, C, D	300	0.15
NMC-Q0201NPO9R0_6.3TRPF	9.0	B, C, D	300	0.15
NMC-Q0201NPO9R1_6.3TRPF	9.1	B, C, D	300	0.15
NMC-Q0201NPO9R2_6.3TRPF	9.2	B, C, D	300	0.15
NMC-Q0201NPO9R3_6.3TRPF	9.3	B, C, D	300	0.15
NMC-Q0201NPO9R4_6.3TRPF	9.4	B, C, D	300	0.15
NMC-Q0201NPO9R5_6.3TRPF	9.5	B, C, D	300	0.15
NMC-Q0201NPO9R6_6.3TRPF	9.6	B, C, D	300	0.15
NMC-Q0201NPO9R7_6.3TRPF	9.7	B, C, D	300	0.15
NMC-Q0201NPO9R8_6.3TRPF	9.8	B, C, D	300	0.15
NMC-Q0201NPO9R9_6.3TRPF	9.9	B, C, D	300	0.15
NMC-Q0201NPO100_6.3TRPF	10	F, G, J	300	0.10
NMC-Q0201NPO110_6.3TRPF	11	F, G, J	300	0.10
NMC-Q0201NPO120_6.3TRPF	12	F, G, J	300	0.10
NMC-Q0201NPO130_6.3TRPF	13	F, G, J	300	0.10
NMC-Q0201NPO150_6.3TRPF	15	F, G, J	250	0.10
NMC-Q0201NPO160_6.3TRPF	16	F, G, J	300	0.10
NMC-Q0201NPO180_6.3TRPF	18	F, G, J	250	0.10
NMC-Q0201NPO200_6.3TRPF	20	F, G, J	250	0.10
NMC-Q0201NPO220_6.3TRPF	22	F, G, J	250	0.10

*Typical Q & ESR

0201 6.3 Volt Standard Values and Characteristics

NIC PART NUMBER	CAPACITANCE VALUE (pF)	AVAILABLE TOLERANCE	Q FACTOR (typ. @ 1GHz)*	ESR Ω (typ. @ 1GHz)*
NMC-Q0201NPO240_6.3TRPF	24	F, G, J	250	0.10
NMC-Q0201NPO270_6.3TRPF	27	F, G, J	250	0.10
NMC-Q0201NPO300_6.3TRPF	30	F, G, J	250	0.10
NMC-Q0201NPO330_6.3TRPF	33	F, G, J	250	0.10

*Typical Q & ESR

0201 10 Volt Standard Values and Characteristics

NIC PART NUMBER	CAPACITANCE VALUE (pF)	AVAILABLE TOLERANCE	Q FACTOR (typ. @ 1GHz)*	ESR Ω (typ. @ 1GHz)*
NMC-Q0201NPO0R1_10TRPF	0.1	B	400	2.2
NMC-Q0201NPO0R2_10TRPF	0.2	A, B	400	1.8
NMC-Q0201NPO0R3_10TRPF	0.3	A, B	400	0.95
NMC-Q0201NPO0R4_10TRPF	0.4	A, B	400	0.75
NMC-Q0201NPO0R5_10TRPF	0.5	A, B, C	400	0.50
NMC-Q0201NPO0R6_10TRPF	0.6	A, B, C	400	0.45
NMC-Q0201NPO0R7_10TRPF	0.7	A, B, C	400	0.40
NMC-Q0201NPO0R8_10TRPF	0.8	A, B, C	400	0.40
NMC-Q0201NPO0R9_10TRPF	0.9	A, B, C	400	0.35
NMC-Q0201NPO1R0_10TRPF	1.0	A, B, C	400	0.35
NMC-Q0201NPO1R1_10TRPF	1.1	A, B, C	400	0.35
NMC-Q0201NPO1R2_10TRPF	1.2	A, B, C	400	0.35
NMC-Q0201NPO1R3_10TRPF	1.3	A, B, C	400	0.35
NMC-Q0201NPO1R4_10TRPF	1.4	A, B, C	400	0.35
NMC-Q0201NPO1R5_10TRPF	1.5	A, B, C	400	0.30
NMC-Q0201NPO1R6_10TRPF	1.6	A, B, C	400	0.30
NMC-Q0201NPO1R7_10TRPF	1.7	A, B, C	400	0.30
NMC-Q0201NPO1R8_10TRPF	1.8	A, B, C	400	0.30
NMC-Q0201NPO1R9_10TRPF	1.9	A, B, C	400	0.30
NMC-Q0201NPO2R0_10TRPF	2.0	A, B, C	400	0.30
NMC-Q0201NPO2R1_10TRPF	2.1	A, B, C	400	0.30
NMC-Q0201NPO2R2_10TRPF	2.2	A, B, C	400	0.25
NMC-Q0201NPO2R3_10TRPF	2.3	A, B, C	400	0.25
NMC-Q0201NPO2R4_10TRPF	2.4	A, B, C	400	0.25
NMC-Q0201NPO2R5_10TRPF	2.5	A, B, C	400	0.25
NMC-Q0201NPO2R6_10TRPF	2.6	A, B, C	400	0.25
NMC-Q0201NPO2R7_10TRPF	2.7	A, B, C	400	0.25
NMC-Q0201NPO2R8_10TRPF	2.8	A, B, C	400	0.25
NMC-Q0201NPO2R9_10TRPF	2.9	A, B, C	400	0.25
NMC-Q0201NPO3R0_10TRPF	3.0	A, B, C	400	0.25
NMC-Q0201NPO3R1_10TRPF	3.1	A, B, C	400	0.25
NMC-Q0201NPO3R2_10TRPF	3.2	A, B, C	400	0.25
NMC-Q0201NPO3R3_10TRPF	3.3	A, B, C	400	0.25
NMC-Q0201NPO3R4_10TRPF	3.4	A, B, C	400	0.25
NMC-Q0201NPO3R5_10TRPF	3.5	A, B, C	400	0.25
NMC-Q0201NPO3R6_10TRPF	3.6	A, B, C	400	0.25
NMC-Q0201NPO3R7_10TRPF	3.7	A, B, C	400	0.25
NMC-Q0201NPO3R8_10TRPF	3.8	A, B, C	400	0.25
NMC-Q0201NPO3R9_10TRPF	3.9	A, B, C	400	0.20
NMC-Q0201NPO4R0_10TRPF	4.0	A, B, C	400	0.20
NMC-Q0201NPO4R1_10TRPF	4.1	A, B, C	400	0.20
NMC-Q0201NPO4R2_10TRPF	4.2	A, B, C	400	0.20
NMC-Q0201NPO4R3_10TRPF	4.3	A, B, C	400	0.20
NMC-Q0201NPO4R4_10TRPF	4.4	A, B, C	400	0.20
NMC-Q0201NPO4R5_10TRPF	4.5	A, B, C	400	0.20
NMC-Q0201NPO4R6_10TRPF	4.6	A, B, C	400	0.20
NMC-Q0201NPO4R7_10TRPF	4.7	A, B, C	400	0.20
NMC-Q0201NPO4R7_10TRPF	4.7	A, B, C	400	0.20
NMC-Q0201NPO4R8_10TRPF	4.8	A, B, C	400	0.20
NMC-Q0201NPO4R9_10TRPF	4.9	A, B, C	400	0.20
NMC-Q0201NPO5R1_10TRPF	5.1	A, B, C	400	0.20

*Typical Q & ESR

0201 10 Volt Standard Values and Characteristics

NIC PART NUMBER	CAPACITANCE VALUE (pF)	AVAILABLE TOLERANCE	Q FACTOR (typ. @ 1GHz)*	ESR Ω (typ. @ 1GHz)*
NMC-Q0201NPO5R2_10TRPF	5.2	A, B, C	400	0.20
NMC-Q0201NPO5R3_10TRPF	5.3	A, B, C	400	0.20
NMC-Q0201NPO5R4_10TRPF	5.4	A, B, C	400	0.20
NMC-Q0201NPO5R6_10TRPF	5.6	B, C, D	350	0.15
NMC-Q0201NPO5R7_10TRPF	5.7	B, C, D	350	0.15
NMC-Q0201NPO5R9_10TRPF	5.9	B, C, D	350	0.15
NMC-Q0201NPO6R0_10TRPF	6.0	B, C, D	350	0.15
NMC-Q0201NPO6R1_10TRPF	6.1	B, C, D	350	0.15
NMC-Q0201NPO6R2_10TRPF	6.2	B, C, D	350	0.15
NMC-Q0201NPO6R3_10TRPF	6.3	B, C, D	350	0.15
NMC-Q0201NPO6R4_10TRPF	6.4	B, C, D	350	0.15
NMC-Q0201NPO6R6_10TRPF	6.6	B, C, D	350	0.15
NMC-Q0201NPO6R8_10TRPF	6.8	B, C, D	350	0.15
NMC-Q0201NPO6R9_10TRPF	6.9	B, C, D	350	0.15
NMC-Q0201NPO7R0_10TRPF	7.0	B, C, D	350	0.15
NMC-Q0201NPO7R1_10TRPF	7.1	B, C, D	350	0.15
NMC-Q0201NPO7R2_10TRPF	7.2	B, C, D	350	0.15
NMC-Q0201NPO7R3_10TRPF	7.3	B, C, D	350	0.15
NMC-Q0201NPO7R4_10TRPF	7.4	B, C, D	350	0.15
NMC-Q0201NPO7R5_10TRPF	7.5	B, C, D	350	0.15
NMC-Q0201NPO7R6_10TRPF	7.6	B, C, D	350	0.15
NMC-Q0201NPO7R7_10TRPF	7.7	B, C, D	350	0.15
NMC-Q0201NPO7R8_10TRPF	7.8	B, C, D	350	0.15
NMC-Q0201NPO8R0_10TRPF	8.0	B, C, D	350	0.15
NMC-Q0201NPO8R1_10TRPF	8.1	B, C, D	300	0.15
NMC-Q0201NPO8R2_10TRPF	8.2	B, C, D	300	0.15
NMC-Q0201NPO8R3_10TRPF	8.3	B, C, D	300	0.15
NMC-Q0201NPO8R4_10TRPF	8.4	B, C, D	300	0.15
NMC-Q0201NPO8R5_10TRPF	8.5	B, C, D	300	0.15
NMC-Q0201NPO8R6_10TRPF	8.6	B, C, D	300	0.15
NMC-Q0201NPO8R7_10TRPF	8.7	B, C, D	300	0.15
NMC-Q0201NPO8R8_10TRPF	8.8	B, C, D	300	0.15
NMC-Q0201NPO8R9_10TRPF	8.9	B, C, D	300	0.15
NMC-Q0201NPO9R0_10TRPF	9.0	B, C, D	300	0.15
NMC-Q0201NPO9R1_10TRPF	9.1	B, C, D	300	0.15
NMC-Q0201NPO9R2_10TRPF	9.2	B, C, D	300	0.15
NMC-Q0201NPO9R3_10TRPF	9.3	B, C, D	300	0.15
NMC-Q0201NPO9R4_10TRPF	9.4	B, C, D	300	0.15
NMC-Q0201NPO9R5_10TRPF	9.5	B, C, D	300	0.15
NMC-Q0201NPO9R6_10TRPF	9.6	B, C, D	300	0.15
NMC-Q0201NPO9R7_10TRPF	9.7	B, C, D	300	0.15
NMC-Q0201NPO9R8_10TRPF	9.8	B, C, D	300	0.15
NMC-Q0201NPO9R9_10TRPF	9.9	B, C, D	300	0.15
NMC-Q0201NPO100_10TRPF	10	F, G, J	300	0.10
NMC-Q0201NPO110_10TRPF	11	F, G, J	300	0.10
NMC-Q0201NPO120_10TRPF	12	F, G, J	300	0.10
NMC-Q0201NPO130_10TRPF	13	F, G, J	300	0.10
NMC-Q0201NPO150_10TRPF	15	F, G, J	250	0.10
NMC-Q0201NPO160_10TRPF	16	F, G, J	300	0.10
NMC-Q0201NPO180_10TRPF	18	F, G, J	250	0.10
NMC-Q0201NPO200_10TRPF	20	F, G, J	250	0.10
NMC-Q0201NPO220_10TRPF	22	F, G, J	250	0.10

*Typical Q & ESR

0201 10 Volt Standard Values and Characteristics

NIC PART NUMBER	CAPACITANCE VALUE (pF)	AVAILABLE TOLERANCE	Q FACTOR (typ. @ 1GHz)*	ESR Ω (typ. @ 1GHz)*
NMC-Q0201NPO240_10TRPF	24	F, G, J	250	0.10
NMC-Q0201NPO270_10TRPF	27	F, G, J	250	0.10
NMC-Q0201NPO300_10TRPF	30	F, G, J	250	0.10
NMC-Q0201NPO330_10TRPF	33	F, G, J	250	0.10

*Typical Q & ESR

0201 25 Volt Standard Values and Characteristics

NIC PART NUMBER	CAPACITANCE VALUE (pF)	AVAILABLE TOLERANCE	Q FACTOR (typ. @ 1GHz)*	ESR Ω (typ. @ 1GHz)*
NMC-Q0201NPO0R1_25TRPF	0.1	B	400	2.2
NMC-Q0201NPO0R2_25TRPF	0.2	A, B	400	1.8
NMC-Q0201NPO0R3_25TRPF	0.3	A, B	400	0.95
NMC-Q0201NPO0R4_25TRPF	0.4	A, B	400	0.75
NMC-Q0201NPO0R5_25TRPF	0.5	A, B, C	400	0.50
NMC-Q0201NPO0R6_25TRPF	0.6	A, B, C	400	0.45
NMC-Q0201NPO0R7_25TRPF	0.7	A, B, C	400	0.40
NMC-Q0201NPO0R8_25TRPF	0.8	A, B, C	400	0.40
NMC-Q0201NPO0R9_25TRPF	0.9	A, B, C	400	0.35
NMC-Q0201NPO1R0_25TRPF	1.0	A, B, C	400	0.35
NMC-Q0201NPO1R1_25TRPF	1.1	A, B, C	400	0.35
NMC-Q0201NPO1R2_25TRPF	1.2	A, B, C	400	0.35
NMC-Q0201NPO1R3_25TRPF	1.3	A, B, C	400	0.35
NMC-Q0201NPO1R4_25TRPF	1.4	A, B, C	400	0.35
NMC-Q0201NPO1R5_25TRPF	1.5	A, B, C	400	0.30
NMC-Q0201NPO1R6_25TRPF	1.6	A, B, C	400	0.30
NMC-Q0201NPO1R7_25TRPF	1.7	A, B, C	400	0.30
NMC-Q0201NPO1R8_25TRPF	1.8	A, B, C	400	0.30
NMC-Q0201NPO1R9_25TRPF	1.9	A, B, C	400	0.30
NMC-Q0201NPO2R0_25TRPF	2.0	A, B, C	400	0.30
NMC-Q0201NPO2R1_25TRPF	2.1	A, B, C	400	0.30
NMC-Q0201NPO2R2_25TRPF	2.2	A, B, C	400	0.25
NMC-Q0201NPO2R3_25TRPF	2.3	A, B, C	400	0.25
NMC-Q0201NPO2R4_25TRPF	2.4	A, B, C	400	0.25
NMC-Q0201NPO2R5_25TRPF	2.5	A, B, C	400	0.25
NMC-Q0201NPO2R6_25TRPF	2.6	A, B, C	400	0.25
NMC-Q0201NPO2R7_25TRPF	2.7	A, B, C	400	0.25
NMC-Q0201NPO2R8_25TRPF	2.8	A, B, C	400	0.25
NMC-Q0201NPO2R9_25TRPF	2.9	A, B, C	400	0.25
NMC-Q0201NPO3R0_25TRPF	3.0	A, B, C	400	0.25
NMC-Q0201NPO3R1_25TRPF	3.1	A, B, C	400	0.25
NMC-Q0201NPO3R2_25TRPF	3.2	A, B, C	400	0.25
NMC-Q0201NPO3R3_25TRPF	3.3	A, B, C	400	0.25
NMC-Q0201NPO3R4_25TRPF	3.4	A, B, C	400	0.25
NMC-Q0201NPO3R5_25TRPF	3.5	A, B, C	400	0.25
NMC-Q0201NPO3R6_25TRPF	3.6	A, B, C	400	0.25
NMC-Q0201NPO3R7_25TRPF	3.7	A, B, C	400	0.25
NMC-Q0201NPO3R8_25TRPF	3.8	A, B, C	400	0.25
NMC-Q0201NPO3R9_25TRPF	3.9	A, B, C	400	0.20
NMC-Q0201NPO4R0_25TRPF	4.0	A, B, C	400	0.20
NMC-Q0201NPO4R1_25TRPF	4.1	A, B, C	400	0.20
NMC-Q0201NPO4R2_25TRPF	4.2	A, B, C	400	0.20
NMC-Q0201NPO4R3_25TRPF	4.3	A, B, C	400	0.20
NMC-Q0201NPO4R4_25TRPF	4.4	A, B, C	400	0.20
NMC-Q0201NPO4R5_25TRPF	4.5	A, B, C	400	0.20
NMC-Q0201NPO4R6_25TRPF	4.6	A, B, C	400	0.20
NMC-Q0201NPO4R7_25TRPF	4.7	A, B, C	400	0.20
NMC-Q0201NPO4R7_25TRPF	4.7	A, B, C	400	0.20
NMC-Q0201NPO4R8_25TRPF	4.8	A, B, C	400	0.20
NMC-Q0201NPO4R9_25TRPF	4.9	A, B, C	400	0.20
NMC-Q0201NPO5R1_25TRPF	5.1	A, B, C	400	0.20

*Typical Q & ESR

0201 25 Volt Standard Values and Characteristics

NIC PART NUMBER	CAPACITANCE VALUE (pF)	AVAILABLE TOLERANCE	Q FACTOR (typ. @ 1GHz)*	ESR Ω (typ. @ 1GHz)*
NMC-Q0201NPO5R2_25TRPF	5.2	A, B, C	400	0.20
NMC-Q0201NPO5R3_25TRPF	5.3	A, B, C	400	0.20
NMC-Q0201NPO5R4_25TRPF	5.4	A, B, C	400	0.20
NMC-Q0201NPO5R6_25TRPF	5.6	B, C, D	350	0.15
NMC-Q0201NPO5R7_25TRPF	5.7	B, C, D	350	0.15
NMC-Q0201NPO5R9_25TRPF	5.9	B, C, D	350	0.15
NMC-Q0201NPO6R0_25TRPF	6.0	B, C, D	350	0.15
NMC-Q0201NPO6R1_25TRPF	6.1	B, C, D	350	0.15
NMC-Q0201NPO6R2_25TRPF	6.2	B, C, D	350	0.15
NMC-Q0201NPO6R3_25TRPF	6.3	B, C, D	350	0.15
NMC-Q0201NPO6R4_25TRPF	6.4	B, C, D	350	0.15
NMC-Q0201NPO6R6_25TRPF	6.6	B, C, D	350	0.15
NMC-Q0201NPO6R8_25TRPF	6.8	B, C, D	350	0.15
NMC-Q0201NPO6R9_25TRPF	6.9	B, C, D	350	0.15
NMC-Q0201NPO7R0_25TRPF	7.0	B, C, D	350	0.15
NMC-Q0201NPO7R1_25TRPF	7.1	B, C, D	350	0.15
NMC-Q0201NPO7R2_25TRPF	7.2	B, C, D	350	0.15
NMC-Q0201NPO7R3_25TRPF	7.3	B, C, D	350	0.15
NMC-Q0201NPO7R4_25TRPF	7.4	B, C, D	350	0.15
NMC-Q0201NPO7R5_25TRPF	7.5	B, C, D	350	0.15
NMC-Q0201NPO7R6_25TRPF	7.6	B, C, D	350	0.15
NMC-Q0201NPO7R7_25TRPF	7.7	B, C, D	350	0.15
NMC-Q0201NPO7R8_25TRPF	7.8	B, C, D	350	0.15
NMC-Q0201NPO8R0_25TRPF	8.0	B, C, D	350	0.15
NMC-Q0201NPO8R1_25TRPF	8.1	B, C, D	300	0.15
NMC-Q0201NPO8R2_25TRPF	8.2	B, C, D	300	0.15
NMC-Q0201NPO8R3_25TRPF	8.3	B, C, D	300	0.15
NMC-Q0201NPO8R4_25TRPF	8.4	B, C, D	300	0.15
NMC-Q0201NPO8R5_25TRPF	8.5	B, C, D	300	0.15
NMC-Q0201NPO8R6_25TRPF	8.6	B, C, D	300	0.15
NMC-Q0201NPO8R7_25TRPF	8.7	B, C, D	300	0.15
NMC-Q0201NPO8R8_25TRPF	8.8	B, C, D	300	0.15
NMC-Q0201NPO8R9_25TRPF	8.9	B, C, D	300	0.15
NMC-Q0201NPO9R0_25TRPF	9.0	B, C, D	300	0.15
NMC-Q0201NPO9R1_25TRPF	9.1	B, C, D	300	0.15
NMC-Q0201NPO9R2_25TRPF	9.2	B, C, D	300	0.15
NMC-Q0201NPO9R3_25TRPF	9.3	B, C, D	300	0.15
NMC-Q0201NPO9R4_25TRPF	9.4	B, C, D	300	0.15
NMC-Q0201NPO9R5_25TRPF	9.5	B, C, D	300	0.15
NMC-Q0201NPO9R6_25TRPF	9.6	B, C, D	300	0.15
NMC-Q0201NPO9R7_25TRPF	9.7	B, C, D	300	0.15
NMC-Q0201NPO9R8_25TRPF	9.8	B, C, D	300	0.15
NMC-Q0201NPO9R9_25TRPF	9.9	B, C, D	300	0.15
NMC-Q0201NPO100_25TRPF	10	F, G, J	300	0.10
NMC-Q0201NPO110_25TRPF	11	F, G, J	300	0.10
NMC-Q0201NPO120_25TRPF	12	F, G, J	300	0.10
NMC-Q0201NPO130_25TRPF	13	F, G, J	300	0.10
NMC-Q0201NPO150_25TRPF	15	F, G, J	250	0.10
NMC-Q0201NPO160_25TRPF	16	F, G, J	300	0.10
NMC-Q0201NPO180_25TRPF	18	F, G, J	250	0.10
NMC-Q0201NPO200_25TRPF	20	F, G, J	250	0.10
NMC-Q0201NPO220_25TRPF	22	F, G, J	250	0.10

*Typical Q & ESR

0201 25 Volt Standard Values and Characteristics

NIC PART NUMBER	CAPACITANCE VALUE (pF)	AVAILABLE TOLERANCE	Q FACTOR (typ. @ 1GHz)*	ESR Ω (typ. @ 1GHz)*
NMC-Q0201NPO240_25TRPF	24	F, G, J	250	0.10
NMC-Q0201NPO270_25TRPF	27	F, G, J	250	0.10
NMC-Q0201NPO300_25TRPF	30	F, G, J	250	0.10
NMC-Q0201NPO330_25TRPF	33	F, G, J	250	0.10

*Typical Q & ESR

0201 50 Volt Standard Values and Characteristics

NIC PART NUMBER	CAPACITANCE VALUE (pF)	AVAILABLE TOLERANCE	Q FACTOR (typ. @ 1GHz)*	ESR Ω (typ. @ 1GHz)*
NMC-Q0201NPO0R1_50TRPF	0.1	B	400	2.2
NMC-Q0201NPO0R2_50TRPF	0.2	A, B	400	1.8
NMC-Q0201NPO0R3_50TRPF	0.3	A, B	400	0.95
NMC-Q0201NPO0R4_50TRPF	0.4	A, B	400	0.75
NMC-Q0201NPO0R5_50TRPF	0.5	A, B, C	400	0.50
NMC-Q0201NPO0R6_50TRPF	0.6	A, B, C	400	0.45
NMC-Q0201NPO0R7_50TRPF	0.7	A, B, C	400	0.40
NMC-Q0201NPO0R8_50TRPF	0.8	A, B, C	400	0.40
NMC-Q0201NPO0R9_50TRPF	0.9	A, B, C	400	0.35
NMC-Q0201NPO1R0_50TRPF	1.0	A, B, C	400	0.35
NMC-Q0201NPO1R1_50TRPF	1.1	A, B, C	400	0.35
NMC-Q0201NPO1R2_50TRPF	1.2	A, B, C	400	0.35
NMC-Q0201NPO1R3_50TRPF	1.3	A, B, C	400	0.35
NMC-Q0201NPO1R4_50TRPF	1.4	A, B, C	400	0.35
NMC-Q0201NPO1R5_50TRPF	1.5	A, B, C	400	0.30
NMC-Q0201NPO1R6_50TRPF	1.6	A, B, C	400	0.30
NMC-Q0201NPO1R7_50TRPF	1.7	A, B, C	400	0.30
NMC-Q0201NPO1R8_50TRPF	1.8	A, B, C	400	0.30
NMC-Q0201NPO1R9_50TRPF	1.9	A, B, C	400	0.30
NMC-Q0201NPO2R0_50TRPF	2.0	A, B, C	400	0.30
NMC-Q0201NPO2R1_50TRPF	2.1	A, B, C	400	0.30
NMC-Q0201NPO2R2_50TRPF	2.2	A, B, C	400	0.25
NMC-Q0201NPO2R3_50TRPF	2.3	A, B, C	400	0.25
NMC-Q0201NPO2R4_50TRPF	2.4	A, B, C	400	0.25
NMC-Q0201NPO2R5_50TRPF	2.5	A, B, C	400	0.25
NMC-Q0201NPO2R6_50TRPF	2.6	A, B, C	400	0.25
NMC-Q0201NPO2R7_50TRPF	2.7	A, B, C	400	0.25
NMC-Q0201NPO2R8_50TRPF	2.8	A, B, C	400	0.25
NMC-Q0201NPO2R9_50TRPF	2.9	A, B, C	400	0.25
NMC-Q0201NPO3R0_50TRPF	3.0	A, B, C	400	0.25
NMC-Q0201NPO3R1_50TRPF	3.1	A, B, C	400	0.25
NMC-Q0201NPO3R2_50TRPF	3.2	A, B, C	400	0.25
NMC-Q0201NPO3R3_50TRPF	3.3	A, B, C	400	0.25
NMC-Q0201NPO3R4_50TRPF	3.4	A, B, C	400	0.25
NMC-Q0201NPO3R5_50TRPF	3.5	A, B, C	400	0.25
NMC-Q0201NPO3R6_50TRPF	3.6	A, B, C	400	0.25
NMC-Q0201NPO3R7_50TRPF	3.7	A, B, C	400	0.25
NMC-Q0201NPO3R8_50TRPF	3.8	A, B, C	400	0.25
NMC-Q0201NPO3R9_50TRPF	3.9	A, B, C	400	0.20
NMC-Q0201NPO4R0_50TRPF	4.0	A, B, C	400	0.20
NMC-Q0201NPO4R1_50TRPF	4.1	A, B, C	400	0.20
NMC-Q0201NPO4R2_50TRPF	4.2	A, B, C	400	0.20
NMC-Q0201NPO4R3_50TRPF	4.3	A, B, C	400	0.20
NMC-Q0201NPO4R4_50TRPF	4.4	A, B, C	400	0.20
NMC-Q0201NPO4R5_50TRPF	4.5	A, B, C	400	0.20
NMC-Q0201NPO4R6_50TRPF	4.6	A, B, C	400	0.20
NMC-Q0201NPO4R7_50TRPF	4.7	A, B, C	400	0.20
NMC-Q0201NPO4R7_50TRPF	4.7	A, B, C	400	0.20
NMC-Q0201NPO4R8_50TRPF	4.8	A, B, C	400	0.20
NMC-Q0201NPO4R9_50TRPF	4.9	A, B, C	400	0.20
NMC-Q0201NPO5R1_50TRPF	5.1	A, B, C	400	0.20

*Typical Q & ESR

0201 50 Volt Standard Values and Characteristics

NIC PART NUMBER	CAPACITANCE VALUE (pF)	AVAILABLE TOLERANCE	Q FACTOR (typ. @ 1GHz)*	ESR Ω (typ. @ 1GHz)*
NMC-Q0201NPO5R2_50TRPF	5.2	A, B, C	400	0.20
NMC-Q0201NPO5R3_50TRPF	5.3	A, B, C	400	0.20
NMC-Q0201NPO5R4_50TRPF	5.4	A, B, C	400	0.20
NMC-Q0201NPO5R6_50TRPF	5.6	B, C, D	350	0.15
NMC-Q0201NPO5R7_50TRPF	5.7	B, C, D	350	0.15
NMC-Q0201NPO5R9_50TRPF	5.9	B, C, D	350	0.15
NMC-Q0201NPO6R0_50TRPF	6.0	B, C, D	350	0.15
NMC-Q0201NPO6R1_50TRPF	6.1	B, C, D	350	0.15
NMC-Q0201NPO6R2_50TRPF	6.2	B, C, D	350	0.15
NMC-Q0201NPO6R3_50TRPF	6.3	B, C, D	350	0.15
NMC-Q0201NPO6R4_50TRPF	6.4	B, C, D	350	0.15
NMC-Q0201NPO6R6_50TRPF	6.6	B, C, D	350	0.15
NMC-Q0201NPO6R8_50TRPF	6.8	B, C, D	350	0.15
NMC-Q0201NPO6R9_50TRPF	6.9	B, C, D	350	0.15
NMC-Q0201NPO7R0_50TRPF	7.0	B, C, D	350	0.15
NMC-Q0201NPO7R1_50TRPF	7.1	B, C, D	350	0.15
NMC-Q0201NPO7R2_50TRPF	7.2	B, C, D	350	0.15
NMC-Q0201NPO7R3_50TRPF	7.3	B, C, D	350	0.15
NMC-Q0201NPO7R4_50TRPF	7.4	B, C, D	350	0.15
NMC-Q0201NPO7R5_50TRPF	7.5	B, C, D	350	0.15
NMC-Q0201NPO7R6_50TRPF	7.6	B, C, D	350	0.15
NMC-Q0201NPO7R7_50TRPF	7.7	B, C, D	350	0.15
NMC-Q0201NPO7R8_50TRPF	7.8	B, C, D	350	0.15
NMC-Q0201NPO8R0_50TRPF	8.0	B, C, D	350	0.15
NMC-Q0201NPO8R1_50TRPF	8.1	B, C, D	300	0.15
NMC-Q0201NPO8R2_50TRPF	8.2	B, C, D	300	0.15
NMC-Q0201NPO8R3_50TRPF	8.3	B, C, D	300	0.15
NMC-Q0201NPO8R4_50TRPF	8.4	B, C, D	300	0.15
NMC-Q0201NPO8R5_50TRPF	8.5	B, C, D	300	0.15
NMC-Q0201NPO8R6_50TRPF	8.6	B, C, D	300	0.15
NMC-Q0201NPO8R7_50TRPF	8.7	B, C, D	300	0.15
NMC-Q0201NPO8R8_50TRPF	8.8	B, C, D	300	0.15
NMC-Q0201NPO8R9_50TRPF	8.9	B, C, D	300	0.15
NMC-Q0201NPO9R0_50TRPF	9.0	B, C, D	300	0.15
NMC-Q0201NPO9R1_50TRPF	9.1	B, C, D	300	0.15
NMC-Q0201NPO9R2_50TRPF	9.2	B, C, D	300	0.15
NMC-Q0201NPO9R3_50TRPF	9.3	B, C, D	300	0.15
NMC-Q0201NPO9R4_50TRPF	9.4	B, C, D	300	0.15
NMC-Q0201NPO9R5_50TRPF	9.5	B, C, D	300	0.15
NMC-Q0201NPO9R6_50TRPF	9.6	B, C, D	300	0.15
NMC-Q0201NPO9R7_50TRPF	9.7	B, C, D	300	0.15
NMC-Q0201NPO9R8_50TRPF	9.8	B, C, D	300	0.15
NMC-Q0201NPO9R9_50TRPF	9.9	B, C, D	300	0.15
NMC-Q0201NPO100_50TRPF	10	F, G, J	300	0.10
NMC-Q0201NPO110_50TRPF	11	F, G, J	300	0.10
NMC-Q0201NPO120_50TRPF	12	F, G, J	300	0.10
NMC-Q0201NPO130_50TRPF	13	F, G, J	300	0.10
NMC-Q0201NPO150_50TRPF	15	F, G, J	250	0.10
NMC-Q0201NPO160_50TRPF	16	F, G, J	300	0.10
NMC-Q0201NPO180_50TRPF	18	F, G, J	250	0.10
NMC-Q0201NPO200_50TRPF	20	F, G, J	250	0.10
NMC-Q0201NPO220_50TRPF	22	F, G, J	250	0.10

*Typical Q & ESR

0402 25 Volt Standard Values and Characteristics

NIC PART NUMBER	CAPACITANCE VALUE (pF)	AVAILABLE TOLERANCE	Q FACTOR (typ. @ 1GHz)*	ESR Ω (typ. @ 1GHz)*
NMC-Q0402NPO0R1_25TRPF	0.1	B	400	2.50
NMC-Q0402NPO0R2_25TRPF	0.2	A, B	400	1.60
NMC-Q0402NPO0R3_25TRPF	0.3	A, B	400	1.10
NMC-Q0402NPO0R4_25TRPF	0.4	A, B	400	0.80
NMC-Q0402NPO0R5_25TRPF	0.5	A, B, C	400	0.50
NMC-Q0402NPO0R6_25TRPF	0.6	A, B, C	400	0.40
NMC-Q0402NPO0R7_25TRPF	0.7	A, B, C	400	0.30
NMC-Q0402NPO0R8_25TRPF	0.8	A, B, C	400	0.25
NMC-Q0402NPO0R9_25TRPF	0.9	A, B, C	400	0.20
NMC-Q0402NPO1R0_25TRPF	1.0	A, B, C	400	0.20
NMC-Q0402NPO1R2_25TRPF	1.2	A, B, C	400	0.20
NMC-Q0402NPO1R5_25TRPF	1.5	A, B, C	400	0.20
NMC-Q0402NPO1R6_25TRPF	1.6	A, B, C	400	0.20
NMC-Q0402NPO1R7_25TRPF	1.7	A, B, C	400	0.20
NMC-Q0402NPO1R8_25TRPF	1.8	A, B, C	400	0.20
NMC-Q0402NPO1R9_25TRPF	1.9	A, B, C	400	0.20
NMC-Q0402NPO2R0_25TRPF	2.0	A, B, C	400	0.20
NMC-Q0402NPO2R1_25TRPF	2.1	A, B, C	400	0.20
NMC-Q0402NPO2R2_25TRPF	2.2	A, B, C	400	0.20
NMC-Q0402NPO2R3_25TRPF	2.3	A, B, C	400	0.20
NMC-Q0402NPO2R4_25TRPF	2.4	A, B, C	400	0.20
NMC-Q0402NPO2R7_25TRPF	2.7	A, B, C	400	0.20
NMC-Q0402NPO3R3_25TRPF	3.3	A, B, C	400	0.15
NMC-Q0402NPO3R6_25TRPF	3.6	A, B, C	400	0.15
NMC-Q0402NPO3R9_25TRPF	3.9	A, B, C	350	0.15
NMC-Q0402NPO4R7_25TRPF	4.7	A, B, C	300	0.15
NMC-Q0402NPO5R1_25TRPF	5.1	B, C, D	300	0.15
NMC-Q0402NPO5R6_25TRPF	5.6	B, C, D	300	0.15
NMC-Q0402NPO6R8_25TRPF	6.8	B, C, D	250	0.15
NMC-Q0402NPO8R2_25TRPF	8.2	B, C, D	250	0.10
NMC-Q0402NPO100_25TRPF	10	F, G, J	250	0.10
NMC-Q0402NPO120_25TRPF	12	F, G, J	250	0.10
NMC-Q0402NPO150_25TRPF	15	F, G, J	250	0.10
NMC-Q0402NPO180_25TRPF	18	F, G, J	250	0.10
NMC-Q0402NPO220_25TRPF	22	F, G, J	250	0.10
NMC-Q0402NPO270_25TRPF	27	F, G, J	250	0.10
NMC-Q0402NPO300_25TRPF	30	F, G, J	250	0.10
NMC-Q0402NPO330_25TRPF	33	F, G, J	250	0.10
NMC-Q0402NPO390_25TRPF	39	F, G, J	150	0.10
NMC-Q0402NPO430_25TRPF	43	F, G, J	150	0.10
NMC-Q0402NPO470_25TRPF	47	F, G, J	30	0.10
NMC-Q0402NPO510_25TRPF	51	F, G, J	30	0.10
NMC-Q0402NPO560_25TRPF	56	F, G, J	30	0.10
NMC-Q0402NPO680_25TRPF	68	F, G, J	15	0.10
NMC-Q0402NPO820_25TRPF	82	F, G, J	15	0.10
NMC-Q0402NPO101_25TRPF	100	F, G, J	15	0.10

*Typical Q & ESR

0402 50 Volt Standard Values and Characteristics

NIC PART NUMBER	CAPACITANCE VALUE (pF)	AVAILABLE TOLERANCE	Q FACTOR (typ. @ 1GHz)*	ESR Ω (typ. @ 1GHz)*
NMC-Q0402NPO0R1_50TRPF	0.1	B	400	2.50
NMC-Q0402NPO0R2_50TRPF	0.2	A, B	400	1.60
NMC-Q0402NPO0R3_50TRPF	0.3	A, B	400	1.10
NMC-Q0402NPO0R4_50TRPF	0.4	A, B	400	0.80
NMC-Q0402NPO0R5_50TRPF	0.5	A, B, C	400	0.50
NMC-Q0402NPO0R6_50TRPF	0.6	A, B, C	400	0.40
NMC-Q0402NPO0R7_50TRPF	0.7	A, B, C	400	0.30
NMC-Q0402NPO0R8_50TRPF	0.8	A, B, C	400	0.25
NMC-Q0402NPO0R9_50TRPF	0.9	A, B, C	400	0.20
NMC-Q0402NPO1R0_50TRPF	1.0	A, B, C	400	0.20
NMC-Q0402NPO1R2_50TRPF	1.2	A, B, C	400	0.20
NMC-Q0402NPO1R5_50TRPF	1.5	A, B, C	400	0.20
NMC-Q0402NPO1R6_50TRPF	1.6	A, B, C	400	0.20
NMC-Q0402NPO1R7_50TRPF	1.7	A, B, C	400	0.20
NMC-Q0402NPO1R8_50TRPF	1.8	A, B, C	400	0.20
NMC-Q0402NPO1R9_50TRPF	1.9	A, B, C	400	0.20
NMC-Q0402NPO2R0_50TRPF	2.0	A, B, C	400	0.20
NMC-Q0402NPO2R1_50TRPF	2.1	A, B, C	400	0.20
NMC-Q0402NPO2R2_50TRPF	2.2	A, B, C	400	0.20
NMC-Q0402NPO2R3_50TRPF	2.3	A, B, C	400	0.20
NMC-Q0402NPO2R4_50TRPF	2.4	A, B, C	400	0.20
NMC-Q0402NPO2R7_50TRPF	2.7	A, B, C	400	0.20
NMC-Q0402NPO3R0_50TRPF	3.0	A, B, C	400	0.15
NMC-Q0402NPO3R3_50TRPF	3.3	A, B, C	400	0.15
NMC-Q0402NPO3R6_50TRPF	3.6	A, B, C	400	0.15
NMC-Q0402NPO3R9_50TRPF	3.9	A, B, C	350	0.15
NMC-Q0402NPO4R7_50TRPF	4.7	A, B, C	300	0.15
NMC-Q0402NPO5R1_50TRPF	5.1	B, C, D	300	0.15
NMC-Q0402NPO5R6_50TRPF	5.6	B, C, D	300	0.15
NMC-Q0402NPO6R8_50TRPF	6.8	B, C, D	250	0.15
NMC-Q0402NPO8R2_50TRPF	8.2	B, C, D	250	0.10
NMC-Q0402NPO100_50TRPF	10	F, G, J	250	0.10
NMC-Q0402NPO120_50TRPF	12	F, G, J	250	0.10
NMC-Q0402NPO150_50TRPF	15	F, G, J	250	0.10
NMC-Q0402NPO180_50TRPF	18	F, G, J	250	0.10
NMC-Q0402NPO220_50TRPF	22	F, G, J	250	0.10
NMC-Q0402NPO270_50TRPF	27	F, G, J	250	0.10
NMC-Q0402NPO300_50TRPF	30	F, G, J	250	0.10
NMC-Q0402NPO330_50TRPF	33	F, G, J	250	0.10
NMC-Q0402NPO390_50TRPF	39	F, G, J	150	0.10
NMC-Q0402NPO430_50TRPF	43	F, G, J	150	0.10
NMC-Q0402NPO470_50TRPF	47	F, G, J	30	0.10
NMC-Q0402NPO510_50TRPF	51	F, G, J	30	0.10
NMC-Q0402NPO560_50TRPF	56	F, G, J	30	0.10

*Typical Q & ESR

0402 100 Volt Standard Values and Characteristics

NIC PART NUMBER	CAPACITANCE VALUE (pF)	AVAILABLE TOLERANCE	Q FACTOR (typ. @ 1GHz)*	ESR Ω (typ. @ 1GHz)*
NMC-Q0402NPO0R1_100TRPF	0.1	B	400	2.50
NMC-Q0402NPO0R2_100TRPF	0.2	A, B	400	1.60
NMC-Q0402NPO0R3_100TRPF	0.3	A, B	400	1.10
NMC-Q0402NPO0R4_100TRPF	0.4	A, B	400	0.80
NMC-Q0402NPO0R5_100TRPF	0.5	A, B, C	400	0.50
NMC-Q0402NPO0R6_100TRPF	0.6	A, B, C	400	0.40
NMC-Q0402NPO0R7_100TRPF	0.7	A, B, C	400	0.30
NMC-Q0402NPO0R8_100TRPF	0.8	A, B, C	400	0.25
NMC-Q0402NPO0R9_100TRPF	0.9	A, B, C	400	0.20
NMC-Q0402NPO1R0_100TRPF	1.0	A, B, C	400	0.20
NMC-Q0402NPO1R2_100TRPF	1.2	A, B, C	400	0.20
NMC-Q0402NPO1R5_100TRPF	1.5	A, B, C	400	0.20
NMC-Q0402NPO1R6_100TRPF	1.6	A, B, C	400	0.20
NMC-Q0402NPO1R7_100TRPF	1.7	A, B, C	400	0.20
NMC-Q0402NPO1R8_100TRPF	1.8	A, B, C	400	0.20
NMC-Q0402NPO1R9_100TRPF	1.9	A, B, C	400	0.20
NMC-Q0402NPO2R0_100TRPF	2.0	A, B, C	400	0.20
NMC-Q0402NPO2R1_100TRPF	2.1	A, B, C	400	0.20
NMC-Q0402NPO2R2_100TRPF	2.2	A, B, C	400	0.20
NMC-Q0402NPO2R3_100TRPF	2.3	A, B, C	400	0.20
NMC-Q0402NPO2R4_100TRPF	2.4	A, B, C	400	0.20
NMC-Q0402NPO2R7_100TRPF	2.7	A, B, C	400	0.20
NMC-Q0402NPO3R0_100TRPF	3.0	A, B, C	400	0.15
NMC-Q0402NPO3R3_100TRPF	3.3	A, B, C	400	0.15
NMC-Q0402NPO3R6_100TRPF	3.6	A, B, C	400	0.15
NMC-Q0402NPO3R9_100TRPF	3.9	A, B, C	350	0.15
NMC-Q0402NPO4R7_100TRPF	4.7	A, B, C	300	0.15
NMC-Q0402NPO5R1_100TRPF	5.1	B, C, D	300	0.15
NMC-Q0402NPO5R6_100TRPF	5.6	B, C, D	300	0.15
NMC-Q0402NPO6R8_100TRPF	6.8	B, C, D	250	0.15
NMC-Q0402NPO8R2_100TRPF	8.2	B, C, D	250	0.10
NMC-Q0402NPO100_100TRPF	10	F, G, J	250	0.10
NMC-Q0402NPO120_100TRPF	12	F, G, J	250	0.10
NMC-Q0402NPO150_100TRPF	15	F, G, J	250	0.10
NMC-Q0402NPO180_100TRPF	18	F, G, J	250	0.10
NMC-Q0402NPO220_100TRPF	22	F, G, J	250	0.10
NMC-Q0402NPO270_100TRPF	27	F, G, J	250	0.10
NMC-Q0402NPO300_100TRPF	30	F, G, J	250	0.10
NMC-Q0402NPO330_100TRPF	33	F, G, J	250	0.10
NMC-Q0402NPO390_100TRPF	39	F, G, J	150	0.10
NMC-Q0402NPO430_100TRPF	43	F, G, J	150	0.10
NMC-Q0402NPO470_100TRPF	47	F, G, J	30	0.10
NMC-Q0402NPO510_100TRPF	51	F, G, J	30	0.10
NMC-Q0402NPO560_100TRPF	56	F, G, J	30	0.10

*Typical Q & ESR

0402 200 Volt Standard Values and Characteristics

NIC PART NUMBER	CAPACITANCE VALUE (pF)	AVAILABLE TOLERANCE	Q FACTOR (typ. @ 1GHz)*	ESR Ω (typ. @ 1GHz)*
NMC-Q0402NPO0R1_200TRPF	0.1	B	400	2.50
NMC-Q0402NPO0R2_200TRPF	0.2	A, B	400	1.60
NMC-Q0402NPO0R3_200TRPF	0.3	A, B	400	1.10
NMC-Q0402NPO0R4_200TRPF	0.4	A, B	400	0.80
NMC-Q0402NPO0R5_200TRPF	0.5	A, B, C	400	0.50
NMC-Q0402NPO0R6_200TRPF	0.6	A, B, C	400	0.40
NMC-Q0402NPO0R7_200TRPF	0.7	A, B, C	400	0.30
NMC-Q0402NPO0R8_200TRPF	0.8	A, B, C	400	0.25
NMC-Q0402NPO0R9_200TRPF	0.9	A, B, C	400	0.20
NMC-Q0402NPO1R0_200TRPF	1.0	A, B, C	400	0.20
NMC-Q0402NPO1R2_200TRPF	1.2	A, B, C	400	0.20
NMC-Q0402NPO1R5_200TRPF	1.5	A, B, C	400	0.20
NMC-Q0402NPO1R6_200TRPF	1.6	A, B, C	400	0.20
NMC-Q0402NPO1R7_200TRPF	1.7	A, B, C	400	0.20
NMC-Q0402NPO1R8_200TRPF	1.8	A, B, C	400	0.20
NMC-Q0402NPO1R9_200TRPF	1.9	A, B, C	400	0.20
NMC-Q0402NPO2R0_200TRPF	2.0	A, B, C	400	0.20
NMC-Q0402NPO2R1_200TRPF	2.1	A, B, C	400	0.20
NMC-Q0402NPO2R2_200TRPF	2.2	A, B, C	400	0.20
NMC-Q0402NPO2R3_200TRPF	2.3	A, B, C	400	0.20
NMC-Q0402NPO2R4_200TRPF	2.4	A, B, C	400	0.20
NMC-Q0402NPO2R7_200TRPF	2.7	A, B, C	400	0.20
NMC-Q0402NPO3R0_200TRPF	3.0	A, B, C	400	0.15
NMC-Q0402NPO3R3_200TRPF	3.3	A, B, C	400	0.15
NMC-Q0402NPO3R6_200TRPF	3.6	A, B, C	400	0.15
NMC-Q0402NPO3R9_200TRPF	3.9	A, B, C	350	0.15
NMC-Q0402NPO4R7_200TRPF	4.7	A, B, C	300	0.15
NMC-Q0402NPO5R1_200TRPF	5.1	B, C, D	300	0.15
NMC-Q0402NPO5R6_200TRPF	5.6	B, C, D	300	0.15
NMC-Q0402NPO6R8_200TRPF	6.8	B, C, D	250	0.15
NMC-Q0402NPO8R2_200TRPF	8.2	B, C, D	250	0.10
NMC-Q0402NPO100_200TRPF	10	F, G, J	250	0.10
NMC-Q0402NPO120_200TRPF	12	F, G, J	250	0.10
NMC-Q0402NPO150_200TRPF	15	F, G, J	250	0.10
NMC-Q0402NPO180_200TRPF	18	F, G, J	250	0.10
NMC-Q0402NPO220_200TRPF	22	F, G, J	250	0.10
NMC-Q0402NPO270_200TRPF	27	F, G, J	250	0.10
NMC-Q0402NPO300_200TRPF	30	F, G, J	250	0.10
NMC-Q0402NPO330_200TRPF	33	F, G, J	250	0.10

*Typical Q & ESR

0505 250 Volt Standard Values and Characteristics

NIC PART NUMBER	CAPACITANCE VALUE (pF)	AVAILABLE TOLERANCE	Q FACTOR (typ. @ 1GHz)*	ESR Ω (typ. @ 1GHz)*
NMC-Q0505NPO0R4_250TRPF	0.4	A, B, C	800	0.40
NMC-Q0505NPO0R5_250TRPF	0.5	A, B, C	800	0.40
NMC-Q0505NPO0R6_250TRPF	0.6	A, B, C	800	0.40
NMC-Q0505NPO0R7_250TRPF	0.7	A, B, C	700	0.30
NMC-Q0505NPO0R8_250TRPF	0.8	A, B, C	700	0.30
NMC-Q0505NPO0R9_250TRPF	0.9	A, B, C	700	0.30
NMC-Q0505NPO1R0_250TRPF	1.0	A, B, C	700	0.20
NMC-Q0505NPO1R2_250TRPF	1.2	A, B, C	700	0.20
NMC-Q0505NPO1R5_250TRPF	1.5	A, B, C	700	0.20
NMC-Q0505NPO1R8_250TRPF	1.8	A, B, C	700	0.10
NMC-Q0505NPO2R2_250TRPF	2.2	A, B, C	500	0.10
NMC-Q0505NPO2R7_250TRPF	2.7	A, B, C	500	0.10
NMC-Q0505NPO3R3_250TRPF	3.3	A, B, C	500	0.10
NMC-Q0505NPO3R9_250TRPF	3.9	A, B, C	500	0.10
NMC-Q0505NPO4R7_250TRPF	4.7	A, B, C	500	0.10
NMC-Q0505NPO5R6_250TRPF	5.6	B, C, D	400	0.10
NMC-Q0505NPO6R8_250TRPF	6.8	B, C, D	400	0.10
NMC-Q0505NPO8R2_250TRPF	8.2	B, C, D	300	0.10
NMC-Q0505NPO100_250TRPF	10	F, G, J	300	0.10
NMC-Q0505NPO120_250TRPF	12	F, G, J	300	0.10
NMC-Q0505NPO150_250TRPF	15	F, G, J	200	0.10
NMC-Q0505NPO180_250TRPF	18	F, G, J	200	0.10
NMC-Q0505NPO220_250TRPF	22	F, G, J	200	0.10
NMC-Q0505NPO270_250TRPF	27	F, G, J	200	0.10
NMC-Q0505NPO330_250TRPF	33	F, G, J	50	0.10
NMC-Q0505NPO390_250TRPF	39	F, G, J	50	0.10
NMC-Q0505NPO470_250TRPF	47	F, G, J	50	0.10
NMC-Q0505NPO560_250TRPF	56	F, G, J	30	0.10
NMC-Q0505NPO680_250TRPF	68	F, G, J	30	0.10
NMC-Q0505NPO820_250TRPF	82	F, G, J	10	0.10
NMC-Q0505NPO101_250TRPF	100	F, G, J	10	0.10

Contact NIC for values not shown.

*Typical Q & ESR

0603 50 Volt Standard Values and Characteristics

NIC PART NUMBER	CAPACITANCE VALUE (pF)	AVAILABLE TOLERANCE	Q FACTOR (typ. @ 1GHz)*	ESR Ω (typ. @ 1GHz)*
NMC-Q0603NPO0R3_50TRPF	0.3	B	400	0.90
NMC-Q0603NPO0R4_50TRPF	0.4	A, B	400	0.90
NMC-Q0603NPO0R45_50TRPF	0.45	A, B	400	0.90
NMC-Q0603NPO0R5_50TRPF	0.5	A, B, C	400	0.80
NMC-Q0603NPO0R6_50TRPF	0.6	A, B, C	400	0.70
NMC-Q0603NPO0R7_50TRPF	0.7	A, B, C	400	0.50
NMC-Q0603NPO0R8_50TRPF	0.8	A, B, C	400	0.50
NMC-Q0603NPO0R9_50TRPF	0.9	A, B, C	400	0.40
NMC-Q0603NPO1R0_50TRPF	1.0	A, B, C	400	0.30
NMC-Q0603NPO1R2_50TRPF	1.2	A, B, C	400	0.20
NMC-Q0603NPO1R5_50TRPF	1.5	A, B, C	400	0.20
NMC-Q0603NPO1R6_50TRPF	1.6	A, B, C	400	0.20
NMC-Q0603NPO1R8_50TRPF	1.8	A, B, C	400	0.20
NMC-Q0603NPO2R0_50TRPF	2.0	A, B, C	400	0.20
NMC-Q0603NPO2R2_50TRPF	2.2	A, B, C	400	0.20
NMC-Q0603NPO2R7_50TRPF	2.7	A, B, C	400	0.15
NMC-Q0603NPO3R3_50TRPF	3.3	A, B, C	350	0.15
NMC-Q0603NPO3R9_50TRPF	3.9	A, B, C	350	0.10
NMC-Q0603NPO4R3_50TRPF	4.3	A, B, C	300	0.10
NMC-Q0603NPO4R7_50TRPF	4.7	A, B, C	300	0.10
NMC-Q0603NPO5R6_50TRPF	5.6	B, C, D	300	0.10
NMC-Q0603NPO6R8_50TRPF	6.8	B, C, D	250	0.10
NMC-Q0603NPO8R2_50TRPF	8.2	B, C, D	200	0.10
NMC-Q0603NPO100_50TRPF	10	F, G, J	150	0.10
NMC-Q0603NPO120_50TRPF	12	F, G, J	100	0.10
NMC-Q0603NPO150_50TRPF	15	F, G, J	100	0.10
NMC-Q0603NPO180_50TRPF	18	F, G, J	100	0.10
NMC-Q0603NPO220_50TRPF	22	F, G, J	100	0.10
NMC-Q0603NPO270_50TRPF	27	F, G, J	75	0.10
NMC-Q0603NPO330_50TRPF	33	F, G, J	60	0.10
NMC-Q0603NPO390_50TRPF	39	F, G, J	40	0.10
NMC-Q0603NPO430_50TRPF	43	F, G, J	25	0.10
NMC-Q0603NPO470_50TRPF	47	F, G, J	25	0.10
NMC-Q0603NPO560_50TRPF	56	F, G, J	10	0.10
NMC-Q0603NPO680_50TRPF	68	F, G, J	3	0.10
NMC-Q0603NPO820_50TRPF	82	F, G, J	3	0.10
NMC-Q0603NPO101_50TRPF	100	F, G, J	3	0.10

*Typical Q & ESR

0603 100 Volt Standard Values and Characteristics

NIC PART NUMBER	CAPACITANCE VALUE (pF)	AVAILABLE TOLERANCE	Q FACTOR (typ. @ 1GHz)*	ESR Ω (typ. @ 1GHz)*
NMC-Q0603NPO0R3_100TRPF	0.3	B	400	0.90
NMC-Q0603NPO0R4_100TRPF	0.4	A, B	400	0.90
NMC-Q0603NPO0R5_100TRPF	0.5	A, B, C	400	0.80
NMC-Q0603NPO0R6_100TRPF	0.6	A, B, C	400	0.70
NMC-Q0603NPO0R7_100TRPF	0.7	A, B, C	400	0.50
NMC-Q0603NPO0R8_100TRPF	0.8	A, B, C	400	0.50
NMC-Q0603NPO0R9_100TRPF	0.9	A, B, C	400	0.40
NMC-Q0603NPO1R0_100TRPF	1.0	A, B, C	400	0.30
NMC-Q0603NPO1R2_100TRPF	1.2	A, B, C	400	0.20
NMC-Q0603NPO1R5_100TRPF	1.5	A, B, C	400	0.20
NMC-Q0603NPO1R8_100TRPF	1.8	A, B, C	400	0.20
NMC-Q0603NPO2R2_100TRPF	2.2	A, B, C	400	0.20
NMC-Q0603NPO2R7_100TRPF	2.7	A, B, C	400	0.15
NMC-Q0603NPO3R3_100TRPF	3.3	A, B, C	350	0.15
NMC-Q0603NPO3R9_100TRPF	3.9	A, B, C	350	0.10
NMC-Q0603NPO4R7_100TRPF	4.7	A, B, C	300	0.10
NMC-Q0603NPO5R6_100TRPF	5.6	B, C, D	300	0.10
NMC-Q0603NPO6R8_100TRPF	6.8	B, C, D	250	0.10
NMC-Q0603NPO8R2_100TRPF	8.2	B, C, D	200	0.10
NMC-Q0603NPO100_100TRPF	10	F, G, J	150	0.10
NMC-Q0603NPO120_100TRPF	12	F, G, J	100	0.10
NMC-Q0603NPO150_100TRPF	15	F, G, J	100	0.10
NMC-Q0603NPO180_100TRPF	18	F, G, J	100	0.10
NMC-Q0603NPO220_100TRPF	22	F, G, J	100	0.10
NMC-Q0603NPO270_100TRPF	27	F, G, J	75	0.10
NMC-Q0603NPO330_100TRPF	33	F, G, J	60	0.10
NMC-Q0603NPO390_100TRPF	39	F, G, J	40	0.10
NMC-Q0603NPO430_100TRPF	43	F, G, J	25	0.10
NMC-Q0603NPO470_100TRPF	47	F, G, J	25	0.10
NMC-Q0603NPO560_100TRPF	56	F, G, J	10	0.10
NMC-Q0603NPO680_100TRPF	68	F, G, J	3	0.10
NMC-Q0603NPO820_100TRPF	82	F, G, J	3	0.10
NMC-Q0603NPO101_100TRPF	100	F, G, J	3	0.10

*Typical Q & ESR

0603 250 Volt Standard Values and Characteristics

NIC PART NUMBER	CAPACITANCE VALUE (pF)	AVAILABLE TOLERANCE	Q FACTOR (typ. @ 1GHz)*	ESR Ω (@ 1GHz)*
NMC-Q0603NPO0R3_250TRPF	0.3	B	400	0.90
NMC-Q0603NPO0R4_250TRPF	0.4	A, B	400	0.90
NMC-Q0603NPO0R5_250TRPF	0.5	A, B, C	400	0.80
NMC-Q0603NPO0R6_250TRPF	0.6	A, B, C	400	0.70
NMC-Q0603NPO0R7_250TRPF	0.7	A, B, C	400	0.50
NMC-Q0603NPO0R8_250TRPF	0.8	A, B, C	400	0.50
NMC-Q0603NPO0R9_250TRPF	0.9	A, B, C	400	0.40
NMC-Q0603NPO1R0_250TRPF	1.0	A, B, C	400	0.30
NMC-Q0603NPO1R2_250TRPF	1.2	A, B, C	400	0.20
NMC-Q0603NPO1R5_250TRPF	1.5	A, B, C	400	0.20
NMC-Q0603NPO1R8_250TRPF	1.8	A, B, C	400	0.20
NMC-Q0603NPO2R2_250TRPF	2.2	A, B, C	400	0.20
NMC-Q0603NPO2R7_250TRPF	2.7	A, B, C	400	0.15
NMC-Q0603NPO3R3_250TRPF	3.3	A, B, C	350	0.15
NMC-Q0603NPO3R9_250TRPF	3.9	A, B, C	350	0.10
NMC-Q0603NPO4R7_250TRPF	4.7	A, B, C	300	0.10
NMC-Q0603NPO5R6_250TRPF	5.6	B, C, D	300	0.10
NMC-Q0603NPO6R8_250TRPF	6.8	B, C, D	250	0.10
NMC-Q0603NPO8R2_250TRPF	8.2	B, C, D	200	0.10
NMC-Q0603NPO100_250TRPF	10	F, G, J	150	0.10
NMC-Q0603NPO120_250TRPF	12	F, G, J	100	0.10
NMC-Q0603NPO150_250TRPF	15	F, G, J	100	0.10
NMC-Q0603NPO180_250TRPF	18	F, G, J	100	0.10
NMC-Q0603NPO220_250TRPF	22	F, G, J	100	0.10
NMC-Q0603NPO270_250TRPF	27	F, G, J	75	0.10
NMC-Q0603NPO330_250TRPF	33	F, G, J	60	0.10
NMC-Q0603NPO390_250TRPF	39	F, G, J	40	0.10
NMC-Q0603NPO430_250TRPF	43	F, G, J	25	0.10
NMC-Q0603NPO470_250TRPF	47	F, G, J	25	0.10
NMC-Q0603NPO560_250TRPF	56	F, G, J	10	0.10
NMC-Q0603NPO680_250TRPF	68	F, G, J	3	0.10
NMC-Q0603NPO820_250TRPF	82	F, G, J	3	0.10
NMC-Q0603NPO101_250TRPF	100	F, G, J	3	0.10

*Typical Q & ESR

0805 50 Volt Standard Values and Characteristics

NIC PART NUMBER	CAPACITANCE VALUE (pF)	AVAILABLE TOLERANCE	Q FACTOR (typ. @ 1GHz)*	ESR Ω (typ. @ 1GHz)*
NMC-Q0805NPO0R2_50TRPF	0.2	B	400	0.90
NMC-Q0805NPO0R3_50TRPF	0.3	B	400	0.90
NMC-Q0805NPO0R4_50TRPF	0.4	A, B	400	0.90
NMC-Q0805NPO0R5_50TRPF	0.5	A, B, C	400	0.80
NMC-Q0805NPO0R6_50TRPF	0.6	A, B, C	400	0.70
NMC-Q0805NPO0R7_50TRPF	0.7	A, B, C	400	0.50
NMC-Q0805NPO0R8_50TRPF	0.8	A, B, C	400	0.50
NMC-Q0805NPO0R9_50TRPF	0.9	A, B, C	400	0.40
NMC-Q0805NPO1R0_50TRPF	1.0	A, B, C	400	0.30
NMC-Q0805NPO1R2_50TRPF	1.2	A, B, C	400	0.20
NMC-Q0805NPO1R5_50TRPF	1.5	A, B, C	400	0.20
NMC-Q0805NPO1R6_50TRPF	1.6	A, B, C	400	0.20
NMC-Q0805NPO1R8_50TRPF	1.8	A, B, C	400	0.20
NMC-Q0805NPO2R0_50TRPF	2.0	A, B, C	400	0.20
NMC-Q0805NPO2R2_50TRPF	2.2	A, B, C	400	0.20
NMC-Q0805NPO2R7_50TRPF	2.7	A, B, C	400	0.15
NMC-Q0805NPO3R3_50TRPF	3.3	A, B, C	350	0.15
NMC-Q0805NPO3R9_50TRPF	3.9	A, B, C	350	0.10
NMC-Q0805NPO4R3_50TRPF	4.3	A, B, C	300	0.10
NMC-Q0805NPO4R7_50TRPF	4.7	A, B, C	300	0.10
NMC-Q0805NPO5R6_50TRPF	5.6	B, C, D	300	0.10
NMC-Q0805NPO6R8_50TRPF	6.8	B, C, D	250	0.10
NMC-Q0805NPO8R2_50TRPF	8.2	B, C, D	200	0.10
NMC-Q0805NPO100_50TRPF	10	F, G, J	150	0.10
NMC-Q0805NPO120_50TRPF	12	F, G, J	100	0.10
NMC-Q0805NPO150_50TRPF	15	F, G, J	100	0.10
NMC-Q0805NPO180_50TRPF	18	F, G, J	100	0.10
NMC-Q0805NPO220_50TRPF	22	F, G, J	100	0.10
NMC-Q0805NPO270_50TRPF	27	F, G, J	75	0.10
NMC-Q0805NPO330_50TRPF	33	F, G, J	60	0.10
NMC-Q0805NPO390_50TRPF	39	F, G, J	40	0.10
NMC-Q0805NPO430_50TRPF	43	F, G, J	25	0.10
NMC-Q0805NPO470_50TRPF	47	F, G, J	25	0.10
NMC-Q0805NPO560_50TRPF	56	F, G, J	10	0.10
NMC-Q0805NPO680_50TRPF	68	F, G, J	3	0.10
NMC-Q0805NPO820_50TRPF	82	F, G, J	3	0.10
NMC-Q0805NPO910_50TRPF	91	F, G, J	3	0.10
NMC-Q0805NPO101_50TRPF	100	F, G, J	3	0.10

*Typical Q & ESR

0805 100 Volt Standard Values and Characteristics

NIC PART NUMBER	CAPACITANCE VALUE (pF)	AVAILABLE TOLERANCE	Q FACTOR (typ. @ 1GHz)*	ESR Ω (typ. @ 1GHz)*
NMC-Q0805NPO0R2_100TRPF	0.2	B	400	0.90
NMC-Q0805NPO0R3_100TRPF	0.3	B	400	0.90
NMC-Q0805NPO0R4_100TRPF	0.4	A, B	400	0.90
NMC-Q0805NPO0R5_100TRPF	0.5	A, B, C	400	0.80
NMC-Q0805NPO0R6_100TRPF	0.6	A, B, C	400	0.70
NMC-Q0805NPO0R7_100TRPF	0.7	A, B, C	400	0.50
NMC-Q0805NPO0R8_100TRPF	0.8	A, B, C	400	0.50
NMC-Q0805NPO0R9_100TRPF	0.9	A, B, C	400	0.40
NMC-Q0805NPO1R0_100TRPF	1.0	A, B, C	400	0.30
NMC-Q0805NPO1R2_100TRPF	1.2	A, B, C	400	0.20
NMC-Q0805NPO1R5_100TRPF	1.5	A, B, C	400	0.20
NMC-Q0805NPO1R6_100TRPF	1.6	A, B, C	400	0.20
NMC-Q0805NPO1R8_100TRPF	1.8	A, B, C	400	0.20
NMC-Q0805NPO2R0_100TRPF	2.0	A, B, C	400	0.20
NMC-Q0805NPO2R2_100TRPF	2.2	A, B, C	400	0.20
NMC-Q0805NPO2R7_100TRPF	2.7	A, B, C	400	0.15
NMC-Q0805NPO3R3_100TRPF	3.3	A, B, C	350	0.15
NMC-Q0805NPO3R9_100TRPF	3.9	A, B, C	350	0.10
NMC-Q0805NPO4R3_100TRPF	4.3	A, B, C	300	0.10
NMC-Q0805NPO4R7_100TRPF	4.7	A, B, C	300	0.10
NMC-Q0805NPO5R6_100TRPF	5.6	B, C, D	300	0.10
NMC-Q0805NPO6R8_100TRPF	6.8	B, C, D	250	0.10
NMC-Q0805NPO8R2_100TRPF	8.2	B, C, D	200	0.10
NMC-Q0805NPO100_100TRPF	10	F, G, J	150	0.10
NMC-Q0805NPO120_100TRPF	12	F, G, J	100	0.10
NMC-Q0805NPO150_100TRPF	15	F, G, J	100	0.10
NMC-Q0805NPO180_100TRPF	18	F, G, J	100	0.10
NMC-Q0805NPO220_100TRPF	22	F, G, J	100	0.10
NMC-Q0805NPO270_100TRPF	27	F, G, J	75	0.10
NMC-Q0805NPO330_100TRPF	33	F, G, J	60	0.10
NMC-Q0805NPO390_100TRPF	39	F, G, J	40	0.10
NMC-Q0805NPO430_100TRPF	43	F, G, J	25	0.10
NMC-Q0805NPO470_100TRPF	47	F, G, J	25	0.10
NMC-Q0805NPO560_100TRPF	56	F, G, J	10	0.10
NMC-Q0805NPO680_100TRPF	68	F, G, J	3	0.10
NMC-Q0805NPO820_100TRPF	82	F, G, J	3	0.10
NMC-Q0805NPO101_100TRPF	100	F, G, J	3	0.10

*Typical Q & ESR

0805 250 Volt Standard Values and Characteristics

NIC PART NUMBER	CAPACITANCE VALUE (pF)	AVAILABLE TOLERANCE	Q FACTOR (typ. @ 1GHz)*	ESR Ω (typ. @ 1GHz)*
NMC-Q0805NPO0R2_250TRPF	0.2	B	400	0.90
NMC-Q0805NPO0R3_250TRPF	0.3	B	400	0.90
NMC-Q0805NPO0R4_250TRPF	0.4	A, B	400	0.90
NMC-Q0805NPO0R5_250TRPF	0.5	A, B, C	400	0.80
NMC-Q0805NPO0R6_250TRPF	0.6	A, B, C	400	0.70
NMC-Q0805NPO0R7_250TRPF	0.7	A, B, C	400	0.50
NMC-Q0805NPO0R8_250TRPF	0.8	A, B, C	400	0.50
NMC-Q0805NPO0R9_250TRPF	0.9	A, B, C	400	0.40
NMC-Q0805NPO1R0_250TRPF	1.0	A, B, C	400	0.30
NMC-Q0805NPO1R2_250TRPF	1.2	A, B, C	400	0.20
NMC-Q0805NPO1R5_250TRPF	1.5	A, B, C	400	0.20
NMC-Q0805NPO1R6_250TRPF	1.6	A, B, C	400	0.20
NMC-Q0805NPO1R8_250TRPF	1.8	A, B, C	400	0.20
NMC-Q0805NPO2R0_250TRPF	2.0	A, B, C	400	0.20
NMC-Q0805NPO2R2_250TRPF	2.2	A, B, C	400	0.20
NMC-Q0805NPO2R7_250TRPF	2.7	A, B, C	400	0.15
NMC-Q0805NPO3R3_250TRPF	3.3	A, B, C	350	0.15
NMC-Q0805NPO3R9_250TRPF	3.9	A, B, C	350	0.10
NMC-Q0805NPO4R3_250TRPF	4.3	A, B, C	300	0.10
NMC-Q0805NPO4R7_250TRPF	4.7	A, B, C	300	0.10
NMC-Q0805NPO5R6_250TRPF	5.6	B, C, D	300	0.10
NMC-Q0805NPO6R8_250TRPF	6.8	B, C, D	250	0.10
NMC-Q0805NPO8R2_250TRPF	8.2	B, C, D	200	0.10
NMC-Q0805NPO100_250TRPF	10	F, G, J	150	0.10
NMC-Q0805NPO120_250TRPF	12	F, G, J	100	0.10
NMC-Q0805NPO150_250TRPF	15	F, G, J	100	0.10
NMC-Q0805NPO180_250TRPF	18	F, G, J	100	0.10
NMC-Q0805NPO220_250TRPF	22	F, G, J	100	0.10
NMC-Q0805NPO270_250TRPF	27	F, G, J	75	0.10
NMC-Q0805NPO330_250TRPF	33	F, G, J	60	0.10
NMC-Q0805NPO390_250TRPF	39	F, G, J	40	0.10
NMC-Q0805NPO430_250TRPF	43	F, G, J	25	0.10
NMC-Q0805NPO470_250TRPF	47	F, G, J	25	0.10
NMC-Q0805NPO560_250TRPF	56	F, G, J	10	0.10
NMC-Q0805NPO680_250TRPF	68	F, G, J	3	0.10
NMC-Q0805NPO820_250TRPF	82	F, G, J	3	0.10
NMC-Q0805NPO101_250TRPF	100	F, G, J	3	0.10

*Typical Q & ESR

0805 500 Volt Standard Values and Characteristics

NIC PART NUMBER	CAPACITANCE VALUE (pF)	AVAILABLE TOLERANCE	Q FACTOR (typ. @ 1GHz)*	ESR Ω (typ. @ 1GHz)*
NMC-Q0805NPO0R2_500TRPF	0.2	B	400	0.90
NMC-Q0805NPO0R3_500TRPF	0.3	B	400	0.90
NMC-Q0805NPO0R4_500TRPF	0.4	A, B	400	0.90
NMC-Q0805NPO0R5_500TRPF	0.5	A, B, C	400	0.80
NMC-Q0805NPO0R6_500TRPF	0.6	A, B, C	400	0.70
NMC-Q0805NPO0R7_500TRPF	0.7	A, B, C	400	0.50
NMC-Q0805NPO0R8_500TRPF	0.8	A, B, C	400	0.50
NMC-Q0805NPO0R9_500TRPF	0.9	A, B, C	400	0.40
NMC-Q0805NPO1R0_500TRPF	1.0	A, B, C	400	0.30
NMC-Q0805NPO1R2_500TRPF	1.2	A, B, C	400	0.20
NMC-Q0805NPO1R5_500TRPF	1.5	A, B, C	400	0.20
NMC-Q0805NPO1R6_500TRPF	1.6	A, B, C	400	0.20
NMC-Q0805NPO1R8_500TRPF	1.8	A, B, C	400	0.20
NMC-Q0805NPO2R0_500TRPF	2.0	A, B, C	400	0.20
NMC-Q0805NPO2R2_500TRPF	2.2	A, B, C	400	0.20
NMC-Q0805NPO2R7_500TRPF	2.7	A, B, C	400	0.15
NMC-Q0805NPO3R3_500TRPF	3.3	A, B, C	350	0.15
NMC-Q0805NPO3R9_500TRPF	3.9	A, B, C	350	0.10
NMC-Q0805NPO4R3_500TRPF	4.3	A, B, C	300	0.10
NMC-Q0805NPO4R7_500TRPF	4.7	A, B, C	300	0.10
NMC-Q0805NPO5R6_500TRPF	5.6	B, C, D	300	0.10
NMC-Q0805NPO6R8_500TRPF	6.8	B, C, D	250	0.10
NMC-Q0805NPO8R2_500TRPF	8.2	B, C, D	200	0.10
NMC-Q0805NPO100_500TRPF	10	F, G, J	150	0.10
NMC-Q0805NPO120_500TRPF	12	F, G, J	100	0.10
NMC-Q0805NPO150_500TRPF	15	F, G, J	100	0.10
NMC-Q0805NPO180_500TRPF	18	F, G, J	100	0.10
NMC-Q0805NPO220_500TRPF	22	F, G, J	100	0.10
NMC-Q0805NPO270_500TRPF	27	F, G, J	75	0.10
NMC-Q0805NPO330_500TRPF	33	F, G, J	60	0.10
NMC-Q0805NPO390_500TRPF	39	F, G, J	40	0.10
NMC-Q0805NPO430_500TRPF	43	F, G, J	25	0.10
NMC-Q0805NPO470_500TRPF	47	F, G, J	25	0.10
NMC-Q0805NPO560_500TRPF	56	F, G, J	10	0.10
NMC-Q0805NPO680_500TRPF	68	F, G, J	3	0.10

*Typical Q & ESR

1111 50 Volt Standard Values and Characteristics (Typical Q and ESR)

NIC PART NUMBER	CAPACITANCE VALUE (pF)	AVAILABLE TOLERANCE	Q FACTOR (typ. @ 1GHz)*	ESR Ω (typ. @ 1GHz)*
NMC-Q1111NPO2R0_50TRPLPF	2.0	A,B,C	365	0.25
NMC-Q1111NPO2R2_50TRPLPF	2.2	A,B,C	365	0.25
NMC-Q1111NPO2R4_50TRPLPF	2.4	A,B,C	350	0.25
NMC-Q1111NPO2R7_50TRPLPF	2.7	A,B,C	300	0.25
NMC-Q1111NPO3R0_50TRPLPF	3.0	A,B,C	250	0.25
NMC-Q1111NPO3R3_50TRPLPF	3.3	A,B,C	205	0.25
NMC-Q1111NPO3R6_50TRPLPF	3.6	A,B,C	200	0.25
NMC-Q1111NPO3R9_50TRPLPF	3.9	A,B,C	200	0.25
NMC-Q1111NPO4R0_50TRPLPF	4.0	A,B,C	200	0.25
NMC-Q1111NPO4R3_50TRPLPF	4.3	A,B,C	200	0.25
NMC-Q1111NPO4R7_50TRPLPF	4.7	A,B,C	200	0.20
NMC-Q1111NPO5R0_50TRPLPF	5.0	A,B,C	200	0.15
NMC-Q1111NPO5R1_50TRPLPF	5.1	B,C,D	200	0.15
NMC-Q1111NPO5R6_50TRPLPF	5.6	B,C,D	200	0.15
NMC-Q1111NPO6R0_50TRPLPF	6.0	B,C,D	200	0.15
NMC-Q1111NPO6R2_50TRPLPF	6.2	B,C,D	200	0.15
NMC-Q1111NPO6R7_50TRPLPF	6.7	B,C,D	200	0.15
NMC-Q1111NPO6R8_50TRPLPF	6.8	B,C,D	200	0.15
NMC-Q1111NPO7R0_50TRPLPF	7.0	B,C,D	200	0.15
NMC-Q1111NPO7R5_50TRPLPF	7.5	B,C,D	200	0.15
NMC-Q1111NPO8R0_50TRPLPF	8.0	B,C,D	200	0.15
NMC-Q1111NPO8R2_50TRPLPF	8.2	B,C,D	200	0.15
NMC-Q1111NPO9R0_50TRPLPF	9.0	B,C,D	150	0.15
NMC-Q1111NPO9R1_50TRPLPF	9.1	B,C,D	150	0.15
NMC-Q1111NPO100_50TRPLPF	10	F,G,J	125	0.15
NMC-Q1111NPO110_50TRPLPF	11	F,G,J	100	0.15
NMC-Q1111NPO120_50TRPLPF	12	F,G,J	100	0.15
NMC-Q1111NPO130_50TRPLPF	13	F,G,J	100	0.15
NMC-Q1111NPO150_50TRPLPF	15	F,G,J	80	0.15
NMC-Q1111NPO160_50TRPLPF	16	F,G,J	80	0.15
NMC-Q1111NPO180_50TRPLPF	18	F,G,J	80	0.15
NMC-Q1111NPO200_50TRPLPF	20	F,G,J	80	0.15
NMC-Q1111NPO220_50TRPLPF	22	F,G,J	80	0.15
NMC-Q1111NPO240_50TRPLPF	24	F,G,J	80	0.15
NMC-Q1111NPO270_50TRPLPF	27	F,G,J	75	0.15
NMC-Q1111NPO300_50TRPLPF	30	F,G,J	65	0.15
NMC-Q1111NPO330_50TRPLPF	33	F,G,J	60	0.15
NMC-Q1111NPO360_50TRPLPF	36	F,G,J	50	0.15
NMC-Q1111NPO390_50TRPLPF	39	F,G,J	40	0.15
NMC-Q1111NPO430_50TRPLPF	43	F,G,J	25	0.15
NMC-Q1111NPO470_50TRPLPF	47	F,G,J	25	0.15
NMC-Q1111NPO510_50TRPLPF	51	F,G,J	10	0.15
NMC-Q1111NPO560_50TRPLPF	56	F,G,J	10	0.15
NMC-Q1111NPO620_50TRPLPF	62	F,G,J	10	0.15
NMC-Q1111NPO680_50TRPLPF	68	F,G,J	10	0.15
NMC-Q1111NPO750_50TRPLPF	75	F,G,J	5	0.05
NMC-Q1111NPO820_50TRPLPF	82	F,G,J	5	0.05
NMC-Q1111NPO910_50TRPLPF	91	F,G,J	5	0.05
NMC-Q1111NPO101_50TRPLPF	100	F,G,J	30 at 700MHz	0.10 at 700MHz
NMC-Q1111NPO121_50TRPLPF	120	F,G,J	20 at 700MHz	0.10 at 700MHz
NMC-Q1111NPO151_50TRPLPF	150	F,G,J	10 at 700MHz	0.10 at 700MHz
NMC-Q1111NPO181_50TRPLPF	180	F,G,J	10 at 700MHz	0.10 at 700MHz
NMC-Q1111NPO221_50TRPLPF	220	F,G,J	30 at 500MHz	0.10 at 500MHz
NMC-Q1111NPO271_50TRPLPF	270	F,G,J	20 at 500MHz	0.10 at 500MHz
NMC-Q1111NPO331_50TRPLPF	330	F,G,J	10 at 500MHz	0.10 at 500MHz
NMC-Q1111NPO391_50TRPLPF	390	F,G,J	10 at 500MHz	0.10 at 500MHz
NMC-Q1111NPO471_50TRPLPF	470	F,G,J	4 at 300MHz	0.20 at 300MHz
NMC-Q1111NPO561_50TRPLPF	560	F,G,J	3 at 300MHz	0.20 at 300MHz
NMC-Q1111NPO681_50TRPLPF	680	F,G,J	3 at 300MHz	0.20 at 300MHz
NMC-Q1111NPO821_50TRPLPF	820	F,G,J	3 at 300MHz	0.20 at 300MHz
NMC-Q1111NPO102_50TRPLPF	1000	F,G,J	3 at 300MHz	0.15 at 300MHz

1111 100 Volt Standard Values and Characteristics (Typical Q and ESR)

NIC PART NUMBER	CAPACITANCE VALUE (pF)	AVAILABLE TOLERANCE	Q FACTOR (typ. @ 1GHz)*	ESR Ω (typ. @ 1GHz)*
NMC-Q1111NPO2R0_100TRPLPF	2.0	A,B,C	365	0.25
NMC-Q1111NPO2R2_100TRPLPF	2.2	A,B,C	365	0.25
NMC-Q1111NPO2R4_100TRPLPF	2.4	A,B,C	350	0.25
NMC-Q1111NPO2R7_100TRPLPF	2.7	A,B,C	300	0.25
NMC-Q1111NPO3R0_100TRPLPF	3.0	A,B,C	250	0.25
NMC-Q1111NPO3R3_100TRPLPF	3.3	A,B,C	205	0.25
NMC-Q1111NPO3R6_100TRPLPF	3.6	A,B,C	200	0.25
NMC-Q1111NPO3R9_100TRPLPF	3.9	A,B,C	200	0.25
NMC-Q1111NPO4R0_100TRPLPF	4.0	A,B,C	200	0.25
NMC-Q1111NPO4R3_100TRPLPF	4.3	A,B,C	200	0.25
NMC-Q1111NPO4R7_100TRPLPF	4.7	A,B,C	200	0.20
NMC-Q1111NPO5R0_100TRPLPF	5.0	A,B,C	200	0.15
NMC-Q1111NPO5R1_100TRPLPF	5.1	B,C,D	200	0.15
NMC-Q1111NPO5R6_100TRPLPF	5.6	B,C,D	200	0.15
NMC-Q1111NPO6R0_100TRPLPF	6.0	B,C,D	200	0.15
NMC-Q1111NPO6R2_100TRPLPF	6.2	B,C,D	200	0.15
NMC-Q1111NPO6R7_100TRPLPF	6.7	B,C,D	200	0.15
NMC-Q1111NPO6R8_100TRPLPF	6.8	B,C,D	200	0.15
NMC-Q1111NPO7R0_100TRPLPF	7.0	B,C,D	200	0.15
NMC-Q1111NPO7R5_100TRPLPF	7.5	B,C,D	200	0.15
NMC-Q1111NPO8R0_100TRPLPF	8.0	B,C,D	200	0.15
NMC-Q1111NPO8R2_100TRPLPF	8.2	B,C,D	200	0.15
NMC-Q1111NPO9R0_100TRPLPF	9.0	B,C,D	150	0.15
NMC-Q1111NPO9R1_100TRPLPF	9.1	B,C,D	150	0.15
NMC-Q1111NPO100_100TRPLPF	10	F,G,J	125	0.15
NMC-Q1111NPO110_100TRPLPF	11	F,G,J	100	0.15
NMC-Q1111NPO120_100TRPLPF	12	F,G,J	100	0.15
NMC-Q1111NPO130_100TRPLPF	13	F,G,J	100	0.15
NMC-Q1111NPO150_100TRPLPF	15	F,G,J	80	0.15
NMC-Q1111NPO160_100TRPLPF	16	F,G,J	80	0.15
NMC-Q1111NPO180_100TRPLPF	18	F,G,J	80	0.15
NMC-Q1111NPO200_100TRPLPF	20	F,G,J	80	0.15
NMC-Q1111NPO220_100TRPLPF	22	F,G,J	80	0.15
NMC-Q1111NPO240_100TRPLPF	24	F,G,J	80	0.15
NMC-Q1111NPO270_100TRPLPF	27	F,G,J	75	0.15
NMC-Q1111NPO300_100TRPLPF	30	F,G,J	65	0.15
NMC-Q1111NPO330_100TRPLPF	33	F,G,J	60	0.15
NMC-Q1111NPO360_100TRPLPF	36	F,G,J	50	0.15
NMC-Q1111NPO390_100TRPLPF	39	F,G,J	40	0.15
NMC-Q1111NPO430_100TRPLPF	43	F,G,J	25	0.15
NMC-Q1111NPO470_100TRPLPF	47	F,G,J	25	0.15
NMC-Q1111NPO510_100TRPLPF	51	F,G,J	10	0.15
NMC-Q1111NPO560_100TRPLPF	56	F,G,J	10	0.15
NMC-Q1111NPO620_100TRPLPF	62	F,G,J	10	0.15
NMC-Q1111NPO680_100TRPLPF	68	F,G,J	10	0.15
NMC-Q1111NPO750_100TRPLPF	75	F,G,J	5	0.05
NMC-Q1111NPO820_100TRPLPF	82	F,G,J	5	0.05
NMC-Q1111NPO910_100TRPLPF	91	F,G,J	5	0.05
NMC-Q1111NPO101_100TRPLPF	100	F,G,J	30 at 700MHz	0.10 at 700MHz
NMC-Q1111NPO121_100TRPLPF	120	F,G,J	20 at 700MHz	0.10 at 700MHz
NMC-Q1111NPO151_100TRPLPF	150	F,G,J	10 at 700MHz	0.10 at 700MHz
NMC-Q1111NPO181_100TRPLPF	180	F,G,J	10 at 700MHz	0.10 at 700MHz
NMC-Q1111NPO221_100TRPLPF	220	F,G,J	30 at 500MHz	0.10 at 500MHz
NMC-Q1111NPO271_100TRPLPF	270	F,G,J	20 at 500MHz	0.10 at 500MHz
NMC-Q1111NPO331_100TRPLPF	330	F,G,J	10 at 500MHz	0.10 at 500MHz
NMC-Q1111NPO391_100TRPLPF	390	F,G,J	10 at 500MHz	0.10 at 500MHz
NMC-Q1111NPO471_100TRPLPF	470	F,G,J	4 at 300MHz	0.20 at 300MHz
NMC-Q1111NPO561_100TRPLPF	560	F,G,J	3 at 300MHz	0.20 at 300MHz
NMC-Q1111NPO681_100TRPLPF	680	F,G,J	3 at 300MHz	0.20 at 300MHz
NMC-Q1111NPO821_100TRPLPF	820	F,G,J	3 at 300MHz	0.20 at 300MHz
NMC-Q1111NPO102_100TRPLPF	1000	F,G,J	3 at 300MHz	0.15 at 300MHz

1111 200 Volt Standard Values and Characteristics (Typical Q and ESR)

NIC PART NUMBER	CAPACITANCE VALUE (pF)	AVAILABLE TOLERANCE	Q FACTOR (typ. @ 1GHz)*	ESR Ω (typ. @ 1GHz)*
NMC-Q1111NPO2R0_200TRPLPF	2.0	A,B,C	365	0.25
NMC-Q1111NPO2R2_200TRPLPF	2.2	A,B,C	365	0.25
NMC-Q1111NPO2R4_200TRPLPF	2.4	A,B,C	350	0.25
NMC-Q1111NPO2R7_200TRPLPF	2.7	A,B,C	300	0.25
NMC-Q1111NPO3R0_200TRPLPF	3.0	A,B,C	250	0.25
NMC-Q1111NPO3R3_200TRPLPF	3.3	A,B,C	205	0.25
NMC-Q1111NPO3R6_200TRPLPF	3.6	A,B,C	200	0.25
NMC-Q1111NPO3R9_200TRPLPF	3.9	A,B,C	200	0.25
NMC-Q1111NPO4R0_200TRPLPF	4.0	A,B,C	200	0.25
NMC-Q1111NPO4R3_200TRPLPF	4.3	A,B,C	200	0.25
NMC-Q1111NPO4R7_200TRPLPF	4.7	A,B,C	200	0.20
NMC-Q1111NPO5R0_200TRPLPF	5.0	A,B,C	200	0.15
NMC-Q1111NPO5R1_200TRPLPF	5.1	B,C,D	200	0.15
NMC-Q1111NPO5R6_200TRPLPF	5.6	B,C,D	200	0.15
NMC-Q1111NPO6R0_200TRPLPF	6.0	B,C,D	200	0.15
NMC-Q1111NPO6R2_200TRPLPF	6.2	B,C,D	200	0.15
NMC-Q1111NPO6R7_200TRPLPF	6.7	B,C,D	200	0.15
NMC-Q1111NPO6R8_200TRPLPF	6.8	B,C,D	200	0.15
NMC-Q1111NPO7R0_200TRPLPF	7.0	B,C,D	200	0.15
NMC-Q1111NPO7R5_200TRPLPF	7.5	B,C,D	200	0.15
NMC-Q1111NPO8R0_200TRPLPF	8.0	B,C,D	200	0.15
NMC-Q1111NPO8R2_200TRPLPF	8.2	B,C,D	200	0.15
NMC-Q1111NPO9R0_200TRPLPF	9.0	B,C,D	150	0.15
NMC-Q1111NPO9R1_200TRPLPF	9.1	B,C,D	150	0.15
NMC-Q1111NPO100_200TRPLPF	10	F,G,J	125	0.15
NMC-Q1111NPO110_200TRPLPF	11	F,G,J	100	0.15
NMC-Q1111NPO120_200TRPLPF	12	F,G,J	100	0.15
NMC-Q1111NPO130_200TRPLPF	13	F,G,J	100	0.15
NMC-Q1111NPO150_200TRPLPF	15	F,G,J	80	0.15
NMC-Q1111NPO160_200TRPLPF	16	F,G,J	80	0.15
NMC-Q1111NPO180_200TRPLPF	18	F,G,J	80	0.15
NMC-Q1111NPO200_200TRPLPF	20	F,G,J	80	0.15
NMC-Q1111NPO220_200TRPLPF	22	F,G,J	80	0.15
NMC-Q1111NPO240_200TRPLPF	24	F,G,J	80	0.15
NMC-Q1111NPO270_200TRPLPF	27	F,G,J	75	0.15
NMC-Q1111NPO300_200TRPLPF	30	F,G,J	65	0.15
NMC-Q1111NPO330_200TRPLPF	33	F,G,J	60	0.15
NMC-Q1111NPO360_200TRPLPF	36	F,G,J	50	0.15
NMC-Q1111NPO390_200TRPLPF	39	F,G,J	40	0.15
NMC-Q1111NPO430_200TRPLPF	43	F,G,J	25	0.15
NMC-Q1111NPO470_200TRPLPF	47	F,G,J	25	0.15
NMC-Q1111NPO510_200TRPLPF	51	F,G,J	10	0.15
NMC-Q1111NPO560_200TRPLPF	56	F,G,J	10	0.15
NMC-Q1111NPO620_200TRPLPF	62	F,G,J	10	0.15
NMC-Q1111NPO680_200TRPLPF	68	F,G,J	10	0.15
NMC-Q1111NPO750_200TRPLPF	75	F,G,J	5	0.05
NMC-Q1111NPO820_200TRPLPF	82	F,G,J	5	0.05
NMC-Q1111NPO910_200TRPLPF	91	F,G,J	5	0.05
NMC-Q1111NPO101_200TRPLPF	100	F,G,J	30 at 700MHz	0.10 at 700MHz
NMC-Q1111NPO121_200TRPLPF	120	F,G,J	20 at 700MHz	0.10 at 700MHz
NMC-Q1111NPO151_200TRPLPF	150	F,G,J	10 at 700MHz	0.10 at 700MHz
NMC-Q1111NPO181_200TRPLPF	180	F,G,J	10 at 700MHz	0.10 at 700MHz
NMC-Q1111NPO221_200TRPLPF	220	F,G,J	30 at 500MHz	0.10 at 500MHz
NMC-Q1111NPO271_200TRPLPF	270	F,G,J	20 at 500MHz	0.10 at 500MHz
NMC-Q1111NPO331_200TRPLPF	330	F,G,J	10 at 500MHz	0.10 at 500MHz
NMC-Q1111NPO391_200TRPLPF	390	F,G,J	10 at 500MHz	0.10 at 500MHz
NMC-Q1111NPO471_200TRPLPF	470	F,G,J	4 at 300MHz	0.20 at 300MHz
NMC-Q1111NPO561_200TRPLPF	560	F,G,J	3 at 300MHz	0.20 at 300MHz
NMC-Q1111NPO681_200TRPLPF	680	F,G,J	3 at 300MHz	0.20 at 300MHz
NMC-Q1111NPO821_200TRPLPF	820	F,G,J	3 at 300MHz	0.20 at 300MHz
NMC-Q1111NPO102_200TRPLPF	1000	F,G,J	3 at 300MHz	0.15 at 300MHz

1111 250 Volt Standard Values and Characteristics (Typical Q and ESR)

NIC PART NUMBER	CAPACITANCE VALUE (pF)	AVAILABLE TOLERANCE	Q FACTOR (typ. @ 1GHz)*	ESR Ω (typ. @ 1GHz)*
NMC-Q1111NPO2R0_250TRPLPF	2.0	A,B,C	365	0.25
NMC-Q1111NPO2R2_250TRPLPF	2.2	A,B,C	365	0.25
NMC-Q1111NPO2R4_250TRPLPF	2.4	A,B,C	350	0.25
NMC-Q1111NPO2R7_250TRPLPF	2.7	A,B,C	300	0.25
NMC-Q1111NPO3R0_250TRPLPF	3.0	A,B,C	250	0.25
NMC-Q1111NPO3R3_250TRPLPF	3.3	A,B,C	205	0.25
NMC-Q1111NPO3R6_250TRPLPF	3.6	A,B,C	200	0.25
NMC-Q1111NPO3R9_250TRPLPF	3.9	A,B,C	200	0.25
NMC-Q1111NPO4R0_250TRPLPF	4.0	A,B,C	200	0.25
NMC-Q1111NPO4R3_250TRPLPF	4.3	A,B,C	200	0.25
NMC-Q1111NPO4R7_250TRPLPF	4.7	A,B,C	200	0.20
NMC-Q1111NPO5R0_250TRPLPF	5.0	A,B,C	200	0.15
NMC-Q1111NPO5R1_250TRPLPF	5.1	B,C,D	200	0.15
NMC-Q1111NPO5R6_250TRPLPF	5.6	B,C,D	200	0.15
NMC-Q1111NPO6R0_250TRPLPF	6.0	B,C,D	200	0.15
NMC-Q1111NPO6R2_250TRPLPF	6.2	B,C,D	200	0.15
NMC-Q1111NPO6R7_250TRPLPF	6.7	B,C,D	200	0.15
NMC-Q1111NPO6R8_250TRPLPF	6.8	B,C,D	200	0.15
NMC-Q1111NPO7R0_250TRPLPF	7.0	B,C,D	200	0.15
NMC-Q1111NPO7R5_250TRPLPF	7.5	B,C,D	200	0.15
NMC-Q1111NPO8R0_250TRPLPF	8.0	B,C,D	200	0.15
NMC-Q1111NPO8R2_250TRPLPF	8.2	B,C,D	200	0.15
NMC-Q1111NPO9R0_250TRPLPF	9.0	B,C,D	150	0.15
NMC-Q1111NPO9R1_250TRPLPF	9.1	B,C,D	150	0.15
NMC-Q1111NPO100_250TRPLPF	10	F,G,J	125	0.15
NMC-Q1111NPO110_250TRPLPF	11	F,G,J	100	0.15
NMC-Q1111NPO120_250TRPLPF	12	F,G,J	100	0.15
NMC-Q1111NPO130_250TRPLPF	13	F,G,J	100	0.15
NMC-Q1111NPO150_250TRPLPF	15	F,G,J	80	0.15
NMC-Q1111NPO160_250TRPLPF	16	F,G,J	80	0.15
NMC-Q1111NPO180_250TRPLPF	18	F,G,J	80	0.15
NMC-Q1111NPO200_250TRPLPF	20	F,G,J	80	0.15
NMC-Q1111NPO220_250TRPLPF	22	F,G,J	80	0.15
NMC-Q1111NPO240_250TRPLPF	24	F,G,J	80	0.15
NMC-Q1111NPO270_250TRPLPF	27	F,G,J	75	0.15
NMC-Q1111NPO300_250TRPLPF	30	F,G,J	65	0.15
NMC-Q1111NPO330_250TRPLPF	33	F,G,J	60	0.15
NMC-Q1111NPO360_250TRPLPF	36	F,G,J	50	0.15
NMC-Q1111NPO390_250TRPLPF	39	F,G,J	40	0.15
NMC-Q1111NPO430_250TRPLPF	43	F,G,J	25	0.15
NMC-Q1111NPO470_250TRPLPF	47	F,G,J	25	0.15
NMC-Q1111NPO510_250TRPLPF	51	F,G,J	10	0.15
NMC-Q1111NPO560_250TRPLPF	56	F,G,J	10	0.15
NMC-Q1111NPO620_250TRPLPF	62	F,G,J	10	0.15
NMC-Q1111NPO680_250TRPLPF	68	F,G,J	10	0.15
NMC-Q1111NPO750_250TRPLPF	75	F,G,J	5	0.05
NMC-Q1111NPO820_250TRPLPF	82	F,G,J	5	0.05
NMC-Q1111NPO910_250TRPLPF	91	F,G,J	5	0.05
NMC-Q1111NPO101_250TRPLPF	100	F,G,J	30 at 700MHz	0.10 at 700MHz
NMC-Q1111NPO121_250TRPLPF	120	F,G,J	20 at 700MHz	0.10 at 700MHz
NMC-Q1111NPO151_250TRPLPF	150	F,G,J	10 at 700MHz	0.10 at 700MHz
NMC-Q1111NPO181_250TRPLPF	180	F,G,J	10 at 700MHz	0.10 at 700MHz
NMC-Q1111NPO221_250TRPLPF	220	F,G,J	30 at 500MHz	0.10 at 500MHz
NMC-Q1111NPO271_250TRPLPF	270	F,G,J	20 at 500MHz	0.10 at 500MHz
NMC-Q1111NPO331_250TRPLPF	330	F,G,J	10 at 500MHz	0.10 at 500MHz
NMC-Q1111NPO391_250TRPLPF	390	F,G,J	10 at 500MHz	0.10 at 500MHz
NMC-Q1111NPO471_250TRPLPF	470	F,G,J	4 at 300MHz	0.20 at 300MHz
NMC-Q1111NPO561_250TRPLPF	560	F,G,J	3 at 300MHz	0.20 at 300MHz
NMC-Q1111NPO681_250TRPLPF	680	F,G,J	3 at 300MHz	0.20 at 300MHz
NMC-Q1111NPO821_250TRPLPF	820	F,G,J	3 at 300MHz	0.20 at 300MHz
NMC-Q1111NPO102_250TRPLPF	1000	F,G,J	3 at 300MHz	0.15 at 300MHz

1111 500 Volt Standard Values and Characteristics (Typical Q and ESR)

NIC PART NUMBER	CAPACITANCE VALUE (pF)	AVAILABLE TOLERANCE	Q FACTOR (typ. @ 1GHz)*	ESR Ω (typ. @ 1GHz)*
NMC-Q1111NPO2R0_500TRPLPF	2.0	A,B,C	365	0.25
NMC-Q1111NPO2R2_500TRPLPF	2.2	A,B,C	365	0.25
NMC-Q1111NPO2R4_500TRPLPF	2.4	A,B,C	350	0.25
NMC-Q1111NPO2R7_500TRPLPF	2.7	A,B,C	300	0.25
NMC-Q1111NPO3R0_500TRPLPF	3.0	A,B,C	250	0.25
NMC-Q1111NPO3R3_500TRPLPF	3.3	A,B,C	205	0.25
NMC-Q1111NPO3R6_500TRPLPF	3.6	A,B,C	200	0.25
NMC-Q1111NPO3R9_500TRPLPF	3.9	A,B,C	200	0.25
NMC-Q1111NPO4R0_500TRPLPF	4.0	A,B,C	200	0.25
NMC-Q1111NPO4R3_500TRPLPF	4.3	A,B,C	200	0.25
NMC-Q1111NPO4R7_500TRPLPF	4.7	A,B,C	200	0.20
NMC-Q1111NPO5R0_500TRPLPF	5.0	A,B,C	200	0.15
NMC-Q1111NPO5R1_500TRPLPF	5.1	B,C,D	200	0.15
NMC-Q1111NPO5R6_500TRPLPF	5.6	B,C,D	200	0.15
NMC-Q1111NPO6R0_500TRPLPF	6.0	B,C,D	200	0.15
NMC-Q1111NPO6R2_500TRPLPF	6.2	B,C,D	200	0.15
NMC-Q1111NPO6R7_500TRPLPF	6.7	B,C,D	200	0.15
NMC-Q1111NPO6R8_500TRPLPF	6.8	B,C,D	200	0.15
NMC-Q1111NPO7R0_500TRPLPF	7.0	B,C,D	200	0.15
NMC-Q1111NPO7R5_500TRPLPF	7.5	B,C,D	200	0.15
NMC-Q1111NPO8R0_500TRPLPF	8.0	B,C,D	200	0.15
NMC-Q1111NPO8R2_500TRPLPF	8.2	B,C,D	200	0.15
NMC-Q1111NPO9R0_500TRPLPF	9.0	B,C,D	150	0.15
NMC-Q1111NPO9R1_500TRPLPF	9.1	B,C,D	150	0.15
NMC-Q1111NPO100_500TRPLPF	10	F,G,J	125	0.15
NMC-Q1111NPO110_500TRPLPF	11	F,G,J	100	0.15
NMC-Q1111NPO120_500TRPLPF	12	F,G,J	100	0.15
NMC-Q1111NPO130_500TRPLPF	13	F,G,J	100	0.15
NMC-Q1111NPO150_500TRPLPF	15	F,G,J	80	0.15
NMC-Q1111NPO160_500TRPLPF	16	F,G,J	80	0.15
NMC-Q1111NPO180_500TRPLPF	18	F,G,J	80	0.15
NMC-Q1111NPO200_500TRPLPF	20	F,G,J	80	0.15
NMC-Q1111NPO220_500TRPLPF	22	F,G,J	80	0.15
NMC-Q1111NPO240_500TRPLPF	24	F,G,J	80	0.15
NMC-Q1111NPO270_500TRPLPF	27	F,G,J	75	0.15
NMC-Q1111NPO300_500TRPLPF	30	F,G,J	65	0.15
NMC-Q1111NPO330_500TRPLPF	33	F,G,J	60	0.15
NMC-Q1111NPO360_500TRPLPF	36	F,G,J	50	0.15
NMC-Q1111NPO390_500TRPLPF	39	F,G,J	40	0.15
NMC-Q1111NPO430_500TRPLPF	43	F,G,J	25	0.15
NMC-Q1111NPO470_500TRPLPF	47	F,G,J	25	0.15
NMC-Q1111NPO510_500TRPLPF	51	F,G,J	10	0.15
NMC-Q1111NPO560_500TRPLPF	56	F,G,J	10	0.15
NMC-Q1111NPO620_500TRPLPF	62	F,G,J	10	0.15
NMC-Q1111NPO680_500TRPLPF	68	F,G,J	10	0.15
NMC-Q1111NPO750_500TRPLPF	75	F,G,J	5	0.05
NMC-Q1111NPO820_500TRPLPF	82	F,G,J	5	0.05
NMC-Q1111NPO910_500TRPLPF	91	F,G,J	5	0.05
NMC-Q1111NPO101_500TRPLPF	100	F,G,J	30 at 700MHz	0.10 at 700MHz
NMC-Q1111NPO121_500TRPLPF	120	F,G,J	20 at 700MHz	0.10 at 700MHz
NMC-Q1111NPO151_500TRPLPF	150	F,G,J	10 at 700MHz	0.10 at 700MHz
NMC-Q1111NPO181_500TRPLPF	180	F,G,J	10 at 700MHz	0.10 at 700MHz
NMC-Q1111NPO221_500TRPLPF	220	F,G,J	30 at 500MHz	0.10 at 500MHz
NMC-Q1111NPO271_500TRPLPF	270	F,G,J	20 at 500MHz	0.10 at 500MHz
NMC-Q1111NPO331_500TRPLPF	330	F,G,J	10 at 500MHz	0.10 at 500MHz
NMC-Q1111NPO391_500TRPLPF	390	F,G,J	10 at 500MHz	0.10 at 500MHz
NMC-Q1111NPO471_500TRPLPF	470	F,G,J	4 at 300MHz	0.20 at 300MHz
NMC-Q1111NPO561_500TRPLPF	560	F,G,J	3 at 300MHz	0.20 at 300MHz
NMC-Q1111NPO681_500TRPLPF	680	F,G,J	3 at 300MHz	0.20 at 300MHz
NMC-Q1111NPO821_500TRPLPF	820	F,G,J	3 at 300MHz	0.20 at 300MHz
NMC-Q1111NPO102_500TRPLPF	1000	F,G,J	3 at 300MHz	0.15 at 300MHz

Performance Curves

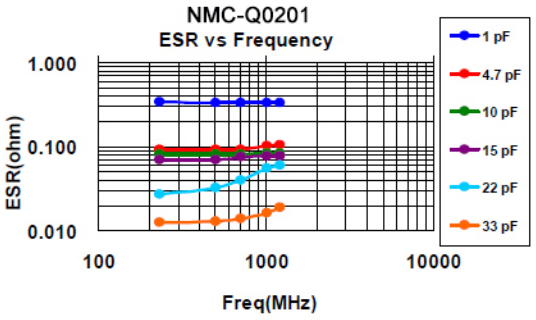

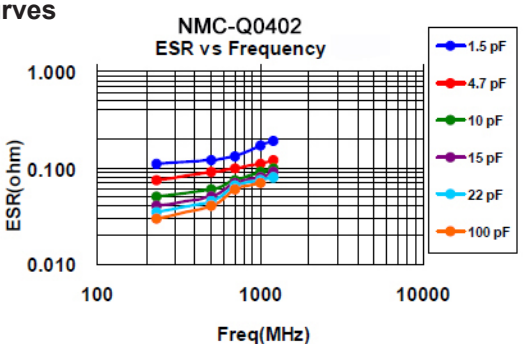

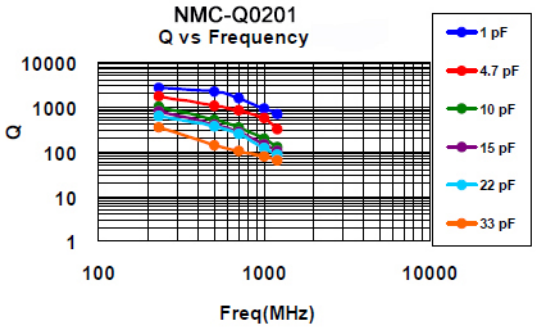

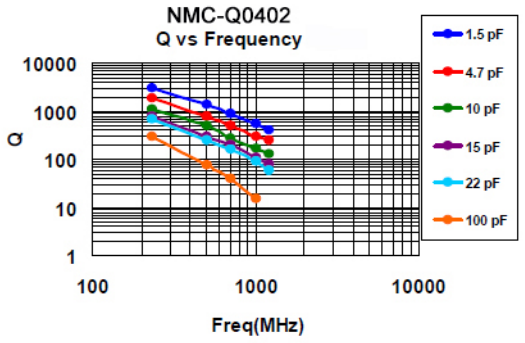

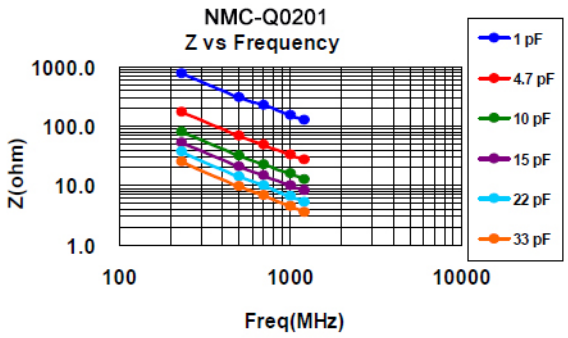

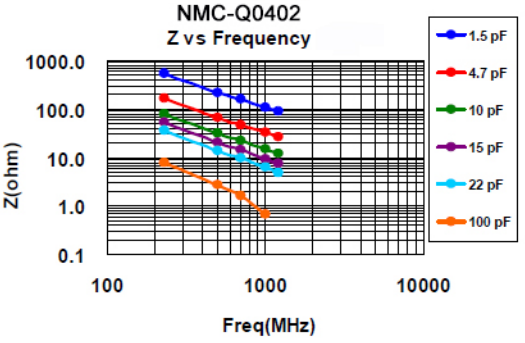

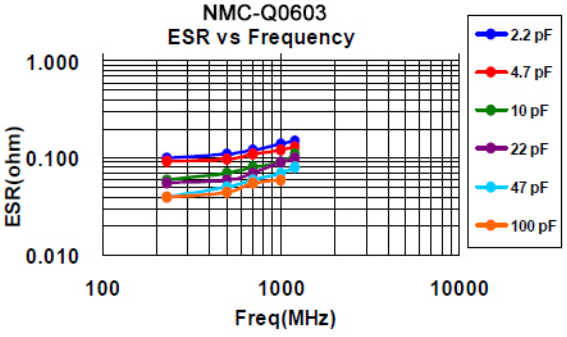

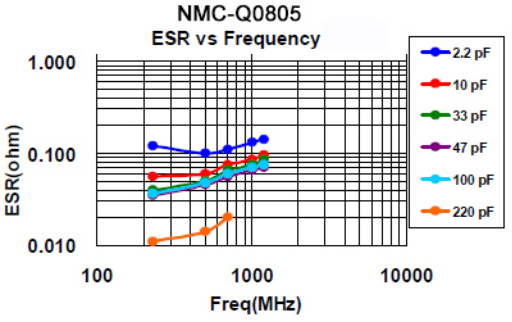

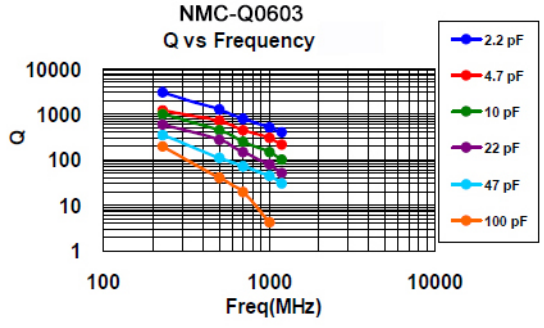

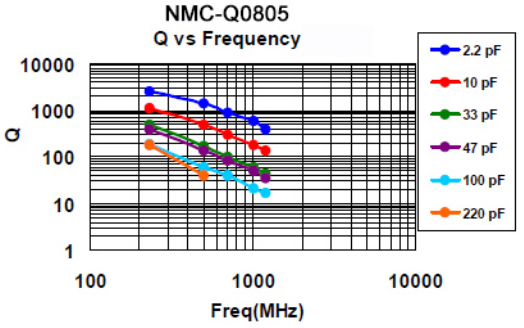

Performance Curves

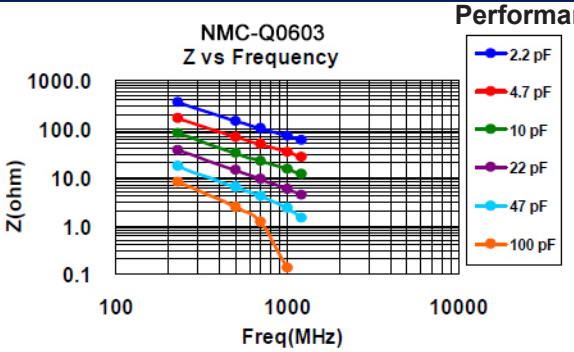

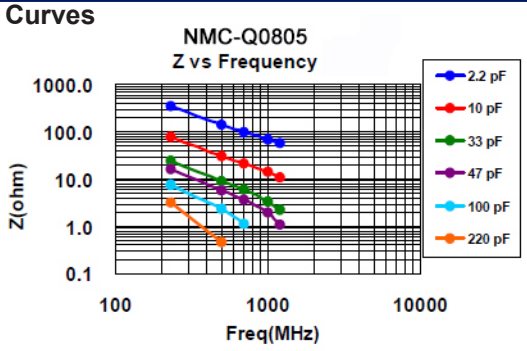

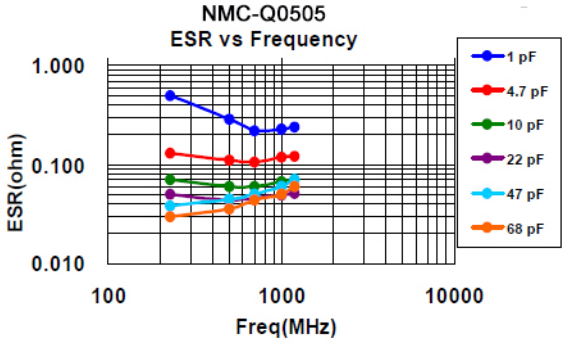

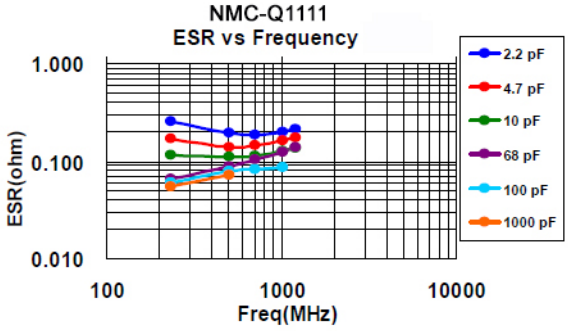

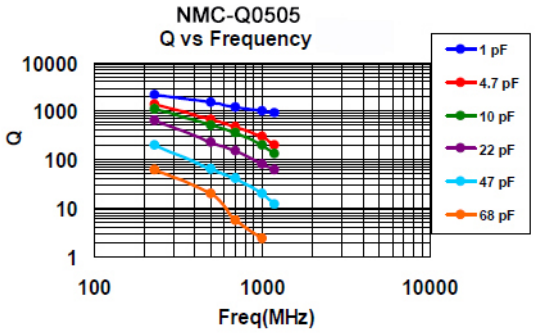

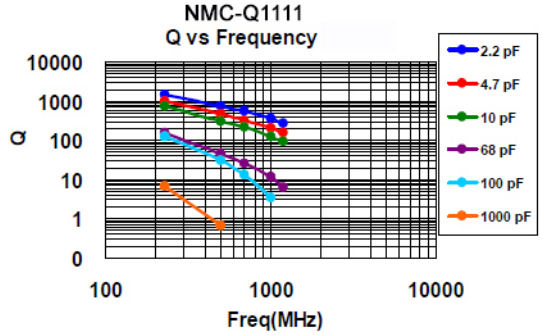

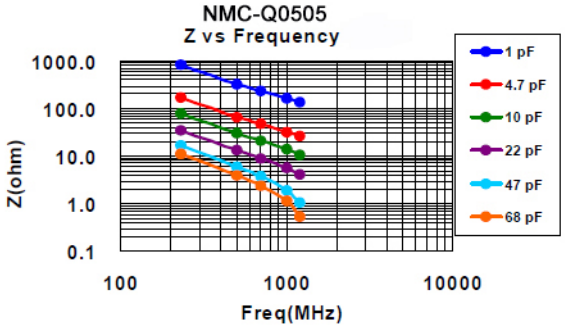

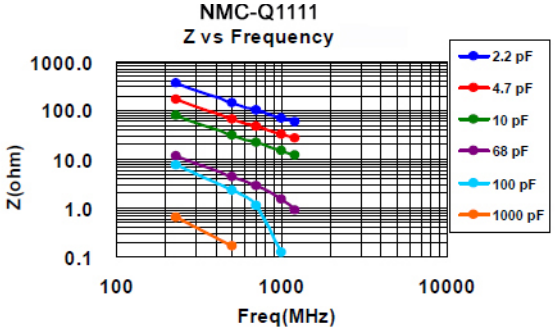

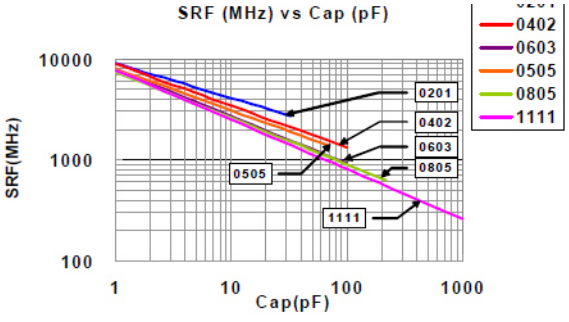

Reflow Soldering Profile

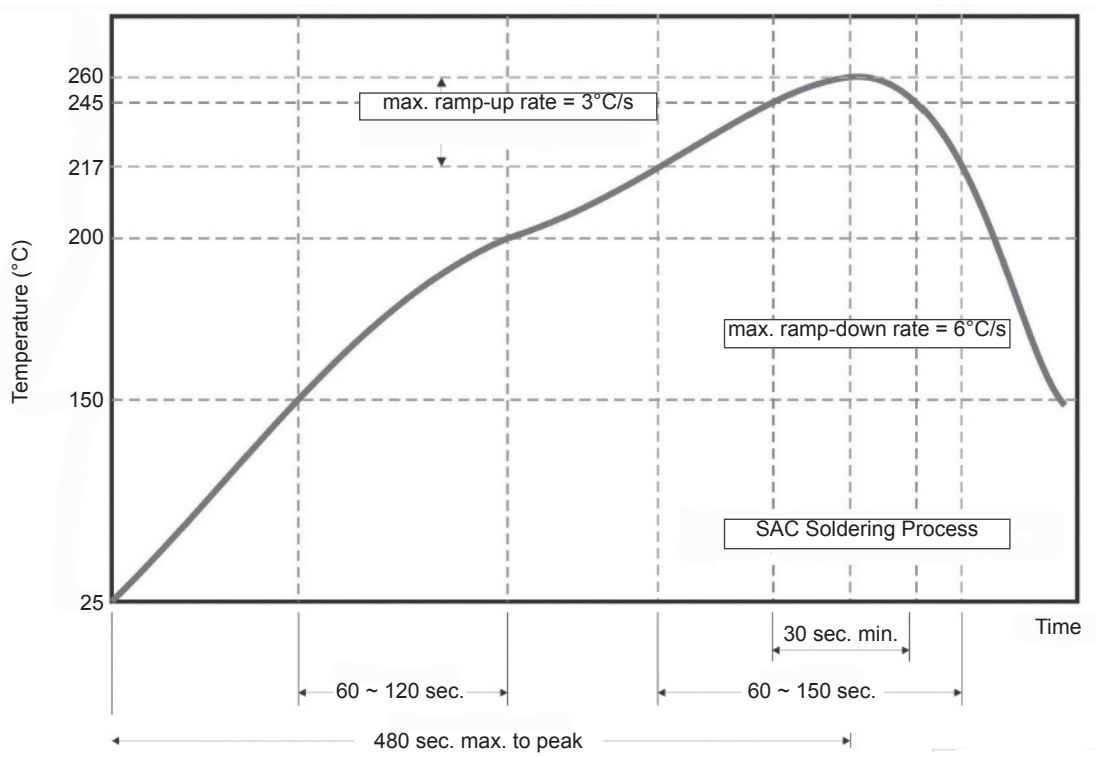

LAND PATTERN DIMENSIONS (mm)

EIA Case Size	0201	0402	0505	0603	0805	1111
A	0.65 ± 0.05	1.50 ± 0.15	3.43 ± 0.25	2.30 ± 0.25	2.80 ± 0.25	4.62 ± 0.25
B	0.23 ± 0.05	0.40 ± 0.15	0.94 ± 0.25	0.70 ± 0.25	1.00 ± 0.25	2.01 ± 0.25
C	0.21 ± 0.05	0.50 ± 0.15	1.42 ± 0.25	0.80 ± 0.25	0.90 ± 0.25	1.42 ± 0.25
D	0.30 ± 0.05	0.50 ± 0.15	2.11 ± 0.25	0.80 ± 0.25	1.30 ± 0.25	3.45 ± 0.25

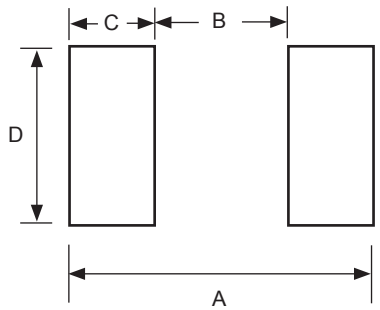

REEL

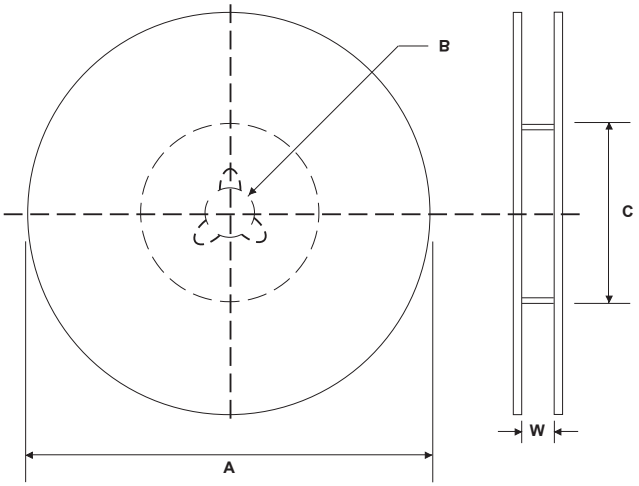

REEL DIMENSIONS (mm)

Reel Diameter (A)	B	C	W1
7” (178 ± 1.0)	13 +0.5/-0.2	60.5 ±1.0	8.4 +1.5/-0
10" (250 ± 1.0)		100 ± 1.0	
13” (330 ± 1.0)			

REEL QUANTITIES

Size	0201	0402	0505	0603	0805	1111
7”	15,000	10,000	3,000	4,000	4,000	2,000
10"	-	-	-	10,000	-	-
13”	-	50,000	-	15,000	15,000	-

PUNCHED CARRIER TAPE DIMENSIONS (mm)

Type	A_o	B_o	W	F	E	P0	P1	P2	D0	T
0201	0.37 ± 0.03	0.67 ± 0.03	8.00 ± 0.10	3.50 ± 0.05	1.75 ± 0.05	4.0 ± 0.10	2.0 ± 0.05	2.0 ± 0.05	1.55 ± 0.05	0.42 ± 0.30
0402	0.62 ± 0.05	1.12 ± 0.05								0.60 ± 0.05
0505	1.90 max.	1.90 max.								1.50 max.
0603	1.00 + 0.05/- 0.10	1.80 ± 0.10					4.0 ± 0.10			0.95 ± 0.05
0805	1.50 ± 0.10	2.30 ± 0.10								

CARDBOARD CARRIER TAPE

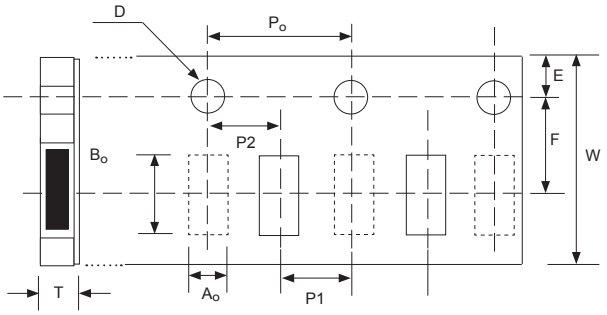

EMBOSSED PLASTIC CARRIER TAPE DIMENSIONS (mm)

Type	A_o	B_o	W	F	E	P_0	P_1	P_2	D_0	K	T
1111	<3.05	<3.80	8.00 ± 0.20	3.50 ± 0.05	1.75 ± 0.10	4.0 ± 0.10	4.0 ± 0.10	2.0 ± 0.05	1.50 +0.1/-0	<2.50	0.23 ± 0.10

