AC Axial Fans

General Specifications

Motor Structure: Shaded Pole Induction Motor
Motor Protection: Impedance Protection
Insulation Resistance: 10M Ohm or over with DC500V Megger
Dielectric Withstand Voltage: AC 700V 1s
Allowable Ambient Temperature Range:
-10 degree C ~ +66 degree C (Operating)
-40 degree C ~ +70 degree C (Storage)
(non-condensing environment)

Material

Casing: Aluminum Black Painting
Impeller: Plastic (Black) UL94V-0
Lead Wire or Terminal: AWG22, UL3266 Faston #110 or equivalent

order part 11938SB-B3N-QA-00_60Hz Ball Bearing Fan Plastic Blades Potting AC Axial Fans



11938SB-B3N-QA plastic pot panel cut out

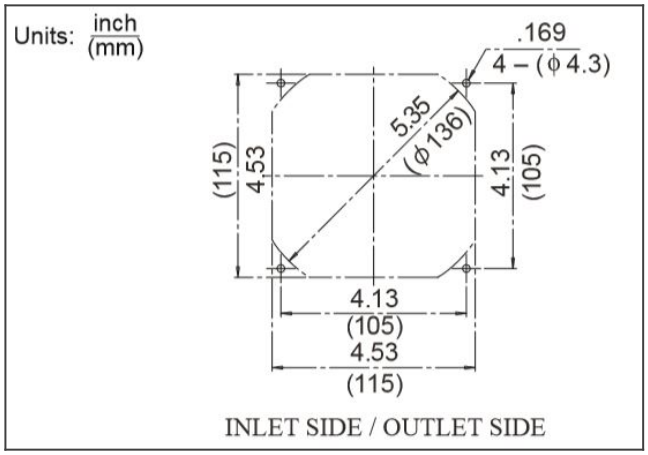

11938SB-B3N-QA plastic pot characteristics curve

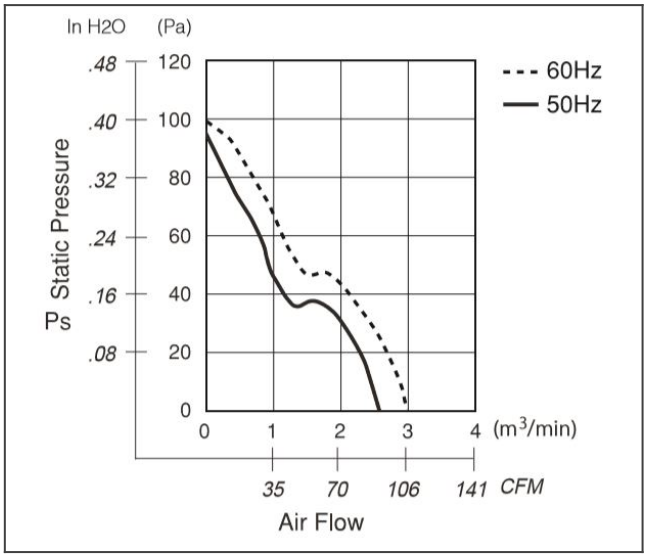

11938SB-B3N-QA plastic pot product drawing

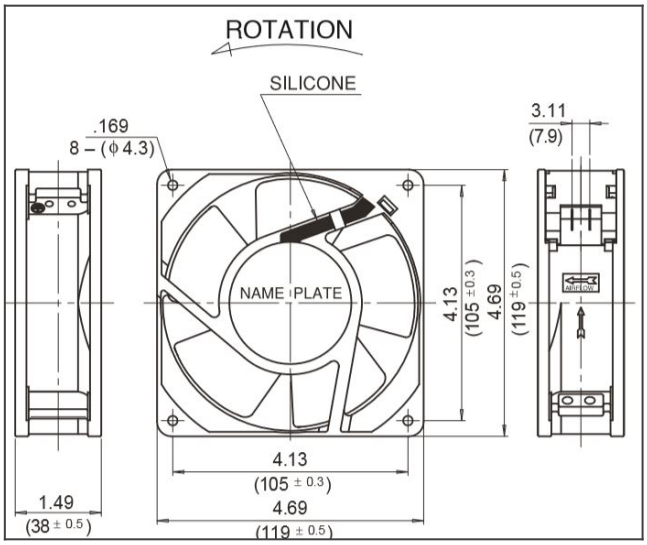

Detailed Specifications

Expected Life:	*Failure rate 10% 25deg.C 100,000 hours
Nominal Voltage:	230[V]
Frequency:	60[Hz]
Starting Voltage:	175[V]
Industry:	Food Processing / Industrial Machines / Medical Equipment / Consumer Technology
AC Fans:	Ball Bearing Fan Plastic Blades Potting
Current:	0.12[A]
Input Power (+10% - 20%):	15.5[V]
Speed:	3100[min-1]
Max. Air Flow:	3[m3/min]
Max. Air Flow:	107.1[CFM]
Max. Static Pressure:	100[Pa]
Max. Static Pressure:	0.4[In H2O]
Noise:	44[dB]
Fan Size:	119[mm]
Fan Width:	38[mm]
Mass:	610[g]