DC Fans

General Specifications

Motor Protection: Auto Restart/Polarity Protection
Insulation Resistance: 10M Ohm or over with a DC500V Megger
Dielectric Withstand Voltage: AC 700V 1st
Allowable Ambient Temperature Range:
-10 degree C ~ +60 degree C (Operating)
-40 degree C ~ +60 degree C (Storage)
(non-condensing environment)

Material

Casing: Plastic (Black) UL94V-0
Impeller: Plastic (Black) UL94V-0
Lead Wire: UL1016, AWG26, +Red, -Black

order part 2406KL-05W-B30-L00 Ball Bearing Fan DC Fans

2406KL characteristic chart

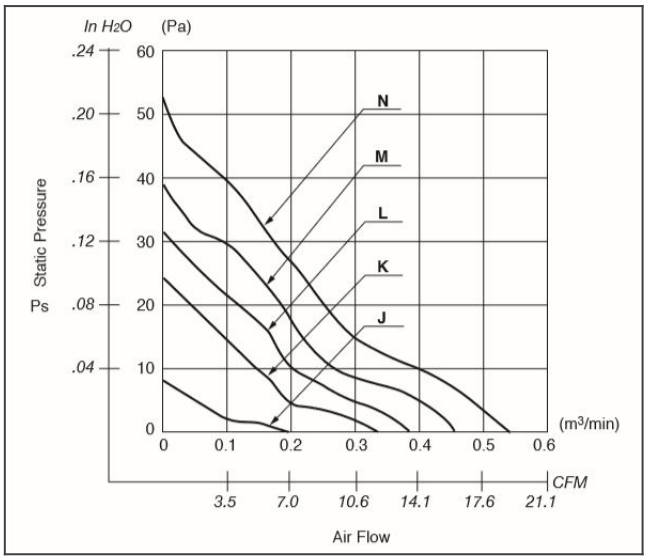

2406KL panel cut out

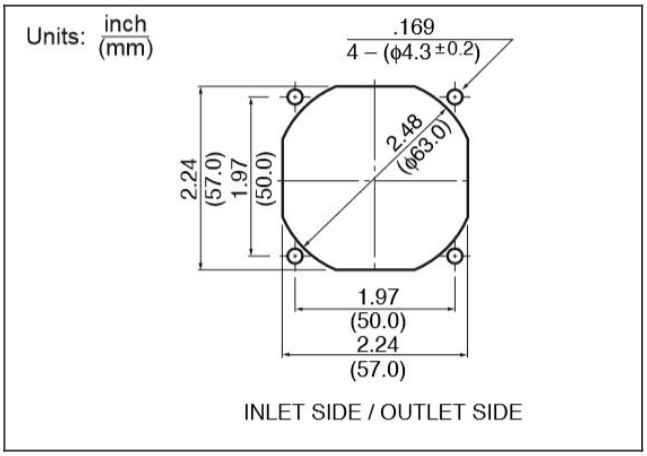

2406KL product drawing

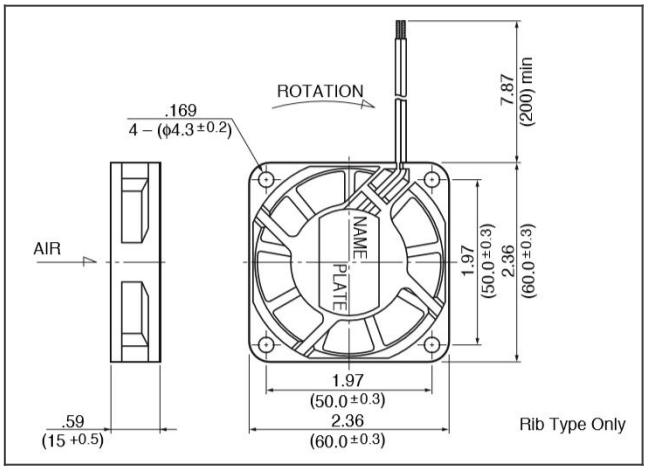

Detailed Specifications

Expected Life:	25 degree C 70,000 Hours (L10)
DC Fan:	Ball Bearing Fan
Nominal Voltage:	24[V]
Operating Voltage Lower:	12[V]
Operating Voltage Upper:	27.6[V]
Current:	0.06[A]
Input Power:	1.4[W]
Speed:	3600[min-1]
Max. Air Flow:	0.4[m3/min]
Max. Air Flow:	14.1[CFM]
Max. Static Pressure:	31.3[Pa]
Max. Static Pressure:	0.13[In H2O]
Noise:	28[dB]
Mass:	45[g]
Fan Size:	60[mm]
Fan Width:	15[mm]
Life Expectancy L10:	25 degree C 70,000 Hours (L10)
Series:	2406KL