Broadband Silicon Capacitor BBSC 0201 22nF BV30

Rev. 3.02

General description

BBSC Capacitor targets Optical communication system such as ROSA/TOSA, SONET and all optoelectronics as well as High speed data system or products. The BBSC is suitable for DC blocking, feedback, coupling and bypassing applications in all broadband optoelectronics and High-speed data system. The unique technology of integrated passive device in silicon, developed by Murata Integrated Passive, offers unique performances with low insertion loss, low reflection and phase stability from 73 KHz to 50 GHz+.

These capacitors in ultra-deep trenches in silicon have been developed in a semiconductor process, in order to integrate trench MOS capacitor providing high capacitance value of 22 nF (for kHz–MHz range) and high frequency MIM capacitors for low capacitance value for GHz range), both in a SMT 0201 [0.8 x 0.6mm].

The BBSC capacitor provides very high stability of the capacitance over temperature, voltage variation as well as a very high reliability. BBSC capacitors have an extended operating temperature ranging from -55 to 150°C, with very low capacitance change over temperature (+70ppm/K).

Assembly: Suitable for surface mounted application on rigid PCB, ceramic substrate, FR4 (laminate) or flex platforms.
Finishing Bump finishing: ENIG
Copper pads optional for embedding version and SAC305 type 6 for pre-bumping version, as an optional finishing.

Key features

- Broadband performance to 50 GHz
- Resonance free
- Phase stability
- Insertion low < 0.3dB Typ. up to 50 GHz
- Ultra-high stability of capacitance value:
  - Temperature 70ppm/K (-55 °C to +150 °C)
  - Voltage <-0.1%/Volt
  - Negligible capacitance loss through ageing
- Low profile: 400µm, 100 µm on request
- Break down voltage: 30V
- Low leakage current < 70pA
- High reliability
- High operating temperature (up to 150°C)
- Compatible with high temperature cycling during manufacturing operations (exceeding 300 °C)
- Compatible with EIA 0201 footprint

Key applications

- ROSA/TOSA
- SONET
- High speed digital logic
- Microwave/millimetre system
- High volumetric efficiency (i.e. *capacitance* per unit *volume)*
- Broadband test equipment

Product

Functional diagram

The next figure provides implementation set-up diagram.

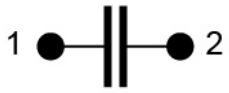

Figure 1 Block Diagram

Electrical performances

Symbol	Parameter	Conditions	Min.	Typ.	Max.	Unit
C	Capacitance value	@+25°C	-	22	-	nF
ΔC_P	Capacitance tolerance [1]	@+25°C	-15	-	+15	%
T_{OP}	Operating temperature		-55	25	150	°C
T_{STG}	Storage temperature [2]		-70	-	165	°C
ΔC_T	Capacitance temperature variation	-55 °C to 150 °C	-	70	-	ppm/K
RV_{DC}	Rated voltage [3]		-	-	16[4] 14.7[5]	V_{DC}
BV	Break down voltage	@+25°C	30	-	-	V
ΔC_{RVDC}	Capacitance voltage variation	From 0 V to RV_{DC}, @+25°C	-	-	-0.1	$\%/V_{DC}$
IR	Insulation resistor	@RV_{DC}, +25°C, 120s	-	10	-	GΩ
ESL	Equivalent Serial Inductance	@+25°C, SRF shunt mode	-	20	-	pH
ESR	Equivalent Serial Resistance	@+25°C, shunt mode	-	220	-	mOhm
Fc_{-3dB}	Cut-off frequency at -3dB	@25°C	-	73	86	kHz
IL	Insertion loss	@ 20 GHz, +25°C	-	0.2	-	dB
		@ 40 GHz, +25°C	-	0.3	-	dB
		@50 GHz, +25°C	-	0.4	-	dB
RL	Return loss	Up to 50 GHz, +25°C	16	-	-	dB
ESD	HBM stress [6]	JS-001-2017	2	-	-	kV

Table 1 - Electrical performances

[1]: other tolerance available upon request
[2]: without packaging
[3]: Lifetime is voltage and temperature dependent, please refer to application note 'Lifetime of 3D capacitors'
[4]: 10 years of intrinsic life time prediction at 100°C continuous operation
[5]: 10 years of intrinsic life time prediction at 150°C continuous operation
[6]: please refer to application note 'ESD Challenge in 3D Murata Integrated Passive technology'

Product

Module S-parameters of 22nF BBSC in transmission mode

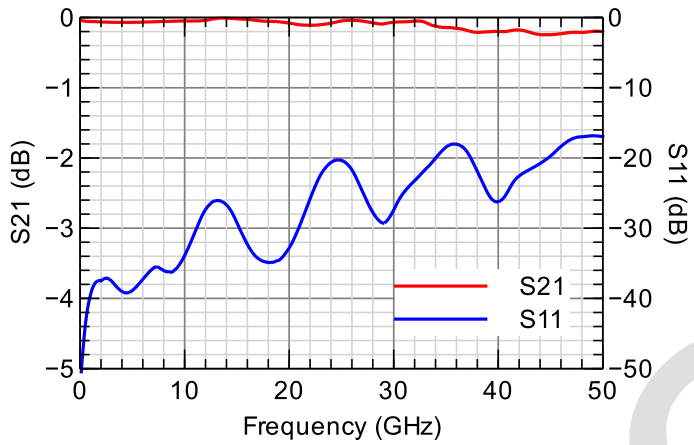

Figure 2 - 22nF BBSC measurement results (module of S-parameters)

Schematic of 22nF BBSC in transmission mode

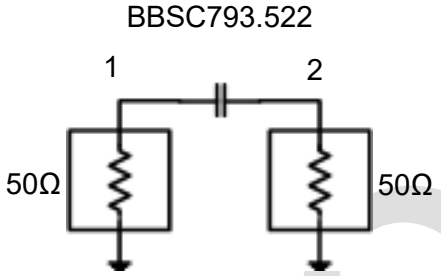

6.6-mil Rogers 4350B.
Microstrip mode – line width = 0.40 mm and gap = 0.300 mm.
(nominal 50 ohm characteristic impedance).

Figure 3 – 22nF BBSC measurement schematic

Example of surface mounted 0201

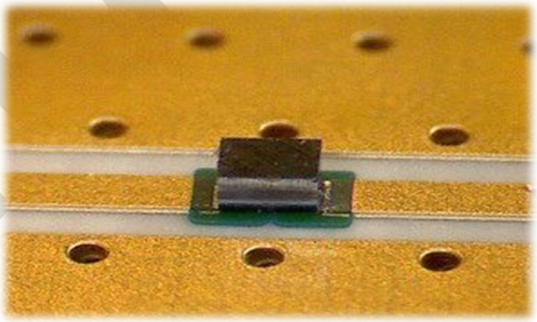

Figure 4 – micro picture of BBSC mounted on board in coplanar mode

Product

Pinning definition

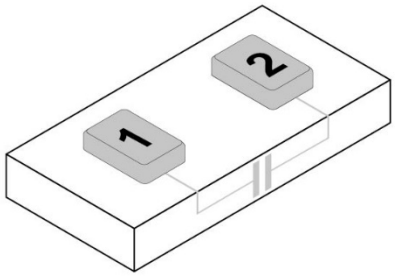

Figure 5 Pin configuration

pin #	Symbol	Coordinates X / Y
1	Signal	-225.0 / 0.0
2	Signal	225.0 / 0.0

Table 2 - Pining description. Reference (0,0) located at the centre of the die.

Ordering Information

Part number	Package		
	Packaging (1)	Finishing	Description
939113793522-T3N	7" T&R (1 000 pieces/reel) (3)	ENIG (2)	BBSC 0201 - 22nF – 2 pads – 0.8 x 0.6 x 0.40mm (4)
939114793522-T3N	7" T&R (1 000 pieces/reel) (3)	ENIG (2)	BBSC 0201 - 22nF – 2 pads – 0.8 x 0.6 x 0.10mm (4)
939114793522-T3S	7" T&R (1 000 pieces/reel) (3)	SAC (2)	BBSC 0201 - 22nF – 2 pads – 0.8 x 0.6 x 0.10mm (4)

(1) Other Film Frame Carrier are possible on request
(2) SAC = ENIG (0.1µm Au / 5µm Ni) + SAC305 type 6 or ENIG 0.1µm Au / 5µm Ni
(3) Missing capacitors can reach 0.5%
(4) Refer to *Figure 9*

Table 3 - Packaging and ordering information

Product Name	Die Name	Description
BBSC793.522	XJ0201522	BBSC 22nF/0201/BV30 – 2 pads – 0.8 x 0.6 mm x 0.40mm
BBSC793.522	XJ0201522	BBSC 22nF/0201/BV30 – 2 pads – 0.8 x 0.6 mm x 0.10mm

Table 4 - Die information

Product

Pad Metallization

This surface mounted Silicon Capacitor is delivered as standard with ENIG (0.1µm Au / 5µm Ni) (Refer to *Figure 6*)

Other Metallization, such as SAC305 type 6 bumping (Refer to *Figure7*). Copper, Thick Gold or Aluminum pads are possible on request.

Silicon dies are not sensitive to humidity, please refer to applications notes 'Assembly Notes' section 'Handling precautions and storage'.

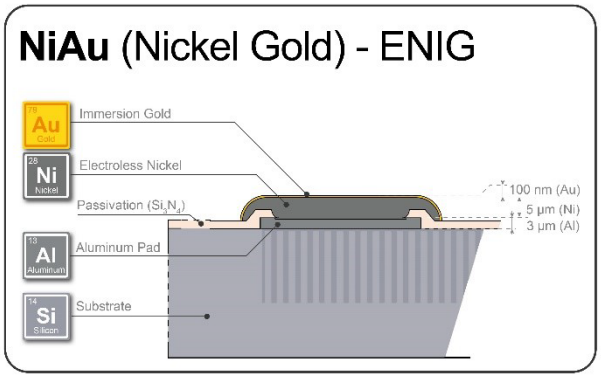

Figure 6 – Top electrode description of ENIG finishing version

Figure 7 – Top electrode description of SAC305 pre-bumped version

Material regulation

This product is RoHS compliant at the time of publication. For further information about regulation compliancy, please ask your sales representative.

Package outline

The product is delivered as a bare silicon die.

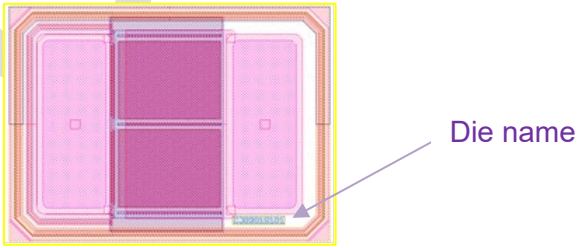

Figure 8 – Layout view

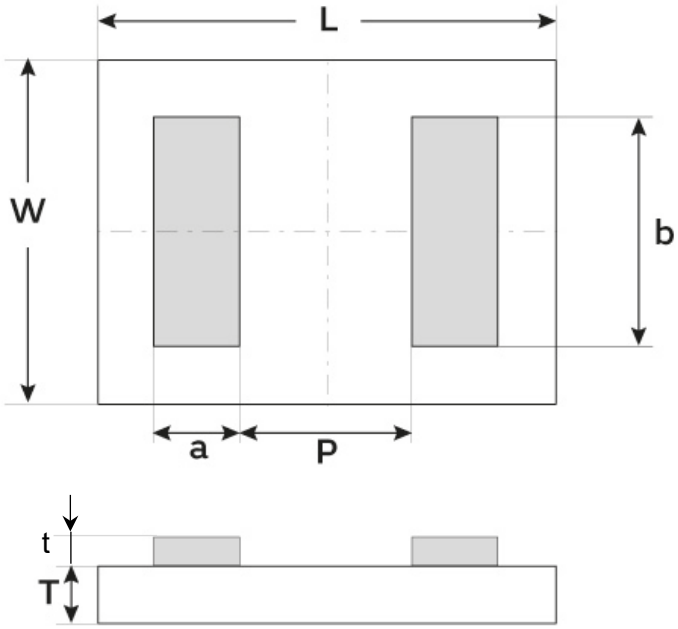

Figure 9 - Package outline drawing

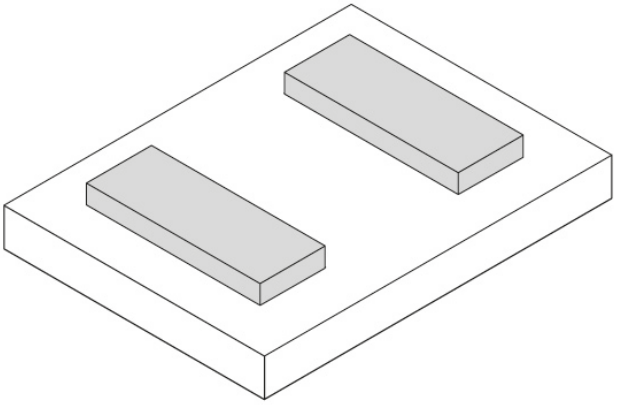

Figure 10 - Package isometric view

L (mm)	W (mm)	T (mm)	a (mm)	p (mm)	b (mm)	t (mm)
0.80 ±0.04	0.60 ±0.04	0.40 or 0.10 ±0.01	0.15	0.30	0.40	0.005(1) or 0.04(2)

Table 5 - Dimensions and tolerances

(1) Standard with ENIG
(2) Solder joint height after reflow on board in case of SAC305 pre-bumping.

Assembly

BBSC series is compatible with standard reflow technology.

It is recommended to design mirror pads on the PCB.

For further information, please see our mounting application note.

The attachment techniques recommended by Murata on the customer's substrates are fully detailed in specific documents available on our website. To assure the correct use and proper functioning of Murata capacitors **please download the assembly instructions on https://www.murata.com/en-us/products/capacitor/siliconcapacitors and read them carefully.**

Figure 11 Scan this QR Code to access the Murata Silicon Capacitor web page

Product

Packaging format

Please refer to application note ‘Products Storage Conditions and Shelf Life’.

Tape and Reel: Dies are flipped in the tape cavity (bump down) withdie ID located near the driving holes of the tape.

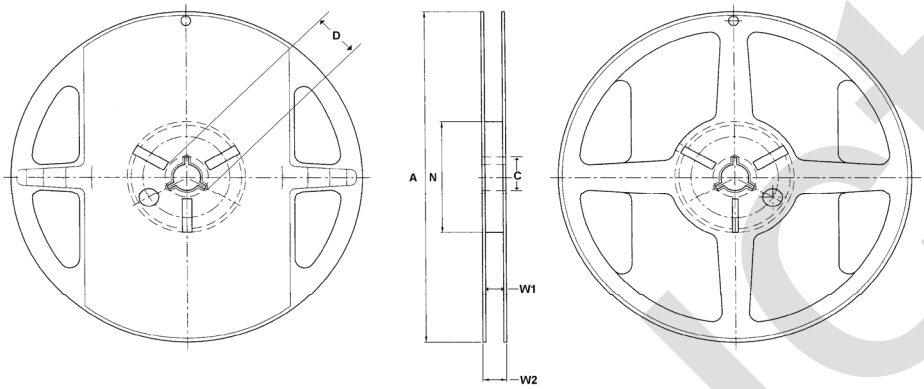

Figure 12 - Reel drawing

Tape Width	Diameter A	C	D	Hub N	W1	W2
8	178 (7 inches)	13.5	20.2	60	9.3	11.5

Table 6 - Reel dimensions (mm)

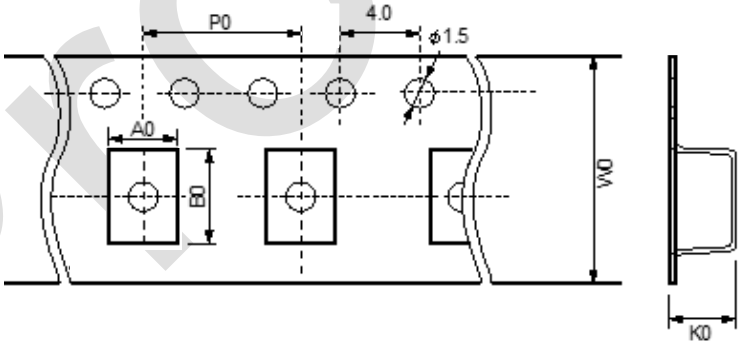

Figure 13 – Tape drawing (not to scale)

Cavity dimensions			Carrier tape width W0	Carrier tape pitch P0	Quantity per reel	Die thickness
A0	B0	K0				T(mm)
0.76	0.96	0.22	8	2	1 000	100µm
0.74	0.94	0.57	8	4	1 000	400µm

Table 7 - Tape dimensions (mm)

Product

Definitions

Data sheet status

Objective specification: This data sheet contains target or goal specifications for product development.

Preliminary specification: This data sheet contains preliminary data; supplementary data may be published later.

Product specification: This data sheet contains final product specifications.

Limiting values

Stress above one or more of the limiting values may cause permanent damage to the device. These are stress ratings only and operation of the device at these or any other conditions above those given in the Electrical performances sections of this specification is not implied. Exposure to limiting values for extended periods may affect device reliability.

Application information

Where application information is given, it is advisory and does not form part of the specification.

Revision history

Revision	Date	Description	Author
Release 1.00	**2016 Nov. 07th**	**Objective specification**	**OGA**
Release 2.00	**2021 April 23rd**	**Minor changes**	**OGA, LLR, SCA, CGU.**
Release 3.00	**2021 June 21st**	**Product revision**	**OGA, LLR, SCA, CGU.**
Release 3.01	**2023 Dec. 19th**	**Extended high limit frequency / updated packing**	**DYE**
Release 3.02	**2025 Oct. 20th**	**Ordering information has been updated according to the latest product lineup and specification.**	**HFU - CGU**

Disclaimer / Life support applications

These products are not designed for use in life support appliances, devices, or systems where malfunction of these products can reasonably be expected to result in personal injury. Murata customers using or selling these products for use in such applications do so at their own risk and agree to fully indemnify Murata for any damages resulting from such improper use or sale.

Reproduction in whole or in part is prohibited without the prior written consent of the copyright owner. The information presented in this document does not form part of any quotation or contract, is believed to be accurate and reliable and may be changed without notice. No liability will be accepted by the publisher for any consequence of its use. Publication thereof does not convey nor imply any license under patent or other industrial or intellectual property rights.

Murata Integrated Passive Solutions S.A. makes no representation that the use of its products in the circuits described herein, or the use of other technical information contained herein, will not infringe upon existing or future patent rights. The descriptions contained herein do not imply the granting of licenses to make, use, or sell equipment constructed in accordance therewith. Specifications are subject to change without notice.

www.murata.com

mis@murata.com