Note: If you have not downloaded this document from our official website, please note that the information provided may not be the most current.
Please download the latest datasheet of CSTLS4M00G53-B0 from the official website of Murata

http://www.murata.com/en-us/products/productdetail?partno=CSTLS4M00G53-B0

CSTLS4M00G53-B0

In Production | Recommended | RoHS | REACH

Applications

Unsuitable Applications	Please be sure to read and comply with these "Precautions for use."
Specific Applications	Consumer equipment,Industrial equipment except for transportation & facility & energy equipment,Medical equipment [GHTF A/B],Mobile Electronics Please refer to Our Website and specifications, etc. for information about the performance, functions, quality, management, and safety required for the above applications, and use Products after confirming the performance and reliability of the actual Product.

Appearance & Shape



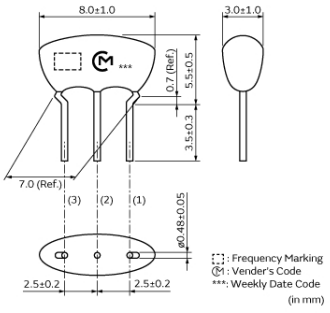

Packaging Information

Packaging	Specifications	Standard Packing Quantity
B0	Bulk	500

Features

MURATA's ceramic resonator, CERALOCK has been widely applied as the most suitable component for clock oscillators in a broad range of microprocessors.
The CSTLS series can be used in the design of oscillation circuits not requiring external load capacitors, enabling both high-density mounting and cost reduction.

Features
1. Oscillation circuits do not require external load capacitors. There is some variation in capacitance values applicable to various IC.
2. Stable over a wide temperature range.
3. Compact, lightweight and exhibit superior shock resistance performance.
4. Enable the design of oscillator circuits requiring no adjustment.
5. Cost-effective and reliable availability.

Attention
1.This datasheet is downloaded from the website of Murata Manufacturing Co., Ltd. Therefore, it's specifications are subject to change or our products in it may be discontinued without advance notice. Please check with our sales representatives or product engineers before ordering.
2.This datasheet has only typical specifications because there is no space for detailed specifications.
Therefore, please review our product specifications or consult the approval sheet for product specifications before ordering.

Note: If you have not downloaded this document from our official website, please note that the information provided may not be the most current.
Please download the latest datasheet of CSTLS4M00G53-B0 from the official website of Murata

http://www.murata.com/en-us/products/productdetail?partno=CSTLS4M00G53-B0

CSTLS4M00G53-B0

Specifications

Product Type	Ceramic Resonator (CERALOCK)
Series	CSTLS_G
Frequency	4.000MHz
Frequency Tolerance	+/-0.50% max.
Operating Temperature Range	-20℃~80℃
Frequency Shift by Temperature	+/-0.20% max.
Frequency Aging	+/-0.20% max.
Resonant Impedance (R1)	30ohm max.
Built-in Load Capacitance (CL1/CL2)	15pF
Shape	Lead
Wash	Not available
L x W (size)	9.0x6.0mm
Mass	126.13mg

Attention
1.This datasheet is downloaded from the website of Murata Manufacturing Co., Ltd. Therefore, it's specifications are subject to change or our products in it may be discontinued without advance notice. Please check with our sales representatives or product engineers before ordering.
2.This datasheet has only typical specifications because there is no space for detailed specifications.
Therefore, please review our product specifications or consult the approval sheet for product specifications before ordering.