Note: If you have not downloaded this document from our official website, please note that the information provided may not be the most current.
Please download the latest datasheet of CSTNE8M00G52A000R0 from the official website of Murata

http://www.murata.com/en-us/products/productdetail?partno=CSTNE8M00G52A000R0

CSTNE8M00G52A000R0

In Production | Recommended | AEC-Q200 | RoHS | REACH

Applications

Unsuitable Applications	Please be sure to read and comply with these "Precautions for use."
Specific Applications	Automotive powertrain/safety equipment Please refer to Our Website and specifications, etc. for information about the performance, functions, quality, management, and safety required for the above applications, and use Products after confirming the performance and reliability of the actual Product.

Appearance & Shape

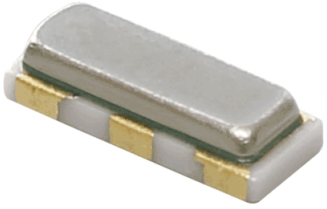

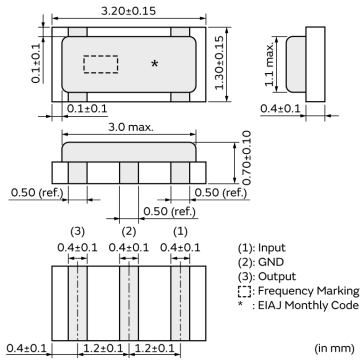

Packaging Information

Packaging	Specifications	Standard Packing Quantity
R0	180mm Embossed Tape	3000

Features

MURATA's package technology expertise has enabled the development of the Chip CERALOCK.
This diverse series owes its development to MURATA's original mass production techniques and high reliability, and has achieved importance in the worldwide automotive market.

Features
1. High reliability and available for a wide temperature range.
2. Oscillation circuits do not require external load capacitors.
3. Available for a wide frequency range.
4. Extremely small and have a low profile.
5. No adjustment is necessary for oscillation circuits.
6. Stable supply is ensured due to not using precious metal(Palladium).

Attention
1.This datasheet is downloaded from the website of Murata Manufacturing Co., Ltd. Therefore, it's specifications are subject to change or our products in it may be discontinued without advance notice. Please check with our sales representatives or product engineers before ordering.
2.This datasheet has only typical specifications because there is no space for detailed specifications.
Therefore, please review our product specifications or consult the approval sheet for product specifications before ordering.

Note: If you have not downloaded this document from our official website, please note that the information provided may not be the most current.
Please download the latest datasheet of CSTNE8M00G52A000R0 from the official website of Murata

http://www.murata.com/en-us/products/productdetail?partno=CSTNE8M00G52A000R0

CSTNE8M00G52A000R0

Specifications

Product Type	Ceramic Resonator (CERALOCK)
Series	CSTNE_G_A
Frequency	8.000MHz
Frequency Tolerance	+/-0.50% max.
Operating Temperature Range	-40℃~125℃
Frequency Shift by Temperature	+/-0.20% max.
Frequency Aging	+/-0.10% max.
Resonant Impedance (R1)	40ohm max.
Built-in Load Capacitance (CL1/CL2)	10pF
Shape	SMD
Wash	available
L x W (size)	3.2x1.3mm
Mass	11.73mg

Attention
1.This datasheet is downloaded from the website of Murata Manufacturing Co., Ltd. Therefore, it's specifications are subject to change or our products in it may be discontinued without advance notice. Please check with our sales representatives or product engineers before ordering.
2.This datasheet has only typical specifications because there is no space for detailed specifications.
Therefore, please review our product specifications or consult the approval sheet for product specifications before ordering.