The Future of Analog IC Technology®

MPQ9841

36V, 1A, Low I_Q, Synchronous Step-Down Converter AEC-Q100 Qualified

DESCRIPTION

The MPQ9841 is a high-frequency, synchronous, rectified, step-down, switch-mode converter with built-in power MOSFETs. It offers a very compact solution that achieves 1A of continuous output current with excellent load and line regulation over a wide 3.3V to 36V input supply range. The switching frequency can be programmed or synchronized to an external clock in the range of 350kHz to 2.5MHz. The synchronous operation and ultra-low 14μA sleep mode quiescent current provide high efficiency over the output current load range, allowing the MPQ9841 to be used in a variety of step-down applications in automotive input environments and battery-powered applications.

Peak-current-mode operation provides fast transient response and eases loop stabilization. The excellent low dropout performance allows the MPQ9841 to be used in high duty cycle applications.

Full protection features include over-current protection (OCP), short-circuit protection (SCP), and thermal shutdown. An open-drain power good (PG) signal indicates when the output is within 10% of its nominal voltage.

The MPQ9841 is available in a space-saving QFN-16 (3mmx4mm) package.

FEATURES

- 2μA Low Shutdown Supply Current
- 14μA No-Load Quiescent Current
- Internal 125mΩ High-Side and 115mΩ Low-Side MOSFET
- 350kHz to 2.5MHz Programmable Switching Frequency
- Power Good (PG) Output
- External Soft Start (SS)
- 80ns Minimum On Time
- Selectable Forced CCM and AAM
- Low Dropout Mode
- Hiccup Over-Current Protection (OCP)
- AEC-Q100 Grade 1
- Available in a QFN-16 (3mmx4mm) Package

APPLICATIONS

- Automotive Systems
- Industrial Power Systems

All MPS parts are lead-free, halogen-free, and adhere to the RoHS directive. For MPS green status, please visit the MPS website under Quality Assurance. "MPS" and "The Future of Analog IC Technology" are registered trademarks of Monolithic Power Systems, Inc.

TYPICAL APPLICATION

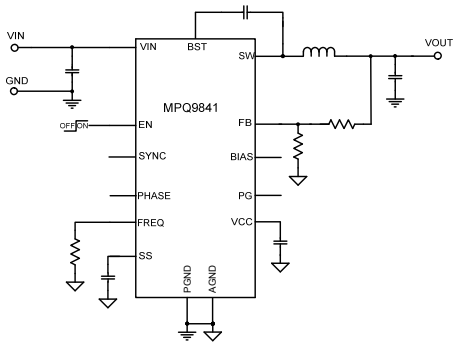

Output Adjustable Version

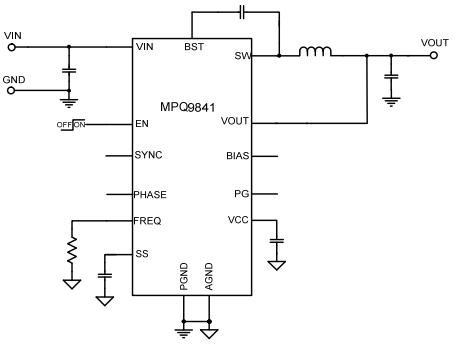

Output Fixed Version

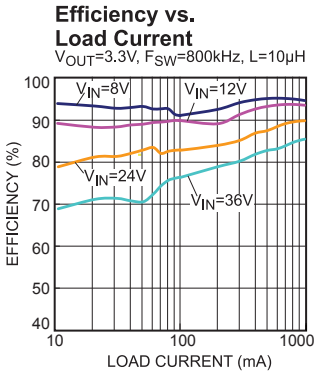

MPS Proprietary Information. Patent Protected. Unauthorized Photocopy and Duplication Prohibited.
© 2019 MPS. All Rights Reserved.

ORDERING INFORMATION

Part Number*	Package	Top Marking
MPQ9841GL	QFN-16 (3mmx4mm)	*See Below*
MPQ9841GL-AEC1		
MPQ9841GLE-AEC1**		
MPQ9841GLE-33-AEC1-Z***		
MPQ9841GLE-5-AEC1-Z***		

* For Tape & Reel, add suffix –Z (e.g. MPQ9841GL–Z)
** Wettable flank
***Under Qualification, wettable flank

TOP MARKING (MPQ9841GL & MPQ9841GL-AEC1)

MPYW
9841
LLL

MP: MPS prefix
Y: Year code
W: Week code
9841: First four digits of the part number
LLL: Lot number

TOP MARKING (MPQ9841GLE-AEC1)

MPYW
9841
LLL
E

MP: MPS prefix
Y: Year code
W: Week code
9841: First four digits of the part number
LLL: Lot number
E: Wettable lead flank

MPS Proprietary Information. Patent Protected. Unauthorized Photocopy and Duplication Prohibited.
© 2019 MPS. All Rights Reserved.

TOP MARKING (MPQ9841GLE-33-AEC1)

MPYW
9841
LLL
E33

MP: MPS prefix
Y: Year code
W: Week code
9841: First four digits of the part number
LLL: Lot number
E: Wettable lead flank
33: 3.3V fixed output

TOP MARKING (MPQ9841GLE-5-AEC1)

MPYW
9841
LLL
E5

MP: MPS prefix
Y: Year code
W: Week code
9841: First four digits of the part number
LLL: Lot number
E: Wettable lead flank
5: 5V fixed output

MPS Proprietary Information. Patent Protected. Unauthorized Photocopy and Duplication Prohibited.
© 2019 MPS. All Rights Reserved.

PACKAGE REFERENCE

TOP VIEW (MPQ9841GL & MPQ9841GL-AEC1 & MPQ9841GLE-AEC1)	TOP VIEW (MPQ9841GLE-33-AEC1 & MPQ9841GLE-5-AEC1)
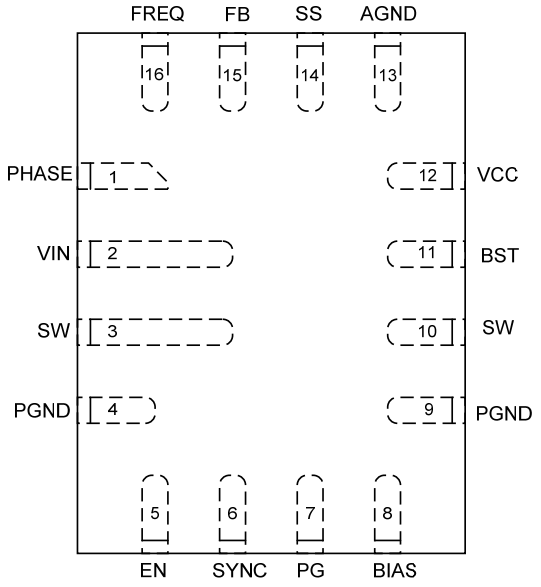	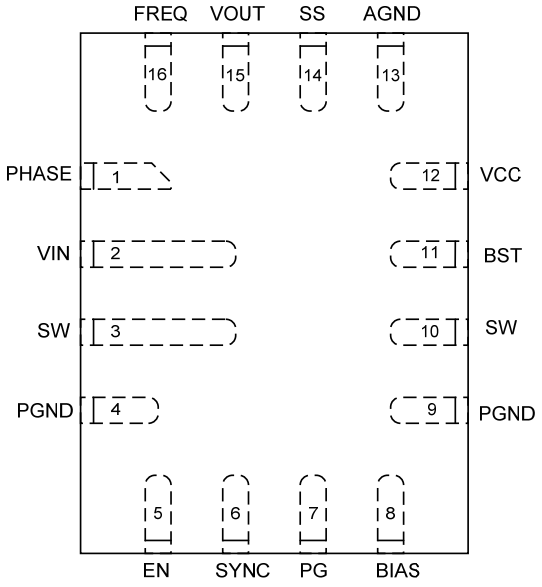
QFN-16 (3mmx4mm)	QFN-16 (3mmx4mm)

ABSOLUTE MAXIMUM RATINGS (1)

Supply voltage (VIN) ..... -0.3V to 40V
Switch voltage (V_{SW}) .....-0.3V to VIN $_{(MAX)}$ + 0.3V
BST voltage (V_{BST}) ..... $V_{SW\ (MAX)}$ + 6.5V
EN voltage (V_{EN}) ..... -0.3V to 40V
PG voltage ..... -0.3V to 40V
BIAS voltage ..... -0.3V to 20V
All other pins ..... -0.3V to 6V
Continuous power dissipation (T_A = +25°C) (2)
QFN-16 (3mmx4mm) 2.6W
Junction temperature ..... 150°C
Lead temperature ..... 260°C
Storage temperature ..... -65°C to 150°C

Recommended Operating Conditions

Supply voltage (VIN) ..... 3.3V to 36V
Operating junction temp. (T_J) (3)
……..-40°C to +125°C

Thermal Resistance (4) θ_{JA} θ_{JC}

QFN-16 (3mmx4mm)
JESD51-7 ..... 48 ..... 11 ...°C/W

Thermal Characterization Parameter (5)

QFN-16 (3mmx4mm) Ψ_{JT}
EV9841-L-00A ……..…....5.....°C/W

NOTES:

1) Absolute maximum ratings are rated under room temperature unless otherwise noted. Exceeding these ratings may damage the device.
2) The maximum allowable power dissipation is a function of the maximum junction temperature T_J(MAX), the junction-to-ambient thermal resistance θ_{JA}, and the ambient temperature T_A. The maximum allowable continuous power dissipation at any ambient temperature is calculated by P_D(MAX)=(T_J(MAX)-T_A)/ θ_{JA}. Exceeding the maximum allowable power dissipation produces an excessive die temperature, causing the regulator to go into thermal shutdown. Internal thermal shutdown circuitry protects the device from permanent damage.
3) Mission profiles requiring operation above 125°C T_J may be supported; contact MPS for details.
4) Measured on JESD51-7, 4-layer PCB.
5) Measured on EV9841-L-00A, 6.35cm* 6.35cm size, 2oz, 4-layer PCB.

MPS Proprietary Information. Patent Protected. Unauthorized Photocopy and Duplication Prohibited.
© 2019 MPS. All Rights Reserved.

ELECTRICAL CHARACTERISTICS

VIN = 12V, V_{EN} = 2V, T_J = -40°C to +125°C, unless otherwise noted. Typical values are at T_J = +25°C.

Parameter	Symbol	Condition	Min	Typ	Max	Units
VIN quiescent current	I_Q	V_{FB} = 0.85V, no load, no switching, T_J = +25°C		14	21	μA
		V_{FB} = 0.85V, no load, no switching			29	
VIN shutdown current	I_{SHDN}	V_{EN} = 0V		2	6	μA
VIN under-voltage lockout threshold rising	$INUV_{RISING}$		2.4	2.8	3.2	V
VIN under-voltage lockout threshold hysteresis	$INUV_{HYS}$			150		mV
EN rising threshold	V_{EN_RISING}		0.9	1.05	1.2	V
EN threshold hysteresis	V_{EN_HYS}			120		mV
Feedback reference voltage	V_{REF}		784	800	816	mV
		T_J = 25°C	792	800	808	mV
HS switch on resistance	R_{ON_HS}	V_{BST} - V_{SW} = 5V		125	165	mΩ
LS switch on resistance	R_{ON_LS}			115	155	mΩ
Switching frequency	F_{SW}	R_{FREQ} = 180kΩ or from sync clock	400	475	550	kHz
		R_{FREQ} = 82kΩ or from sync clock	850	1000	1150	kHz
		R_{FREQ} = 27kΩ or from sync clock	2250	2500	2750	kHz
Minimum on time (6)	t_{ON_MIN}			80		ns
SYNC input low voltage	V_{SYNC_LOW}				0.4	V
SYNC input high voltage	V_{SYNC_HIGH}		1.8			V
Current limit	I_{LIMIT_HS}	Duty cycle = 40%	2.1	2.5	2.9	A
Low-side valley current limit	I_{LIMIT_LS}	V_{OUT} = 3.3V, L = 4.7μH	1.1	1.35	1.6	A
ZCD current	I_{ZCD}			0.05		A
Reverse current limit	$I_{LIMIT_REVERSE}$			1.5		A
Switch leakage current	I_{SW_LKG}			0.01	1	μA
Soft-start current	I_{SS}	V_{SS} = 0.8V	5	10	15	μA
VCC regulator	V_{CC}			5		V
VCC load regulation		I_{CC} = 5mA			3.5	%
Thermal shutdown (6)	T_{SD}			170		°C
Thermal shutdown hysteresis (6)	T_{SD_HYS}			20		°C
PG rising threshold (V_{FB}/V_{REF})	PG_{RISING}	V_{FB} rising	85	90	95	%
		V_{FB} falling	105	110	115	
PG falling threshold (V_{FB}/V_{REF})	$PG_{FALLING}$	V_{FB} falling	79	84	89	%
		V_{FB} rising	113.5	118.5	123.5	%
PG deglitch timer	$T_{PG_DEGLITCH}$	PG from low to high		30		μs
		PG from high to low		50		μs
PG output voltage low	V_{PG_LOW}	I_{SINK} = 2mA		0.2	0.4	V

NOTE:

6) Not tested in production, guaranteed by design and characterization.

MPS Proprietary Information. Patent Protected. Unauthorized Photocopy and Duplication Prohibited.
© 2019 MPS. All Rights Reserved.

TYPICAL CHARACTERISTICS

VIN=12V, T_J=-40°C to +125°C, unless otherwise noted.

HS-FET On Resistance vs. Temperature

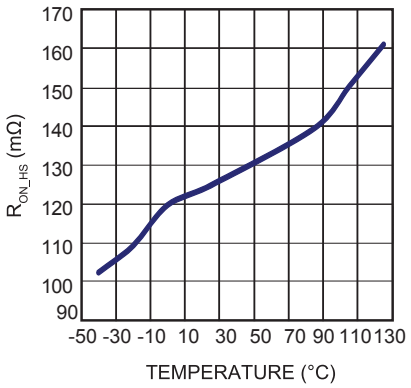

LS-FET On Resistance vs. Temperature

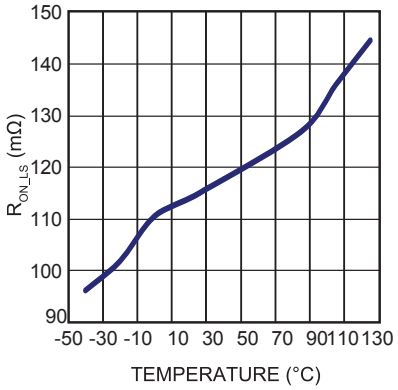

Soft-Start Current vs. Temperature

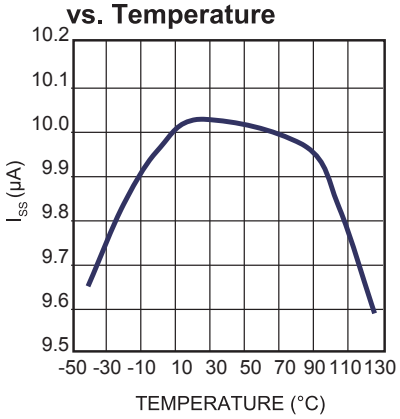

Switching Frequency vs. Temperature

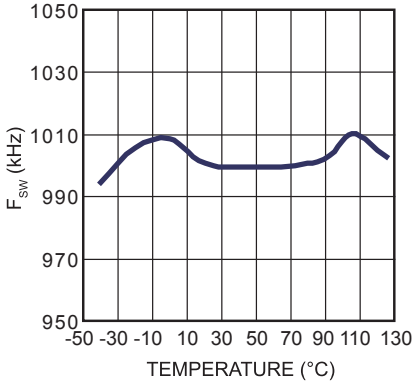

Current Limit vs. Temperature

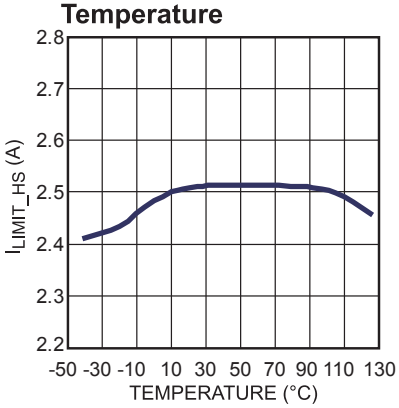

Reverse Current Limit vs. Temperature

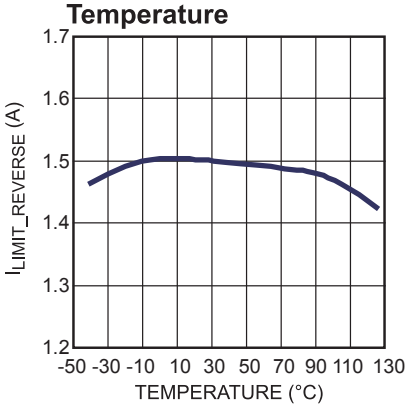

Valley Current Limit vs. Temperature

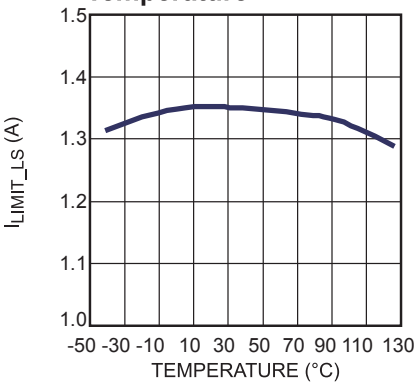

ZCD Current vs. Temperature

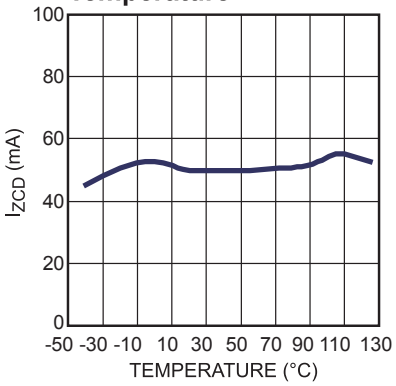

MPS Proprietary Information. Patent Protected. Unauthorized Photocopy and Duplication Prohibited.
© 2019 MPS. All Rights Reserved.

TYPICAL CHARACTERISTICS *(continued)*

VIN=12V, T_J=-40°C to +125°C, unless otherwise noted.

Quiescent Current vs. Temperature

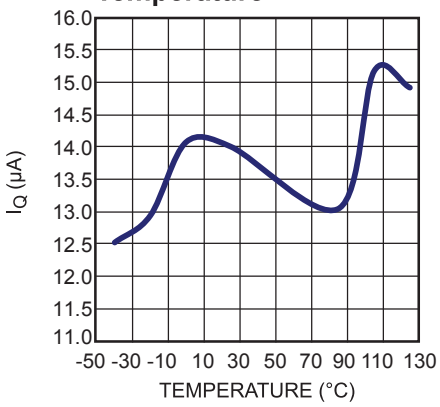

Shutdown Current vs. Temperature

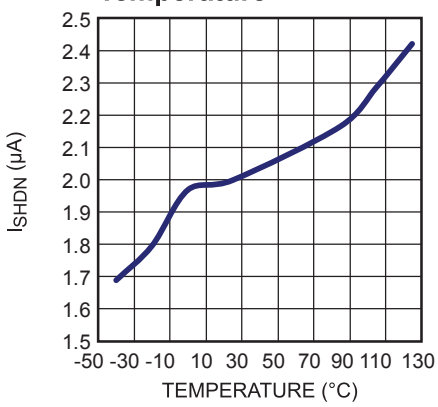

VIN UVLO Threshold vs. Temperature

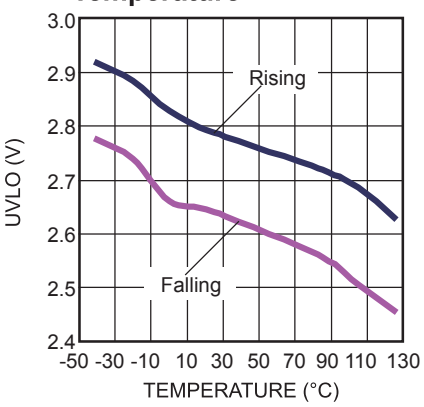

EN Threshold vs. Temperature

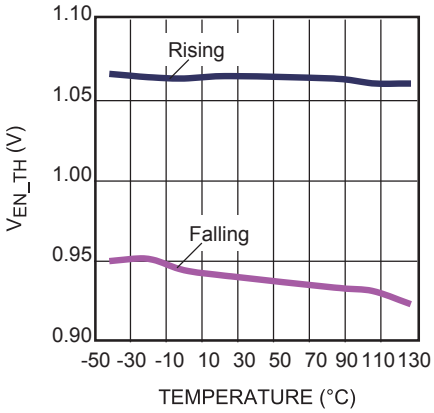

PG Rising Threshold (V_{FB} Rising) vs. Temperature

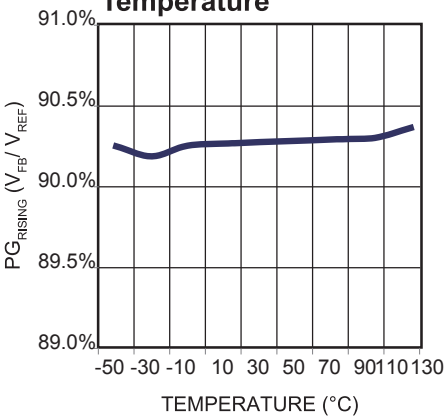

PG Rising Threshold (V_{FB} Falling) vs. Temperature

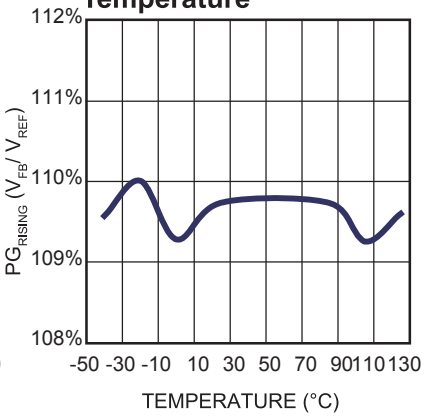

PG Falling Threshold (V_{FB} Falling) vs. Temperature

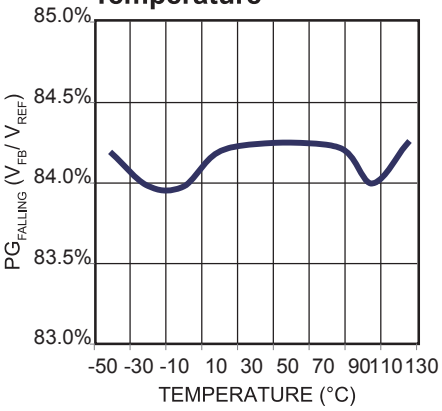

PG Falling Thershold (V_{FB} Rising) vs. Temperature

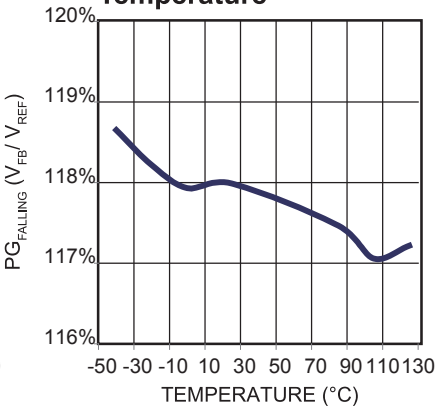

Feedback Reference vs. Temperature

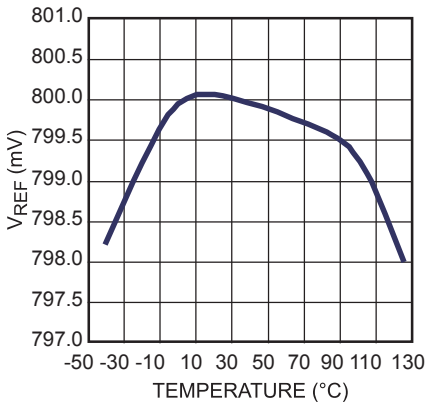

MPS Proprietary Information. Patent Protected. Unauthorized Photocopy and Duplication Prohibited.
© 2019 MPS. All Rights Reserved.

TYPICAL PERFORMANCE CHARACTERISTICS

VIN = 12V, V_{OUT} = 5V, Io=1A, L = 4.7μH, F_{SW} = 450kHz, with EMI filters, T_A = +25°C, unless otherwise noted. (7)

CISPR25 Class 5 Peak Conducted Emissions
150kHz -108MHz

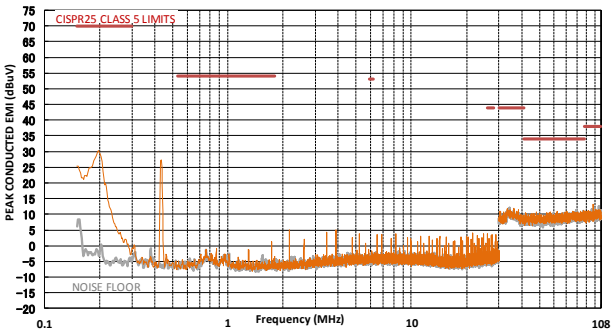

CISPR25 Class 5 Average Conducted Emissions
150kHz - 108MHz

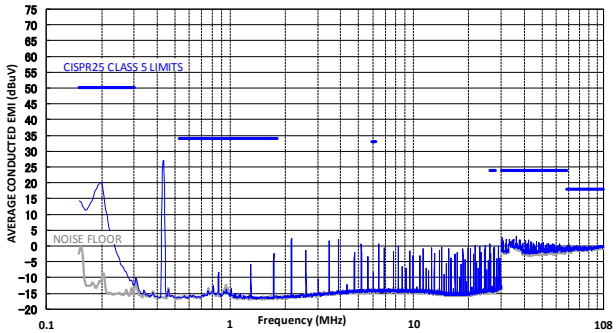

CISPR25 Class 5 Peak Radiated Emissions
150kHz-30MHz

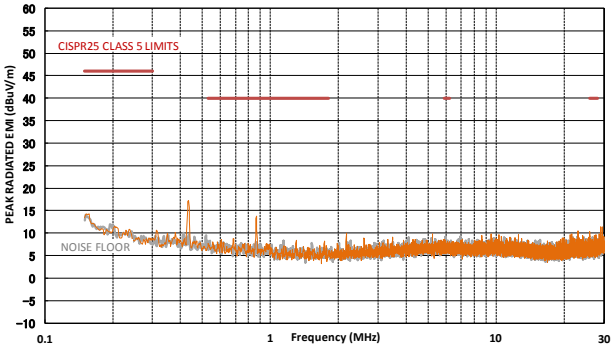

CISPR25 Class 5 Average Radiated Emissions
150kHz-30MHz

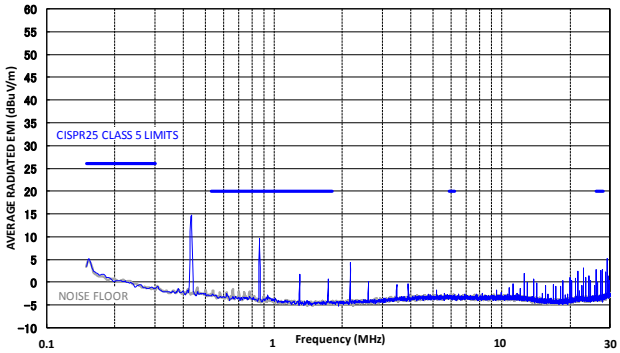

CISPR25 Class 5 Peak Radiated Emissions
Horizontal, 30MHz-200MHz

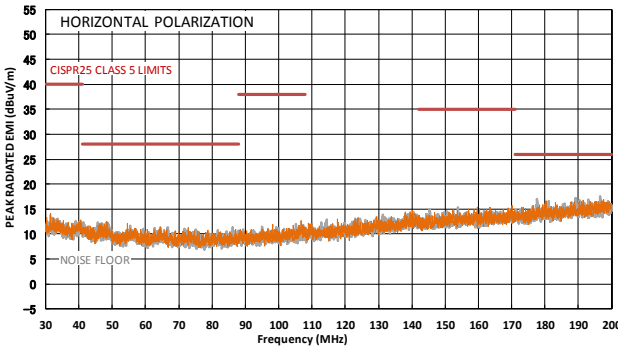

CISPR25 Class 5 Average Radiated Emissions
Horizontal, 30MHz-200MHz

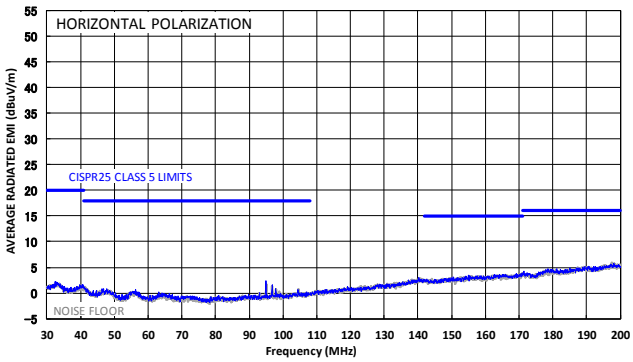

MPS Proprietary Information. Patent Protected. Unauthorized Photocopy and Duplication Prohibited.
© 2019 MPS. All Rights Reserved.

TYPICAL PERFORMANCE CHARACTERISTICS *(continued)*

VIN = 12V, V_{OUT} = 5V, Io=1A, L = 4.7μH, F_{SW} = 450kHz, with EMI filters, T_A = +25°C, unless otherwise noted. (7)

CISPR25 Class 5 Peak Radiated Emissions
Vertical, 30MHz-200MHz

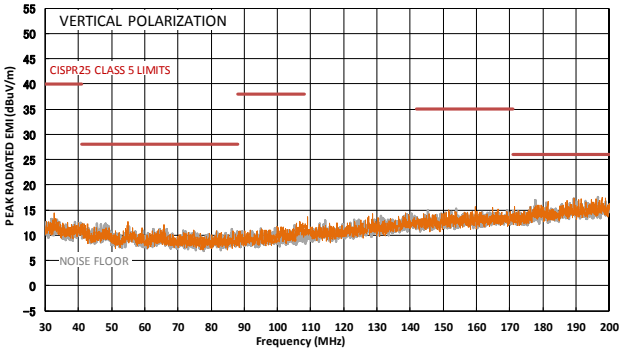

CISPR25 Class 5 Average Radiated Emissions
Vertical, 30MHz-200MHz

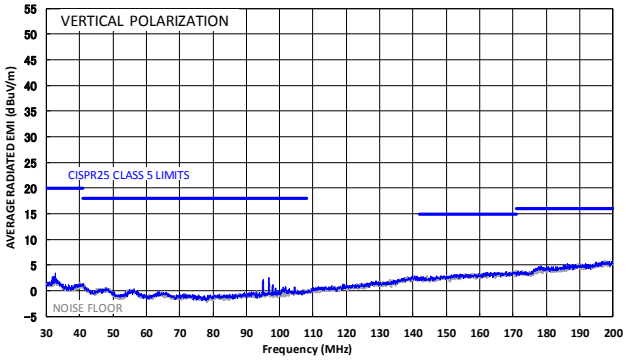

CISPR25 Class 5 Peak Radiated Emissions
Horizontal, 200MHz-1GHz

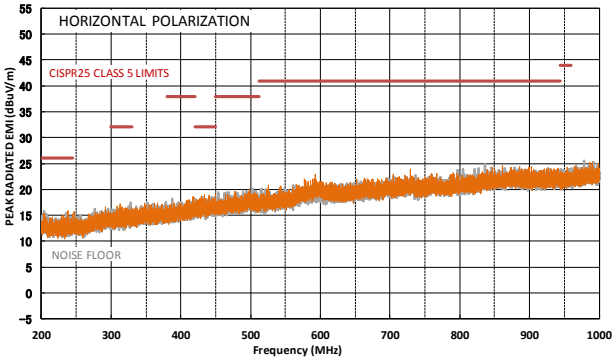

CISPR25 Class 5 Average Radiated Emissions
Horizontal,200MHz-1GHz

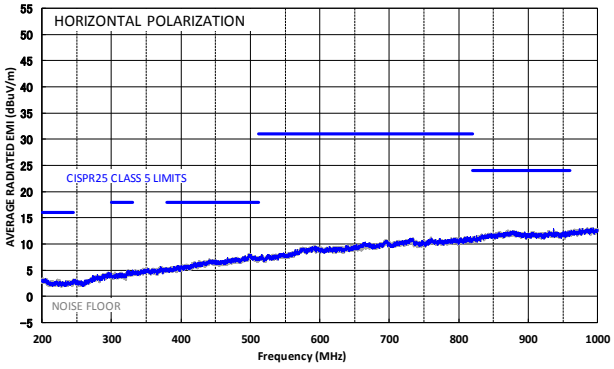

CISPR25 Class 5 Peak Radiated Emissions
Vertical, 200MHz-1GHz

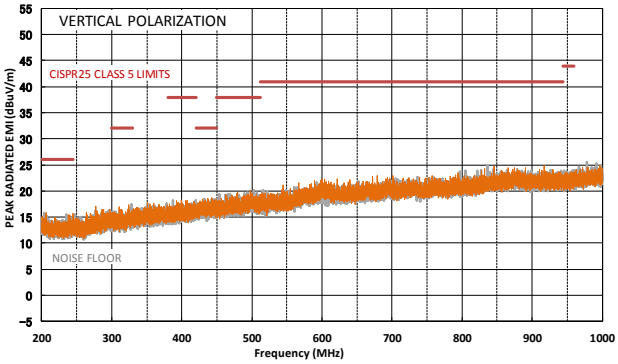

CISPR25 Class 5 Average Radiated Emissions
Vertical,200MHz-1GHz

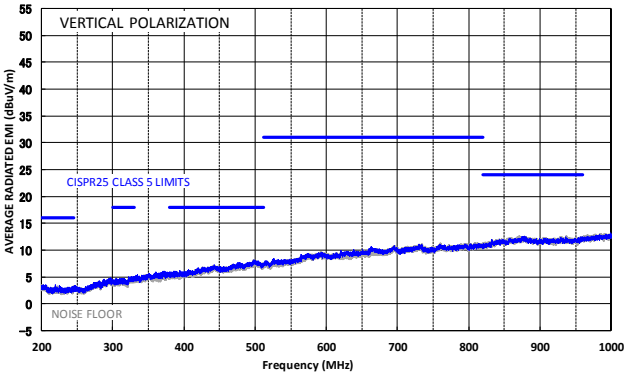

NOTE:

7) The EMC test results are based on the application circuit with EMI filters as shown in Figure14.

MPS Proprietary Information. Patent Protected. Unauthorized Photocopy and Duplication Prohibited.
© 2019 MPS. All Rights Reserved.

TYPICAL PERFORMANCE CHARACTERISTICS*(continued)*

VIN=12V, V_{OUT}=3.3V, L=10μH, F_{SW}=500kHz, AAM, T_A=+25°C, unless otherwise noted.

Current Limit vs. Duty Cycle

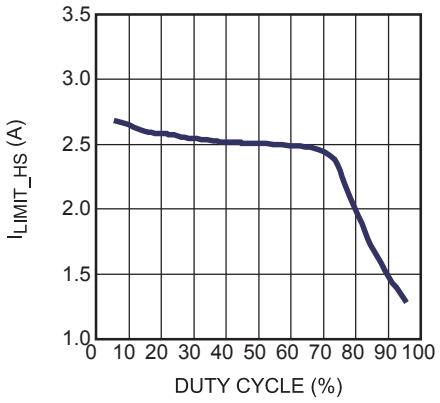

F_{SW} vs. R_{FREQ}

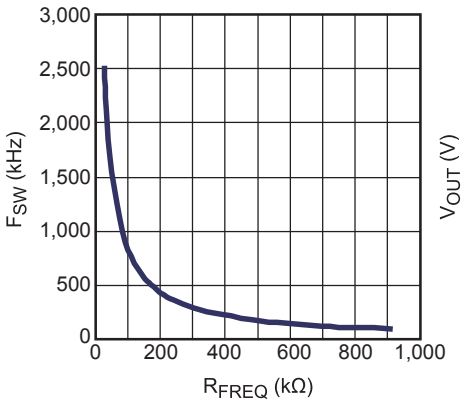

Output Voltage vs. Load Current

Dropout Performance (set nominal V_{OUT} > V_{IN})

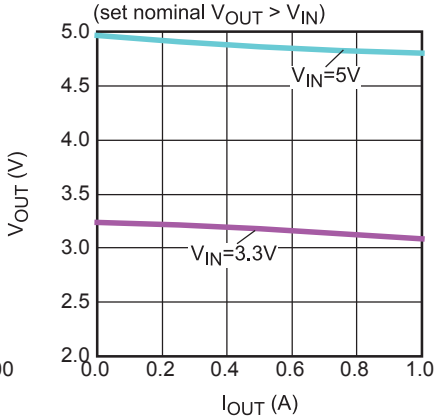

Line Regulation

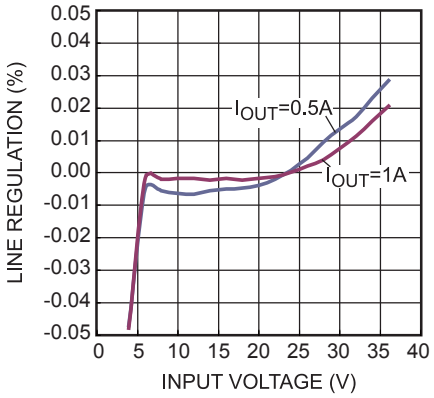

Load Regulation

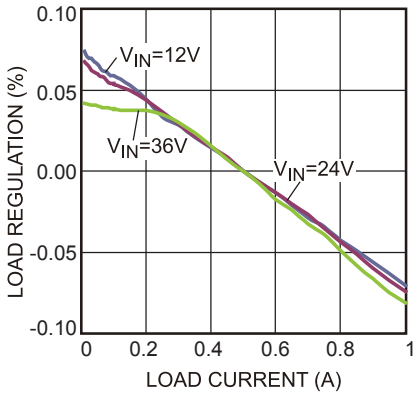

MPS Proprietary Information. Patent Protected. Unauthorized Photocopy and Duplication Prohibited.
© 2019 MPS. All Rights Reserved.

TYPICAL PERFORMANCE CHARACTERISTICS *(continued)*

VIN=12V, V_{OUT}=3.3V, L=10μH, F_{SW}=500kHz, AAM, T_A=+25°C, unless otherwise noted.

Efficiency vs. Load Current

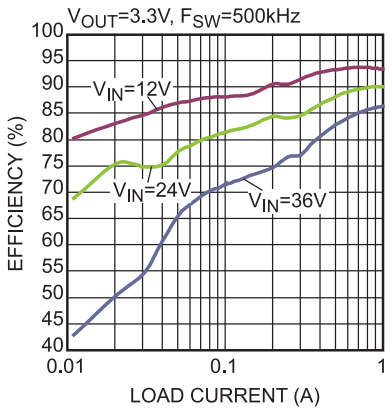

Efficiency vs. Load Current

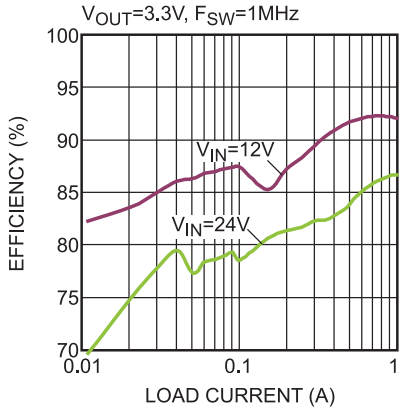

Efficiency vs. Load Current

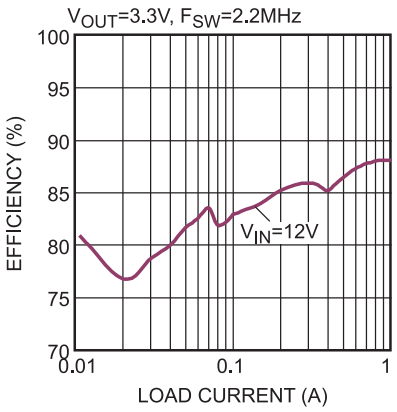

Efficiency vs. Load Current

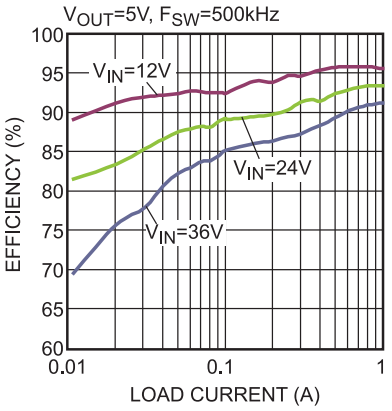

Efficiency vs. Load Current

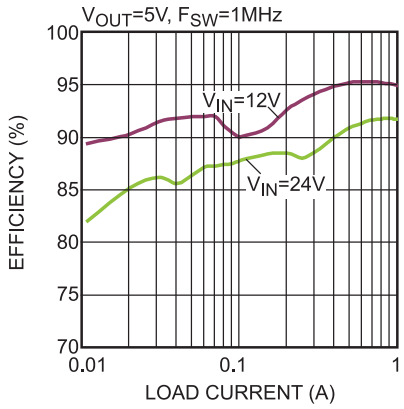

Efficiency vs. Load Current

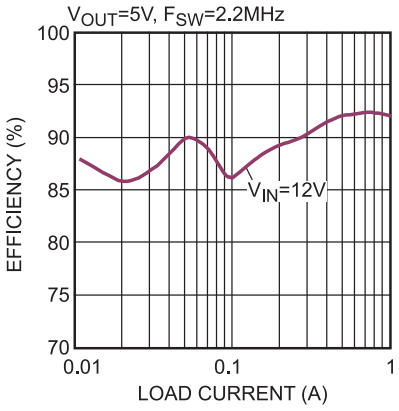

Efficiency vs. Load Current (Extreme Light Load)

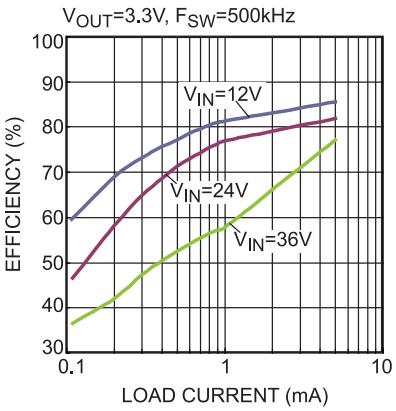

Efficiency vs. Load Current (Extreme Light Load)

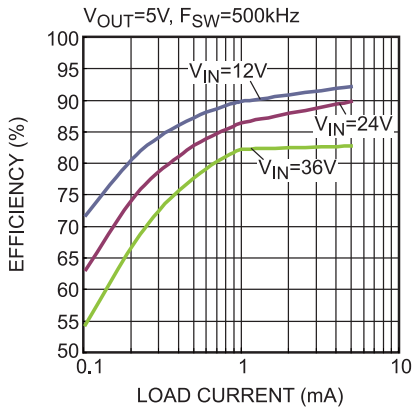

Efficiency vs. Load Current

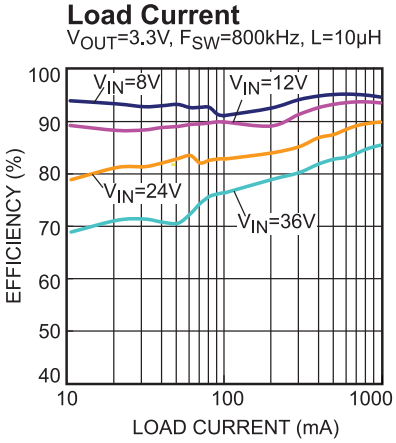

MPS Proprietary Information. Patent Protected. Unauthorized Photocopy and Duplication Prohibited.
© 2019 MPS. All Rights Reserved.

TYPICAL PERFORMANCE CHARACTERISTICS *(continued)*

VIN=12V, V_{OUT}=3.3V, L=10μH, F_{SW}=500kHz, AAM, T_A=+25°C, unless otherwise noted.

Case Temperature Rise vs. Load Current

V_{OUT}=3.3V, F_{SW}=500kHz

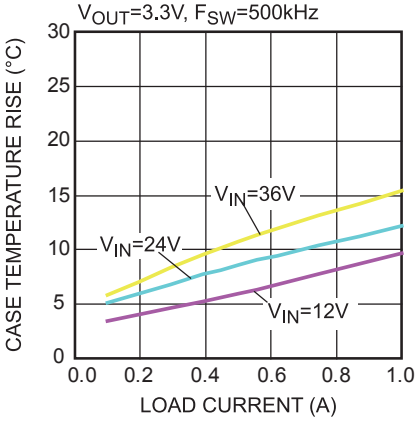

Case Temperature Rise vs. Load Current

V_{OUT}=3.3V, F_{SW}=1MHz

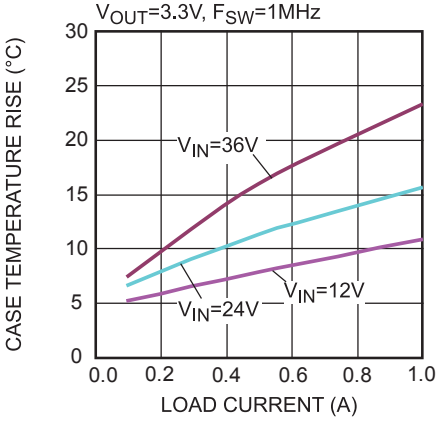

Case Temperature Rise vs. Load Current

V_{OUT}=3.3V, F_{SW}=2.2MHz

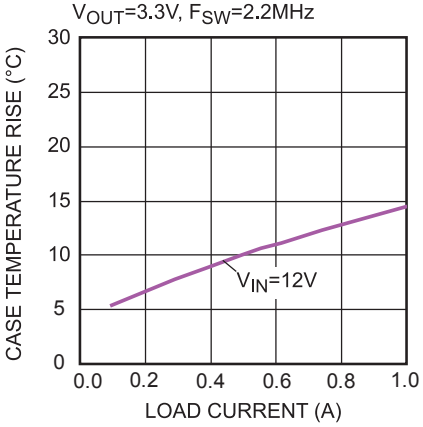

Case Temperature Rise vs. Load Current

V_{OUT}=5V, F_{SW}=500kHz

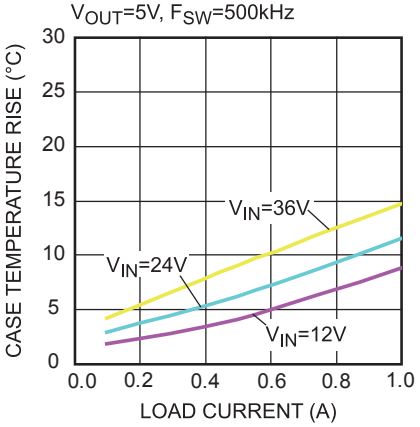

Case Temperature Rise vs. Load Current

V_{OUT}=5V, F_{SW}=1MHz

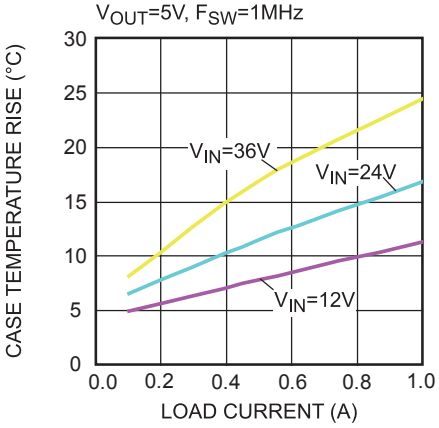

Case Temperature Rise vs. Load Current

V_{OUT}=5V, F_{SW}=2.2MHz

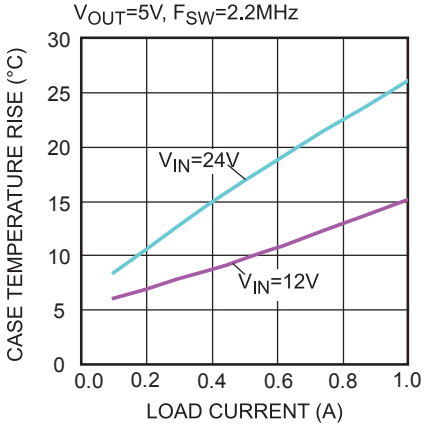

MPS Proprietary Information. Patent Protected. Unauthorized Photocopy and Duplication Prohibited.
© 2019 MPS. All Rights Reserved.

TYPICAL PERFORMANCE CHARACTERISTICS *(continued)*

VIN=12V, V_{OUT}=3.3V, L=10μH, F_{SW}=500kHz, AAM, T_A=+25°C, unless otherwise noted.

Steady State
I_{OUT}=0A, AAM Mode

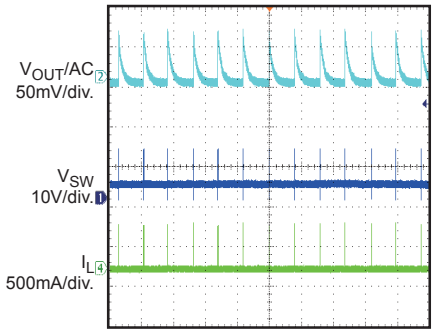

Steady State
I_{OUT}=1mA, AAM Mode

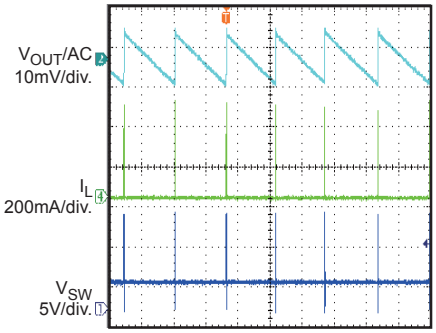

Steady State
I_{OUT}=1A

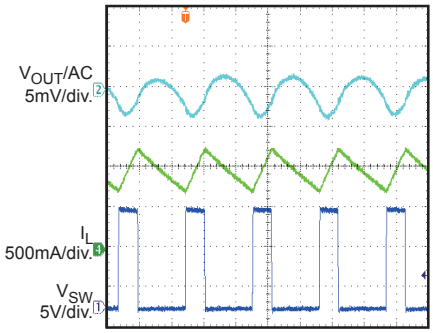

Start-Up through VIN
I_{OUT}=0A

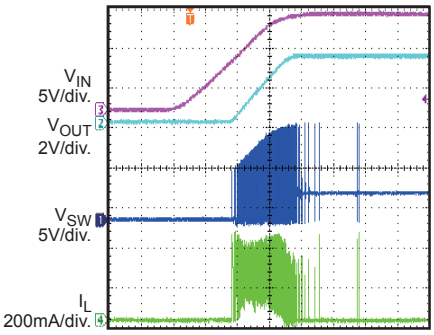

Start-Up through VIN
I_{OUT}=1A

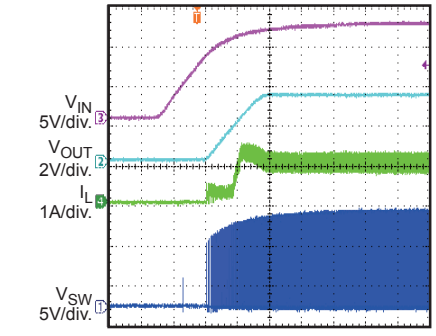

Shutdown through VIN
I_{OUT}=0A

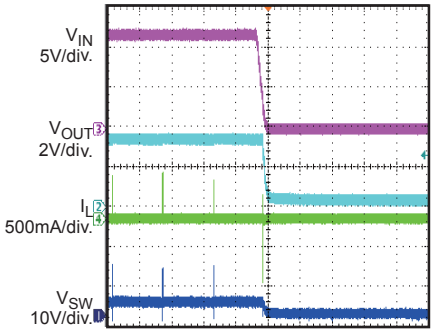

Shutdown through VIN
I_{OUT}=1A

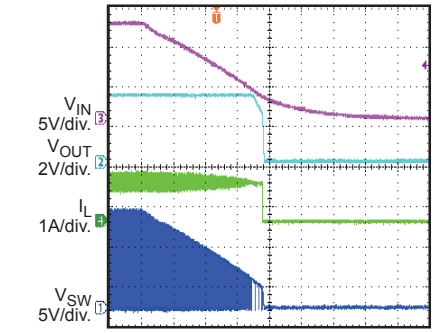

Start-Up through EN
I_{OUT}=0A

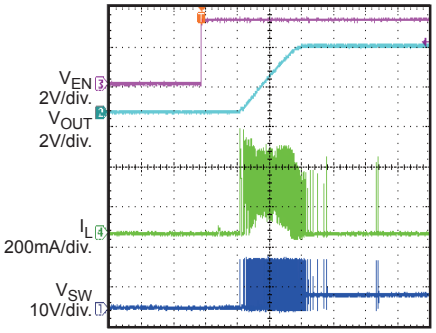

Start-Up through EN
I_{OUT}=1A

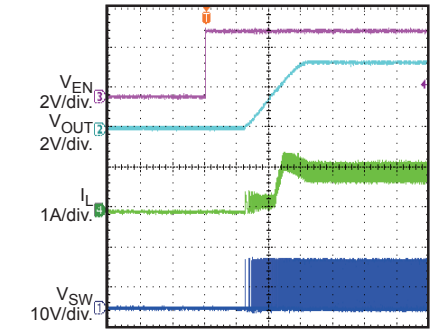

MPS Proprietary Information. Patent Protected. Unauthorized Photocopy and Duplication Prohibited.
© 2019 MPS. All Rights Reserved.

TYPICAL PERFORMANCE CHARACTERISTICS *(continued)*

VIN=12V, V_{OUT}=3.3V, L=10μH, F_{SW}=500kHz, AAM, T_A=+25°C, unless otherwise noted.

Shutdown through EN
I_{OUT}=0A

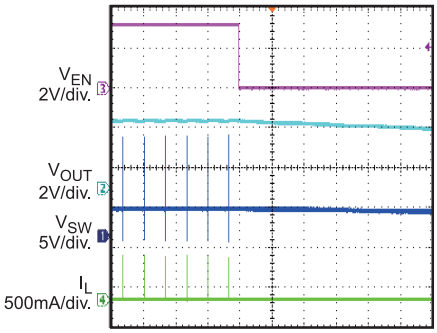

Shutdown through EN
I_{OUT}=1A

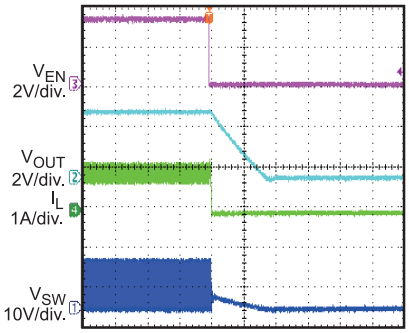

SCP Entry
I_{OUT}=0A to Short Circuit

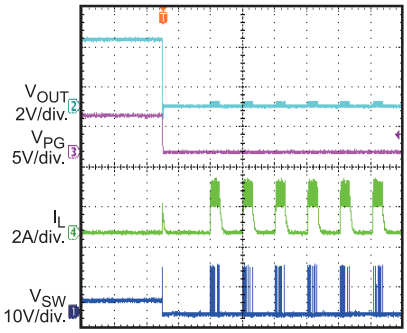

SCP Entry
I_{OUT}=1A to Short Circuit

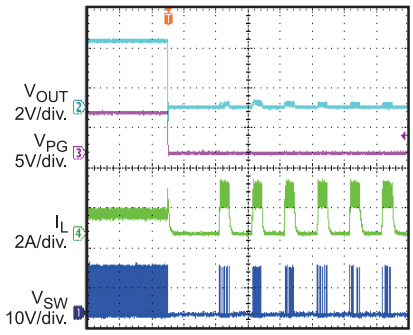

SCP Steady State

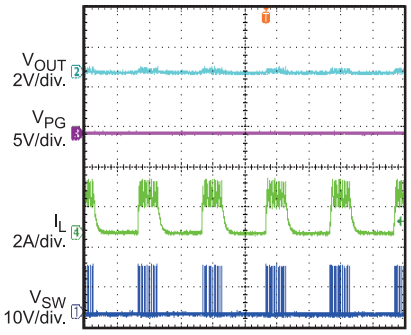

SCP Recovery
Short Circuit to I_{OUT}=0A

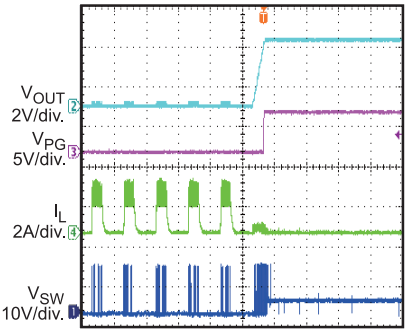

SCP Recovery
Short Circuit to I_{OUT}=1A

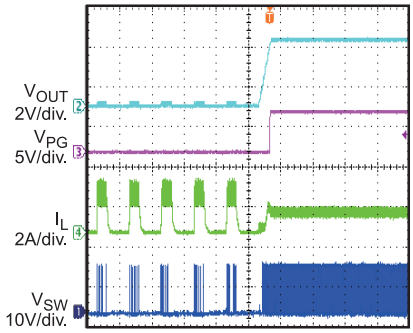

SYNC Operation (In-Phase)
Drive PHASE High, I_{OUT}=1A

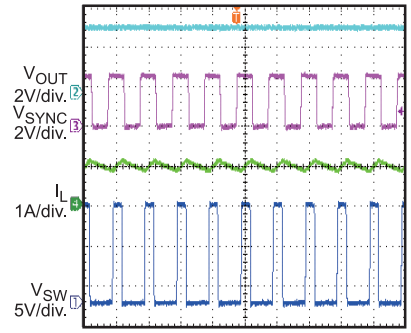

SYNC Operation (180° Out-of-Phase)
Drive PHASE Low, I_{OUT}=1A

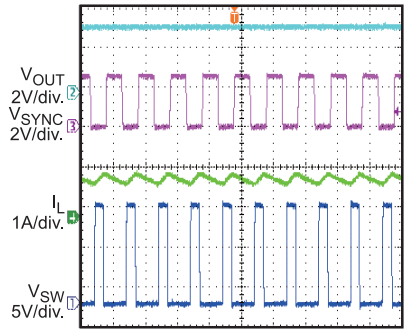

MPS Proprietary Information. Patent Protected. Unauthorized Photocopy and Duplication Prohibited.
© 2019 MPS. All Rights Reserved.

TYPICAL PERFORMANCE CHARACTERISTICS *(continued)*

VIN=12V, V_{OUT}=3.3V, L=10μH, F_{SW}=500kHz, AAM, T_A=+25°C, unless otherwise noted.

Forced CCM Operation

I_{OUT}=0A, Forced CCM Mode

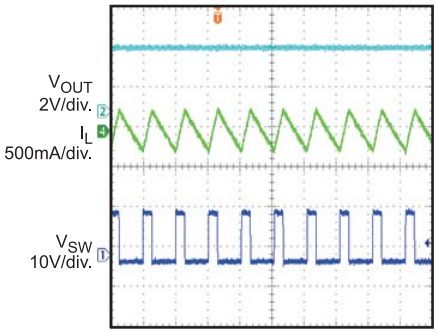

Dropout Operation

V_{IN}=3.3V, V_{OUT} Set to3.3V, I_{OUT}=0A

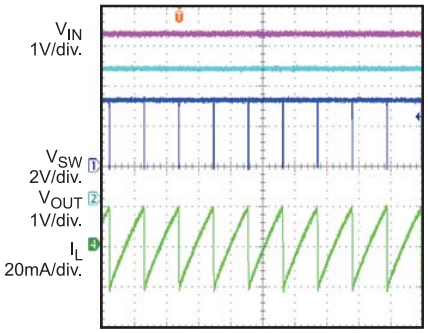

Dropout Operation

V_{IN}=3.3V, V_{OUT} Set to3.3V, I_{OUT}=1A

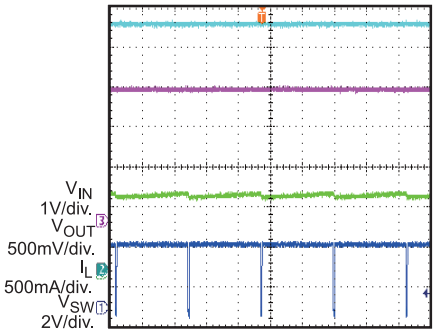

Load Transient

I_{OUT}=0.5A<->1A, 1.6A/μs

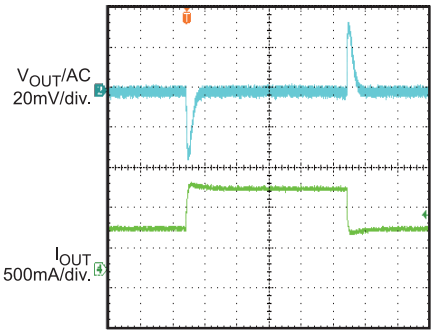

VIN Ramp Up and Down

I_{OUT}=0.1A

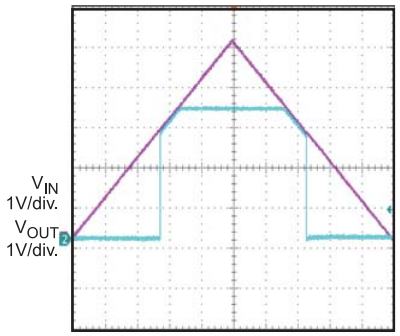

VIN Ramp Down and Up

I_{OUT}=1mA

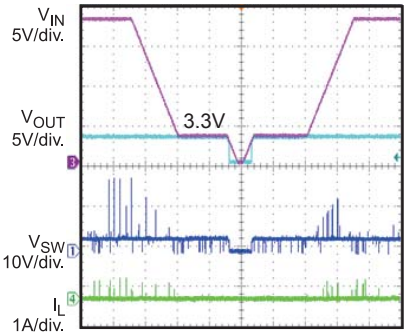

VIN Ramp Down and Up

I_{OUT}=1A

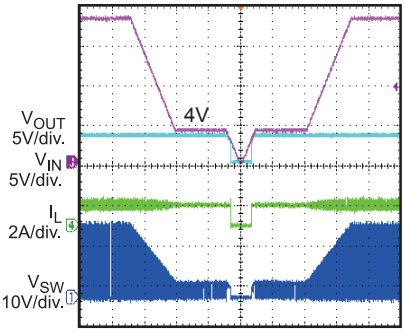

Cold Crank

I_{OUT}=1A

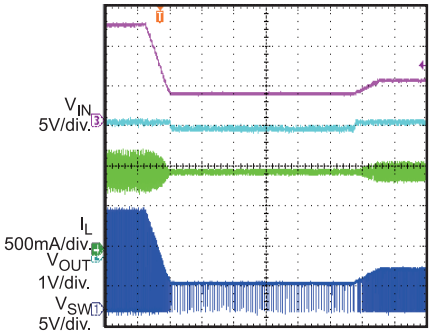

Load Dump

V_{IN}=12V<->36V, I_{OUT}=1A

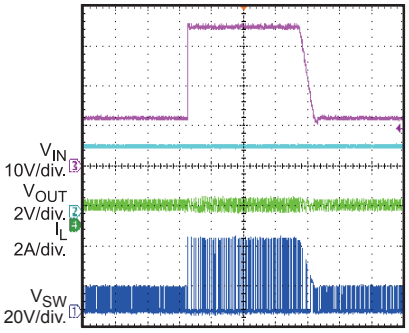

MPS Proprietary Information. Patent Protected. Unauthorized Photocopy and Duplication Prohibited.
© 2019 MPS. All Rights Reserved.

PIN FUNCTIONS

Pin #	Name	Description
1	PHASE	**Selectable in-phase or 180° out-of-phase of SYNC input.** Drive PHASE high to be in-phase. Drive PHASE low to be 180° out-of-phase. Recommend to connect this pin to GND if not used.
2	VIN	**Input supply.** VIN supplies power to all of the internal control circuitries and the power switch connected to SW. A decoupling capacitor to ground must be placed close to VIN to minimize switching spikes.
3, 10	SW	**Switch node.** SW is the output of the internal power switch. Pin 3 and Pin 10 are internally connected.
4, 9	PGND	**Power ground.** PGND is the reference ground of the power device and requires careful consideration during PCB layout. For best results, connect PGND with copper pours and vias.
5	EN	**Enable.** Pull EN below the specified threshold to shut the chip down. Pull EN above the specified threshold to enable the chip.
6	SYNC	**Synchronize.** Apply a 350kHz to 2.5MHz clock signal to SYNC to synchronize the internal oscillator frequency to the external clock. The external clock should be at least 250kHz larger than the R_{FREQ} set frequency. SYNC can also be used to select forced continuous conduction mode (CCM) or advanced asynchronous mode (AAM). Before the chip starts up, drive SYNC low or leave SYNC floating to choose AAM, and drive SYNC high to external power source or pull up SYNC to VCC directly to set the part forced CCM mode.
7	PG	**Power good indicator.** The output of PG is an open drain and goes high if the output voltage is within ±10% of the nominal voltage. Float PG if not used.
8	BIAS	**External power supply for the internal regulator.** Connect BIAS to an external power supply (5V ≤ V_{BIAS} ≤ 18V) to reduce power dissipation and increase efficiency. Float BIAS or connect BIAS to ground if not used.
11	BST	**Bootstrap.** BST is the positive power supply for the high-side MOSFET driver connected to SW. Connect a bypass capacitor between BST and SW.
12	VCC	**Internal bias supply.** VCC supplies power to the internal control circuit and gate drivers. A ≥1μF decoupling capacitor to ground is required close to VCC.
13	AGND	**Analog ground.** AGND is the reference ground of the logic circuit.
14	SS	**Optional external soft-start time setting.** Connect an external capacitor between this pin and GND to set soft-start time externally. The MPQ9841 sources 10μA from SS to the soft-start capacitor during start-up. As the SS voltage rises, the feedback threshold voltage increases to limit inrush current during start-up. Floating the pin will activate the internal 0.7ms soft-start setting.
15	FB / VOUT	**Feedback input for output adjustable version.** Connect FB to the tap of an external resistor divider from the output to AGND to set the output voltage. The feedback threshold voltage is 0.8V. Place the resistor divider as close to FB as possible. Avoid placing vias on the FB traces. **Regulated output voltage for fixed output version.** Connect VOUT pin to the output directly.
16	FREQ	**Switching frequency program.** Connect a resistor from FREQ to ground to set the switching frequency.

MPS Proprietary Information. Patent Protected. Unauthorized Photocopy and Duplication Prohibited.
© 2019 MPS. All Rights Reserved.

BLOCK DIAGRAM

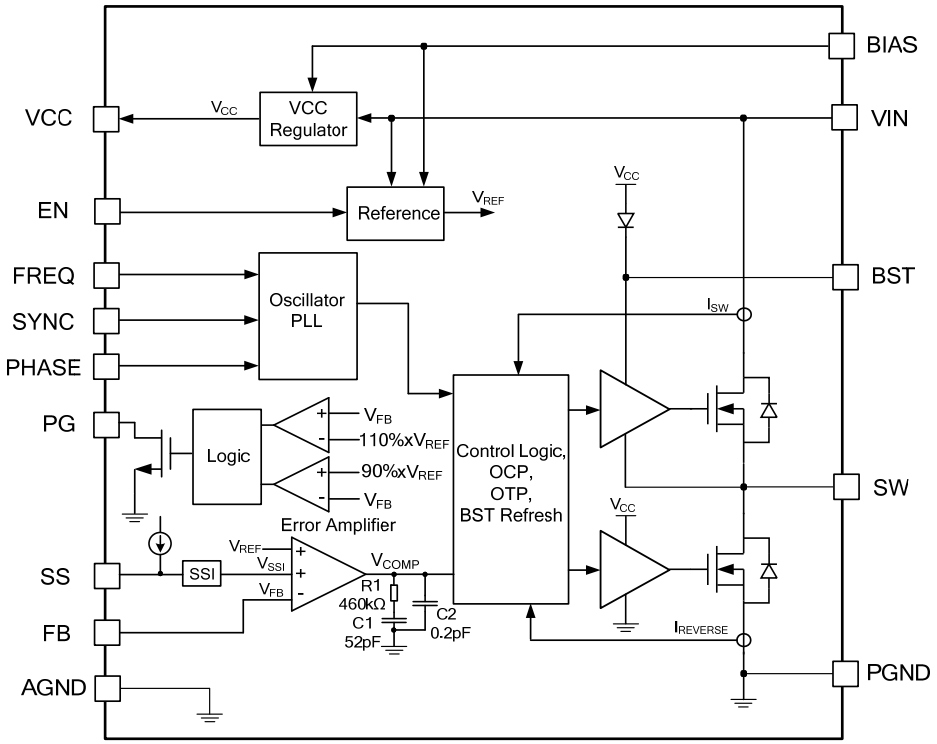

Figure 1-1: Functional Block Diagram of Output Adjustable Version

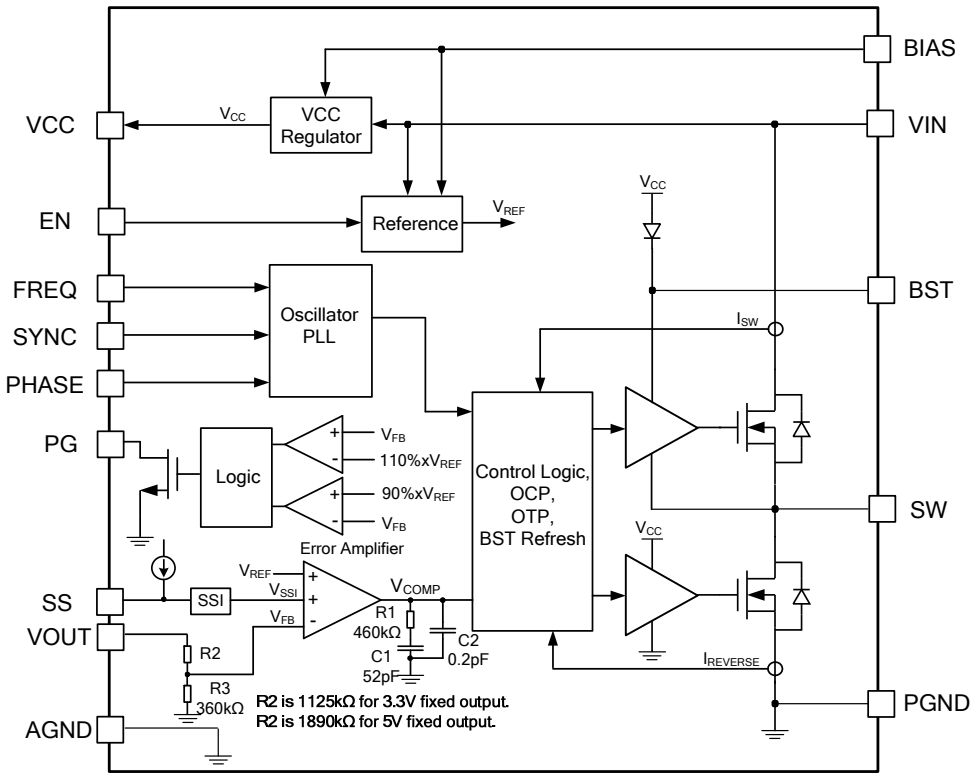

Figure 1-2: Functional Block Diagram of Fixed Output Version

MPS Proprietary Information. Patent Protected. Unauthorized Photocopy and Duplication Prohibited.
© 2019 MPS. All Rights Reserved.

OPERATION

The MPQ9841 is a synchronous, step-down, switching regulator with integrated, internal, high-side and low-side power MOSFETs. The MPQ9841 provides 1A of highly efficient output current with current mode control.

The MPQ9841 features a wide input voltage range, switching frequency programmable from 350kHz to 2.5MHz, external soft start, and precision current limit. Its very low operational quiescent current makes it suitable for battery-powered applications.

Pulse-Width Modulation (PWM) Control

At moderate-to-high output currents, the MPQ9841 operates in a fixed-frequency, peak-current-control mode to regulate the output voltage. A pulse-width modulation (PWM) cycle is initiated by the internal clock. At the rising edge of the clock, the high-side power MOSFET (HS-FET) is turned on and remains on until its current reaches the value set by the COMP voltage (V_{COMP}). If the current in the HS-FET does not reach V_{COMP} in one PWM period, the HS-FET remains on, saving a turn-off operation.

When the high-side power switch is off, the low-side MOSFET (LS-FET) is turned on immediately and remains on until the next cycle begins.

For each turn-on and -off in a switching cycle, the HS-FET turns on and off with a minimum on and off time limit.

Advanced Asynchronous Mode (AAM)

The MPQ9841 employs advanced asynchronous mode (AAM) functionality to optimize efficiency during light-load or no-load conditions. AAM can be enabled by connecting SYNC to a low level (<0.4V) before start-up; CCM can be able when connecting SYNC to a high level (>1.8V) before start-up. SYNC can be used to synchronize switching again after start-up.

If continuous conduction mode (CCM) is enabled, the device is forced to work with a fixed frequency regardless of the output load current. The advantage of CCM is the controllable frequency and smaller output ripple, but it also has low efficiency at light load (see Figure 2).

If AAM is enabled, the MPQ9841 first enters non-synchronous operation for as long as the inductor current is approaching zero at light load. If the load is further decreased or is at no load, V_{COMP} drops below the AAM voltage (V_{AAM}), making the MPQ9841 enter power-save mode (PSM). This puts the chip into sleep mode, which consumes very low quiescent current to further improve light-load efficiency.

In PSM, the internal clock is reset whenever V_{COMP} crosses over V_{AAM}, and the crossover time is taken as the benchmark of the next clock. When the load increases, and the DC value of V_{COMP} is higher than V_{AAM}, the operation mode is discontinuous conduction mode (DCM) or CCM, which have a constant switching frequency.

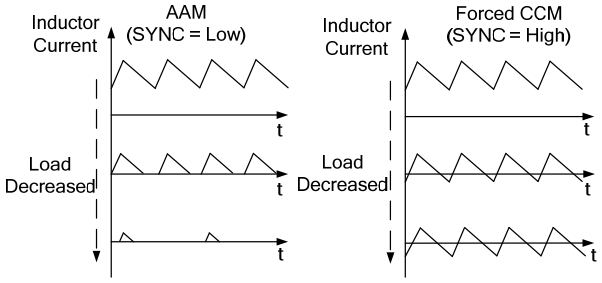

Figure 2 : AAM and Forced CCM

Error Amplifier (EA)

The error amplifier (EA) compares the FB voltage with the internal reference (0.8V) and outputs a current proportional to the difference between the two. This output current is used to charge or discharge the internal compensation network to form V_{COMP}, which is used to control the power MOSFET current. The optimized internal compensation network minimizes the external component count and simplifies the control loop design.

Bootstrap Charging

The bootstrap capacitor (0.1μF to 1μF) is charged and regulated to about 5V by the dedicated internal bootstrap regulator. When the voltage between the BST and SW nodes is lower than its regulation, a PMOS pass transistor connected from VIN to BST is turned on. The charging current path is from VIN to BST to SW. An external circuit should provide

MPS Proprietary Information. Patent Protected. Unauthorized Photocopy and Duplication Prohibited.
© 2019 MPS. All Rights Reserved.

enough voltage headroom to facilitate charging. When the HS-FET is on, VIN is about equal to SW, so the bootstrap capacitor cannot be charged.

At a higher duty cycle operation condition, the time period available to the bootstrap charging is less, so the bootstrap capacitor may not be charged sufficiently. In case the external circuit does not have sufficient voltage or time to charge the bootstrap capacitor, extra external circuitry can be used to ensure that the bootstrap voltage is in the normal operation region.

Low Dropout Operation (BST Refresh)

To improve drop out, the MPQ9841 is designed to operate at close to 100% duty cycle for as long as the BST to SW voltage is greater than 2.5V. When the voltage from BST to SW drops below 2.5V, the HS-FET is turned off using an under-voltage lockout (UVLO) circuit, which allows the LS-FET to conduct and refresh the charge on the BST capacitor. In DCM or PSM, the LS-FET is forced on to refresh the BST voltage.

Since the supply current sourced from the BST capacitor is low, the HS-FET can remain on for more switching cycles than are required to refresh the capacitor, making the effective duty cycle of the switching regulator high.

The effective duty cycle during the dropout of the regulator is mainly influenced by the voltage drops across the power MOSFET, inductor resistance, low-side diode, and printed circuit board resistance.

Internal Regulator

Most of the internal circuitry is powered on by the 5V internal regulator. This regulator takes the VIN input and operates in the full VIN range. When VIN is greater than 5V, the output of the regulator is in full regulation. When VIN is lower than 5V, the output degrades.

For better thermal performance, connect BIAS to an external 5V source. VCC and the internal circuit are powered by BIAS. Since there is an internal diode between BIAS and the internal circuit, float BIAS or connect BIAS to GND if it is not being used.

Enable Control (EN)

EN is a digital control pin that turns the regulator on and off. When EN is pulled below its threshold voltage, the chip is put into the lowest shutdown current mode. Pulling EN above its threshold voltage turns on the part. Do not float EN.

Frequency Programmable (FREQ)

The MPQ9841 oscillating frequency can be programmed either by an external resistor (R_{FREQ}) from FREQ to ground or by a logic level SYNC signal. The value of (R_{FREQ}) can be calculated with Equation (1):

$$R_{FREQ}(k\Omega) = \frac{170000}{f_s^{1.11}(kHz)} \quad (1)$$

The chip can be synchronized to an external clock ranging from 350kHz up to 2.5MHz through FREQ/SYNC.

SYNC and PHASE

The internal oscillator frequency can be synchronized to an external clock ranging from 350kHz up to 2.5MHz through SYNC. The external clock should be at least 250kHz larger than the R_{FREQ} set frequency. Ensure that the high amplitude of the SYNC clock is higher than 1.8V, and the low amplitude is lower than 0.4V. There is no pulse width requirement, but there is always parasitic capacitance of the pad, so if the pulse width is too short, a clear rising and falling edge may not be seen due to the parasitic capacitance. A pulse longer than 100ns is recommended in application.

PHASE is used when two or more MPQ9841 devices are in parallel with the same SYNC clock. Pulling PHASE high forces the MPQ9841 to operate in-phase of the SYNC clock. Pulling PHASE low forces the device to be 180° out-of-phase of the SYNC clock. By setting different voltages for PHASE, two devices can operate 180° out-of-phase to reduce the total input current ripple, so a smaller input bypass capacitor can be used (see Figure 3). The PHASE rising threshold is about 2.5V with a 400mV hysteresis.

MPS Proprietary Information. Patent Protected. Unauthorized Photocopy and Duplication Prohibited.
© 2019 MPS. All Rights Reserved.

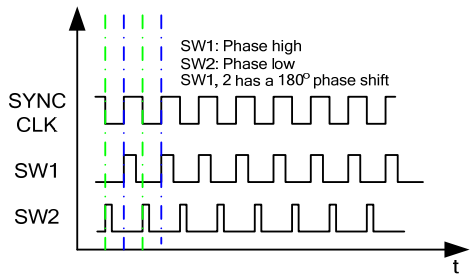

Figure 3: In-Phase and 180° Out-of-Phase

Soft Start (SS)

Soft start (SS) is implemented to prevent the converter output voltage from overshooting during start-up. When the chip starts up, an internal current source begins charging the external soft-start capacitor. The internal SS voltage (V_{SSI}) rises with the soft-start voltage (V_{SS}), but V_{SSI} is a little different with V_{SS} due to a 0.5V offset and some delay. When V_{SS} is lower than 0.5V, V_{SSI} is 0V. V_{SSI} rises from 0V to 0.8V during the period of V_{SS} rising from 0.5V to 1.6V. At this time the error amplifier uses V_{SSI} as the reference, so the output voltage ramps up from 0V to the regulated value following V_{SSI} rising. When V_{SS} reaches 1.6V, V_{SSI} is 0.8V and overrides the internal V_{REF}, so the error amplifier uses the internal V_{REF} as the reference.

The soft-start time (t_{SS}) set by the external SS capacitor can be calculated with Equation (2):

$$t_{SS}(ms) = \frac{C_{SS}(nF) \times 1.1V}{I_{SS}(\mu A)} \quad (2)$$

Where C_{SS} is the external SS capacitor, and I_{SS} is the internal 10μA SS charge current.

There is also an internal fixed 700us soft start. The final SS time is determined by the longer time between 700us and the external SS setting time.

SS can be used for tracking and sequencing.

Pre-Bias Start-Up

At start-up, if V_{FB} is higher than V_{SSI}-150mV, which means the output has a pre-bias voltage, neither the HS-FET nor the LS-FET are turned on until V_{SSI}-150mV is higher than V_{FB}.

Thermal Shutdown

Thermal shutdown is implemented to prevent the chip from running away thermally. When the silicon die temperature is higher than its upper threshold, the power MOSFETs are shut down. When the temperature is lower than its lower threshold, thermal shutdown is removed and the chip is enabled again.

Current Comparator and Current Limit

The power MOSFET current is accurately sensed via a current sense MOSFET. The current is then fed to the high-speed current comparator for current-mode control purposes. The current comparator takes this sensed current as one of its inputs. When the HS-FET is turned on, the comparator is first blanked until the end of the turn-on transition to avoid noise. Then the comparator compares the power switch current with V_{COMP}. When the sensed current is higher than V_{COMP}, the comparator outputs low to turn off the HS-FET. The maximum current of the internal power MOSFET is limited cycle-by-cycle internally.

Hiccup Protection

When the output is shorted to ground, causing the output voltage to drop below 55% of its nominal output, the IC is shut down momentarily and begins discharging the soft-start capacitor. The IC restarts with a full soft start when the soft-start capacitor is fully discharged. This hiccup process is repeated until the fault is removed.

Start-Up and Shutdown

If both VIN and EN are higher than their appropriate thresholds, the chip starts up. The reference block starts first, generating a stable reference voltage and current, and then the internal regulator is enabled. The regulator provides a stable supply for the rest of the circuitries.

While the internal supply rail is up, an internal timer holds the power MOSFET off for about 50μs to blank any start-up glitches. When the soft-start block is enabled, the SS output is held low to ensure that the rest of the circuitries are ready before slowly ramping up.

Three events can shut down the chip: EN low, VIN low, and thermal shutdown. In the shutdown procedure, the signaling path is blocked first to avoid any fault triggering. V_{COMP} and the internal supply rail are then pulled down.

MPS Proprietary Information. Patent Protected. Unauthorized Photocopy and Duplication Prohibited.
© 2019 MPS. All Rights Reserved.

The floating driver is not subject to this shutdown command, but its charging path is disabled.

Power Good (PG) Output

The MPQ9841 includes an open-drain power good (PG) output that indicates whether the regulator output is within ±10% of its nominal output range. When the output voltage moves outside of this range, the PG output is pulled to ground.

MPS Proprietary Information. Patent Protected. Unauthorized Photocopy and Duplication Prohibited.
© 2019 MPS. All Rights Reserved.

APPLICATION INFORMATION

Setting the Output Voltage

The external resistor divider connected to FB sets the output voltage (see Figure 4).

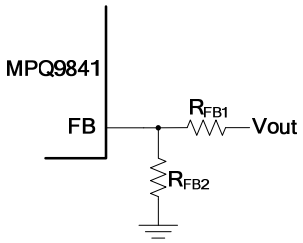

Figure 4: Feedback Network

Choose R_{FB1} first, R_{FB2} can then be calculated with Equation (3):

$$R_{FB2} = \frac{R_{FB1}}{\frac{V_{OUT}}{0.8V} - 1} \quad (3)$$

Table 1 lists the recommended feedback resistor values for common output voltages.

Table 1: Resistor Selection for Common Output Voltages

V_{OUT} (V)	R_{FB1} (kΩ)	R_{FB2} (kΩ)
3.3	41.2 (1%)	13 (1%)
5	68.1 (1%)	13 (1%)

For fixed output version, connect VOUT pin to the output directly.

Selecting the Inductor

A 1μH to 10μH inductor with a DC current rating at least 25% higher than the maximum load current is recommended for most applications. For higher efficiency, choose an inductor with a lower DC resistance. A larger-value inductor results in less ripple current and a lower output ripple voltage, but also has a larger physical size, higher series resistance, and lower saturation current. A good rule for determining the inductor value is to allow the inductor ripple current to be approximately 30% of the maximum load current. The inductance value can then be calculated with Equation (4):

$$L = \frac{V_{OUT}}{f_{SW} \times \Delta I_L} \times (1 - \frac{V_{OUT}}{V_{IN}}) \quad (4)$$

Where ΔI_L is the peak-to-peak inductor ripple current.

Choose the inductor ripple current to be approximately 30% of the maximum load current. The maximum inductor peak current can be calculated with Equation (5):

$$I_{LP} = I_{LOAD} + \frac{V_{OUT}}{2f_{SW} \times L} \times (1 - \frac{V_{OUT}}{V_{IN}}) \quad (5)$$

Selecting the Input Capacitor

The input current to the step-down converter is discontinuous and therefore requires a capacitor to supply AC current to the converter while maintaining the DC input voltage. For the best performance, use low ESR capacitors. Ceramic capacitors with X5R or X7R dielectrics are highly recommended because of their low ESR and small temperature coefficients.

For most application, use a 4.7μF to 10μF capacitor. It is strongly recommended to use another lower-value capacitor (e.g.: 0.1μF) with a small package size (0603) to absorb high-frequency switching noise. Place the smaller capacitor as close to VIN and GND as possible.

Since C_{IN} absorbs the input switching current, it requires an adequate ripple current rating. The RMS current in the input capacitor can be estimated with Equation (6):

$$I_{CIN} = I_{LOAD} \times \sqrt{\frac{V_{OUT}}{V_{IN}} \times (1 - \frac{V_{OUT}}{V_{IN}})} \quad (6)$$

The worst-case condition occurs at VIN = $2V_{OUT}$, shown in Equation (7):

$$I_{CIN} = \frac{I_{LOAD}}{2} \quad (7)$$

For simplification, choose an input capacitor with an RMS current rating greater than half of the maximum load current.

The input capacitor can be electrolytic, tantalum, or ceramic. When using electrolytic or tantalum capacitors, add a small, high-quality ceramic capacitor (e.g.: 0.1μF) as close to the IC as possible. When using ceramic capacitors, ensure that they have enough capacitance to provide a sufficient charge to prevent excessive voltage ripple at the input.

MPS Proprietary Information. Patent Protected. Unauthorized Photocopy and Duplication Prohibited.
© 2019 MPS. All Rights Reserved.

The input voltage ripple caused by the capacitance can be estimated with Equation (8):

$$\Delta V_{IN} = \frac{I_{LOAD}}{f_{SW} \times C_{IN}} \times \frac{V_{OUT}}{V_{IN}} \times (1 - \frac{V_{OUT}}{V_{IN}}) \quad (8)$$

Selecting the Output Capacitor

The output capacitor maintains the DC output voltage. Ceramic, tantalum, or low ESR electrolytic capacitors are recommended. For best results, use low ESR capacitors to keep the output voltage ripple low. The output voltage ripple can be estimated with Equation (9):

$$\Delta V_{OUT} = \frac{V_{OUT}}{f_{SW} \times L} \cdot (1 - \frac{V_{OUT}}{V_{IN}}) \cdot (R_{ESR} + \frac{1}{8 f_{SW} \times C_{OUT}}) \quad (9)$$

Where L is the inductor value, and R_{ESR} is the equivalent series resistance (ESR) value of the output capacitor.

For ceramic capacitors, the capacitance dominates the impedance at the switching frequency and causes the majority of the output voltage ripple. For simplification, the output voltage ripple can be estimated with Equation (10):

$$\Delta V_{OUT} = \frac{V_{OUT}}{8 \times f_{SW}^2 \times L \times C_{OUT}} \times (1 - \frac{V_{OUT}}{V_{IN}}) \quad (10)$$

For tantalum or electrolytic capacitors, the ESR dominates the impedance at the switching frequency. For simplification, the output ripple can be approximated with Equation (11):

$$\Delta V_{OUT} = \frac{V_{OUT}}{f_{SW} \times L} \times (1 - \frac{V_{OUT}}{V_{IN}}) \times R_{ESR} \quad (11)$$

The characteristics of the output capacitor also affect the stability of the regulation system. The MPQ9841 can be optimized for a wide range of capacitance and ESR values.

VIN UVLO Setting

The MPQ9841 has an internal, fixed, UVLO threshold. The rising threshold is 2.8V, while the falling threshold is about 2.65V. For applications that require a higher UVLO point, an external resistor divider between VIN and EN can be used to achieve a higher equivalent UVLO threshold (see Figure 5).

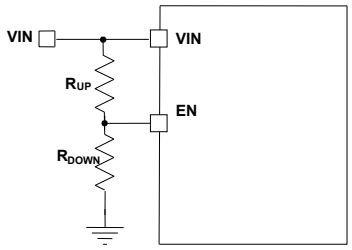

Figure 5: Adjustable UVLO Using EN Divider

The UVLO threshold can be calculated with Equation (12) and Equation (13):

$$INUV_{RISING} = (1 + \frac{R_{UP}}{R_{DOWN}}) \times V_{EN_RISING} \quad (12)$$

$$INUV_{FALLING} = (1 + \frac{R_{UP}}{R_{DOWN}}) \times V_{EN_FALLING} \quad (13)$$

Where V_{EN_RISING} is 1.05V, and $V_{EN_FALLING}$ is 0.93V.

External BST Diode and Resistor

An external BST diode can enhance the efficiency of the regulator when the duty cycle is high. A power supply between 2.5V and 5V can be used to power the external bootstrap diode. VCC or V_{OUT} is recommended to be the power supply in the circuit (see Figure 6).

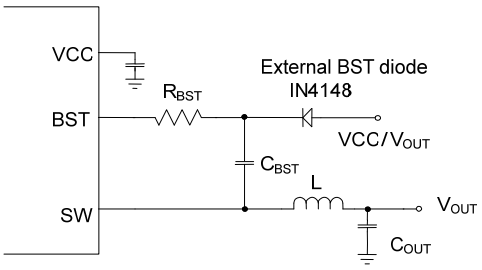

Figure 6: External Bootstrap Diode and Resistor

The recommended external BST diode is IN4148, and the recommended BST capacitor value is 0.1μF to 1μF.

A resistor in series with the BST capacitor (R_{BST}) can reduce the SW rising rate and voltage spikes. This helps enhance EMI performance and reduce voltage stress at a high VIN. A higher resistance is better for SW spike reduction but compromises efficiency. To make a tradeoff between EMI and efficiency, a ≤20Ω R_{BST} is recommended.

MPS Proprietary Information. Patent Protected. Unauthorized Photocopy and Duplication Prohibited.
© 2019 MPS. All Rights Reserved.

PCB Layout Guidelines [8]

Efficient PCB layout is critical for stable operation, especially for the input capacitor placement. A four-layer layout is strongly recommended to achieve better thermal performance. For best results, refer to Figure 7 and follow the guidelines below.

1. Use a large ground plane to connect directly to PGND. Recommend to connect pin1 to GND for symmetric input structure if in-phase not used. Pin3 and pin10 are internally connected. Connecting together on layout or not are both OK. Recommend to leave pin3 floating for shorter pin4 and pin1 trace and smaller input hot loop.
2. Add vias near PGND if the bottom layer is a ground plane.
3. Ensure that the high-current paths at GND and VIN have short, direct, and wide traces.
4. Place the ceramic input capacitors, especially the small package size (0603) input bypass capacitor, as close to VIN and PGND as possible to minimize high-frequency noise.
5. Keep the connection of the input capacitor and VIN as short and wide as possible.
6. Place the VCC capacitor as close to VCC and GND as possible.
7. Route SW and BST away from sensitive analog areas such as FB.
8. Place the feedback resistors close to the chip to ensure that the trace connecting to FB is as short as possible.
9. Use multiple vias to connect the power planes to the internal layers.

NOTE:
8) The recommended PCB layout is based on Figure 8.

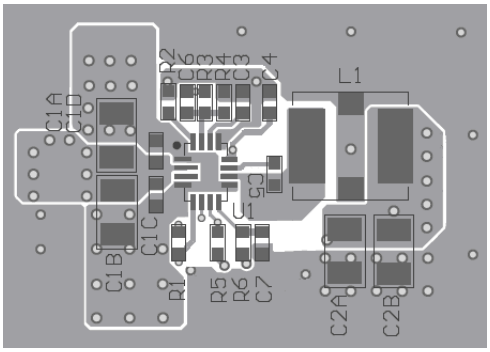

Top Layer

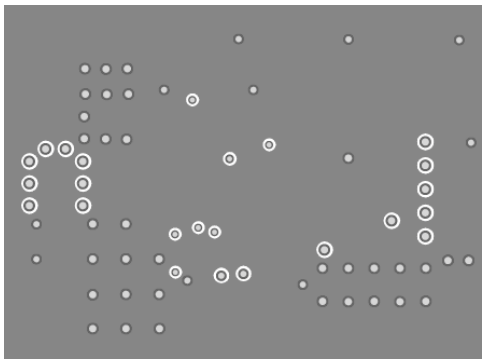

Inner Layer 1

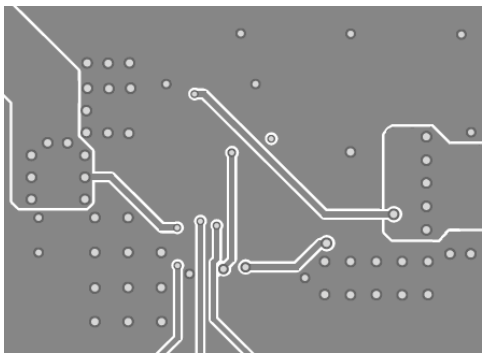

Inner Layer 2

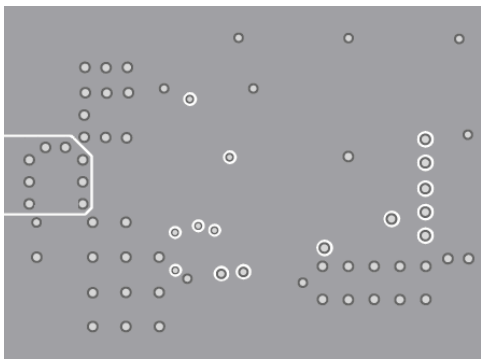

Bottom Layer

Figure 7: Recommended PCB Layout

MPS Proprietary Information. Patent Protected. Unauthorized Photocopy and Duplication Prohibited.
© 2019 MPS. All Rights Reserved.

TYPICAL APPLICATION CIRCUITS

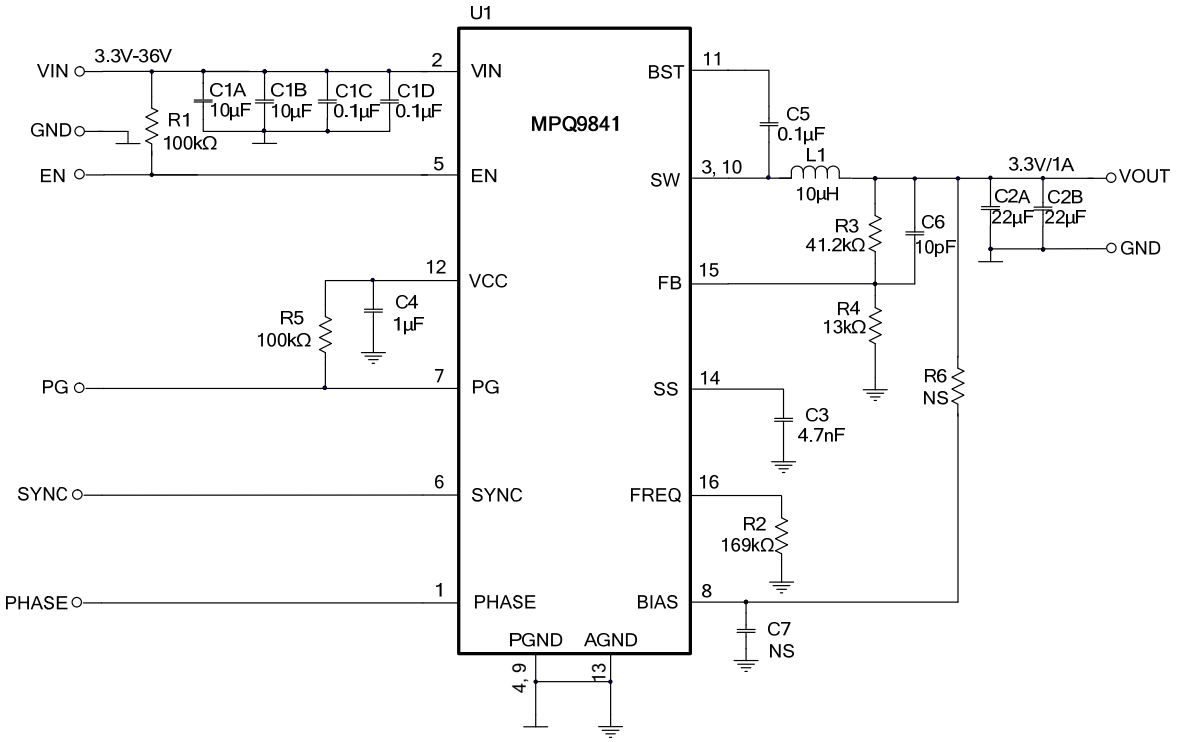

Figure 8: V_{OUT} = 3.3V, F_{SW} = 500kHz

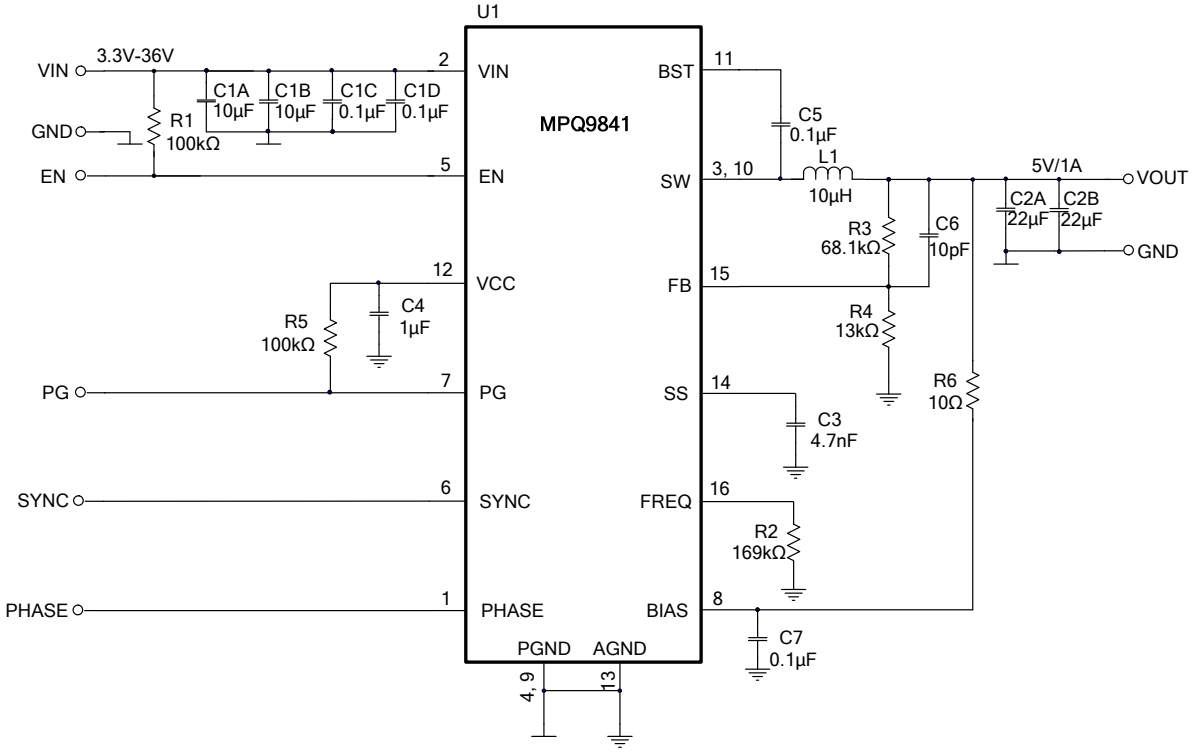

Figure 9: V_{OUT} = 5V, F_{SW} = 500kHz

MPS Proprietary Information. Patent Protected. Unauthorized Photocopy and Duplication Prohibited.
© 2019 MPS. All Rights Reserved.

TYPICAL APPLICATION CIRCUITS *(continued)*

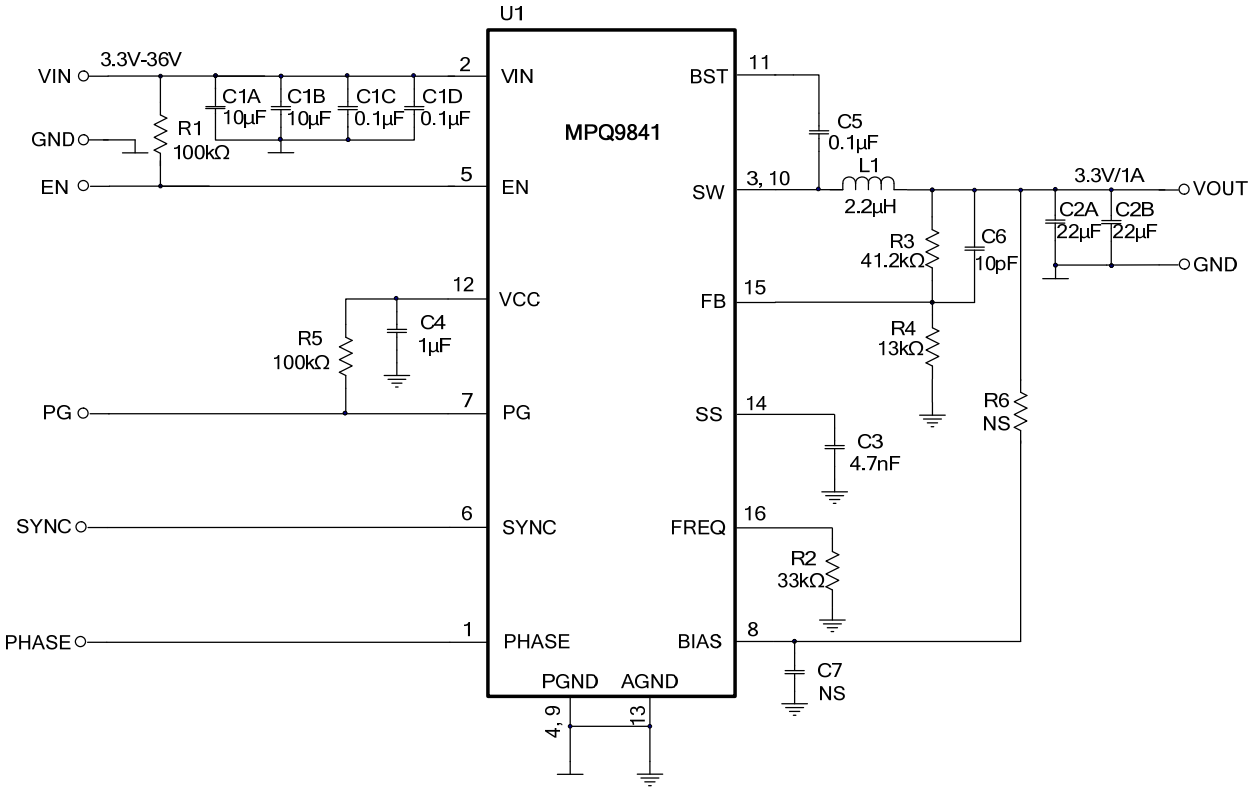

Figure 10: V_{OUT} = 3.3V, F_{SW} = 2.2MHz

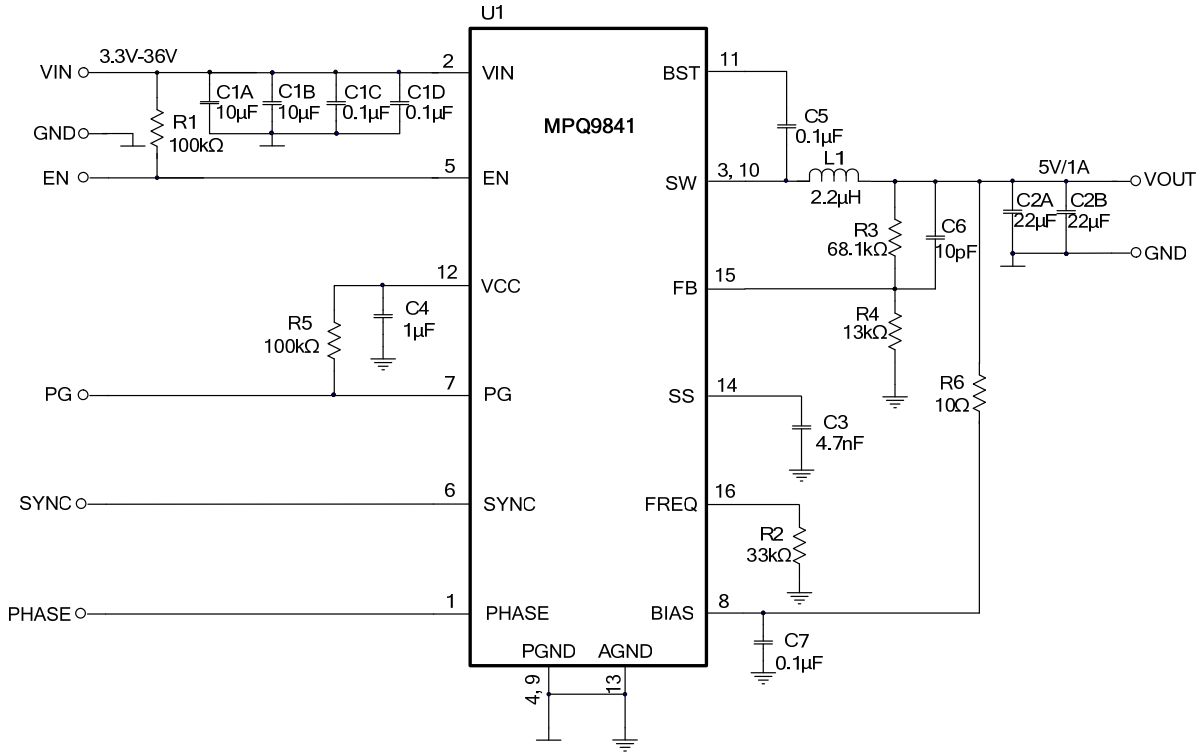

Figure 11: V_{OUT} = 5V, F_{SW} = 2.2MHz

MPS Proprietary Information. Patent Protected. Unauthorized Photocopy and Duplication Prohibited.
© 2019 MPS. All Rights Reserved.

TYPICAL APPLICATION CIRCUITS *(continued)*

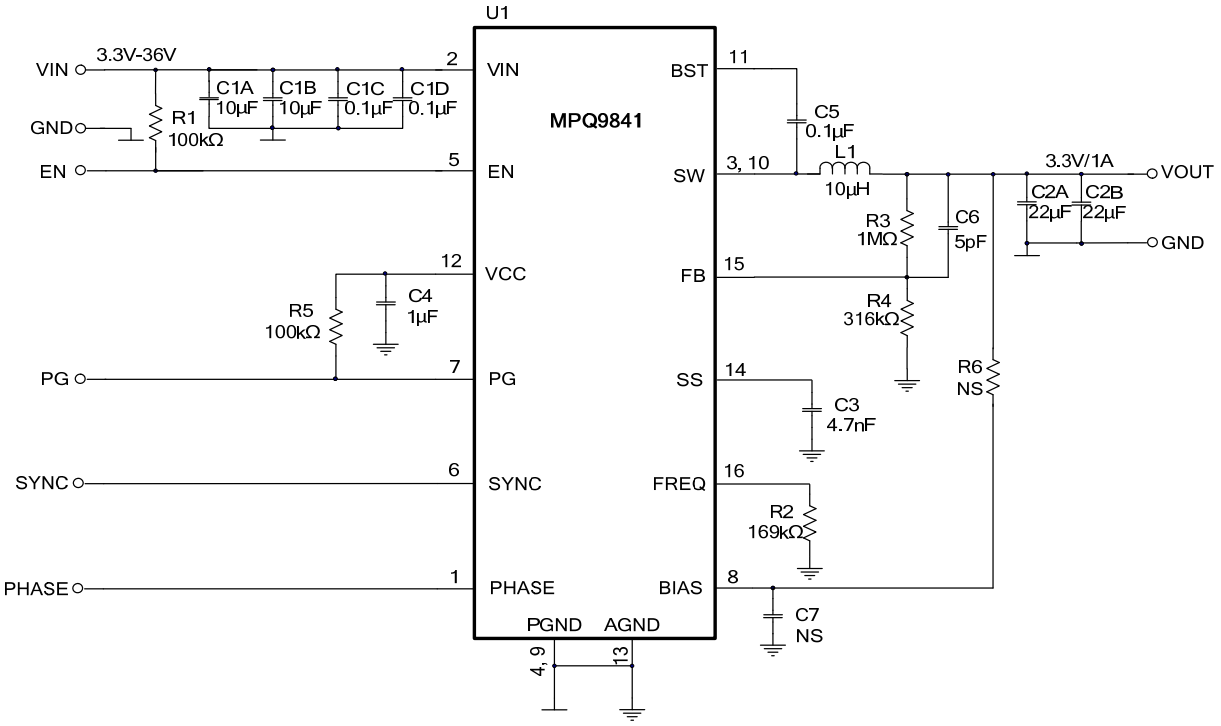

Figure 12: V_{OUT} = 3.3V, F_{SW} = 500kHz for Big FB Resistor Divider Application

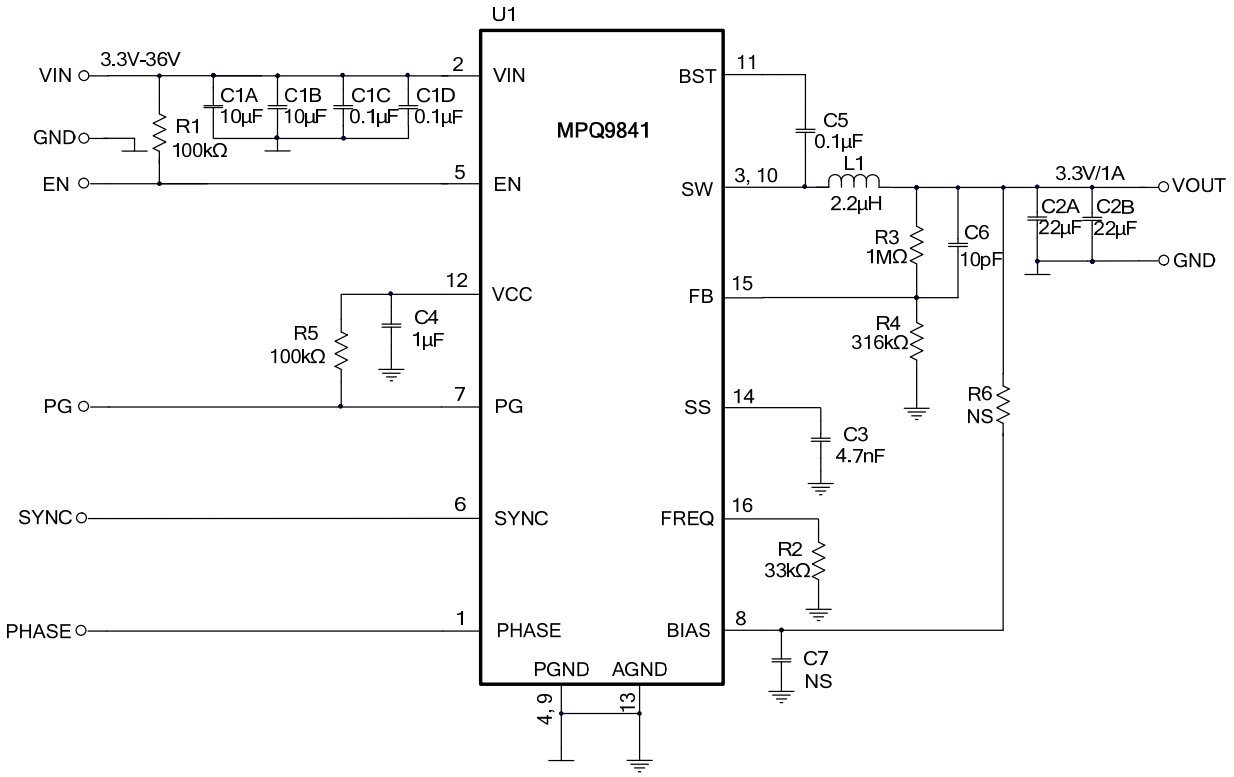

Figure 13: V_{OUT} = 3.3V, F_{SW} = 2.2MHz for Big FB Resistor Divider Application

MPS Proprietary Information. Patent Protected. Unauthorized Photocopy and Duplication Prohibited.
© 2019 MPS. All Rights Reserved.

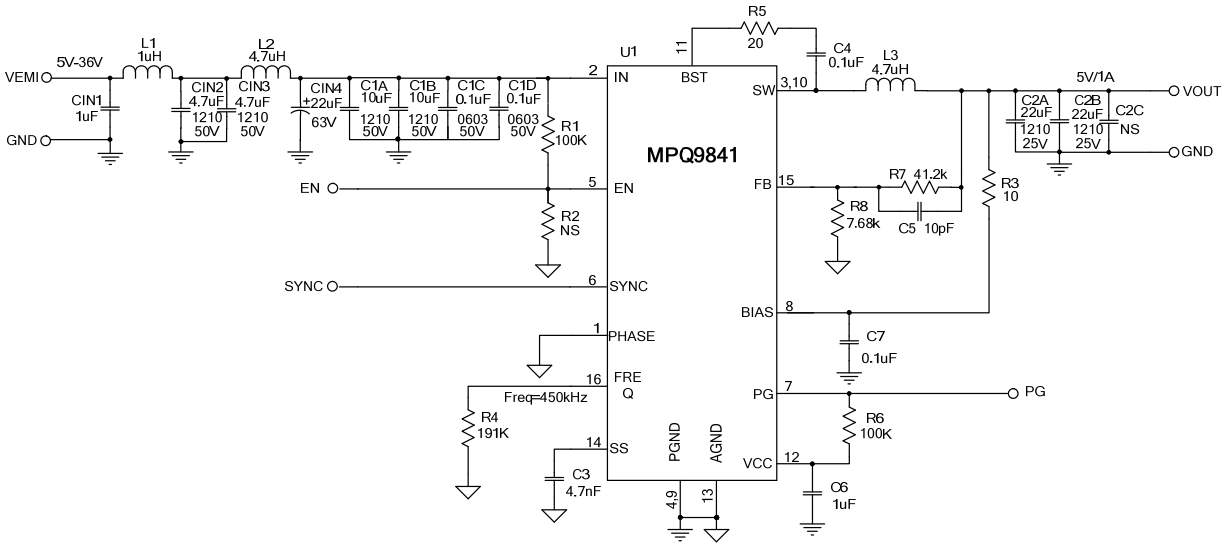

Figure 14: Application Circuit with EMI Filter @V_{OUT} = 5V/1A, F_{SW} = 450kHz

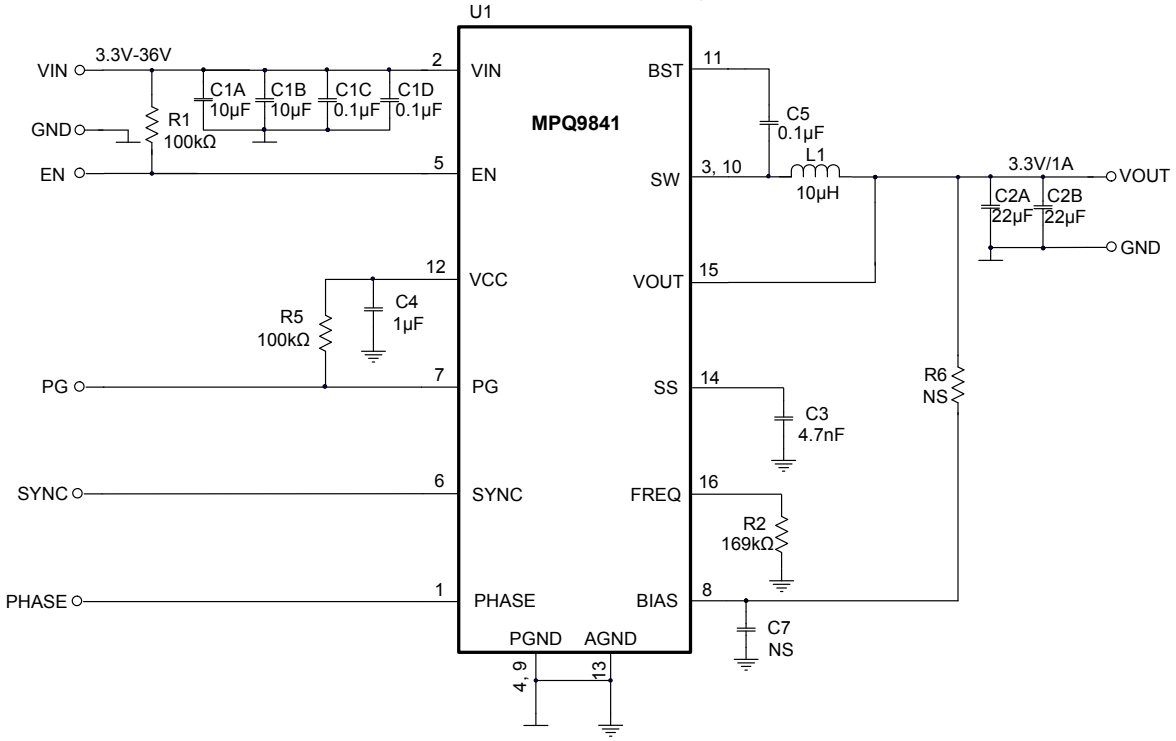

Figure 15: 3.3V Fixed Output, F_{SW} = 500kHz

MPS Proprietary Information. Patent Protected. Unauthorized Photocopy and Duplication Prohibited.
© 2019 MPS. All Rights Reserved.

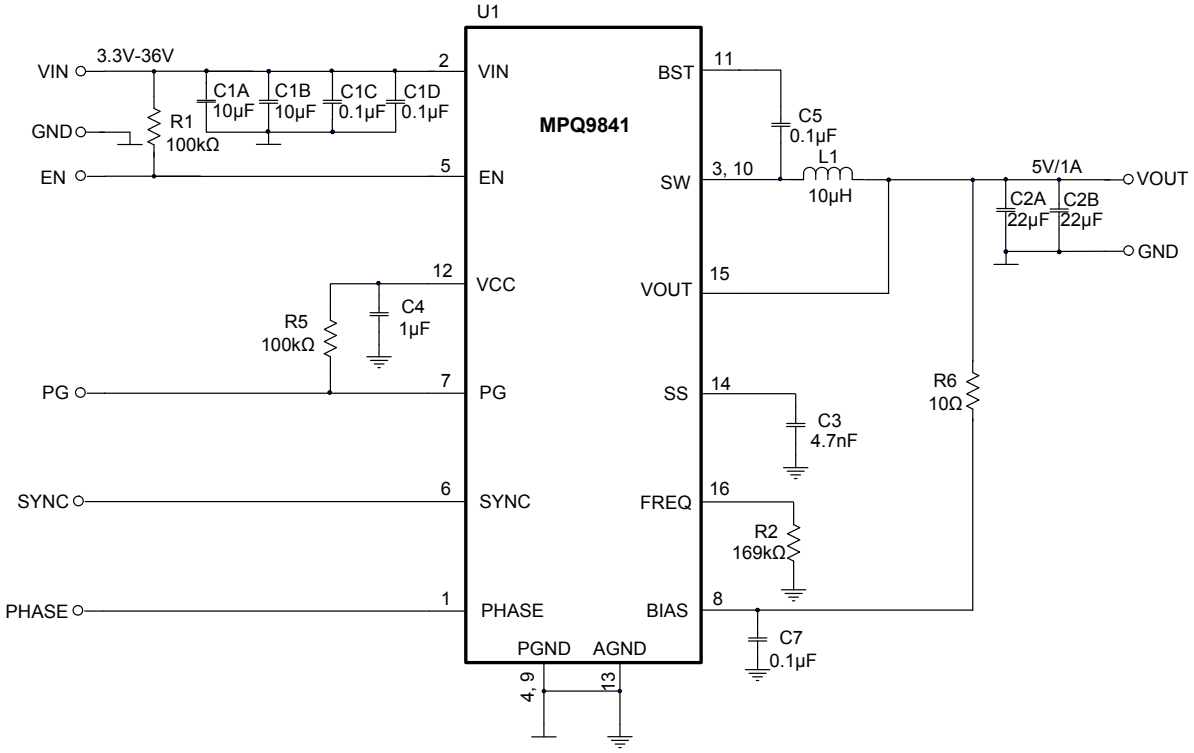

Figure 16: 5V Fixed Output, F_{SW} = 500kHz

MPS Proprietary Information. Patent Protected. Unauthorized Photocopy and Duplication Prohibited.
© 2019 MPS. All Rights Reserved.

PACKAGE INFORMATION

QFN-16 (3mmx4mm)
Non-Wettable Flank

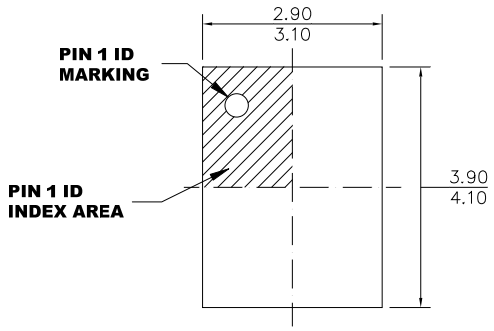

TOP VIEW

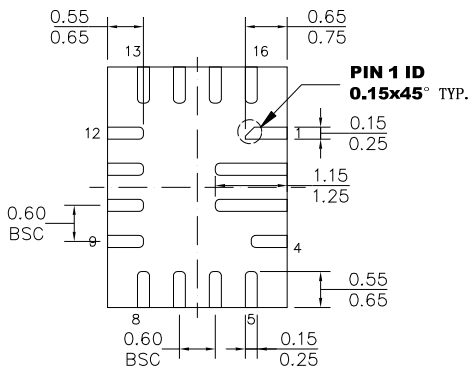

BOTTOM VIEW

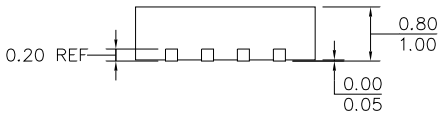

SIDE VIEW

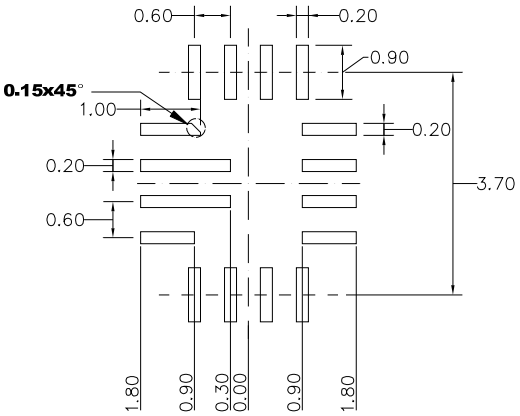

RECOMMENDED LAND PATTERN

NOTE:

1) ALL DIMENSIONS ARE IN MILLIMETERS.
2) LEAD COPLANARITY SHALL BE 0.10 MILLIMETERS MAX.
3) JEDEC REFERENCE IS MO-220.
4) DRAWING IS NOT TO SCALE.

MPS Proprietary Information. Patent Protected. Unauthorized Photocopy and Duplication Prohibited.
© 2019 MPS. All Rights Reserved.

PACKAGE INFORMATION *(continued)*

QFN-16 (3mmx4mm)
Wettable Flank

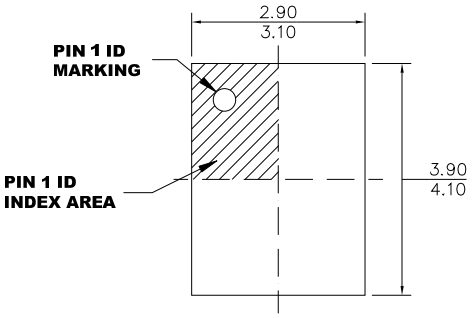

TOP VIEW

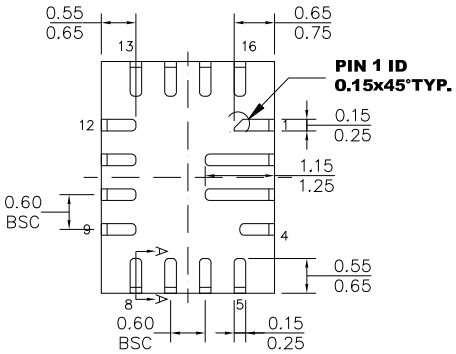

BOTTOM VIEW

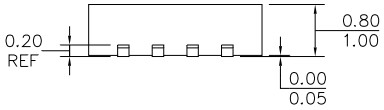

SIDE VIEW

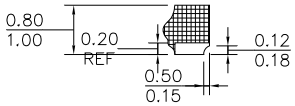

SECTION A-A

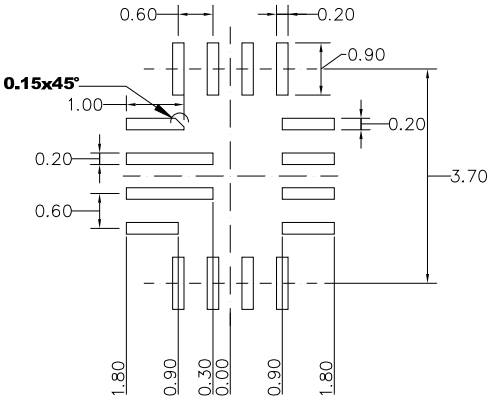

RECOMMENDED LAND PATTERN

NOTE:

1) THE LEAD SIDE IS WETTABLE.
2) ALL DIMENSIONS ARE IN MILLIMETERS.
3) LEAD COPLANARITY SHALL BE 0.08 MILLIMETERS MAX.
4) JEDEC REFERENCE IS MO-220.
5) DRAWING IS NOT TO SCALE.

NOTICE: The information in this document is subject to change without notice. Users should warrant and guarantee that third party Intellectual Property rights are not infringed upon when integrating MPS products into any application. MPS will not assume any legal responsibility for any said applications.

MPS Proprietary Information. Patent Protected. Unauthorized Photocopy and Duplication Prohibited.
© 2019 MPS. All Rights Reserved.