MPQ2029

40V, 450mA, Low-Quiescent Current, Adjustable Output Linear Regulator AEC-Q100 Qualified

The Future of Analog IC Technology®

DESCRIPTION

The MPQ2029 is a low-power linear regulator that supplies power to systems with high-voltage batteries. The MPQ2029 includes a wide 3V to 40V input range, low dropout voltage, and low quiescent supply current. The low quiescent current and low dropout voltage allow for operations at extremely low power levels, making the MPQ2029 ideal for low-power microcontrollers and battery-powered equipment.

The MPQ2029 provides an adjustable output range of 1.25V to 15V.

The regulator output current is limited internally, and the device is protected against short-circuit, overload, and over-temperature conditions.

Full protection features include thermal shutdown, and current-limiting fault protection.

The MPQ2029 is available in a SOIC8 EP package.

FEATURES

- Guaranteed Industrial and Automotive Temperature
- 3V to 40V Input Range
- 10µA Quiescent Supply Current
- Stable with Low-Value Output Ceramic Capacitor (>0.47µF)
- 450mA Specified Current
- Adjustable Output (1.25V to 15V)
- Output ±2% Accuracy Over-Temperature
- Specified Current Limit
- Power Good (PG)
- Programmable Power Good Delay
- Thermal Shutdown and Short-Circuit Protection (SCP)
- -40°C to +150°C Specified Junction Temperature Range
- Available in a SOIC8 EP Package
- Available in AEC-Q100 Grade 1

APPLICATIONS

- Industrial/Automotive Applications
- Portable/Battery-Powered Equipment
- Ultra Low-Power Microcontrollers
- Cellular Handsets
- Medical Imaging

All MPS parts are lead-free, halogen-free, and adhere to the RoHS directive. For MPS green status, please visit the MPS website under Quality Assurance. "MPS" and "The Future of Analog IC Technology" are registered trademarks of Monolithic Power Systems, Inc.

TYPICAL APPLICATION

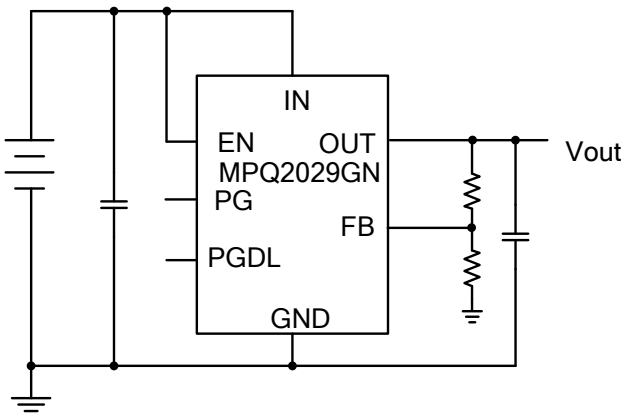

MPS Proprietary Information. Patent Protected. Unauthorized Photocopy and Duplication Prohibited.
© 2017 MPS. All Rights Reserved.

ORDERING INFORMATION

Part Number*	Package	Top Marking
MPQ2029GN	SOIC8 EP	*See Below*
MPQ2029GN-AEC1	SOIC8 EP	

* For Tape & Reel, add suffix –Z (e.g. MPQ2029GN–Z)

TOP MARKING

MP2029
LLLLLLLL
MPSYWW

MP2029: Product code of MPQ2029GN
LLLLLLLL: Lot number
MPS: MPS prefix
Y: Year code
WW: Week code

PACKAGE REFERENCE

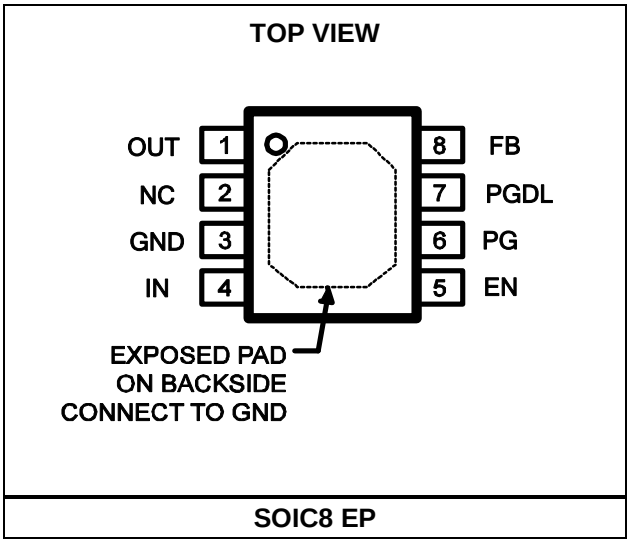

MPS Proprietary Information. Patent Protected. Unauthorized Photocopy and Duplication Prohibited.
© 2017 MPS. All Rights Reserved.

ABSOLUTE MAXIMUM RATINGS (1)

IN, EN ..... -0.3V to +42V
OUT ..... -0.3V to +17V
PG ..... -0.3V to +15V
PGDL, FB ..... -0.3V to +6V
Junction temperature ..... +150°C
Lead temperature ..... +260°C
Storage temperature ..... -65°C to +150°C
Continuous power dissipation (T_A = +25°C) (2)
SOIC8 EP 2.5W

ESD Susceptibility

Human body mode (HBM) 4kV
Machine mode (MM) 200V

Recommended Operating Conditions

Supply voltage (V_{IN}) ..... 3V to 40V
Output voltage (V_{OUT}) ..... 1.25V to 15V
Operating temperature ..... T_A = -40°C to +125°C
$T_A \le T_J \le$ +150°C

Thermal Resistance (4) θ_{JA} θ_{JC}

SOIC8 EP ..... 50 ..... 10 ... °C/W

NOTES:

1) Exceeding these ratings may damage the device.
2) The maximum allowable power dissipation is a function of the maximum junction temperature T_J (MAX), the junction-to-ambient thermal resistance θ_{JA}, and the ambient temperature T_A. The maximum allowable continuous power dissipation at any ambient temperature is calculated by P_D (MAX) = (T_J (MAX)-T_A)/θ_{JA}. Exceeding the maximum allowable power dissipation produces an excessive die temperature, causing the regulator to go into thermal shutdown. Internal thermal shutdown circuitry protects the device from permanent damage.
3) Devices are ESD sensitive. Handle with caution.
4) Measured on JESD51-7, 4-layer PCB.

MPS Proprietary Information. Patent Protected. Unauthorized Photocopy and Duplication Prohibited.
© 2017 MPS. All Rights Reserved.

ELECTRICAL CHARACTERISTICS

V_{IN} = V_{EN} = 13.5V, T_J = -40°C to +125°C, unless otherwise noted. Typical values are at T_J = +25°C.

Parameter	Symbol	Condition	Min	Typ	Max	Units
Input voltage	V_{IN}		3		40	V
Output voltage range	V_{OUT}		1.25		15	V
GND current	I_{GND}	0 < I_{LOAD} < 1mA		10	15	µA
		1mA < I_{LOAD} < 30mA		15	21	
		30mA < I_{LOAD} < 300mA		65	95	
Shutdown supply current	I_S	V_{EN} = 0V			1	µA
Load current limit	I_{LIMIT}	V_{IN} = 7V, V_{OUT} = 0V, T_J = +25°C	600	1000	1350	mA
FB voltage	V_{FB}	FB = OUT, I_{LOAD} = 5mA	1.225	1.25	1.275	V
Output voltage accuracy		I_{LOAD} = 5mA, V_{OUT} = 10V	9.4	10	10.4	V
Dropout voltage (5)	$V_{DROPOUT}$	V_{OUT} = 10V, I_{LOAD} = 150mA		200	400	mV
		T_J = +25°C, V_{OUT} = 10V, I_{LOAD} = 450mA			1300	
FB input current	I_{FB}	V_{FB} = 1.3V			50	nA
Line regulation		V_{IN} = 3V to 40V, I_{LOAD} = 5mA, V_{OUT} = V_{FB}	-10	1	10	mV
Load regulation		I_{LOAD} = 5mA to 450mA, V_{OUT} = 10V, T_J = +25°C		30	60	mV
Output voltage PSRR (6)		100Hz, C_{OUT} = 10µF, I_{LOAD} = 10mA		57		dB
		1kHz, C_{OUT} = 10µF, I_{LOAD} = 10mA		45		dB
		100kHz, C_{OUT} = 10µF, I_{LOAD} = 10mA		51		dB
Start-up response time		R_{LOAD} = 500Ω, V_{OUT} = 10V, C_{OUT} = 22µF, V_{OUT} from 10% to 90%		1.9	2.5	ms
EN threshold voltage	V_{IL}				0.3	V
	V_{IH}		1.8			V
EN input current		EN = 0V or 15V		0.1	0.5	µA
PG rising threshold			89%	93%	97%	V_{FB}
PG rising threshold hysteresis				5%		V_{FB}
PG low voltage		Sink 1mA current		0.1	0.4	V
PG leakage current		V_{PG} = 5V			1	µA
PGDL charging current		V_{PGDL} = 1V	3	5.5	9	µA
PGDL rising threshold			1.4	1.7	2	V
PGDL falling threshold			0.2	0.4	0.7	V
PG delay time		C_{PGDL} = 47nF	5	10	15	ms
PG reaction time		C_{PGDL} = 47nF		0.5	2	µs
Thermal shutdown (6)	T_{SD}			150		°C
Thermal shutdown hysteresis (6)	ΔTSD			30		°C

NOTES:

5) Dropout voltage is measured when the output voltage (V_{OUT}) has dropped 100mV from the nominal value obtained at V_{IN} = 13.5V.
6) Derived from bench characterization. Not tested in production.

MPS Proprietary Information. Patent Protected. Unauthorized Photocopy and Duplication Prohibited.
© 2017 MPS. All Rights Reserved.

PIN FUNCTIONS

Pin #	Name	Description
1	OUT	**Regulated output voltage.** A low-value ceramic capacitor (≥0.47µF) on the output is required for stability.
2	NC	**No connection.**
3	GND	**Ground.** Connect the exposed pad and GND to the same ground plane.
4	IN	**Input voltage.** Connect a 3V to 40V supply to IN.
5	EN	**Regulator on/off control input.** Drive EN to logic low to shut down the IC. Drive EN to logic high to start up the IC. Connect EN to IN for automatic start-up.
6	PG	**Power good.**
7	PGDL	**Programmable power good delay time.**
8	FB	**Feedback input for output-adjustable version.** FB is regulated to 1.25V nominally. This terminal is used to set the output voltage.

MPS Proprietary Information. Patent Protected. Unauthorized Photocopy and Duplication Prohibited.
© 2017 MPS. All Rights Reserved.

TYPICAL PERFORMANCE CHARACTERISTICS

C_{IN} = 1µF, C_{OUT} = 22µF, V_{OUT} = 5V

Dropout Voltage vs. Junction Temperature

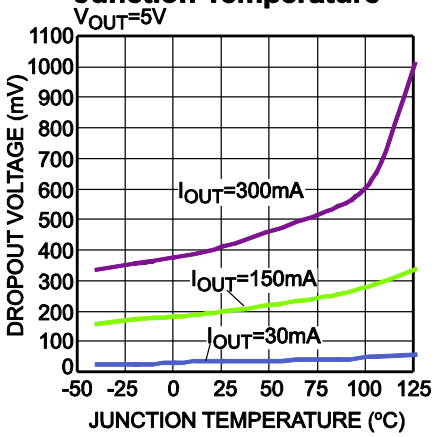

Feedback Voltage vs. Junction Temperature

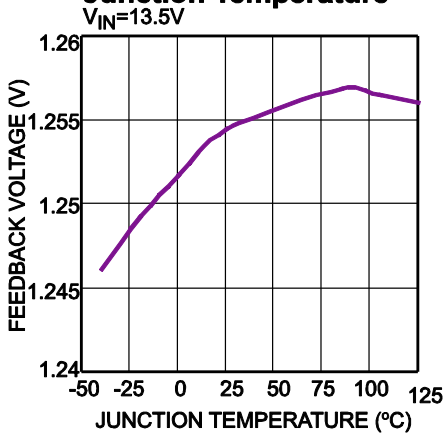

EN Threshold vs. Junction Temperature

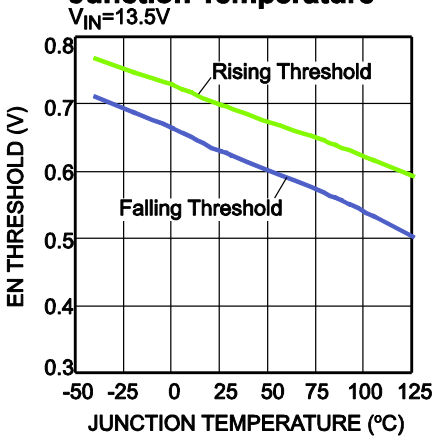

Shutdown Current vs. Junction Temperature

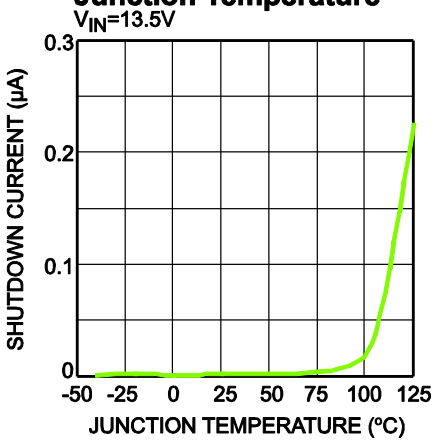

GND Current vs. Junction Temperature

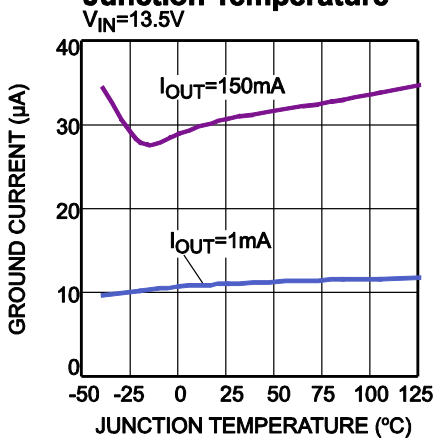

MPS Proprietary Information. Patent Protected. Unauthorized Photocopy and Duplication Prohibited.
© 2017 MPS. All Rights Reserved.

TYPICAL PERFORMANCE CHARACTERISTICS *(continued)*

C_{IN} = 1µF, C_{OUT} = 22µF, V_{OUT} = 5V, T_A = 25°C, unless otherwise noted.

Ground Current vs. Load Current
V_{IN}=6V

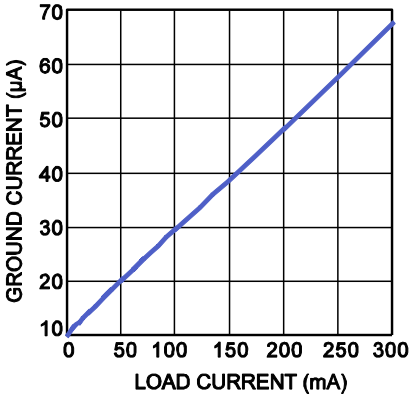

Ground Current vs. V_{IN}
I_{OUT}=0mA

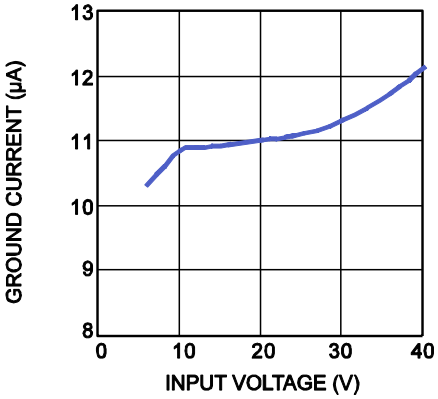

Dropout Voltage vs. Load Current
V_{OUT}=3.3V

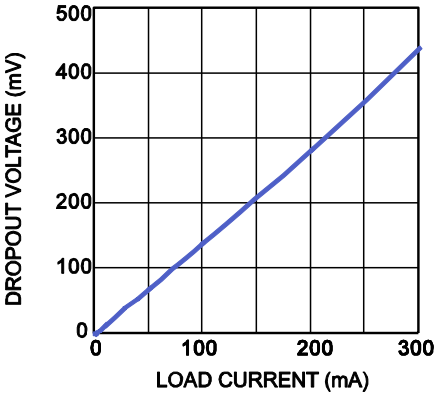

Dropout Voltage vs. Load Current

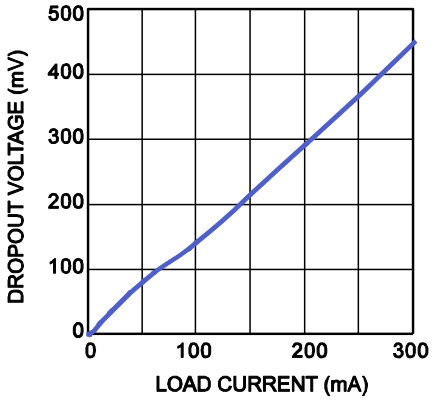

V_{OUT} vs. I_{OUT}
V_{IN}=6V

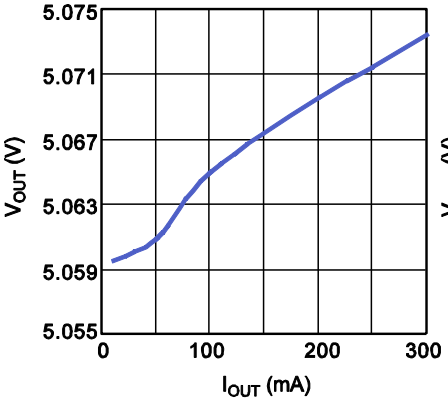

V_{OUT} vs. V_{IN}

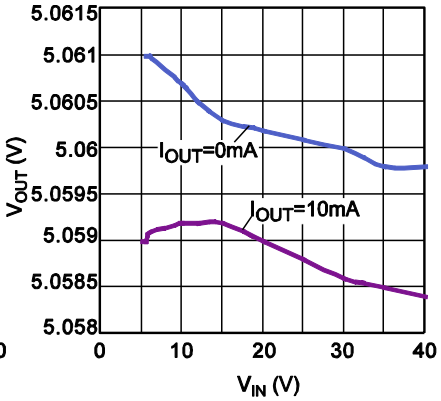

V_{OUT} vs. V_{IN}
V_{OUT}=3.3V

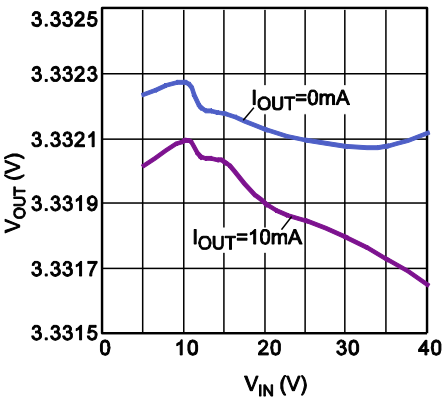

V_{OUT} vs. V_{IN}
V_{OUT}=2.5V

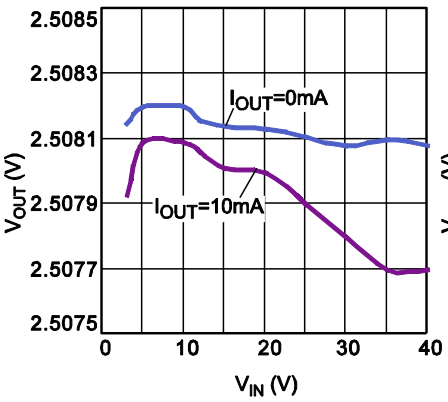

V_{OUT} vs. V_{IN}
V_{OUT}=1.8V

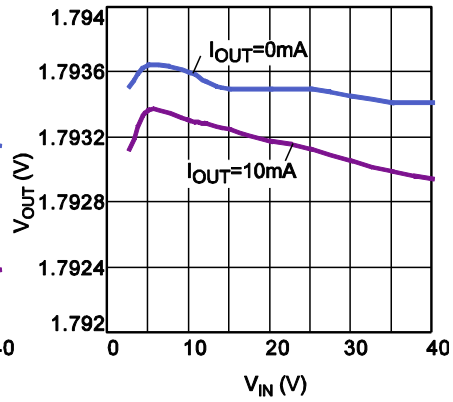

MPS Proprietary Information. Patent Protected. Unauthorized Photocopy and Duplication Prohibited.
© 2017 MPS. All Rights Reserved.

TYPICAL PERFORMANCE CHARACTERISTICS *(continued)*

C_{IN} = 1µF, C_{OUT} = 22µF, V_{OUT} = 5V, T_A = 25°C, unless otherwise noted.

V_{OUT} vs. V_{IN}
V_{OUT}=1.25V

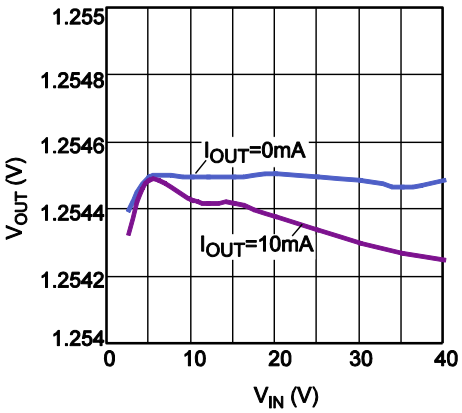

PSRR vs. Frequency

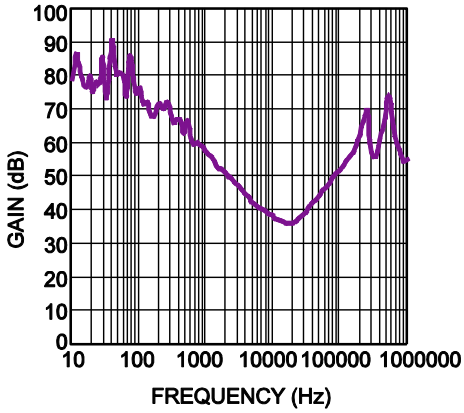

MPS Proprietary Information. Patent Protected. Unauthorized Photocopy and Duplication Prohibited.
© 2017 MPS. All Rights Reserved.

TYPICAL PERFORMANCE CHARACTERISTICS *(continued)*

C_{IN} = 1µF, C_{OUT} = 22µF, V_{OUT} = 5V, T_A = 25°C, unless otherwise noted.

Load Transient
V_{IN} = 12V, I_{OUT} = 300mA

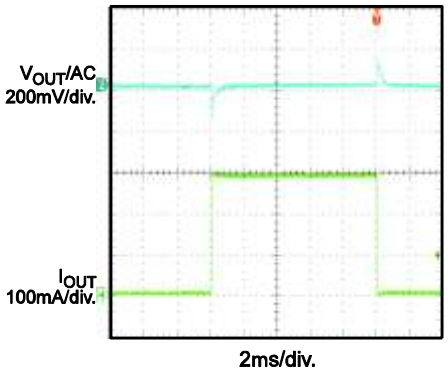

Line Transient
V_{IN} = 6V-7V, I_{OUT} = 300mA

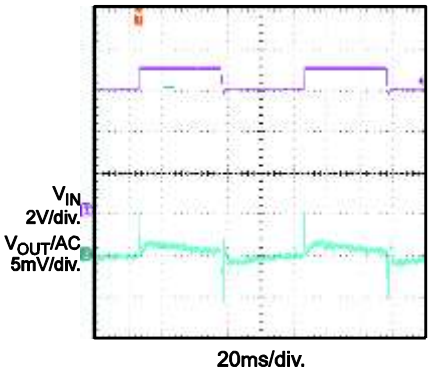

Start-Up through V_{IN}
V_{IN} = 12V, I_{OUT} = 300mA

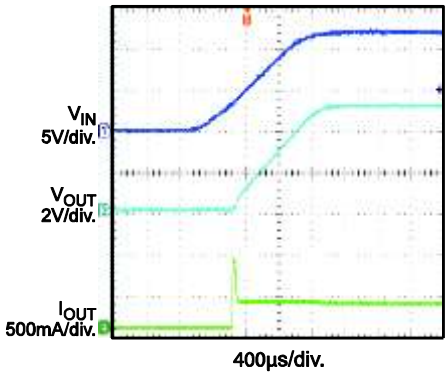

Shutdown through V_{IN}
V_{IN} = 12V, I_{OUT} = 300mA

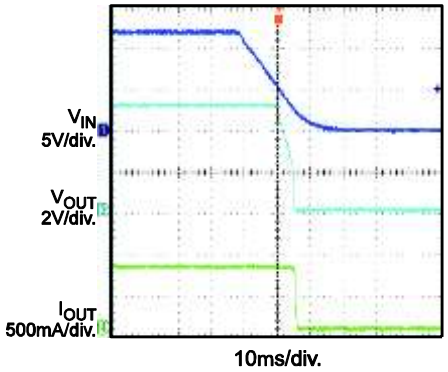

Short-Circuit Entry
V_{IN} = 12V,
I_{OUT} = 0mA to short circuit

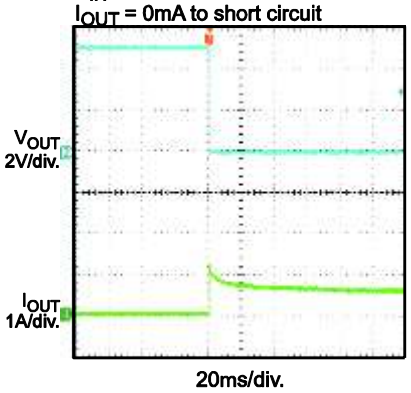

Short-Circuit Recovery
V_{IN} = 12V,
short circuit to I_{OUT} = 0mA

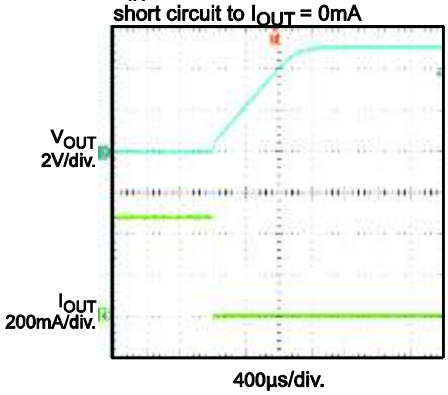

Short-Circuit Steady State
V_{IN} = 12V

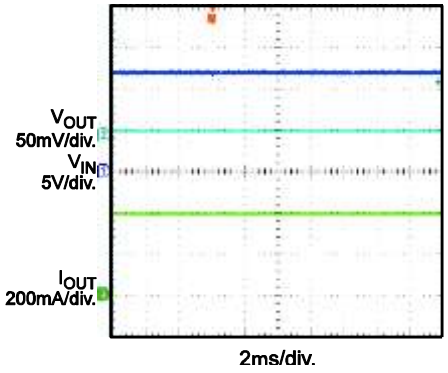

MPS Proprietary Information. Patent Protected. Unauthorized Photocopy and Duplication Prohibited.
© 2017 MPS. All Rights Reserved.

BLOCK DIAGRAM

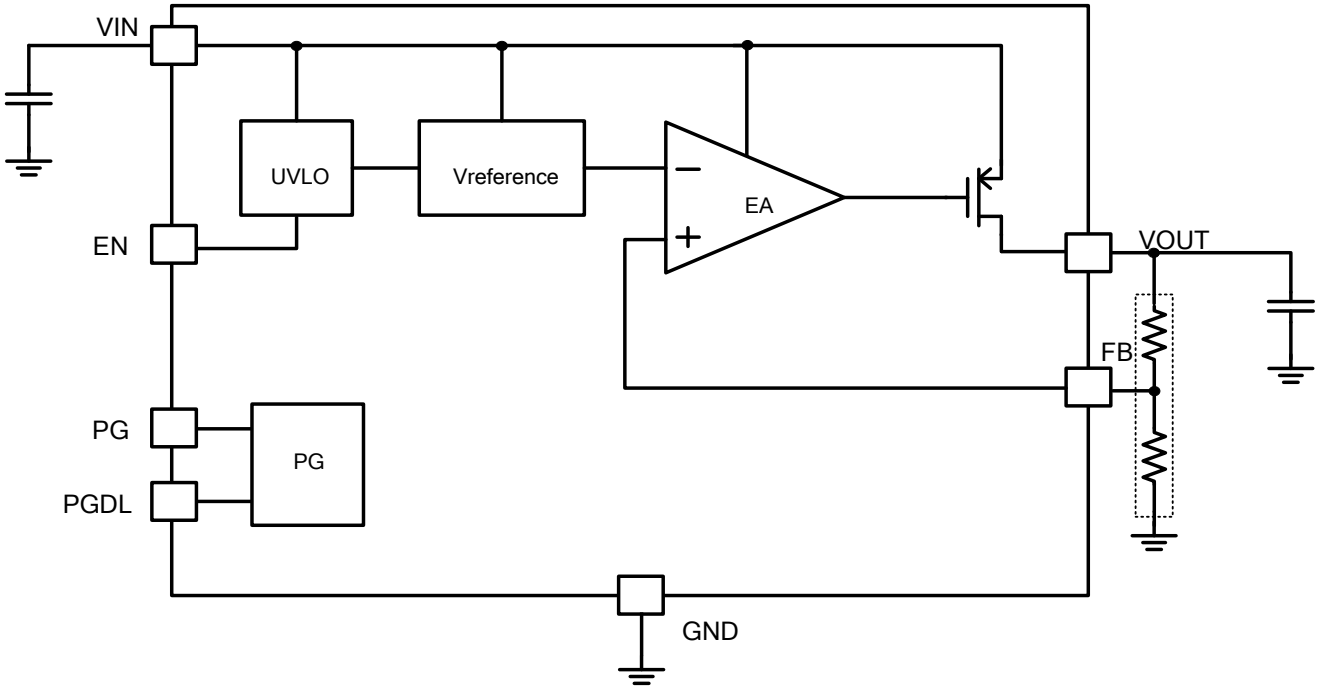

Figure 1: Functional Block Diagram

MPS Proprietary Information. Patent Protected. Unauthorized Photocopy and Duplication Prohibited.
© 2017 MPS. All Rights Reserved.

OPERATION

The MPQ2029 is a linear regulator that supplies power to systems with high-voltage batteries. The MPQ2029 includes a wide 3V to 40V input range, low dropout voltage, and low quiescent supply current.

The output is adjustable from 1.25V to 15V with a simple resistor divider and uses an external feedback, allowing the output voltage to be set with an external resistor divider. The FB threshold is 1.25V, typically.

The IC enters shutdown mode when EN is low. In shutdown mode, the pass transistor, control circuitry, reference, and all biases turn off. This reduces the supply current to less than 0.1µA. Connect EN to IN for automatic start-up.

The regulator output current is limited internally, and the device is protected against short-circuit, overload, and over-temperature conditions (see Figure 2).

The peak output current is limited to around 1000mA, which exceeds the recommended 450mA continuous output current.

When the junction temperature is too high, the thermal sensor sends a signal to the control logic that shuts down the IC. The IC restarts when the temperature has cooled sufficiently.

The maximum power-output current is a function of the package's maximum power dissipation for a given temperature.

The maximum power dissipation is dependent on the thermal resistance of the case and the circuit board, the temperature difference between the die junction and the ambient air, and the rate of air flow. GND and the exposed pad must be connected to the ground plane for proper dissipation.

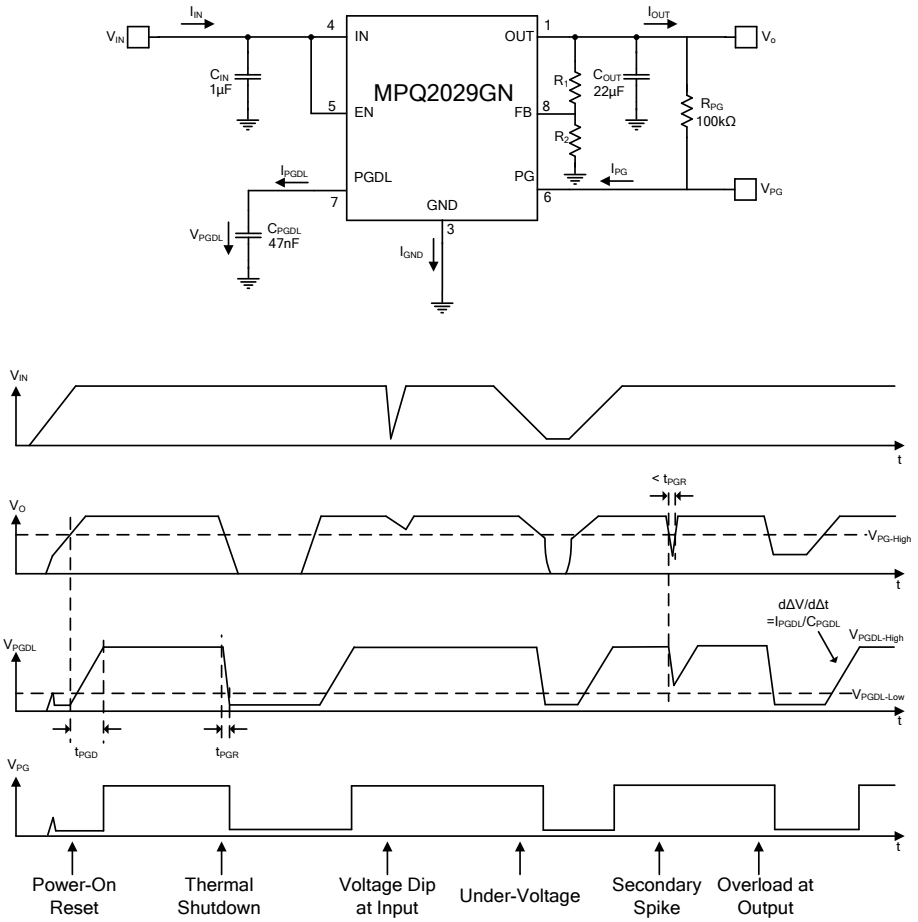

Figure 2: Power Good Timing

MPS Proprietary Information. Patent Protected. Unauthorized Photocopy and Duplication Prohibited.
© 2017 MPS. All Rights Reserved.

APPLICATION INFORMATION

Setting the Output Voltage

Set the output voltage of the MPQ2029 by using a resistor divider (see Figure 3).

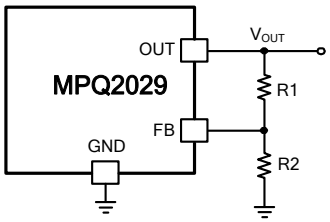

Figure 3: FB Resistor Divider to Set V_{OUT}

Choose R2 = 100kΩ to maintain a 12.5µA minimum load. Calculate R1 with Equation (1):

$$R1 = R2 \times \left(\frac{V_{OUT}}{1.25V} - 1 \right) \quad (1)$$

Table 1 shows an example of various output voltages using an external FB divider.

Table 1: Output External FB Divider

V_{OUT} (V)	R1 (kΩ)	R2 (kΩ)
10	698	100
8.5	576	100
8	536	100
6.5	422	100
5	300	100

Enable Control (EN)

EN is a digital control pin that turns the regulator on and off. When EN is pulled below 0.3V, the chip shuts down. When EN is pulled above 1.8V, the chip starts up. If this function is not used, EN can be connected to V_{IN} directly.

Selecting the Input Capacitor

For efficient operation, place a X5R or X7R type, dielectric, ceramic capacitor (C1) between 1µF and 10µF between the input pin and ground. Larger values in this range improve the line transient response.

Selecting the Output Capacitor

For stable operation, use a X5R or X7R type ceramic capacitor (C2) between 1µF and 22µF. Larger values in this range improve the load transient response and reduce noise. Output capacitors of other dielectric types may be used but are not recommended, as their capacitance can deviate greatly from their rated value over-temperature.

To improve the load transient response, add a small ceramic (X5R, X7R, or Y5V dielectric), 2.2nF, feed-forward capacitor in parallel with R1. The feed-forward capacitor is not required for stable operation.

Output Noise

The MPQ2029 exhibits noise on the output during normal operation. This noise is negligible for most applications. However, in applications that include analog-to-digital converters (ADCs) of more than 12 bits, consider the ADC's power supply rejection specifications. The feed-forward capacitor (C2) across R1 reduces output noise significantly.

External Reverse Voltage Protection

In some situations, such as when a backup battery is connected as the MPQ2029 load, the output voltage may be held up while the input is either pulled to ground to an intermediated voltage or is floating. This makes the output voltage higher than the input voltage. Since the MPQ2029 internal P-FET pass element has a body diode, a current conducts from the output to input and is not limited internally. It is possible that the IC can be damaged by this unlimited reverse current. To avoid this, it is recommended to insert an external diode into the input (see Figure 4).

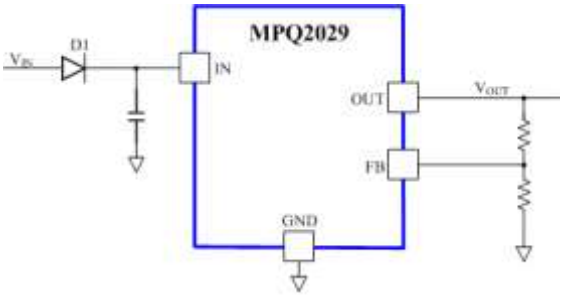

Figure 4: Adding an Input Diode

Thermal Consideration

The maximum operating junction temperature should not exceed 150°C. The junction temperature can be calculated with Equation (2):

$$T_J = \theta J_A \times P_{diss} + T_A \quad (2)$$

Where T_J is the junction temperature (°C), J_A is the junction-to-ambient thermal resistance (°C/W), P_{diss} is the device power dissipation, and T_A is the ambient temperature (°C).

MPS Proprietary Information. Patent Protected. Unauthorized Photocopy and Duplication Prohibited.
© 2017 MPS. All Rights Reserved.

P_{diss} can be calculated with Equation (3):

$$P_{diss} = (V_{IN} - V_{OUT}) \times I_{OUT} + V_{IN} \times I_{GND} \quad (3)$$

Given that I_{GND} is very small, P_{diss} can be approximated to be $(V_{IN} - V_{OUT}) \times I_{OUT}$, which can be calculated with Equation (4):

$$T_J = \theta J_A \times (V_{IN} - V_{OUT}) \times I_{OUT} + T_A \quad (4)$$

The junction-to-ambient thermal resistance (J_A) value depends on how well the PC board is laid out to distribute the heat. As a standard reference, a PC board layout per JESD51-7 on a 4-layer board has a θJ_A of 50°C/W. Consider the following two examples below.

1. Example 1:

   For this example, the input voltage is 12V, the output voltage is 5.0V, and the max T_A is 85°C.

   Calculate the maximum output current that can be drawn without exceeding a 150°C junction temperature with Equation (5):

$$\begin{aligned} T_J &= \theta J_A x(V_{IN} - V_{OUT}) x I_{OUT} + T_A \\ I_{OUT} &= (T_J - T_A)/[(V_{IN} - V_{OUT}) x \theta J_A] \\ I_{OUT} &= (150°C - 85°C)/[(12V - 5V) x 50°C/W = 186mA \end{aligned} \quad (5)$$

   To avoid exceeding a T_J value of 150°C, set I_{OUT_MAX} to 186mA.

2. Example 2:

   For this example, the input voltage is 12V, the output voltage is 10V, and the max T_A is 85°C.

   Calculate the maximum output current that can be drawn without exceeding a 150°C junction temperature with Equation (6):

$$\begin{aligned} T_J &= \theta J_A x(V_{IN} - V_{OUT}) x I_{OUT} + T_A \\ I_{OUT} &= (T_J - T_A)/[(V_{IN} - V_{OUT}) x \theta J_A] \\ I_{OUT} &= (150°C - 85°C)/[(12V - 10V) x 50°C/W = 650mA \end{aligned} \quad (6)$$

   This exceeds the 450mA current rating of the device.

   An I_{OUT} maximum value of 450mA is limited by the device rating and not by the thermal capability.

PCB Layout Guidelines

Efficient PCB layout is critical for good regulation, ripple rejection, transient response, and thermal performance. It is recommended to duplicate the EVB layout for optimum performance.

If changes are necessary, refer to Figure 5, Figure 6, and follow the guidelines below.

1) Place input bypass ceramic capacitors close to IN.
2) Place output bypass ceramic capacitors close OUT.
3) Ensure all feedback connections are short and direct.
4) Place the feedback resistors and compensation components as close to the chip as possible.
5) Connect IN, OUT, and especially GND to a large copper area to cool the chip.

   This improves thermal performance and long-term reliability.

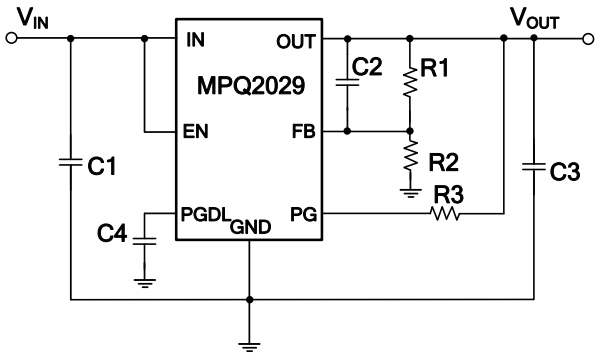

Figure 5: Typical Application

MPS Proprietary Information. Patent Protected. Unauthorized Photocopy and Duplication Prohibited.
© 2017 MPS. All Rights Reserved.

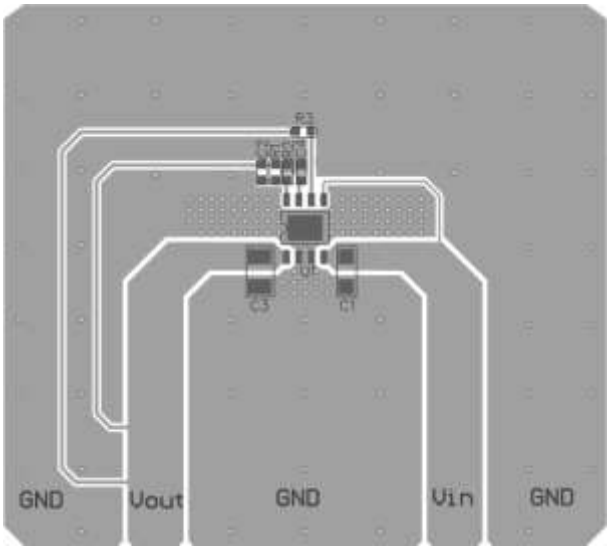

Top Layer

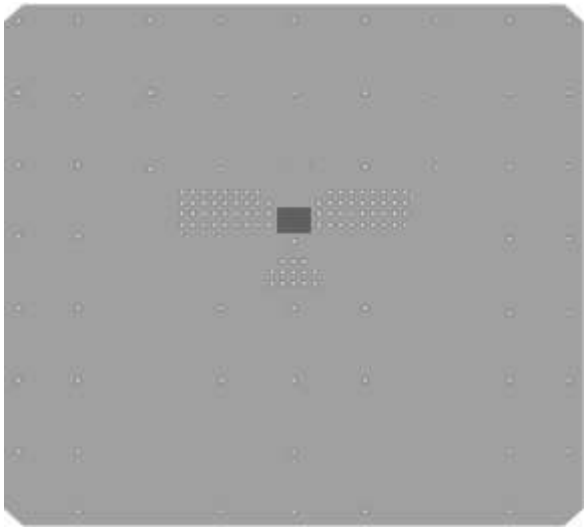

Bottom Layer
Figure 6: Recommended Layout

Design Example

Figure 7 is a design example following the application guidelines for V_{OUT} = 3.3V with a feed-forward capacitor (C2) in parallel with R1.

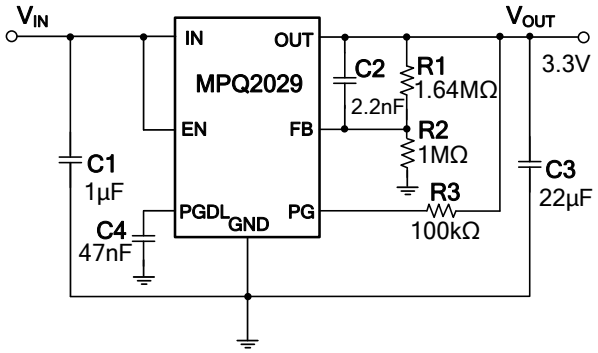

Figure 7: Design Example

The MPQ2029 does not have reverse polarity protection. To protect against reverse polarity, a series diode can be added at the input pin of the device (see Figure 8).

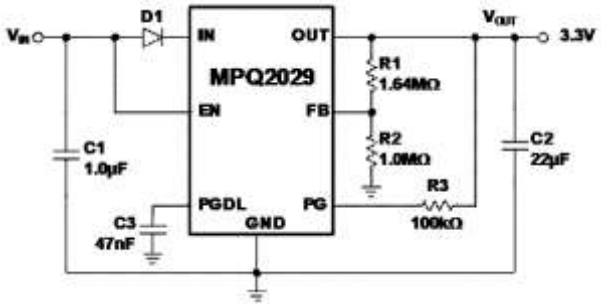

Figure 8: 3.3V Output with External Reverse Polarity Protection Diode (D1)

MPS Proprietary Information. Patent Protected. Unauthorized Photocopy and Duplication Prohibited.
© 2017 MPS. All Rights Reserved.

PACKAGE INFORMATION

SOIC8 EP

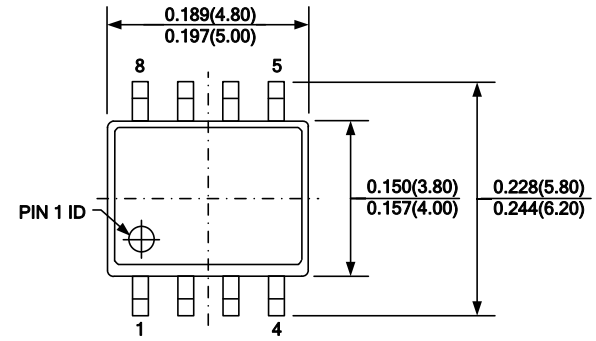

TOP VIEW

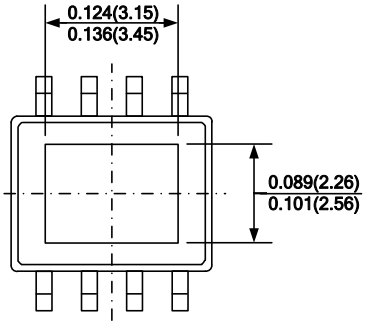

BOTTOM VIEW

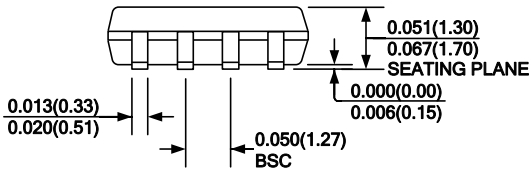

FRONT VIEW

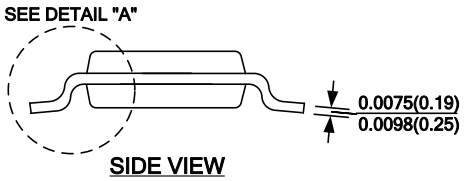

SIDE VIEW

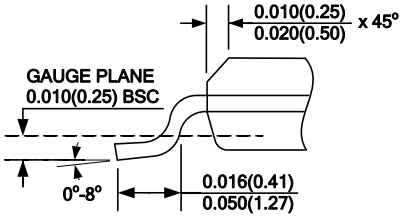

DETAIL "A"

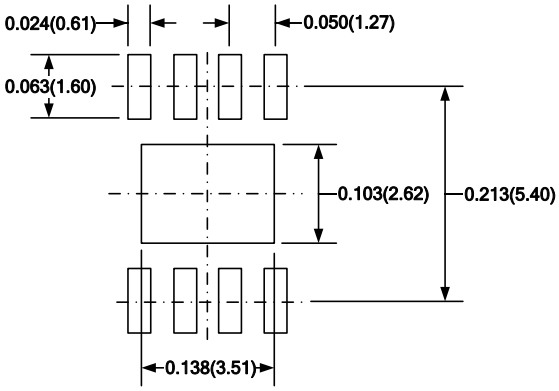

RECOMMENDED LAND PATTERN

NOTE:

1) CONTROL DIMENSION IS IN INCHES. DIMENSION IN BRACKET IS IN MILLIMETERS.
2) PACKAGE LENGTH DOES NOT INCLUDE MOLD FLASH, PROTRUSIONS, OR GATE BURRS.
3) PACKAGE WIDTH DOES NOT INCLUDE INTERLEAD FLASH OR PROTRUSIONS.
4) LEAD COPLANARITY (BOTTOM OF LEADS AFTER FORMING) SHALL BE 0.004" INCHES MAX.
5) DRAWING CONFORMS TO JEDEC MS-012, VARIATION BA.
6) DRAWING IS NOT TO SCALE.

NOTICE: The information in this document is subject to change without notice. Users should warrant and guarantee that third party Intellectual Property rights are not infringed upon when integrating MPS products into any application. MPS will not assume any legal responsibility for any said applications.

© 2017 MPS. All Rights Reserved.