

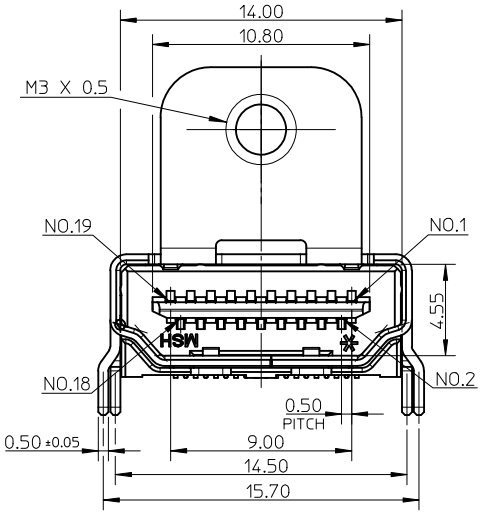

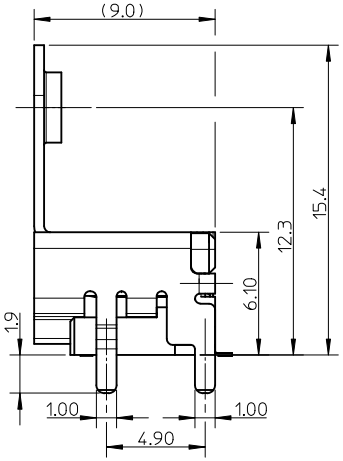

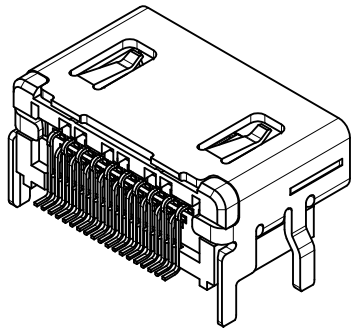

WITHOUT FLANGE

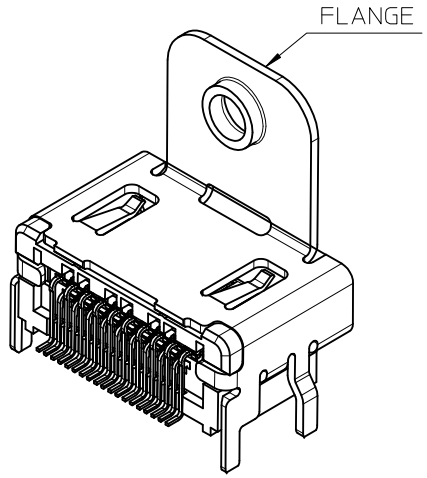

WITH FLANGE

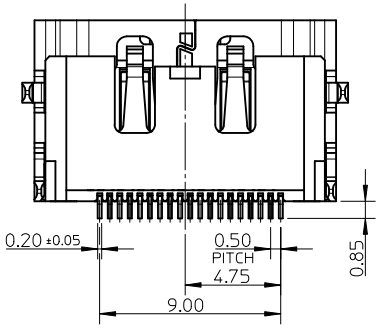

NOTES:

1. MATERIAL:
   HOUSING: HIGH TEMPERATURE THERMAL PLASTIC. COLOR: SEE TABLE.
   SHELL: COPPER ALLOY.
   TERMINAL: COPPER ALLOY.
2. PLATING:
   TERMINAL:
   CONTACT AREA: (1) 0.76 MICROMETER MIN. GOLD PLATING.
   (2) 0.25 MICROMETER MIN. GOLD PLATING.
   (3) GOLD FLASH.
   SOLDER AREA: 1 MICROMETER MIN. TIN-BISMUTH ALLOY PLATING.
   UNDER PLATE: 1.27 MICROMETER MIN. NICKEL PLATING.
   SHELL: (1) 1.27 MICROMETER MIN. MATTE TIN PLATING OVERALL.
   (2) 0.75 MICROMETER MIN. SOLDERABLE NICKEL PLATING OVERALL.
3. TERMINAL RETENTION FORCE TO BE 0.3kgf Min.
4. PRODUCT SPECIFICATION: PS-47152-001.
5. PACKAGE SPECIFICATION: SEE TABLE.
6. COPLANARITY OF ALL TERMINALS IS 0.10mm MAX.
7. PRODUCT COMPLIANT TO RoHS DIRECTIVE 2002/95/EC AND ELV DIRECTIVE 2000/53/EC.

REVISED
EC NO: SH2010-0165 2009/11/03
DRWN:XOZHANG 2009/11/03
CH'KD:GLI 2010/01/28
APPR:XJSONG
DESCRIPTION
REV: H

QUALITY SYMBOLS
F_W=0
F_C=0
F_P=0

GENERAL TOLERANCES (UNLESS SPECIFIED)

	mm	INCH
4 PLACES	± ---	± ---
3 PLACES	± ---	± ---
2 PLACES	± 0.20	± ---
1 PLACE	± 0.30	± ---
ANGULAR ± 2 °		

DRAFT WHERE APPLICABLE MUST REMAIN WITHIN DIMENSIONS

DIMENSION STYLE: MM ONLY
SCALE: 4:1
DESIGN UNITS: METRIC
THIRD ANGLE PROJECTION

DRAWN BY: ROST ZHANG DATE: 2005/05/20
CHECKED BY: GRATE MA DATE: 2005/05/20
APPROVED BY: XJSONG DATE: 2010/01/26

TITLE: HDMI RECEPTACLE W/SCREW R/A SMT CUSTOMER DRAWING

MOLEX INCORPORATED

MATERIAL NO.: SEE SHEET 2
DOCUMENT NO.: SD-47266-001
SHEET NO.: 1 OF 2
SIZE: A3

THIS DRAWING CONTAINS INFORMATION THAT IS PROPRIETARY TO MOLEX INCORPORATED AND SHOULD NOT BE USED WITHOUT WRITTEN PERMISSION

P/N	HOUSING COLOR	CONTACT AREA PLATING	SHELL PLATING	REMARK	PACKAGE SPECIFICATION
47266-7211	NATURE	SEE NOTE 2(3)	SOLDERABLE NICKEL	WITHOUT FLANGE	TAPE & REEL, PK-47266-001
47266-7111		SEE NOTE 2(2)			
47266-7011		SEE NOTE 2(1)			
47266-6201	BLACK	SEE NOTE 2(3)	SOLDERABLE NICKEL	WITHOUT FLANGE	TAPE & REEL, PK-47266-001
47266-6101		SEE NOTE 2(2)			
47266-6001		SEE NOTE 2(1)			
47266-5211	NATURE	SEE NOTE 2(3)	SOLDERABLE NICKEL	WITH FLANGE	TAPE & REEL, PK-47266-003
47266-5111		SEE NOTE 2(2)			
47266-5011		SEE NOTE 2(1)			
47266-4211	BLACK	SEE NOTE 2(3)	SOLDERABLE NICKEL	WITH FLANGE	TAPE & REEL, PK-47266-003
47266-4111		SEE NOTE 2(2)			
47266-4011		SEE NOTE 2(1)			
47266-5201	NATURE	SEE NOTE 2(3)	SOLDERABLE NICKEL	WITH FLANGE	TRAY, PK-47266-002
47266-5101		SEE NOTE 2(2)			
47266-5001		SEE NOTE 2(1)			
47266-4201	BLACK	SEE NOTE 2(3)	SOLDERABLE NICKEL	WITH FLANGE	TRAY, PK-47266-002
47266-4101		SEE NOTE 2(2)			
47266-4001		SEE NOTE 2(1)			
47266-3201	NATURE	SEE NOTE 2(3)	MATTE TIN	WITHOUT FLANGE	TAPE & REEL, PK-47266-001
47266-3101		SEE NOTE 2(2)			
47266-3001		SEE NOTE 2(1)			
47266-2201	BLACK	SEE NOTE 2(3)	MATTE TIN	WITHOUT FLANGE	TAPE & REEL, PK-47266-001
47266-2101		SEE NOTE 2(2)			
47266-2001		SEE NOTE 2(1)			
47266-1211	NATURE	SEE NOTE 2(3)	MATTE TIN	WITH FLANGE	TAPE & REEL, PK-47266-003
47266-1111		SEE NOTE 2(2)			
47266-1011		SEE NOTE 2(1)			
47266-0211	BLACK	SEE NOTE 2(3)	MATTE TIN	WITH FLANGE	TAPE & REEL, PK-47266-003
47266-0111		SEE NOTE 2(2)			
47266-0011		SEE NOTE 2(1)			
47266-1201	NATURE	SEE NOTE 2(3)	MATTE TIN	WITH FLANGE	TRAY, PK-47266-005
47266-1101		SEE NOTE 2(2)			TRAY, PK-47266-002
47266-1001		SEE NOTE 2(1)			
47266-0201	BLACK	SEE NOTE 2(3)	MATTE TIN	WITH FLANGE	TRAY, PK-47266-005
47266-0101		SEE NOTE 2(2)			TRAY, PK-47266-002
47266-0001		SEE NOTE 2(1)			

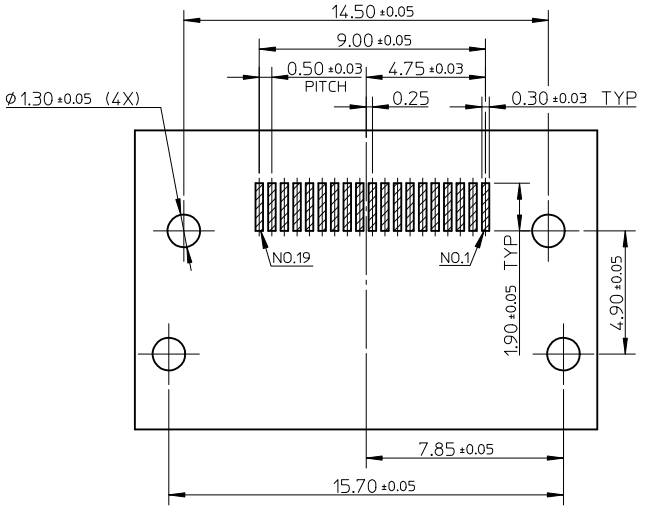

RECOMMEND PCB LAYOUT

CONNECTOR SIDE VIEW

SEE SHEET 1
EC NO: SH2010-0165 2009/11/03
DRWN:XOZHANG 2009/11/03
CH'KD:GLLI 2010/01/28
APPR:XJSONG
DESCRIPTION
REV H

QUALITY SYMBOLS
$\sqrt{E_A}$=0
$\sqrt{E_C}$=0
$\sqrt{E_P}$=0

GENERAL TOLERANCES (UNLESS SPECIFIED)

	mm	INCH
4 PLACES	± ---	± ---
3 PLACES	± ---	± ---
2 PLACES	± 0.20	± ---
1 PLACE	± 0.30	± ---
ANGULAR ± 2 °		

DRAFT WHERE APPLICABLE MUST REMAIN WITHIN DIMENSIONS

DIMENSION STYLE: MM ONLY
SCALE: 4:1
DESIGN UNITS: METRIC
THIRD ANGLE PROJECTION

DRAWN BY: ROST ZHANG DATE: 2005/05/20
CHECKED BY: GRATE MA DATE: 2005/05/20
APPROVED BY: XJSONG DATE: 2010/01/26
MATERIAL NO.: SEE TABLE

TITLE: HDMI RECEPTACLE W/SCREW R/A SMT CUSTOMER DRAWING

MOLEX INCORPORATED

DOCUMENT NO.: SD-47266-001
SHEET NO.: 2 OF 2

SIZE: A3

THIS DRAWING CONTAINS INFORMATION THAT IS PROPRIETARY TO MOLEX INCORPORATED AND SHOULD NOT BE USED WITHOUT WRITTEN PERMISSION