TABLE OF CONTENTS

SHEET NO.	SHEET DESCRIPTION
1	NOTES AND BOM
2	CONFIGURATIONS
3-4	KEY CONFIGURATIONS
5	BLADE SEALED ASSEMBLY
6	SYSTEM PACKAGING
7	BACKSHELL NOTES
8	BACKSHELL
9	BACKSHELL CONFIGURATIONS

NOTES: VALID UNLESS OTHERWISE SPECIFIED

1. GENERAL:
a. APPLICATION SPECIFICATION SEE: AS-33472-100
-CONTAINS: PRODUCT INTRODUCTION, PRODUCT SUMMARY, CONNECTOR ASSEMBLY, PACKAGING INFORMATION, CONNECTOR MATING, SERVICE INSTRUCTIONS, ELECTRICAL CONTINUITY CHECKING, CRIMPING, AND TROUBLESHOOTING.
-DESIGNED TO MATE WITH RECEPTACLE SEALED ASSEMBLY AS SPECIFIED IN THE MATING CONNECTOR DRAWINGS CHART.
*DENOTES DRAWINGS THAT CAN BE ACCESSED AT <http://ewcap.uscarteams.org/>.
-ASSEMBLY SHIPPED WITH PLR IN PRE-LOCK POSITION (SEE PLR PRE-LOCK VIEW SHEET 5).

b. PRODUCT SPECIFICATION SEE:
-STANDARD CONFIGURATION: PS-33472-000
-UL V0 CONFIGURATION: TBD
CONTAINS: PRODUCT INTRODUCTION, PRODUCT SUMMARY, RATINGS (CURRENT, TEMPERATURE, SEALING, AND FLAMMABILITY), TERMINALS, WIRE DIAMETER RANGE, PRODUCT VALIDATION, AND PRODUCT DEVIATIONS.
c. PACKAGING SPECIFICATION PER MOLEX DRAWING: PK-31300-635
d. PARTS MUST BE IN COMPLIANCE TO MOLEX CHEMICAL SUBSTANCES FOR PRODUCTS AND PACKAGING SPECIFICATION: QEHS-699000-300
e. DATA MUST BE SUBMITTED UNDER THE MOLEX PART NUMBER TO IMDS (COMPANY ID#13255)

2. DESIGN - MATERIALS:
a. FOR BILL OF MATERIALS SEE:
-STANDARD CONFIGURATION: SD-33482-0002
-UL V0 CONFIGURATION: SD-160084-0002

3. DESIGN - GEOMETRY:
a. THE 3-D CAD DATA IS BASIC (WITHOUT TOLERANCE) AND MASTER FOR THIS PART WITH THE EXCEPTION OF UNDERLINED DIMENSIONS. DIMENSIONAL INFORMATION NOT SHOWN ON THIS DRAWING IS DEFINED BY THE DATA FILE AT ITS LATEST REVISION.
b. GEOMETRIC DIMENSIONS AND TOLERANCES PER ASME Y14.5M-2009
c. EDGES AND UNDIMENSIONED DETAILS PER ISO13715
d. CORNERS SHOWN AS SHARP TO BE R 0.2 MAX.
e. LETTERING SHALL BE 0.15 MAX RAISED IN 0.25 MAX RECESS PAD. THIS INCLUDES RECYCLING CODE, CAVITY ID, VENDOR IDENTIFICATION, AND CUSTOMER MATERIAL NUMBER.
f. VISUAL DEFECTS SHALL MEET COSMETIC STANDARD PS-45499-002 (Class B).
g. LASER MARKING:
1. PART NUMBER
2. DAY OF THE YEAR
3. SHIFT
4. YEAR
FOR ADDITIONAL INFORMATION SEE SECTION 5 UNDER PROCEDURES IN ES-34735-008.

MATING CONNECTOR DRAWINGS

DESCRIPTION	MOLEX INLINE
2X2	SD-33472-0001
2X3	SD-33472-0001
2X4	SD-33472-0001
2X6	SD-33472-0001
2X8	SD-33472-0001
2X10	SD-33472-0001

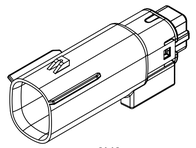
2X2

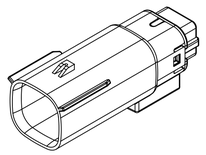
2X3

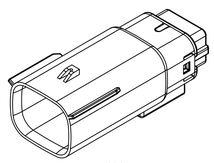
2X4

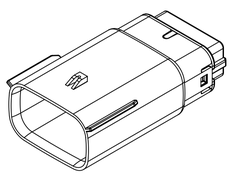
2X6

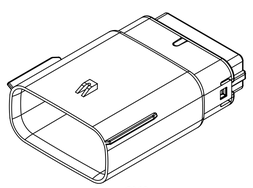
2X8

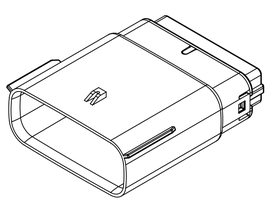
2X10

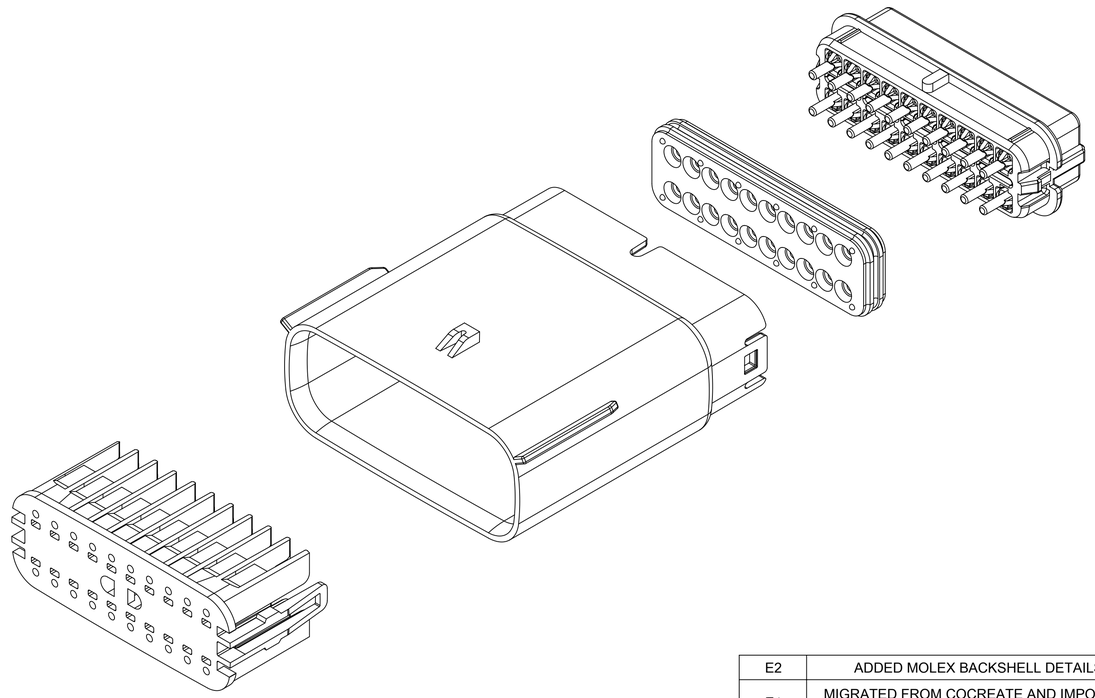

INSPECTION NUMBER LOG
LAST NUMBER: 9 ADDED: REMOVED:

REV	REV DESCRIPTION
E2	ADDED MOLEX BACKSHELL DETAILS
E1	MIGRATED FROM COCREATE AND IMPORTED DXF FILES
E	ADDED CHARTED DIMENSIONS FOR 2X2, 2X4, 2X6 AND 2X8 WITH CLIPSLOT
D	MINOR GEOMETRY CHANGE FOR UL V0
C3	ADD 2X4
C2	ADD 2X3
C1	ADD UL V0 CONFIGURATIONS
C	ADD 2X8
B1	ADD 2X6 BACKSHELL INFO
B	ADD 2X6
A	INITIAL RELEASE

THIS DRAWING CONTAINS INFORMATION THAT IS PROPRIETARY TO MOLEX ELECTRONIC TECHNOLOGIES, LLC AND SHOULD NOT BE USED WITHOUT WRITTEN PERMISSION

SYMBOLS	
= 0	
= 0	
= 0	
= 0	
= 0	
= 0	
= 0	
= 0	
= 0	

DIMENSION UNITS	SCALE
mm	1.5:1

GENERAL TOLERANCES (UNLESS SPECIFIED)		
ANGULAR TOL	±	1.0 °
4 PLACES	±	
3 PLACES	±	
2 PLACES	±	0.1
1 PLACE	±	0.2
0 PLACES	±	

DRAFT WHERE APPLICABLE MUST REMAIN WITHIN DIMENSIONS

CURRENT REV DESC:

EC NO: 171650
DRWN: PMANJUNATHAC 2018/01/03
CHK'D: MVANSLAMBROU 2018/02/16
APPR: MVANSLAMBROU 2018/02/16

INITIAL REVISION:
DRWN: APROFFITT 2014/04/28
APPR: VKOSHY 2014/05/14

THIRD ANGLE PROJECTION | DRAWING: A1-SIZE | SERIES: 33482

molex

MX150 BLADE
DUAL ROW SEALED ASSEMBLY MAT SEAL

PRODUCT CUSTOMER DRAWING

DOCUMENT NUMBER	DOC TYPE	DOC PART	REVISION
SD-33482-0001	PSD	001	E2

MATERIAL NUMBER | CUSTOMER: GENERAL MARKET | SHEET NUMBER: 1 OF 11

DOCUMENT STATUS	P1	RELEASE DATE	2018/02/16 22:02:26

SHEET DESCRIPTION
CONFIGURATIONS

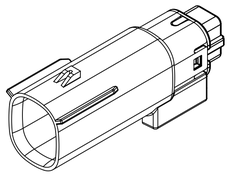

2X2 - STANDARD (STD)

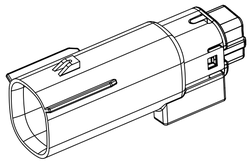

2X2 - UL V0*

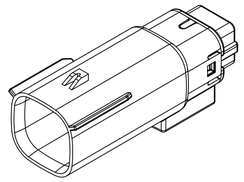

2X3 - STANDARD (STD)

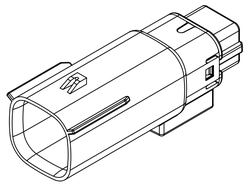

2X3 - LENGTHENED

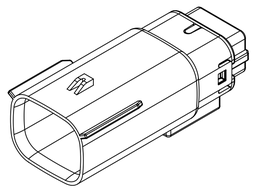

2X4 - STANDARD (STD)

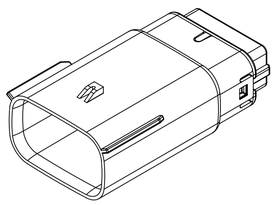

2X6 - STANDARD (STD)

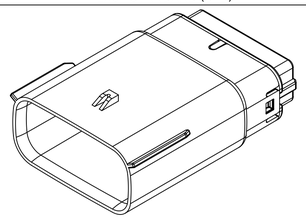

2X8 - STANDARD (STD)

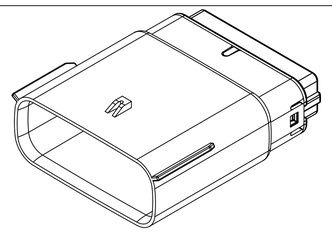

2X10 - STANDARD (STD)

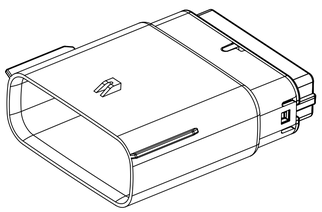

2X10 - UL V0*

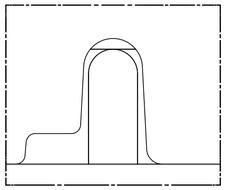

UL V0 UNIQUE FEATURE

Partial1

SCALE 10:1

* MINOR GEOMETRY CHANGE THAN STANDARD CONFIGURATION.

SEE NOTE 2a FOR MORE INFORMATION

DOCUMENT STATUS	P1	RELEASE DATE	2018/02/16 22:02:26

SYMBOLS	
A =	0
C =	0
E =	0
S =	0
▼ =	0
C =	0
☒ =	0
■ =	0
V =	0

THIS DRAWING CONTAINS INFORMATION THAT IS PROPRIETARY TO MOLEX ELECTRONIC TECHNOLOGIES, LLC AND SHOULD NOT BE USED WITHOUT WRITTEN PERMISSION

DIMENSION UNITS	SCALE
mm	1.5:1

GENERAL TOLERANCES (UNLESS SPECIFIED)		
ANGULAR TOL	±	1.0 °
4 PLACES	±	
3 PLACES	±	
2 PLACES	±	0.1
1 PLACE	±	0.2
0 PLACES	±	

DRAFT WHERE APPLICABLE MUST REMAIN WITHIN DIMENSIONS

CURRENT REV DESC:

EC NO: 171650

DRWN: PMANJUNATHAC 2018/01/03

CHK'D: MVANSLAMBROU 2018/02/16

APPR: MVANSLAMBROU 2018/02/16

INITIAL REVISION:

DRWN: APROFFITT 2014/04/28

APPR: VKOSHY 2014/05/14

THIRD ANGLE PROJECTION | DRAWING: A1-SIZE | SERIES: 33482

molex

MX150 BLADE
DUAL ROW SEALED ASSEMBLY MAT SEAL

PRODUCT CUSTOMER DRAWING

DOCUMENT NUMBER	DOC TYPE	DOC PART	REVISION
SD-33482-0001	PSD	001	E2

MATERIAL NUMBER	CUSTOMER	SHEET NUMBER
	GENERAL MARKET	2 OF 11

SHEET DESCRIPTION
KEY CONFIGURATIONS

2X2

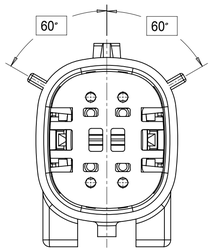

KEY A

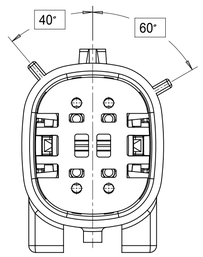

KEY B

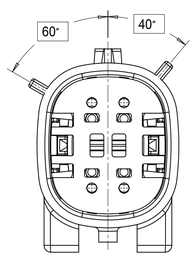

KEY C

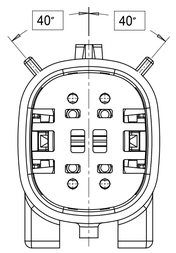

KEY D

2X3

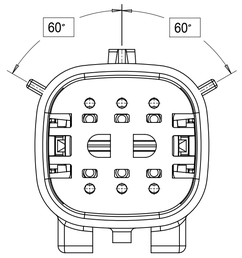

KEY A

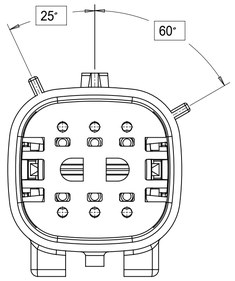

KEY B

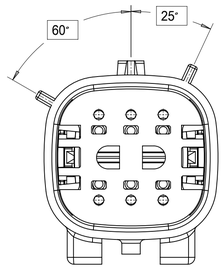

KEY C

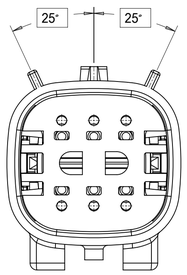

KEY D

2X4

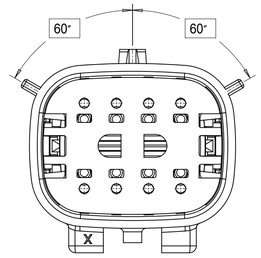

KEY A

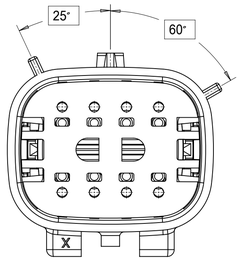

KEY B

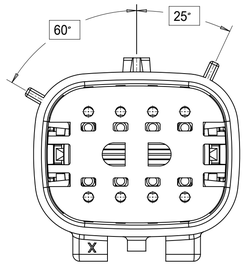

KEY C

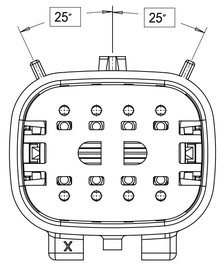

KEY D

SYMBOLS
= 0
= 0
= 0
= 0
= 0
= 0
= 0
= 0
= 0

THIS DRAWING CONTAINS INFORMATION THAT IS PROPRIETARY TO MOLEX ELECTRONIC TECHNOLOGIES, LLC AND SHOULD NOT BE USED WITHOUT WRITTEN PERMISSION

DIMENSION UNITS	SCALE
mm	3:1

GENERAL TOLERANCES (UNLESS SPECIFIED)		
ANGULAR TOL	±	1.0 °
4 PLACES	±	
3 PLACES	±	
2 PLACES	±	0.1
1 PLACE	±	0.2
0 PLACES	±	

DRAFT WHERE APPLICABLE MUST REMAIN WITHIN DIMENSIONS

CURRENT REV DESC:

EC NO: 171650
DRWN: PMANJUNATHAC 2018/01/03
CHK'D: MVANSLAMBROU 2018/02/16
APPR: MVANSLAMBROU 2018/02/16

INITIAL REVISION:
DRWN: APROFFITT 2014/04/28
APPR: VKOSHY 2014/05/14

THIRD ANGLE PROJECTION | DRAWING: A1-SIZE | SERIES: 33482

molex

MX150 BLADE
DUAL ROW SEALED ASSEMBLY MAT SEAL

PRODUCT CUSTOMER DRAWING

DOCUMENT NUMBER	DOC TYPE	DOC PART	REVISION
SD-33482-0001	PSD	001	E2

MATERIAL NUMBER	CUSTOMER	SHEET NUMBER
	GENERAL MARKET	3 OF 11

DOCUMENT STATUS	P1	RELEASE DATE	2018/02/16 22:02:26

COPYRIGHT, creation date unknown
REVISIONS: 1x
DATE: 2017/10/30

SHEET DESCRIPTION
KEY CONFIGURATIONS CONT.

2X6

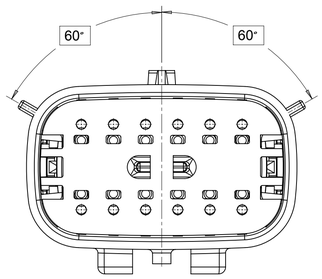

KEY A

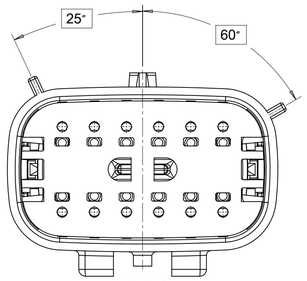

KEY B

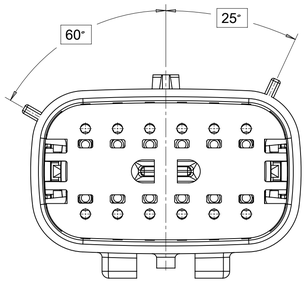

KEY C

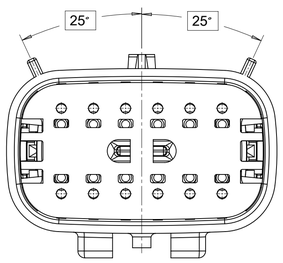

KEY D

2X8

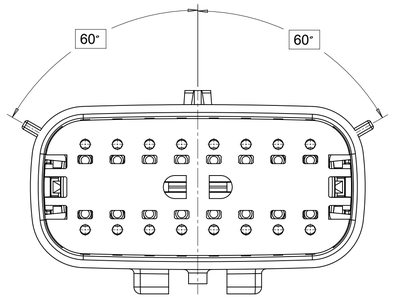

KEY A

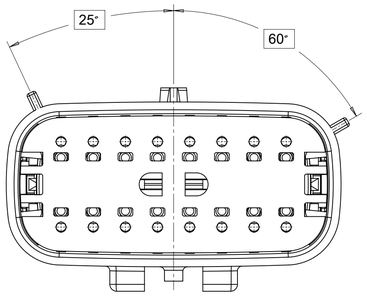

KEY B

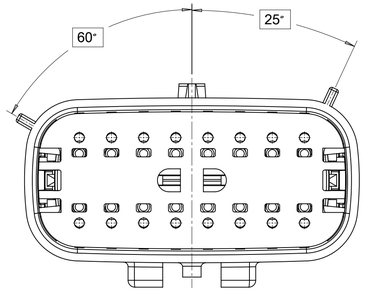

KEY C

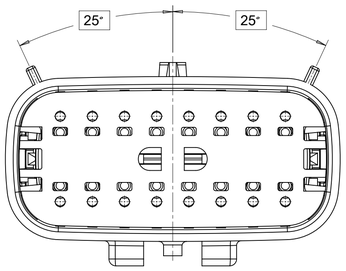

KEY D

2X10

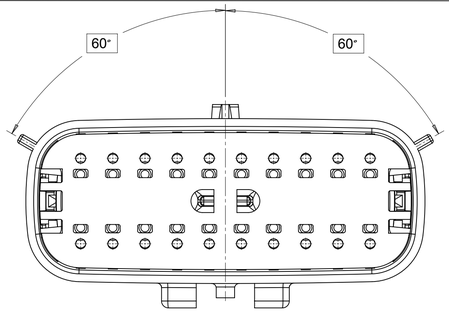

KEY A

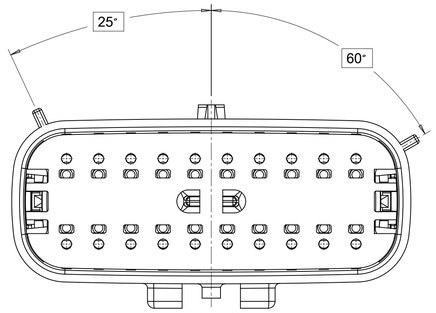

KEY B

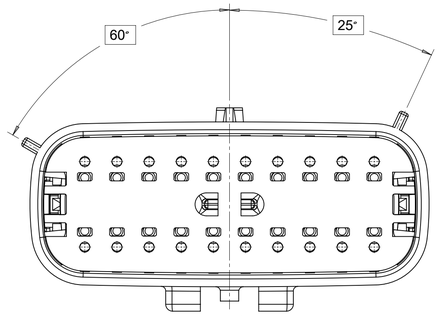

KEY C

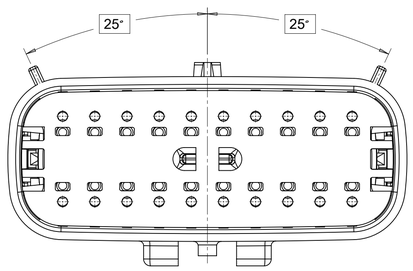

KEY D

SYMBOLS
= 0
= 0
= 0
= 0
= 0
= 0
= 0
= 0
= 0

THIS DRAWING CONTAINS INFORMATION THAT IS PROPRIETARY TO MOLEX ELECTRONIC TECHNOLOGIES, LLC AND SHOULD NOT BE USED WITHOUT WRITTEN PERMISSION

DIMENSION UNITS	SCALE
mm	3:1

GENERAL TOLERANCES (UNLESS SPECIFIED)		
ANGULAR TOL	±	1.0 °
4 PLACES	±	
3 PLACES	±	
2 PLACES	±	0.1
1 PLACE	±	0.2
0 PLACES	±	

DRAFT WHERE APPLICABLE MUST REMAIN WITHIN DIMENSIONS

CURRENT REV DESC:

EC NO: 171650
DRWN: PMANJUNATHAC 2018/01/03
CHK'D: MVANSLAMBROU 2018/02/16
APPR: MVANSLAMBROU 2018/02/16

INITIAL REVISION:
DRWN: APROFFITT 2014/04/28
APPR: VKOSHY 2014/05/14

THIRD ANGLE PROJECTION | DRAWING: A1-SIZE | SERIES: 33482

molex

MX150 BLADE
DUAL ROW SEALED ASSEMBLY MAT SEAL

PRODUCT CUSTOMER DRAWING

DOCUMENT NUMBER	DOC TYPE	DOC PART	REVISION
SD-33482-0001	PSD	001	E2

MATERIAL NUMBER	CUSTOMER	SHEET NUMBER
	GENERAL MARKET	4 OF 11

DOCUMENT STATUS	P1	RELEASE DATE	2018/02/16 22:02:26

COPYRIGHT - creation date (yyyy-m-d) 1
DRAWING No. 33482
DATE: 2017/10/09

SHEET DESCRIPTION
BLADE SEALED ASSEMBLY

CHARTED DIMENSION					
DESCRIPTION	DIMENSIONS				
	A	B	C	D	E
2X2	15.54	1.75	24.40	54.45	22.23
2X3 STANDARD	19.04	3.50	26.21	54.45	22.23
2X3 LENGTHENED	19.04	3.50	26.21	56.45	22.23
2X4	22.54	1.75	27.21	54.45	22.23
2X6	29.54	1.75	32.27	54.45	22.23
2X8	36.54	1.75	38.88	54.45	22.23
2X10	43.64	1.75	45.65	54.45	22.05

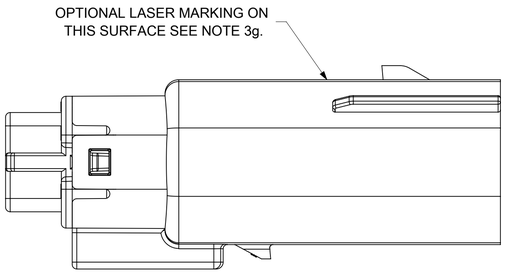

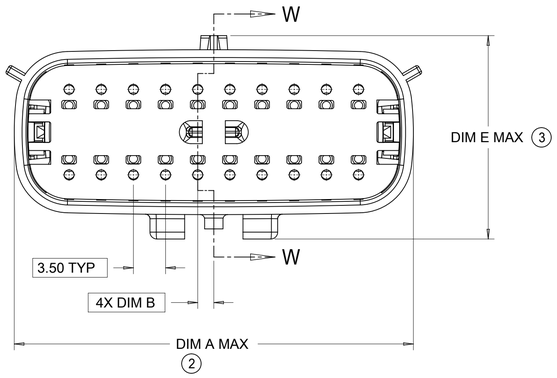

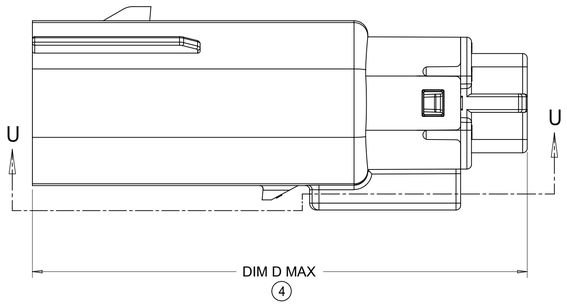

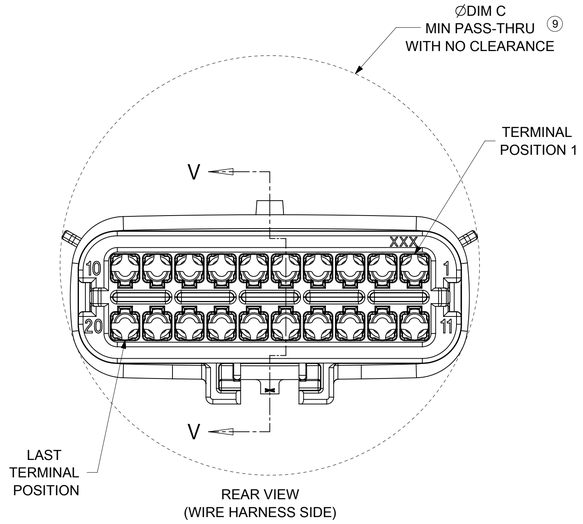

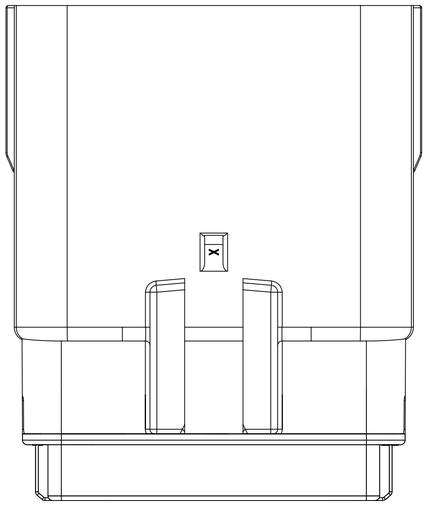

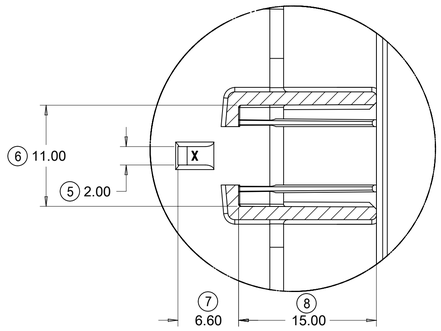

PartialU-U
SCALE 3:1

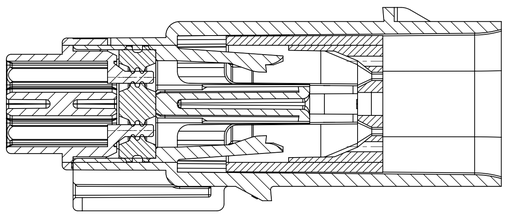

PRIMARY LOCK REINFORCEMENT (PLR) SHOWN
IN PRE-STAGED POSITION

SECTION W-W

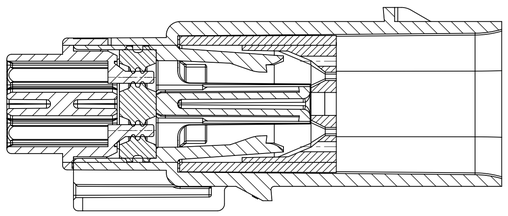

PRIMARY LOCK REINFORCEMENT (PLR) SHOWN
IN FINAL-LOCK POSITION

SECTION V-V

SYMBOLS	
A	= 0
B	= 0
D	= 0
E	= 0
	= 0
C	= 0
	= 0
	= 0
	= 0

THIS DRAWING CONTAINS INFORMATION THAT IS PROPRIETARY TO MOLEX ELECTRONIC TECHNOLOGIES, LLC AND SHOULD NOT BE USED WITHOUT WRITTEN PERMISSION

DIMENSION UNITS	SCALE
mm	3:1

GENERAL TOLERANCES (UNLESS SPECIFIED)		
ANGULAR TOL	±	1.0 °
4 PLACES	±	
3 PLACES	±	
2 PLACES	±	0.1
1 PLACE	±	0.2
0 PLACES	±	

DRAFT WHERE APPLICABLE MUST REMAIN WITHIN DIMENSIONS

CURRENT REV DESC:

EC NO: 171650
DRWN: PMANJUNATHAC 2018/01/03
CHK'D: MVANSLAMBROU 2018/02/16
APPR: MVANSLAMBROU 2018/02/16

INITIAL REVISION:
DRWN: APROFFITT 2014/04/28
APPR: VKOSHY 2014/05/14

THIRD ANGLE PROJECTION | DRAWING: A1-SIZE | SERIES: 33482

molex

MX150 BLADE
DUAL ROW SEALED ASSEMBLY MAT SEAL

PRODUCT CUSTOMER DRAWING

DOCUMENT NUMBER	DOC TYPE	DOC PART	REVISION
SD-33482-0001	PSD	001	E2

MATERIAL NUMBER	CUSTOMER	SHEET NUMBER
	GENERAL MARKET	5 OF 11

DOCUMENT STATUS	P1	RELEASE DATE	2018/02/16 22:02:26

PCBNEXT: master-tb-prod-A1
Page Size: A1-SIZE
Date/Time: 2017/10/06

SHEET DESCRIPTION
SYSTEM PACKAGING

CHARTED DIMENSION				
CKT	BLADE CONFIGURATION	RECEPTACLE CONFIGURATION	DIMENSIONS	
			K	L
2X2	STANDARD	W/O CLIPSLOT	72.78	28.00
		W/ CLIPSLOT	72.78	28.50
		LENGTHENED	77.21	28.00
2X3	STANDARD	W/O CLIPSLOT	72.78	28.00
		W/ CLIPSLOT		30.50
	LENGTHENED	W/O CLIPSLOT	74.79	28.00
		W/ CLIPSLOT		30.50
2X4	STANDARD	W/O CLIPSLOT	72.78	29.50
		W/ CLIPSLOT		31.50
2X6	STANDARD	W/O CLIPSLOT	72.79	35.58
		W/ CLIPSLOT		
2X8	STANDARD	W/O CLIPSLOT	72.67	42.25
		W/ CLIPSLOT		
2X10	STANDARD	STANDARD	72.78	49.05

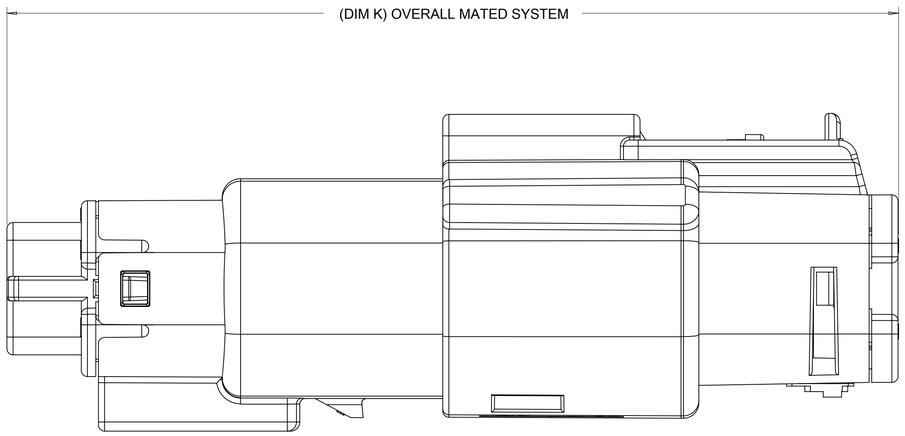

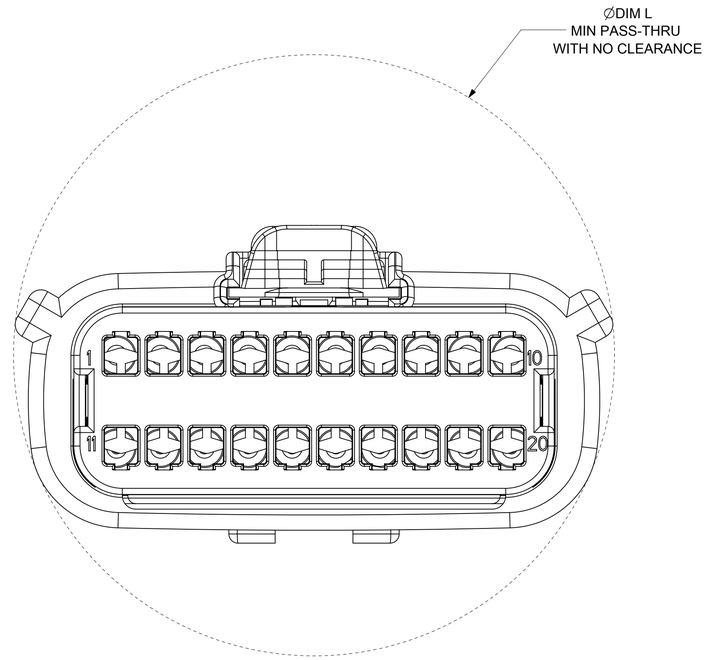

SYMBOLS	
A	= 0
C	= 0
D	= 0
S	= 0
	= 0
C	= 0
	= 0
	= 0
V	= 0

THIS DRAWING CONTAINS INFORMATION THAT IS PROPRIETARY TO MOLEX ELECTRONIC TECHNOLOGIES, LLC AND SHOULD NOT BE USED WITHOUT WRITTEN PERMISSION

DIMENSION UNITS	SCALE
mm	4:1

GENERAL TOLERANCES (UNLESS SPECIFIED)		
ANGULAR TOL	±	1.0 °
4 PLACES	±	
3 PLACES	±	
2 PLACES	±	0.1
1 PLACE	±	0.2
0 PLACES	±	

DRAFT WHERE APPLICABLE MUST REMAIN WITHIN DIMENSIONS

CURRENT REV DESC:

EC NO: 171650
DRWN: PMANJUNATHAC 2018/01/03
CHK'D: MVANSLAMBROU 2018/02/16
APPR: MVANSLAMBROU 2018/02/16

INITIAL REVISION:
DRWN: APROFFITT 2014/04/28
APPR: VKOSHY 2014/05/14

THIRD ANGLE PROJECTION | DRAWING: A1-SIZE | SERIES: 33482

molex

MX150 BLADE
DUAL ROW SEALED ASSEMBLY MAT SEAL

PRODUCT CUSTOMER DRAWING

DOCUMENT NUMBER	DOC TYPE	DOC PART	REVISION
SD-33482-0001	PSD	001	E2

MATERIAL NUMBER	CUSTOMER	SHEET NUMBER
	GENERAL MARKET	6 OF 11

DOCUMENT STATUS	P1	RELEASE DATE	2018/02/16 22:02:26

TEMPLATE FORMAT: A1-SIZE
REVISION: H
DATE: 2017/10/06

SHEET DESCRIPTION
BACKSHELL NOTES

BACKSHELL NOTES: VALID UNLESS OTHERWISE SPECIFIED

1. GENERAL:
a. APPLICATION SPECIFICATION SEE: AS-34951-001
-DESIGNED TO MATE WITH BLADE SEALED ASSEMBLY
SPECIFIED IN MOLEX DRAWING SD-33482-0001.
-SYSTEM TO BE USED WITH WIRE WITHIN DIAMETER RANGE OF 1.2mm TO 2.69mm.
-COMPONENTS ARE OPTIONAL AND MUST BE PURCHASED SEPERATELY.
-DESIGN IS OWNED BY SCHLEMMER FOR SCHLEMMER BACKSHELL.
-DESIGN IS OWNED BY MOLEX FOR MOLEX BACKSHELL.
-90˝ ADAPTOR DESIGN IS OWNED BY MOLEX.
-FOR ADDITIONAL INFORMATION SEE THE BACKSHELL COMPONENT DRAWING SD-34950-0001.

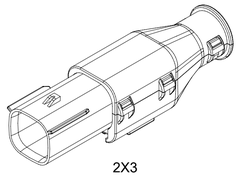

2X3

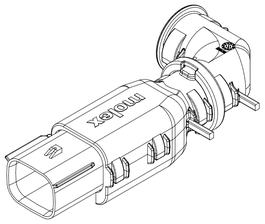

2X4

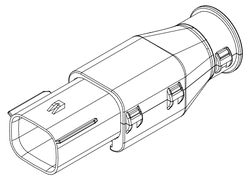

2X4

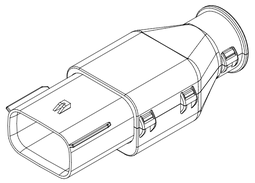

2X6

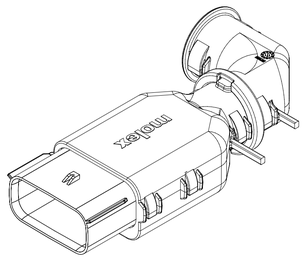

2X8

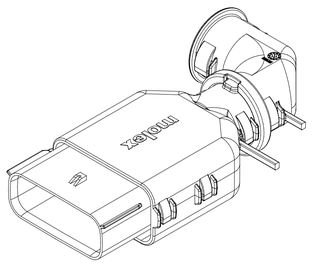

2X10

BACKSHELL CUSTOMER
MODEL NUMBER LEGEND

34950-XXXX

CUSTOMER MODEL COMPONENTS
- 0 - SCHLEMMER BACKSHELL ONLY
- 1 - SCHLEMMER BACKSHELL & MX150 HOUSING KEY A ASSEMBLY
- 2 - SCHLEMMER BACKSHELL & MX150 HOUSING KEY B ASSEMBLY
- 3 - SCHLEMMER BACKSHELL & MX150 HOUSING KEY C ASSEMBLY
- 4 - SCHLEMMER BACKSHELL & MX150 HOUSING KEY D ASSEMBLY
- 5 - MOLEX BACKSHELL ONLY
- 6 - MOLEX BACKSHELL & MX150 HOUSING KEY A ASSEMBLY
- 7 - MOLEX BACKSHELL & MX150 HOUSING KEY B ASSEMBLY
- 8 - MOLEX BACKSHELL & MX150 HOUSING KEY C ASSEMBLY
- 9 - MOLEX BACKSHELL & MX150 HOUSING KEY D ASSEMBLY

BACKSHELL FEATURES
- 1 - WITH RIBS
- 2 - WITHOUT RIBS
- 3 - 90˝ ADAPTOR

MX150 CIRCUIT SIZE 04, 06, 08, 12, 16, 20

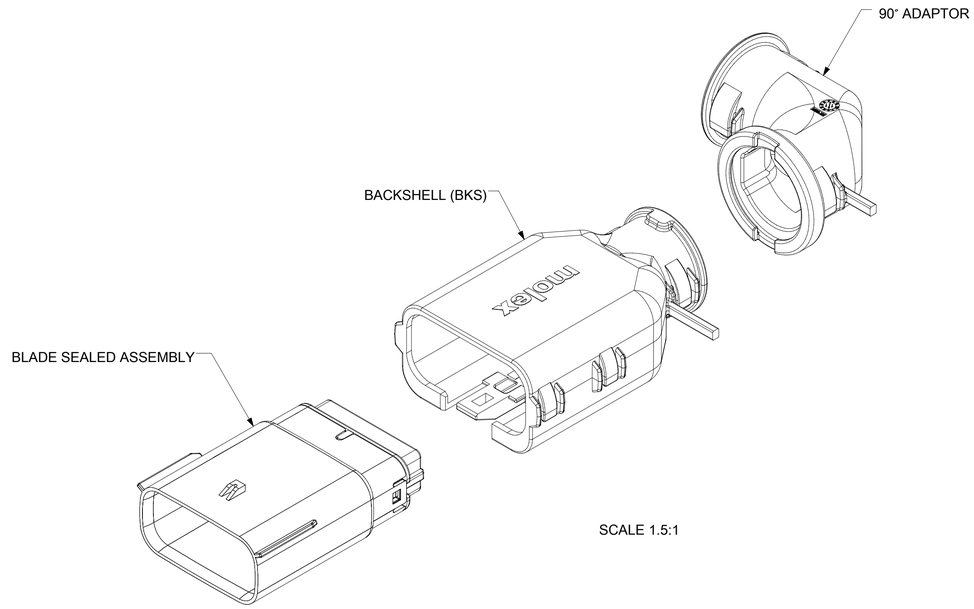

SCALE 1.5:1

THIS DRAWING CONTAINS INFORMATION THAT IS PROPRIETARY TO MOLEX ELECTRONIC TECHNOLOGIES, LLC AND SHOULD NOT BE USED WITHOUT WRITTEN PERMISSION

SYMBOLS	DIMENSION UNITS	SCALE
= 0	mm	1.5:1
= 0	GENERAL TOLERANCES (UNLESS SPECIFIED)	
= 0	ANGULAR TOL	± 1.0 °
= 0	4 PLACES	±
= 0	3 PLACES	±
= 0	2 PLACES	± 0.1
= 0	1 PLACE	± 0.2
= 0	0 PLACES	±
= 0	DRAFT WHERE APPLICABLE MUST REMAIN WITHIN DIMENSIONS	

CURRENT REV DESC:

EC NO: 171650
DRWN: PMANJUNATHAC 2018/01/03
CHK'D: MVANSLAMBROU 2018/02/16
APPR: MVANSLAMBROU 2018/02/16

INITIAL REVISION:
DRWN: APROFFITT 2014/04/28
APPR: VKOSHY 2014/05/14

THIRD ANGLE PROJECTION | DRAWING: A1-SIZE | SERIES: 33482

molex

MX150 BLADE
DUAL ROW SEALED ASSEMBLY MAT SEAL

PRODUCT CUSTOMER DRAWING

DOCUMENT NUMBER	DOC TYPE	DOC PART	REVISION
SD-33482-0001	PSD	001	E2

MATERIAL NUMBER	CUSTOMER	SHEET NUMBER
	GENERAL MARKET	7 OF 11

DOCUMENT STATUS	P1	RELEASE DATE	2018/02/16 22:02:26

FORMAT: molex-tb-print-A1-
DEVIATION: N
DATE: 2017/10/06

SHEET DESCRIPTION
SCHLEMMER BACKSHELL

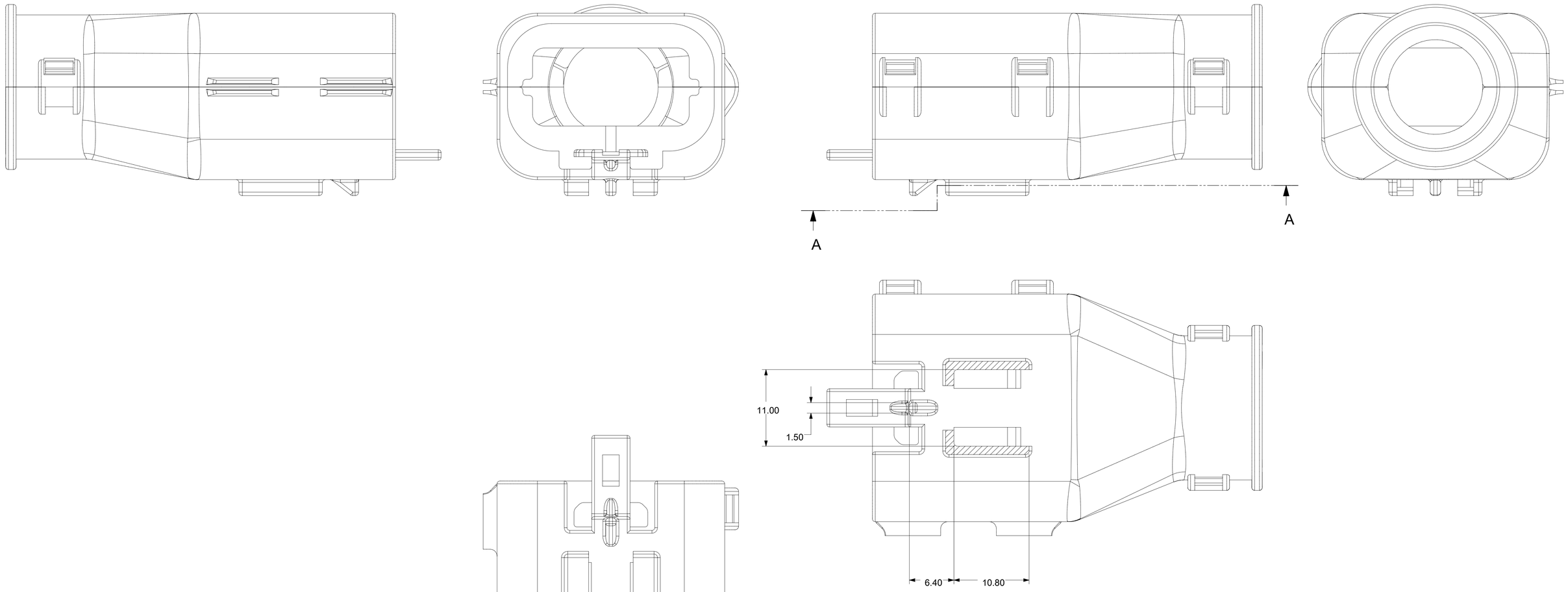

SECTION A-A

SYMBOLS	THIS DRAWING CONTAINS INFORMATION THAT IS PROPRIETARY TO MOLEX ELECTRONIC TECHNOLOGIES, LLC AND SHOULD NOT BE USED WITHOUT WRITTEN PERMISSION			
A = 0	DIMENSION UNITS: mm	SCALE: 3.5:1	CURRENT REV DESC:	molex
C = 0	GENERAL TOLERANCES (UNLESS SPECIFIED)			
E = 0	ANGULAR TOL ± 1.0 °		EC NO: 171650	MX150 BLADE DUAL ROW SEALED ASSEMBLY MAT SEAL
S = 0	4 PLACES ±		DRWN: PMANJUNATHAC 2018/01/03	
▼ = 0	3 PLACES ±		CHK'D: MVANSLAMBROU 2018/02/16	
C = 0	2 PLACES ± 0.1		APPR: MVANSLAMBROU 2018/02/16	PRODUCT CUSTOMER DRAWING
☒ = 0	1 PLACE ± 0.2		INITIAL REVISION:	DOCUMENT NUMBER: SD-33482-0001 / DOC TYPE: PSD / DOC PART: 001 / REVISION: E2
■ = 0	0 PLACES ±		DRWN: APROFFITT 2014/04/28	
V = 0	DRAFT WHERE APPLICABLE MUST REMAIN WITHIN DIMENSIONS		APPR: VKOSHY 2014/05/14	
			THIRD ANGLE PROJECTION / DRAWING: A1-SIZE / SERIES: 33482	MATERIAL NUMBER / CUSTOMER: GENERAL MARKET / SHEET NUMBER: 8 OF 11

DOCUMENT STATUS	P1	RELEASE DATE	2018/02/16 22:02:26

TEMPLATE: PRODUCT DRAWING
REV HISTORY: A
DATE: 2017/10/06

SHEET DESCRIPTION
MOLEX BACKSHELL

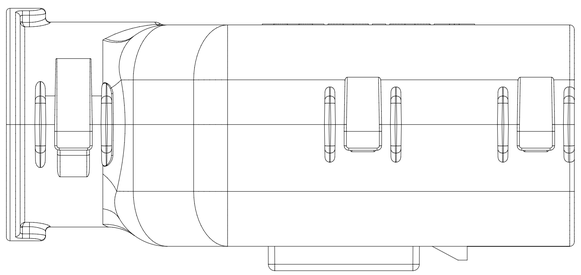

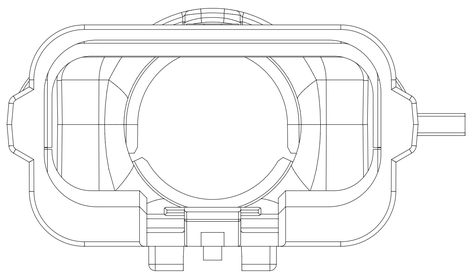

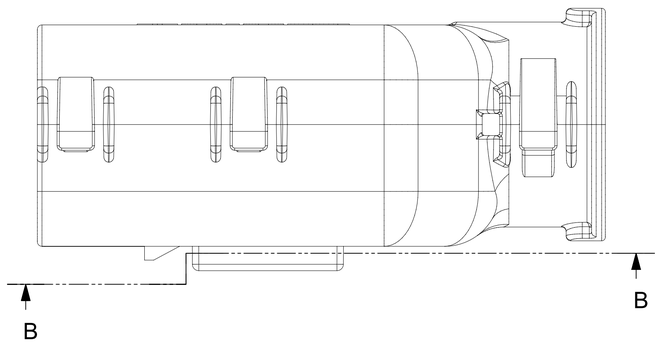

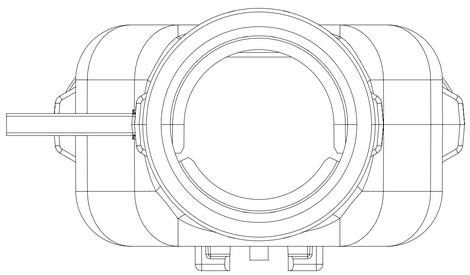

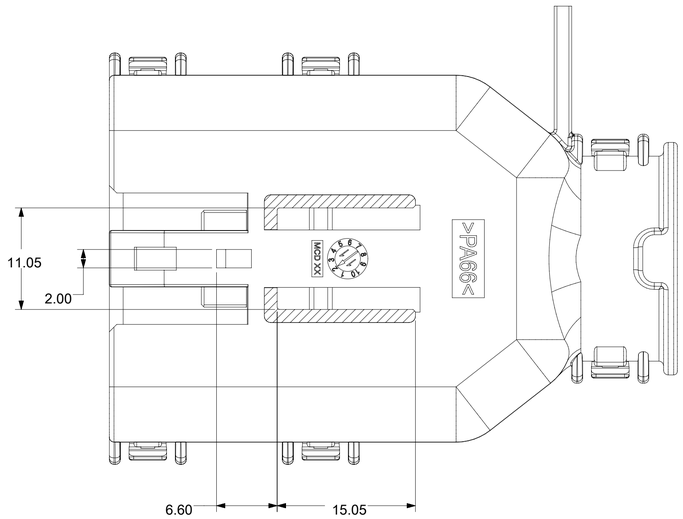

SECTION B-B

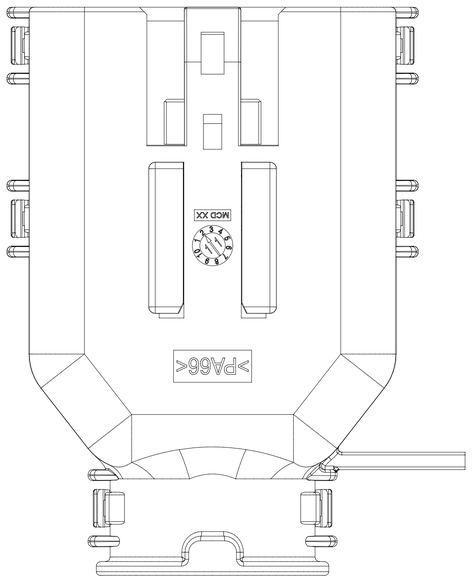

SYMBOLS	
A = 0	
C = 0	
F = 0	
S = 0	
= 0	
C = 0	
= 0	
= 0	
= 0	

THIS DRAWING CONTAINS INFORMATION THAT IS PROPRIETARY TO MOLEX ELECTRONIC TECHNOLOGIES, LLC AND SHOULD NOT BE USED WITHOUT WRITTEN PERMISSION

DIMENSION UNITS	SCALE
mm	3:1

GENERAL TOLERANCES (UNLESS SPECIFIED)		
ANGULAR TOL	±	1.0 °
4 PLACES	±	
3 PLACES	±	
2 PLACES	±	0.1
1 PLACE	±	0.2
0 PLACES	±	

DRAFT WHERE APPLICABLE MUST REMAIN WITHIN DIMENSIONS

CURRENT REV DESC:

EC NO: 171650
DRWN: PMANJUNATHAC 2018/01/03
CHK'D: MVANSLAMBROU 2018/02/16
APPR: MVANSLAMBROU 2018/02/16

INITIAL REVISION:
DRWN: APROFFITT 2014/04/28
APPR: VKOSHY 2014/05/14

THIRD ANGLE PROJECTION | DRAWING: A1-SIZE | SERIES: 33482

molex

MX150 BLADE
DUAL ROW SEALED ASSEMBLY MAT SEAL

PRODUCT CUSTOMER DRAWING

DOCUMENT NUMBER	DOC TYPE	DOC PART	REVISION
SD-33482-0001	PSD	001	E2

MATERIAL NUMBER	CUSTOMER	SHEET NUMBER
	GENERAL MARKET	9 OF 11

DOCUMENT STATUS	P1	RELEASE DATE	2018/02/16 22:02:26

TEMPLATE: master-landscape
REVISION: H
DATE: 2017/10/05

SHEET DESCRIPTION
SCHLEMMER BACKSHELL CONFIGURATIONS

CHARTED DIMENSIONS

CKT	BLADE CONFIGURATION	RECEPTACLE CONFIGURATION	DIMENSIONS M	N	P	R	T
2X3	STANDARD	STANDARD	106.83	32.75	31.75	29.00	29.50
	LENGTHENED		108.71				
2X4	STANDARD	STANDARD	106.83	33.50	31.90	30.70	30.70
2X6	STANDARD	STANDARD	106.83	37.84	37.27	35.83	36.83

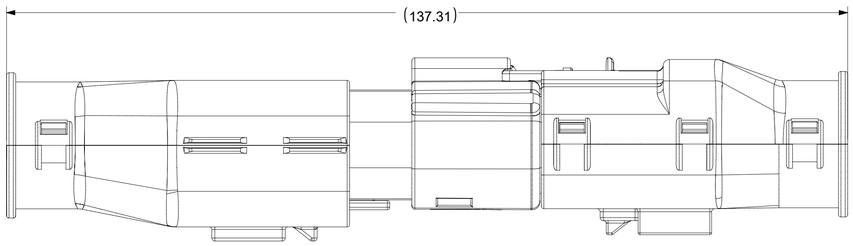

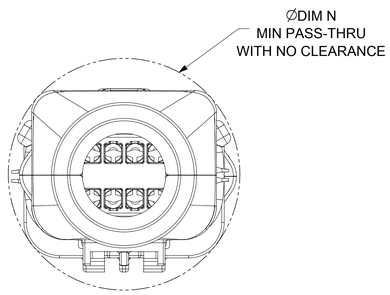

OVERALL MATED SYSTEM WITH BLADE AND RECEPTACLE BACKSHELL

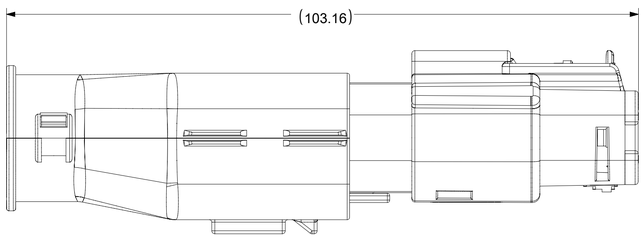

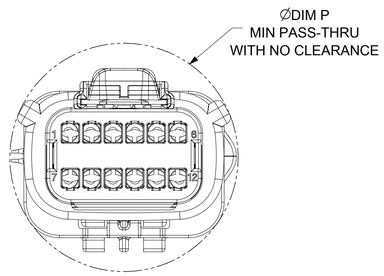

OVERALL MATED SYSTEM WITH BLADE BACKSHELL

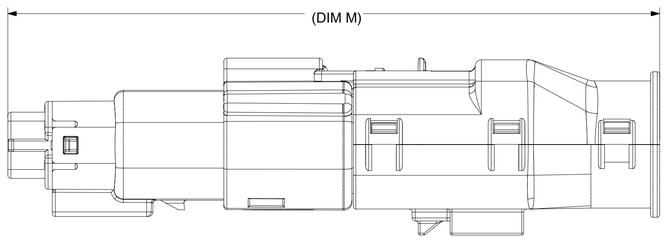

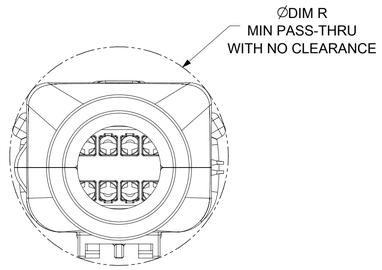

OVERALL MATED SYSTEM WITH RECEPTACLE BACKSHELL

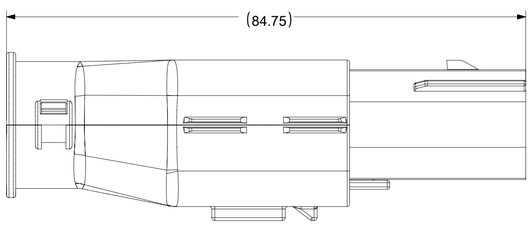

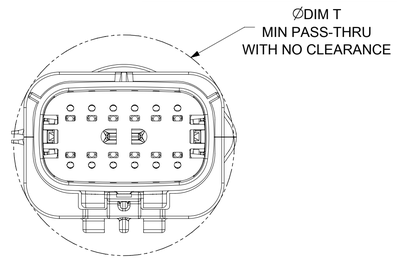

BLADE SEALED ASSEMBLY WITH BLADE BACKSHELL

SYMBOLS	DIMENSION UNITS	SCALE
= 0	mm	2:1
= 0	GENERAL TOLERANCES (UNLESS SPECIFIED)	
= 0	ANGULAR TOL	± 1.0 °
= 0	4 PLACES	±
= 0	3 PLACES	±
= 0	2 PLACES	± 0.1
= 0	1 PLACE	± 0.2
= 0	0 PLACES	±
= 0	DRAFT WHERE APPLICABLE MUST REMAIN WITHIN DIMENSIONS	

THIS DRAWING CONTAINS INFORMATION THAT IS PROPRIETARY TO MOLEX ELECTRONIC TECHNOLOGIES, LLC AND SHOULD NOT BE USED WITHOUT WRITTEN PERMISSION

CURRENT REV DESC:

EC NO: 171650
DRWN: PMANJUNATHAC 2018/01/03
CHK'D: MVANSLAMBROU 2018/02/16
APPR: MVANSLAMBROU 2018/02/16

INITIAL REVISION:
DRWN: APROFFITT 2014/04/28
APPR: VKOSHY 2014/05/14

THIRD ANGLE PROJECTION | DRAWING: A1-SIZE | SERIES: 33482

molex

MX150 BLADE
DUAL ROW SEALED ASSEMBLY MAT SEAL

PRODUCT CUSTOMER DRAWING

DOCUMENT NUMBER	DOC TYPE	DOC PART	REVISION
SD-33482-0001	PSD	001	E2

MATERIAL NUMBER	CUSTOMER	SHEET NUMBER
	GENERAL MARKET	10 OF 11

DOCUMENT STATUS	P1	RELEASE DATE	2018/02/16 22:02:26

FORMAT: master-tb-print-A1
DATE: 2018-01-11
DATE: 2017-10-06

SHEET DESCRIPTION
MOLEX BACKSHELL CONFIGURATIONS

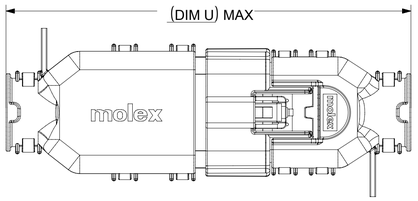

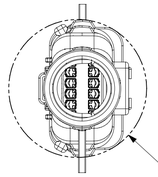

MIN PASS-THRU
WITH NO CLEARANCE

OVERALL MATED SYSTEM WITH BLADE AND RECEPTACLE BACKSHELL

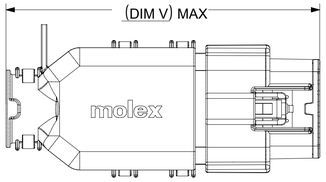

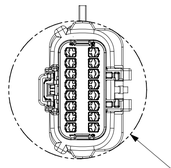

MIN PASS-THRU
WITH NO CLEARANCE

OVERALL MATED SYSTEM WITH BLADE BACKSHELL

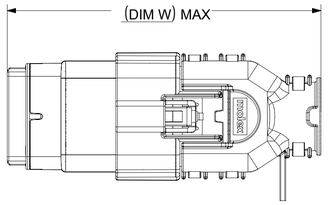

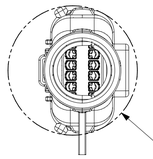

MIN PASS-THRU
WITH NO CLEARANCE

OVERALL MATED SYSTEM WITH RECEPTACLE BACKSHELL

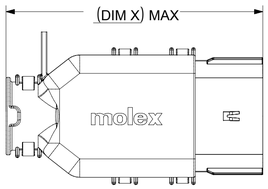

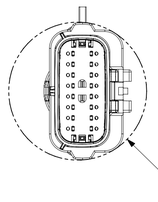

MIN PASS-THRU
WITH NO CLEARANCE

BLADE SEALED ASSEMBLY WITH BLADE BACKSHELL

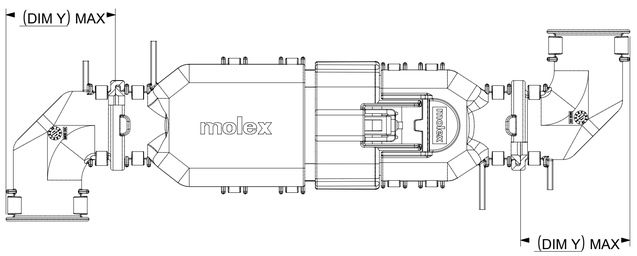

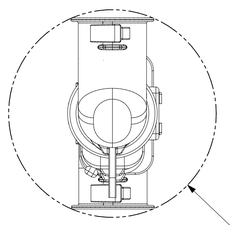

MIN PASS-THRU
WITH NO CLEARANCE

ADD THE VALUE OF 'Y' TO THE TOTAL DIMENSION
WHENEVER ADAPTOR IS USED

CHARTED DIMENSIONS

CKT	BLADE CONFIGURATION	RECEPTACLE CONFIGURATION	DIMENSIONS									
			U	V	W	X	Y	AA	AB	AC	AD	AE
2X4	STANDARD	STANDARD	115.24	94.36	93.93	75.62	32.10	32.93	32.54	32.85	31.76	56.81
2X8	STANDARD	STANDARD	132.49	102.81	102.73	84.07	36.10	45.44	45.44	42.65	45.44	68.18
2X10	STANDARD	STANDARD	132.49	102.81	102.73	84.07	36.10	45.44	45.44	42.65	45.44	68.18

SYMBOLS	
= 0	
= 0	
= 0	
= 0	
= 0	
= 0	
= 0	
= 0	
= 0	

THIS DRAWING CONTAINS INFORMATION THAT IS PROPRIETARY TO MOLEX ELECTRONIC TECHNOLOGIES, LLC AND SHOULD NOT BE USED WITHOUT WRITTEN PERMISSION

DIMENSION UNITS	SCALE
mm	1:1

GENERAL TOLERANCES (UNLESS SPECIFIED)		
ANGULAR TOL	±	1.0 °
4 PLACES	±	
3 PLACES	±	
2 PLACES	±	0.1
1 PLACE	±	0.2
0 PLACES	±	

DRAFT WHERE APPLICABLE MUST REMAIN WITHIN DIMENSIONS

CURRENT REV DESC:

EC NO: 171650
DRWN: PMANJUNATHAC 2018/01/03
CHK'D: MVANSLAMBROU 2018/02/16
APPR: MVANSLAMBROU 2018/02/16

INITIAL REVISION:
DRWN: APROFFITT 2014/04/28
APPR: VKOSHY 2014/05/14

THIRD ANGLE PROJECTION | DRAWING: A1-SIZE | SERIES: 33482

molex

MX150 BLADE
DUAL ROW SEALED ASSEMBLY MAT SEAL

PRODUCT CUSTOMER DRAWING

DOCUMENT NUMBER	DOC TYPE	DOC PART	REVISION
SD-33482-0001	PSD	001	E2

MATERIAL NUMBER	CUSTOMER	SHEET NUMBER
	GENERAL MARKET	11 OF 11

DOCUMENT STATUS	P1	RELEASE DATE	2018/02/16 22:02:26

molex

a AEZ[illegible]Eわ [! 59{9! [95 ! {{9a . [Ða ! ¤ {9! [
. ha ! b5 t Lb h- ¤ {I 99¤

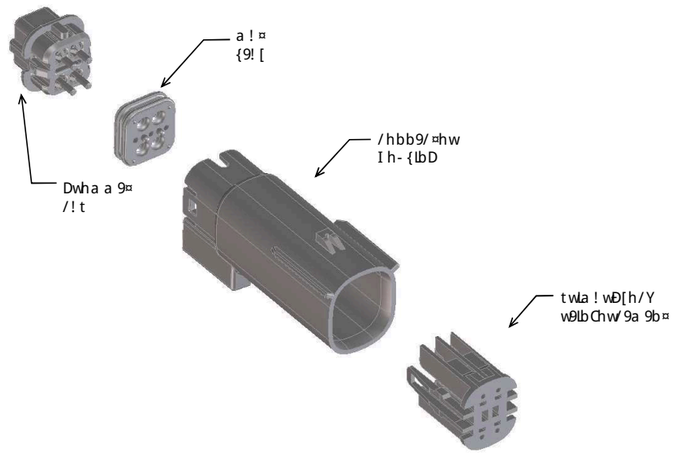

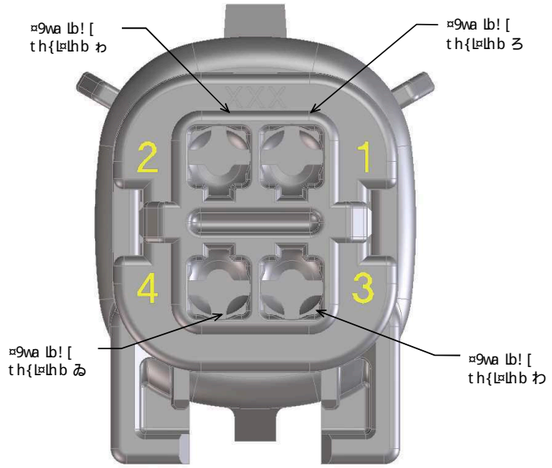

Chw! 55l=lhb! [lbChwa ! ¤lhb {99 {5 [illegible]

! . . wØ¹ l! ¤lhb	59{/ wLt ¤lhb	/ h[hw	a ! ¤9wL! [
! ⊡[Y	I h- {lbD ¤Y9DLbD ht ¤lhb !	. [! / Y	{t{ ⊥bE[hb DC#[illegible]
. ⊡D	I h- {lbD ¤Y9DLbD ht ¤lhb .	[lDI ¤ DwL £	{t{ ⊥bE[hb DC#[illegible]
/ ⊡w	I h- {lbD ¤Y9DLbD ht ¤lhb /	. wh° b	{t{ ⊥bE[hb DC#[illegible]
5 ⊡Dw	I h- {lbD ¤Y9DLbD ht ¤lhb 5	DwØ9b	{t{ ⊥bE[hb DC#[illegible]
/ ⊡5D	I h- {lbD ¤Y9DLbD ht ¤lhb /	5! wY DwL £	{t{ ⊥bE[hb DC#[illegible]
5 ⊡D	I h- {lbD ¤Y9DLbD ht ¤lhb 5	{¤hb9 DwL £	{t{ ⊥bE[hb DC#[illegible]
! ⊡P	I h- {lbD ¤Y9DLbD ht ¤lhb !	ÐØ[[h°	{t{ ⊥bE[hb DC#[illegible]
D/t	Dwha a 9¤ / ! t t[- DD95、	. [! / Y	{t{ ⊥bE[hb DC#[illegible]
D/h	Dwha a 9¤ / ! t ht9b、	. [! / Y	{t{ ⊥bE[hb DC#[illegible]
t[w	t[w	b! ¤- wL [	{t{ ⊥bE[hb DC#[illegible]
a	a ! ¤ {9! [	whÐ! [. [- 9	LbI 9wØb¤[ÐØ[- . wL/ ! ¤95 {l[l/ hb9

! {{9a . [Ð59{/ wLt ¤lhb	! {{9a . [Ð t! w¤ b- a . 9w	/ha thb9b¤				. [h/Y95 ¤9wa lb! [{											{¤! ¤- {	/ha a 9b¤{	ht ¤lhb! [! ¤¤! ¤/I a 9b¤{ {h[5 {9t 9wL ¤9[Ð	
		¤I 9 t wØ{9b/9 hC! b ! . . wØ¹ l! ¤lhb lb5L/! ¤9{ ¤I 9 t wØ{9b/9 hC ¤I ! ¤/ha thb9b¤☆				/! ¹ L=Ð° L=I ! b- a . 9wlb5L/! ¤9{ . [h/Y95 ¤9wa lb! [th{l=lhb /! ¹ L=Ð° L=I h- ¤! b- a . 9wlb5L/! ¤9{ ht9b ¤9wa lb! [th{l=lhb														
		I h- {lbD Y9DL⊥h[hw	Dwha a 9¤ / ! t	t[w	a ! ¤ {9! [	ろ	わ	わ	を										.! / Y{I 9[[° L=I wL {	.! / Y{I 9[[° L=I h- ¤ wL {
Y9Ð! ⊡[! / Y	わたらわれた	! ⊡[Y	D/h	t[w	a												{! [9! . [9			
Y9Ð. ⊡[lDI ¤ DwL £	わたらわれた	. ⊡D	D/h	t[w	a												{! [9! . [9			
Y9Ð/ ⊡wh° b	わたらわれた	/ ⊡w	D/h	t[w	a												bh ¤ wØ/ ha a 9b595	{99 わたらわれた		
Y9Ð5 ⊡Dw9b	わたらわれた	5 ⊡Dw	D/h	t[w	a												bh ¤ wØ/ ha a 9b595	{99 わたらわれた		
Y9Ð! ⊡[! / Y	わたらわれた	! ⊡[Y	D/t	t[w	a		を										{! [9! . [9			
Y9Ð. ⊡[lDI ¤ DwL £	わたらわれた	. ⊡D	D/t	t[w	a		を										{! [9! . [9			
Y9Ð/ ⊡wh° b	わたらわれた	/ ⊡w	D/t	t[w	a		を										bh ¤ wØ/ ha a 9b595	{99 わたらわれた		
Y9Ð5 ⊡Dw9b	わたらわれた	5 ⊡Dw	D/t	t[w	a		を										bh ¤ wØ/ ha a 9b595	{99 わたらわれた		
Y9Ð! ⊡[! / Y	わたらわれた	! ⊡[Y	D/t	t[w	a		を	わ									{! [9! . [9			
Y9Ð. ⊡[lDI ¤ DwL £	わたらわれた	. ⊡D	D/t	t[w	a		を	わ									{! [9! . [9			
Y9Ð/ ⊡wh° b	わたらわれた	/ ⊡w	D/t	t[w	a		を	わ									bh ¤ wØ/ ha a 9b595	{99 わたらわれた		
Y9Ð5 ⊡Dw9b	わたらわれた	5 ⊡Dw	D/t	t[w	a		を	わ									bh ¤ wØ/ ha a 9b595	{99 わたらわれた		
Y9Ð! ⊡[! / Y	わたらわれた	! ⊡[Y	D/t	t[w	a	ろ	を	わ	を								{! [9! . [9			
Y9Ð. ⊡[lDI ¤ DwL £	わたらわれた	. ⊡D	D/t	t[w	a	ろ	を	わ	を								{! [9! . [9			
Y9Ð/ ⊡wh° b	わたらわれた	/ ⊡w	D/t	t[w	a	ろ	を	わ	を								bh ¤ wØ/ ha a 9b595	{99 わたらわれた		
Y9Ð5 ⊡Dw9b	わたらわれた	5 ⊡Dw	D/t	t[w	a	ろ	を	わ	を								bh ¤ wØ/ ha a 9b595	{99 わたらわれた		
Y9Ð! ⊡[! / Y	わたらわれた	! ⊡[Y	D/t	t[w	a	ろ	を	わ									{! [9! . [9			
Y9Ð. ⊡[lDI ¤ DwL £	わたらわれた	. ⊡D	D/t	t[w	a	ろ	を	わ									{! [9! . [9			
Y9Ð/ ⊡wh° b	わたらわれた	/ ⊡w	D/t	t[w	a	ろ	を	わ	を								bh ¤ wØ/ ha a 9b595	{99 わたらわれた		
Y9Ð5 ⊡Dw9b	わたらわれた	5 ⊡Dw	D/t	t[w	a	ろ	を	わ	を								bh ¤ wØ/ ha a 9b595	{99 わたらわれた		
Y9Ð! ⊡[! / Y	わたらわれた	! ⊡[Y	D/t	t[w	a		を		を								{! [9! . [9			
Y9Ð! ¤ÐØ[[h°	わたらわれた	! ⊡P	D/h	t[w	a												{! [9! . [9			
Y9Ð. ⊡[lDI ¤ DwL £	わたらわれた	. ⊡D	D/t	t[w	a	ろ											{! [9! . [9			
Y9Ð! ⊡[! / Y	わたらわれた	! ⊡[Y	D/t	t[w	a	ろ		わ									{! [9! . [9			
Y9Ð/ ⊡wh° b	わたらわれた	/ ⊡w	D/t	t[w	a		を		を								{! [9! . [9			
Y9Ð. ⊡[lDI ¤ DwL £	わたらわれた	. ⊡D	D/t	t[w	a		を		を								{! [9! . [9			
Y9Ð. ⊡[lDI ¤ DwL £	わたらわれた	. ⊡D	D/t	t[w	a				を								{! [9! . [9			
Y9Ð! ⊡[! / Y	わたらわれた	! ⊡[Y	D/t	t[w	a	ろ			を								{! [9! . [9			

9/ b bh ☆[illegible]
5! ¤9 [illegible]

5h/ - a 9b¤ bh ☆{5 [illegible]わ

wØ¹ l{lhb ∂! 3わ
t! D9∂ ろhC わん

molex

a ÆÞ¾¼ÌÁ¤Ã¤ [! 59{9! [95 ! {{9a . [Ða ! ¤ {9! [. ha ! b5 t Lb h- ¤ {I 99¤

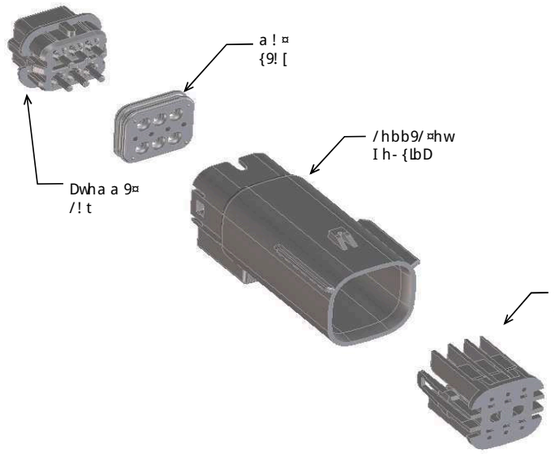

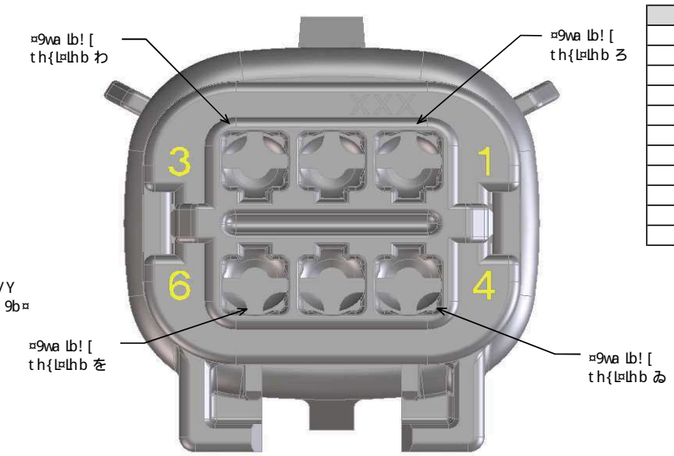

! . . wØ¹ L! ¤lhb	59{/wLt ¤lhb	/h[hw	a ! ¤9wL! [
! ⊡[Y	I h- {lbD¤¥9ÐlbD ht ¤lhb !	. [! /Y	{t{ ⊥bÐ[hb DC#ｵ
. ⊡D	I h- {lbD¤¥9ÐlbD ht ¤lhb .	[lDI ¤ DwL £	{t{ ⊥bÐ[hb DC#ｵ
/ ⊡w	I h- {lbD¤¥9ÐlbD ht ¤lhb /	. wh° b	{t{ ⊥bÐ[hb DC#ｵ
5 ⊡Dw	I h- {lbD¤¥9ÐlbD ht ¤lhb 5	DwØ9b	{t{ ⊥bÐ[hb DC#ｵ
/ ⊡5D	I h- {lbD¤¥9ÐlbD ht ¤lhb /	5! wY DwL £	{t{ ⊥bÐ[hb DC#ｵ
5 ⊡D	I h- {lbD¤¥9ÐlbD ht ¤lhb 5	{¤hb9 DwL £	{t{ ⊥bÐ[hb DC#ｵ
! ⊡P	I h- {lbD¤¥9ÐlbD ht ¤lhb !	ÐØ[[h°	{t{ ⊥bÐ[hb DC#ｵ
D/	Dwha a 9¤ /! t {¤! b5! w5、	. [! /Y	{t{ ⊥bÐ[hb DC#ｵ
D/[	Dwha a 9¤ /! t [9bD¤I 9b95、	. [! /Y	{t{ ⊥bÐ[hb DC#ｵ
t[w	t[w	b! ¤- wL [	{t{ ⊥bÐ[hb DC#ｵ
a	a ! ¤ {9! [	whÐ! [. [- 9	LbI 9wØb¤[ÐØ[- . wL/! ¤95 {l[L/hb9

Chw! 55L¤lhb! [lbChwa ! ¤lhb {99 {5 ⊡わあうぇおかきくけこ

! {{9a . [Ð59{/wLt ¤lhb	! {{9a . [Ð t! w¤ b- a . 9w	/ha thb9b¤																{¤! ¤- {	/ha a 9b¤{	ht ¤lhb! [! ¤¤! ¤/I a 9b¤{ {h[5 {9t 9wL ¤9[Ð	
		¤I 9 t wØ{9b/9 hC! b! . . wØ¹ L! ¤lhb lb5L/! ¤9{ ¤I 9 t wØ{9b/9 hC¤I ! ¤/ha thb9b¤☆				. [h/Y95 ¤9wa lb! [{ /! ¹ L¤Ð° L¤I ! b- a . 9wlb5L/! ¤9{ . [h/Y95 ¤9wa lb! [th{l¤lhb /! ¹ L¤Ð° L¤I h- ¤! b- a . 9wlb5L/! ¤9{ ht9b ¤9wa lb! [th{l¤lhb															
		I h- {lbD Y9Ð⊥h[hw	Dwha a 9¤ /! t	t[w	a ! ¤ {9! [	ろ	わ	わ	ゐ	ゑ	を									. ! /Y{I 9[[° L¤I wL {	. ! /Y{I 9[[° L¤I h- ¤ wL {
Y9Ð! ¤¢[! /Y	わあうぇおかきくけこ	! ⊡[Y	D/	t[w	a													{! [9! . [9		わあうぇおかきくけこ	わあうぇおかきくけこ
Y9Ð. ¤£[DI ¤ DwL £	わあうぇおかきくけこ	. ⊡D	D/	t[w	a													{! [9! . [9		わあうぇおかきくけこ	わあうぇおかきくけこ
Y9Ð/ ¤¢ wh° b	わあうぇおかきくけこ	/ ⊡w	D/	t[w	a													bh ¤ wØ/ha a 9b595	{99 わあうぇおかきくけこ	わあうぇおかきくけこ	わあうぇおかきくけこ
Y9Ð5 ¤Ðw99b	わあうぇおかきくけこ	5 ⊡w	D/	t[w	a													bh ¤ wØ/ha a 9b595	{99 わあうぇおかきくけこ	わあうぇおかきくけこ	わあうぇおかきくけこ
¹ h l5 Y9£	わあうぇおかきくけこ																				
Y9Ð! ¤¢[! /Y	わあうぇおかきくけこ	! ⊡[Y	D/	t[w	a			わ										{! [9! . [9		わあうぇおかきくけこ	わあうぇおかきくけこ
Y9Ð. ¤£[DI ¤ DwL £	わあうぇおかきくけこ	. ⊡D	D/	t[w	a			わ										{! [9! . [9		わあうぇおかきくけこ	わあうぇおかきくけこ
Y9Ð/ ¤¢ wh° b	わあうぇおかきくけこ	/ ⊡w	D/	t[w	a			わ										bh ¤ wØ/ha a 9b595	{99 わあうぇおかきくけこ	わあうぇおかきくけこ	わあうぇおかきくけこ
Y9Ð5 ¤Ðw99b	わあうぇおかきくけこ	5 ⊡w	D/	t[w	a			わ										bh ¤ wØ/ha a 9b595	{99 わあうぇおかきくけこ	わあうぇおかきくけこ	わあうぇおかきくけこ
¹ h l5 Y9£	わあうぇおかきくけこ																				
Y9Ð! ¤¢[! /Y	わあうぇおかきくけこ	! ⊡[Y	D/	t[w	a			わ	ゑ									{! [9! . [9		わあうぇおかきくけこ	わあうぇおかきくけこ
Y9Ð. ¤£[DI ¤ DwL £	わあうぇおかきくけこ	. ⊡D	D/	t[w	a			わ	ゑ									{! [9! . [9		わあうぇおかきくけこ	わあうぇおかきくけこ
Y9Ð/ ¤¢ wh° b	わあうぇおかきくけこ	/ ⊡w	D/	t[w	a			わ	ゑ									bh ¤ wØ/ha a 9b595	{99 わあうぇおかきくけこ	わあうぇおかきくけこ	わあうぇおかきくけこ
Y9Ð5 ¤Ðw99b	わあうぇおかきくけこ	5 ⊡w	D/	t[w	a			わ	ゑ									bh ¤ wØ/ha a 9b595	{99 わあうぇおかきくけこ	わあうぇおかきくけこ	わあうぇおかきくけこ
¹ h l5 Y9£	わあうぇおかきくけこ																				
Y9Ð! ¤¢[! /Y	わあうぇおかきくけこ	! ⊡[Y	D/	t[w	a			わ										{! [9! . [9		わあうぇおかきくけこ	わあうぇおかきくけこ
Y9Ð! ¤¢[! /Y	わあうぇおかきくけこ	! ⊡[Y	D/	t[w	a		わ											{! [9! . [9		わあうぇおかきくけこ	わあうぇおかきくけこ
Y9Ð! ¤¢[! /Y	わあうぇおかきくけこ	! ⊡[Y	D/	t[w	a					ゑ	そ							{! [9! . [9		わあうぇおかきくけこ	わあうぇおかきくけこ
Y9Ð! ¤¢[! /Y	わあうぇおかきくけこ	! ⊡[Y	D/	t[w	a		わ	わ	ゑ	ゑ								{! [9! . [9		わあうぇおかきくけこ	わあうぇおかきくけこ
Y9Ð! ¤¢[! /Y	わあうぇおかきくけこ	! ⊡[Y	D/	t[w	a	ゑ	わ	わ	ゑ	ゑ	そ							{! [9! . [9		わあうぇおかきくけこ	わあうぇおかきくけこ
Y9Ð! ¤¢[! /Y	わあうぇおかきくけこ	! ⊡[Y	D/	t[w	a	ゑ			ゑ	ゑ								{! [9! . [9		わあうぇおかきくけこ	わあうぇおかきくけこ
Y9Ð! ¤¢[! /Y	わあうぇおかきくけこ	! ⊡[Y	D/	t[w	a				ゑ	ゑ	そ							{! [9! . [9		わあうぇおかきくけこ	わあうぇおかきくけこ
Y9Ð! ¤¢[! /Y	わあうぇおかきくけこ	! ⊡[Y	D/	t[w	a				ゑ	ゑ								{! [9! . [9		わあうぇおかきくけこ	わあうぇおかきくけこ
Y9Ð! ¤¢[! /Y	わあうぇおかきくけこ	! ⊡[Y	D/	t[w	a						そ							{! [9! . [9		わあうぇおかきくけこ	わあうぇおかきくけこ
Y9Ð. ¤£[DI ¤ DwL £	わあうぇおかきくけこ	. ⊡D	D/	t[w	a	ゑ			ゑ									{! [9! . [9		わあうぇおかきくけこ	わあうぇおかきくけこ
Y9Ð! ¤¢[! /Y	わあうぇおかきくけこ	! ⊡[Y	D/	t[w	a	ゑ	わ	わ	ゑ									{! [9! . [9		わあうぇおかきくけこ	わあうぇおかきくけこ
Y9Ð! ¤¢[! /Y	わあうぇおかきくけこ	! ⊡[Y	D/	t[w	a		わ	わ	ゑ	ゑ	そ							{! [9! . [9		わあうぇおかきくけこ	わあうぇおかきくけこ
Y9Ð/ ¤5! wY DwL Ð	わあうぇおかきくけこ	/ ⊡5D	D/	t[w	a													{! [9! . [9		わあうぇおかきくけこ	わあうぇおかきくけこ
Y9Ð5 ¤{¤hb9 DwL £	わあうぇおかきくけこ	5 ⊡D	D/	t[w	a													{! [9! . [9		わあうぇおかきくけこ	わあうぇおかきくけこ
Y9Ð! ¤¢[! /Y	わあうぇおかきくけこ	! ⊡[Y	D/	t[w	a			わ			そ							{! [9! . [9		わあうぇおかきくけこ	わあうぇおかきくけこ
Y9Ð! ¤¢[! /Y	わあうぇおかきくけこ	! ⊡[Y	D/[	t[w	a													{! [9! . [9		わあうぇおかきくけこ	わあうぇおかきくけこ
Y9Ð. ¤£[DI ¤ DwL £	わあうぇおかきくけこ	. ⊡D	D/[	t[w	a													{! [9! . [9		わあうぇおかきくけこ	わあうぇおかきくけこ
Y9Ð/ ¤5! wY DwL Ð	わあうぇおかきくけこ	/ ⊡5D	D/[	t[w	a													{! [9! . [9		わあうぇおかきくけこ	わあうぇおかきくけこ
Y9Ð5 ¤{¤hb9 DwL £	わあうぇおかきくけこ	5 ⊡D	D/[	t[w	a													{! [9! . [9		わあうぇおかきくけこ	わあうぇおかきくけこ
Y9Ð/ ¤5! wY DwL Ð	わあうぇおかきくけこ	/ ⊡5D	D/[	t[w	a			わ										{! [9! . [9		わあうぇおかきくけこ	わあうぇおかきくけこ
Y9Ð! ¤¢[! /Y	わあうぇおかきくけこ	! ⊡[Y	D/[	t[w	a			わ										{! [9! . [9		わあうぇおかきくけこ	わあうぇおかきくけこ
Y9Ð! ¤¢[! /Y	わあうぇおかきくけこ	! ⊡[Y	D/	t[w	a		ゑ				そ							{! [9! . [9		わあうぇおかきくけこ	わあうぇおかきくけこ
Y9Ð/ ¤5! wY DwL Ð	わあうぇおかきくけこ	/ ⊡5D	D/	t[w	a			わ										{! [9! . [9		わあうぇおかきくけこ	わあうぇおかきくけこ
Y9Ð! ¤¢[! /Y	わあうぇおかきくけこ	! ⊡[Y	D/[	t[w	a	ゑ	ゑ	わ	ゑ	ゑ	そ							{! [9! . [9		わあうぇおかきくけこ	わあうぇおかきくけこ
Y9Ð! ¤¢[! /Y	わあうぇおかきくけこ	! ⊡[Y	D/	t[w	a				ゑ									{! [9! . [9		わあうぇおかきくけこ	わあうぇおかきくけこ
Y9Ð5 ¤{¤hb9 DwL £	わあうぇおかきくけこ	5 ⊡D	D/	t[w	a			わ										{! [9! . [9		わあうぇおかきくけこ	わあうぇおかきくけこ
Y9Ð/ ¤5! wY DwL Ð	わあうぇおかきくけこ	/ ⊡5D	D/	t[w	a			わ	ゑ									{! [9! . [9		わあうぇおかきくけこ	わあうぇおかきくけこ
Y9Ð5 ¤{¤hb9 DwL £	わあうぇおかきくけこ	5 ⊡D	D/	t[w	a			わ	ゑ									{! [9! . [9		わあうぇおかきくけこ	わあうぇおかきくけこ
Y9Ð! ¤Ð9[[h°	わあうぇおかきくけこ	! ⊡P	D/	t[w	a													{! [9! . [9		わあうぇおかきくけこ	わあうぇおかきくけこ
Y9Ð! ¤¢[! /Y	わあうぇおかきくけこ	! ⊡[Y	D/	t[w	a			わ	ゑ	ゑ	そ							{! [9! . [9		わあうぇおかきくけこ	わあうぇおかきくけこ

molex

a Æ[illegible] [! 59{9! [95 ! {{9a . [Ða ! ¤{9! [. ha ! b5 tLb h- ¤{I 99¤

! {{9a . [Ð59{/wLt ¤Lhb	! {{9a . [Ð t! w¤ b- a . 9w	/ha thb9b¤				. [h/Y95 ¤9wa Lb! [{											{¤! ¤- {	/ha a 9b¤{	ht ¤Lhb! [! ¤¤! ¤/I a 9b¤{ {h[5 {9t 9wL ¤9[Ð	
		¤I 9 t wÐ{9b/9 hC! b! . . wÐ¹ L ¤Lhb Lb5L/! ¤9{ ¤I 9 t wÐ{9b/9 hC¤I ! ¤/ha thb9b¤				/! ¹ L¤Ð° L¤I ! b- a . 9wLb5L/! ¤9{ . [h/Y95 ¤9wa Lb! [th{L¤Lhb /! ¹ L¤Ð° L¤I h- ¤! b- a . 9wLb5L/! ¤9{ ht 9b ¤9wa Lb! [th{L¤Lhb															
		I h- {LbD Y9Ð.⅟h[hw	Dwha a 9¤ /! t	t[w	a ! ¤{9! [	ろ	わ	わ	ゐ	ゑ	を								.! /Y{I 9[[° L¤I wL {	.! /Y{I 9[[° L¤I h- ¤ wL {
Y9Ð! ¤[! /Y	わあらゆるる	! ⊡[Y	D/	t[w	a		ゎ	わ									{! [9! . [9		わあ ゑゐゐをを	わあ ゑゐゐをを
Y9Ð. ¤[LDI ¤ DwL Ð	わあらゆるゐ	. ⊞D	D/	t[w	a		ゎ	わ									{! [9! . [9		わあ ゑゐゐをを	わあ ゑゐゐをを
Y9Ð/¤5! wY DwL Ð	わあらゆるゑ	/ ⊟D	D/	t[w	a						そ						{! [9! . [9		わあ ゑゐゐをを	わあ ゑゐゐをを
Y9Ð! ¤[! /Y	わあらゆるを	! ⊡[Y	D/	t[w	a				ゐ		そ						{! [9! . [9		わあ ゑゐゐをを	わあ ゑゐゐをを
Y9Ð! ¤[! /Y	わあらゆるゐ	! ⊡[Y	D/	t[w	a	ろ		わ		ゑ							{! [9! . [9		わあ ゑゐゐをを	わあ ゑゐゐをを
Y9Ð! ¤[! /Y	わあらゆるゑ	! ⊡[Y	D/	t[w	a		ゎ		ゐ		そ						{! [9! . [9		わあ ゑゐゐをを	わあ ゑゐゐをを
Y9Ð! ¤[! /Y	わあらゆるを	! ⊡[Y	D/	t[w	a	ろ					そ						{! [9! . [9		わあ ゑゐゐをを	わあ ゑゐゐをを
Y9Ð! ¤[! /Y	わあらゆるゐ	! ⊡[Y	D/	t[w	a		ゎ			ゑ							{! [9! . [9		わあ ゑゐゐをを	わあ ゑゐゐをを
Y9Ð! ¤[! /Y	わあらゆるゑ	! ⊡[Y	D/	t[w	a	ろ		わ	ゐ								{! [9! . [9		わあ ゑゐゐをを	わあ ゑゐゐをを
Y9Ð! ¤[! /Y	わあらゆるを	! ⊡[Y	D/	t[w	a	ろ	ゎ	わ		ゑ	そ						{! [9! . [9		わあ ゑゐゐをを	わあ ゑゐゐをを
Y9Ð! ¤[! /Y	わあらゆるゐ	! ⊡[Y	D/	t[w	a	ろ	ゎ	わ									{! [9! . [9		わあ ゑゐゐをを	わあ ゑゐゐをを
Y9Ð! ¤[! /Y	わあらゆるゑ	! ⊡[Y	D/	t[w	a				ゐ	ゑ							{! [9! . [9		わあ ゑゐゐをを	わあ ゑゐゐをを
Y9Ð. ¤[LDI ¤ DwL Ð	わあらゆるを	. ⊞D	D/	t[w	a	ろ											{! [9! . [9		わあ ゑゐゐをを	わあ ゑゐゐをを
Y9Ð. ¤[LDI ¤ DwL Ð	わあらゆるゐ	. ⊞D	D/	t[w	a					ゑ							{! [9! . [9		わあ ゑゐゐをを	わあ ゑゐゐをを
Y9Ð! ¤[! /Y	わあらゆるゑ	! ⊡[Y	D/	t[w	a	ろ				ゑ							{! [9! . [9		わあ ゑゐゐをを	わあ ゑゐゐをを
Y9Ð! ¤[! /Y	わあらゆるを	! ⊡[Y	D/	t[w	a			わ	ゐ		そ						{! [9! . [9		わあ ゑゐゐをを	わあ ゑゐゐをを
Y9Ð. ¤[LDI ¤ DwL Ð	わあらゆるゐ	. ⊞D	D/	t[w	a					ゑ	そ						{! [9! . [9		わあ ゑゐゐをを	わあ ゑゐゐをを

molex

a ÆZ¾れわÆ[a [! 59{9! [95 ! {{9a . [Ða ! ¤{9! [. ha ! b5 t Lb h- ¤{I 99¤

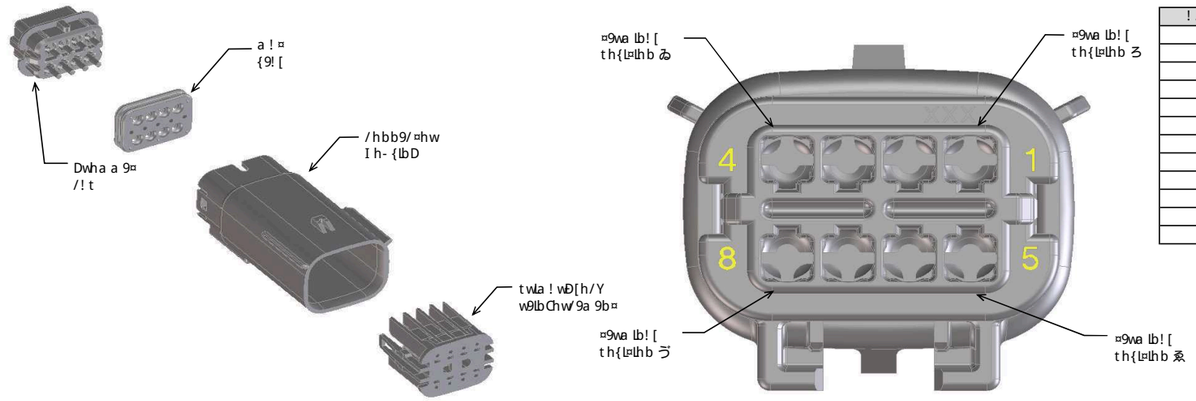

! . . w9' l! ¤lhb	59{/wLt ¤lhb	/h[hw	a ! ¤9wL! [
! ⊡[Y	I h- {lbD¤¥9ÐLbD ht¤lhb !	. [! /Y	{t{ ⊥bÐ[hb DC#/
. ⊡D	I h- {lbD¤¥9ÐLbD ht¤lhb .	[lDI ¤ DwL Ð	{t{ ⊥bÐ[hb DC#/
/ ⊡w	I h- {lbD¤¥9ÐLbD ht¤lhb /	. wh° b	{t{ ⊥bÐ[hb DC#/
5 ⊡Dw	I h- {lbD¤¥9ÐLbD ht¤lhb 5	Dw99b	{t{ ⊥bÐ[hb DC#/
/ ⊡5D	I h- {lbD¤¥9ÐLbD ht¤lhb /	5! wY DwL Ð	{t{ ⊥bÐ[hb DC#/
5 ⊡D	I h- {lbD¤¥9ÐLbD ht¤lhb 5	{¤hb9 DwL Ð	{t{ ⊥bÐ[hb DC#/
! ⊡P	I h- {lbD¤¥9ÐLbD ht¤lhb !	Ð9[[h°	{t{ ⊥bÐ[hb DC#/
D/t	Dwha a 9¤/! t t[- DD95、	. [! /Y	{t{ ⊥bÐ[hb DC#/
D/h	Dwha a 9¤/! t ht9b、	. [! /Y	{t{ ⊥bÐ[hb DC#/
t[w	t[w	b! ¤- wL [	{t{ ⊥bÐ[hb DC#/
a ⊡	a ! ¤{9! [	w- {¤ w95	lbI 9w9b¤[Ð[- . wL/! ¤95 {l[L/hb9
a ⊡	a ! ¤{9! [	whÐ[. [- 9	lbI 9w9b¤[Ð[- . wL/! ¤95 {l[L/hb9

Chw! 55L¤lhb! [lbChwa ! ¤lhb {99 {5 わああああ

! {{9a . [Ð59{/wLt ¤lhb	! {{9a . [Ðt! w¤ b- a . 9w	/ha thb9b¤					. [h/Y95 ¤9wa lb! [{													{¤! ¤- {	/ha a 9b¤{	ht ¤lhb! [! ¤¤! ¤/I a 9b¤{ {h[5 {9t 9wL ¤9[Ð			
		¤I 9 t w9{9b/9 h C! b ! . . w9' l! ¤lhb lb5L/! ¤9{ ¤I 9 t w9{9b/9 h C¤I ! ¤/ha thb9b¤					/! ' L¤Ð° L¤I ! b- a . 9wlb5L/! ¤9{ . [h/Y95 ¤9wa lb! [t h{L¤lhb /! ' L¤Ð° L¤I h- ¤! b- a . 9wlb5L/! ¤9{ ht9b ¤9wa lb! [t h{L¤lhb																				
		I h- {lbD Y9Ð.⊥h[hw	Dwha a 9¤ /! t	t[w	a ! ¤{9! [	ろ	わ	わ	ゐ	ゑ	を	ん	づ														
Y9Ð! ¤[! /Y	わああああ	! ⊡[Y	D/h	t[w	a ⊡															t[! bb95 h. {h[9(/9b/9	{99 わああああ	わゐゑをん	わゐゑをん	わゐゑをん	わゐゑをん
Y9Ð. ¤[lDI ¤ DwL Ð	わああああ	. ⊡D	D/h	t[w	a ⊡															t[! bb95 h. {h[9(/9b/9	{99 わああああ	わゐゑをん	わゐゑをん	わゐゑをん	わゐゑをん
Y9Ð/¤[wh° b	わああああ	/ ⊡w	D/h	t[w	a ⊡															t[! bb95 h. {h[9(/9b/9	{99 わああああ	わゐゑをん	わゐゑをん	わゐゑをん	わゐゑをん
Y9Ð5¤Ðw99b	わああああ	5 ⊡Dw	D/h	t[w	a ⊡															t[! bb95 h. {h[9(/9b/9	{99 わああああ	わゐゑをん	わゐゑをん	わゐゑをん	わゐゑをん
¹ h l5 Y9E	わああああ																											
Y9Ð! ¤[! /Y	わああああ	! ⊡[Y	D/t	t[w	a ⊡				ゐ											t[! bb95 h. {h[9(/9b/9	{99 わああああ	わゐゑをん	わゐゑをん	わゐゑをん	わゐゑをん
Y9Ð. ¤[lDI ¤ DwL Ð	わああああ	. ⊡D	D/t	t[w	a ⊡				ゐ											t[! bb95 h. {h[9(/9b/9	{99 わああああ	わゐゑをん	わゐゑをん	わゐゑをん	わゐゑをん
Y9Ð/¤[wh° b	わああああ	/ ⊡w	D/t	t[w	a ⊡				ゐ											t[! bb95 h. {h[9(/9b/9	{99 わああああ	わゐゑをん	わゐゑをん	わゐゑをん	わゐゑをん
Y9Ð5¤Ðw99b	わああああ	5 ⊡Dw	D/t	t[w	a ⊡				ゐ											t[! bb95 h. {h[9(/9b/9	{99 わああああ	わゐゑをん	わゐゑをん	わゐゑをん	わゐゑをん
¹ h l5 Y9E	わああああ																											
Y9Ð! ¤[! /Y	わああああ	! ⊡[Y	D/t	t[w	a ⊡				ゐ	ゑ										t[! bb95 h. {h[9(/9b/9	{99 わああああ	わゐゑをん	わゐゑをん	わゐゑをん	わゐゑをん
Y9Ð. ¤[lDI ¤ DwL Ð	わああああ	. ⊡D	D/t	t[w	a ⊡				ゐ	ゑ										t[! bb95 h. {h[9(/9b/9	{99 わああああ	わゐゑをん	わゐゑをん	わゐゑをん	わゐゑをん
Y9Ð/¤[wh° b	わああああ	/ ⊡w	D/t	t[w	a ⊡				ゐ	ゑ										t[! bb95 h. {h[9(/9b/9	{99 わああああ	わゐゑをん	わゐゑをん	わゐゑをん	わゐゑをん
Y9Ð5¤Ðw99b	わああああ	5 ⊡Dw	D/t	t[w	a ⊡				ゐ	ゑ										t[! bb95 h. {h[9(/9b/9	{99 わああああ	わゐゑをん	わゐゑをん	わゐゑをん	わゐゑをん
¹ h l5 Y9E	わああああ																											
Y9Ð! ¤[! /Y	わああああ	! ⊡[Y	D/t	t[w	a ⊡	²			ゐ	ゑ										t[! bb95 h. {h[9(/9b/9	{99 わああああ	わゐゑをん	わゐゑをん	わゐゑをん	わゐゑをん
Y9Ð. ¤[lDI ¤ DwL Ð	わああああ	. ⊡D	D/t	t[w	a ⊡	²			ゐ	ゑ										t[! bb95 h. {h[9(/9b/9	{99 わああああ	わゐゑをん	わゐゑをん	わゐゑをん	わゐゑをん
Y9Ð/¤[wh° b	わああああ	/ ⊡w	D/t	t[w	a ⊡	²			ゐ	ゑ										t[! bb95 h. {h[9(/9b/9	{99 わああああ	わゐゑをん	わゐゑをん	わゐゑをん	わゐゑをん
Y9Ð5¤Ðw99b	わああああ	5 ⊡Dw	D/t	t[w	a ⊡	²			ゐ	ゑ										t[! bb95 h. {h[9(/9b/9	{99 わああああ	わゐゑをん	わゐゑをん	わゐゑをん	わゐゑをん
¹ h l5 Y9E	わああああ																											
Y9Ð! ¤[! /Y	わああああ	! ⊡[Y	D/t	t[w	a ⊡	²			ゐ	ゑ				²						t[! bb95 h. {h[9(/9b/9	{99 わああああ	わゐゑをん	わゐゑをん	わゐゑをん	わゐゑをん
Y9Ð. ¤[lDI ¤ DwL Ð	わああああ	. ⊡D	D/t	t[w	a ⊡	²			ゐ	ゑ				²						t[! bb95 h. {h[9(/9b/9	{99 わああああ	わゐゑをん	わゐゑをん	わゐゑをん	わゐゑをん
Y9Ð/¤[wh° b	わああああ	/ ⊡w	D/t	t[w	a ⊡	²			ゐ	ゑ				²						t[! bb95 h. {h[9(/9b/9	{99 わああああ	わゐゑをん	わゐゑをん	わゐゑをん	わゐゑをん
Y9Ð5¤Ðw99b	わああああ	5 ⊡Dw	D/t	t[w	a ⊡	²			ゐ	ゑ				²						t[! bb95 h. {h[9(/9b/9	{99 わああああ	わゐゑをん	わゐゑをん	わゐゑをん	わゐゑをん
¹ h l5 Y9E	わああああ																											
Y9Ð! ¤[! /Y	わああああ	! ⊡[Y	D/t	t[w	a ⊡	²			ゐ	ゑ				²						t[! bb95 h. {h[9(/9b/9	{99 わああああ	わゐゑをん	わゐゑをん	わゐゑをん	わゐゑをん
Y9Ð. ¤[lDI ¤ DwL Ð	わああああ	. ⊡D	D/t	t[w	a ⊡	²			ゐ	ゑ				²						t[! bb95 h. {h[9(/9b/9	{99 わああああ	わゐゑをん	わゐゑをん	わゐゑをん	わゐゑをん
Y9Ð/¤[wh° b	わああああ	/ ⊡w	D/t	t[w	a ⊡	²			ゐ	ゑ				²						t[! bb95 h. {h[9(/9b/9	{99 わああああ	わゐゑをん	わゐゑをん	わゐゑをん	わゐゑをん
Y9Ð5¤Ðw99b	わああああ	5 ⊡Dw	D/t	t[w	a ⊡	²			ゐ	ゑ				²						t[! bb95 h. {h[9(/9b/9	{99 わああああ	わゐゑをん	わゐゑをん	わゐゑをん	わゐゑをん
¹ h l5 Y9E	わああああ																											
Y9Ð! ¤[! /Y	わああああ	! ⊡[Y	D/t	t[w	a ⊡	²			ゐ	ゑ				²						t[! bb95 h. {h[9(/9b/9	{99 わああああ	わゐゑをん	わゐゑをん	わゐゑをん	わゐゑをん
Y9Ð. ¤[lDI ¤ DwL Ð	わああああ	. ⊡D	D/t	t[w	a ⊡	²			ゐ	ゑ				²						t[! bb95 h. {h[9(/9b/9	{99 わああああ	わゐゑをん	わゐゑをん	わゐゑをん	わゐゑをん
Y9Ð/¤[wh° b	わああああ	/ ⊡w	D/t	t[w	a ⊡	²			ゐ	ゑ				²						t[! bb95 h. {h[9(/9b/9	{99 わああああ	わゐゑをん	わゐゑをん	わゐゑをん	わゐゑをん
Y9Ð5¤Ðw99b	わああああ	5 ⊡Dw	D/t	t[w	a ⊡	²			ゐ	ゑ				²						t[! bb95 h. {h[9(/9b/9	{99 わああああ	わゐゑをん	わゐゑをん	わゐゑをん	わゐゑをん
¹ h l5 Y9E	わああああ																											
Y9Ð! ¤[! /Y	わああああ	! ⊡[Y	D/t	t[w	a ⊡	²			ゐ	ゑ				²						t[! bb95 h. {h[9(/9b/9	{99 わああああ	わゐゑをん	わゐゑをん	わゐゑをん	わゐゑをん
Y9Ð. ¤[lDI ¤ DwL Ð	わああああ	. ⊡D	D/t	t[w	a ⊡	²			ゐ	ゑ				²						t[! bb95 h. {h[9(/9b/9	{99 わああああ	わゐゑをん	わゐゑをん	わゐゑをん	わゐゑをん
Y9Ð/¤[wh° b	わああああ	/ ⊡w	D/t	t[w	a ⊡	²			ゐ	ゑ				²						t[! bb95 h. {h[9(/9b/9	{99 わああああ	わゐゑをん	わゐゑをん	わゐゑをん	わゐゑをん
Y9Ð5¤Ðw99b	わああああ	5 ⊡Dw	D/t	t[w	a ⊡	²			ゐ	ゑ				²						t[! bb95 h. {h[9(/9b/9	{99 わああああ	わゐゑをん	わゐゑをん	わゐゑをん	わゐゑをん
¹ h l5 Y9E	わああああ																											
Y9Ð! ¤[! /Y	わああああ	! ⊡[Y	D/t	t[w	a ⊡	²			ゐ	ゑ				²						t[! bb95 h. {h[9(/9b/9	{99 わああああ	わゐゑをん	わゐゑをん	わゐゑをん	わゐゑをん
Y9Ð. ¤[lDI ¤ DwL Ð	わああああ	. ⊡D	D/t	t[w	a ⊡	²			ゐ	ゑ				²						t[! bb95 h. {h[9(/9b/9	{99 わああああ	わゐゑをん	わゐゑをん	わゐゑをん	わゐゑをん
Y9Ð! ¤[! /Y	わああああ	! ⊡[Y	D/t	t[w	a ⊡	²			ゐ	ゑ				²						t[! bb95 h. {h[9(/9b/9	{99 わああああ	わゐゑをん	わゐゑをん	わゐゑをん	わゐゑをん
Y9Ð. ¤[lDI ¤ DwL Ð	わああああ	. ⊡D	D/t	t[w	a ⊡	²			ゐ	ゑ				²						t[! bb95 h. {h[9(/9b/9	{99 わああああ	わゐゑをん	わゐゑをん	わゐゑをん	わゐゑをん
Y9Ð! ¤Ð9[[h°	わああああ	! ⊡P	D/t	t[w	a ⊡	²			ゐ											t[! bb95 h. {h[9(/9b/9	{99 わああああ	わゐゑをん	わゐゑをん	わゐゑをん	わゐゑをん
Y9Ð! ¤Ð9[[h°	わああああ	! ⊡P	D/h	t[w	a ⊡															t[! bb95 h. {h[9(/9b/9	{99 わああああ	わゐゑをん	わゐゑをん	わゐゑをん	わゐゑをん
Y9Ð/¤5! wY DwL Ð	わああああ	/ ⊡5D	D/h	t[w	a ⊡															t[! bb95 h. {h[9(/9b/9	{99 わああああ	わゐゑをん	わゐゑをん	わゐゑをん	わゐゑをん

9/b bh ゐゑをんづ
5! ¤9 ろづろんゐわわれ

5h/- a 9b¤ bh ゐ(5 わああああわ

w9' l(lhb ゐ/! ろわ
t! D9ゐhC わん

a ÆΞ気れゎÆゐ [! 59{9! [95 ! {{9a . [Ða ! ¤{9! [
. ha ! b5 tLb h- ¤{I 99¤

! {{9a . [Ð59{/wLt¤Lhb	! {{9a . [Ðt! w¤ b- a . 9w	/ha thb9b¤ ¤I 9twÐ{9b/9hC! b! . . w9¹ L! ¤Lhb Lb5L/! ¤9{ ¤I 9 twÐ{9b/9hC¤I ! ¤/ha thb9b¤				. [h/Y95 ¤9wa Lb! [{ /! ¹ L¤Ð° L¤I ! b- a . 9wLb5L/! ¤9{ . [h/Y95 ¤9wa Lb! [th{L¤Lhb /! ¹ L¤Ð° L¤I h- ¤! b- a . 9wLb5L/! ¤9{ ht9b ¤9wa Lb! [th{L¤Lhb											{¤! ¤- {	/ha a 9b¤{	ht¤Lhb! [! ¤¤! ¤/I a 9b¤{ {h[5 {9t9w! ¤9[Ð			
		I h- {LbD Y9Ð/Lh[hw	Dwha a 9¤ /! t	t[w	a ! ¤{9! [	ろ	ゎ	わ	ゐ	ゑ	を	ん	ゔ						. ! /Y{I 9[[° L¤I wL {	. ! /Y{I 9[[° L¤I h- ¤ wL {	れ! 5! t¤hw° L¤I wL {	れ! 5! t¤hw ° L¤I h- ¤ wL {
Y9Ð5¤{¤hb9DwL £	わわゐうわわご気	5 [D	D/h	t[w	a W												t[! bb95 h. {h[9{/9b/9	{99 わわゐうわゐう気	わゐ 気わわごぞぞ	わゐ 気わわごぅぞ	わゐ 気ろわわざぇ	わゐ 気ろわわごゐぞ
Y9Ð! ¤[! /Y	わわゐうわわご気ゐ	! □[Y	D/t	t[w	a W	ミ	ォ	オ	ð								t[! bb95 h. {h[9{/9b/9	{99 わわゐうわゐう気ゐ	わゐ 気わわごぞぞ	わゐ 気わわごぅぞ	わゐ 気ろわわざぇ	わゐ 気ろわわごゐぞ
Y9Ð! ¤[! /Y	わわゐうわわご気ゑ	! □[Y	D/t	t[w	a W	ミ	ォ			ゑ	を	ん	ニ				t[! bb95 h. {h[9{/9b/9	{99 わわゐうわゐう気ゑ	わゐ 気わわごぞぞ	わゐ 気わわごぅぞ	わゐ 気ろわわざぇ	わゐ 気ろわわごゐぞ
Y9Ð! ¤[! /Y	わわゐうわわご気ぞ	! □[Y	D/t	t[w	a W	ミ	ォ										t[! bb95 h. {h[9{/9b/9	{99 わわゐうわゐう気ぞ	わゐ 気わわごぞぞ	わゐ 気わわごぅぞ	わゐ 気ろわわざぇ	わゐ 気ろわわごゐぞ
Y9Ð! ¤[! /Y	わわゐうわわご気ん	! □[Y	D/t	t[w	a W	ミ	ォ	オ		ゑ							t[! bb95 h. {h[9{/9b/9	{99 わわゐうわゐう気ん	わゐ 気わわごぞぞ	わゐ 気わわごぅぞ	わゐ 気ろわわざぇ	わゐ 気ろわわごゐぞ
Y9Ð! ¤[! /Y	わわゐうわわご気ニ	! □[Y	D/t	t[w	a W	ミ	ォ	オ	ð	ゑ			ニ				t[! bb95 h. {h[9{/9b/9	{99 わわゐうわゐう気ニ	わゐ 気わわごぞぞ	わゐ 気わわごぅぞ	わゐ 気ろわわざぇ	わゐ 気ろわわごゐぞ
Y9Ð! ¤[! /Y	わわゐうわわご気	! □[Y	D/t	t[w	a W	ミ		オ		ゑ	を	ん					t[! bb95 h. {h[9{/9b/9	{99 わわゐうわゐう気	わゐ 気わわごぞぞ	わゐ 気わわごぅぞ	わゐ 気ろわわざぇ	わゐ 気ろわわごゐぞ
Y9Ð! ¤[! /Y	わわゐうわわごぞオ	! □[Y	D/t	t[w	a W	ミ	ォ	オ	ð	ゑ	を						t[! bb95 h. {h[9{/9b/9	{99 わわゐうわゐうぞオ	わゐ 気わわごぞぞ	わゐ 気わわごぅぞ	わゐ 気ろわわざぇ	わゐ 気ろわわごゐぞ
Y9Ð! ¤[! /Y	わわゐうわわごぞぞ	! □[Y	D/t	t[w	a W	ミ	ォ	オ			を						t[! bb95 h. {h[9{/9b/9	{99 わわゐうわゐうぞぞ	わゐ 気わわごぞぞ	わゐ 気わわごぅぞ	わゐ 気ろわわざぇ	わゐ 気ろわわごゐぞ
Y9Ð! ¤[! /Y	わわゐうわわごぞォ	! □[Y	D/t	t[w	a W	ミ					を						t[! bb95 h. {h[9{/9b/9	{99 わわゐうわゐうぞォ	わゐ 気わわごぞぞ	わゐ 気わわごぅぞ	わゐ 気ろわわざぇ	わゐ 気ろわわごゐぞ
Y9Ð! ¤[! /Y	わわゐうわわごぞオ	! □[Y	D/t	t[w	a W	ミ					を	ん	ニ				t[! bb95 h. {h[9{/9b/9	{99 わわゐうわゐうぞオ	わゐ 気わわごぞぞ	わゐ 気わわごぅぞ	わゐ 気ろわわざぇ	わゐ 気ろわわごゐぞ
Y9Ð! ¤[! /Y	わわゐうわわごぞゐ	! □[Y	D/t	t[w	a W			オ	ð	ゑ	を	ん	ニ				t[! bb95 h. {h[9{/9b/9	{99 わわゐうわゐうぞゐ	わゐ 気わわごぞぞ	わゐ 気わわごぅぞ	わゐ 気ろわわざぇ	わゐ 気ろわわごゐぞ
Y9Ð! ¤[! /Y	わわゐうわわごぞゑ	! □[Y	D/t	t[w	a W				ð			ん	ニ				t[! bb95 h. {h[9{/9b/9	{99 わわゐうわゐうぞゑ	わゐ 気わわごぞぞ	わゐ 気わわごぅぞ	わゐ 気ろわわざぇ	わゐ 気ろわわごゐぞ
Y9Ð! ¤[! /Y	わわゐうわわごぞぞ	! □[Y	D/t	t[w	a W				ð	ゑ	を	ん	ニ				t[! bb95 h. {h[9{/9b/9	{99 わわゐうわゐうぞぞ	わゐ 気わわごぞぞ	わゐ 気わわごぅぞ	わゐ 気ろわわざぇ	わゐ 気ろわわごゐぞ
Y9Ð! ¤[! /Y	わわゐうわわごぞん	! □[Y	D/t	t[w	a W		ォ	オ	ð		を	ん	ニ				t[! bb95 h. {h[9{/9b/9	{99 わわゐうわゐうぞん	わゐ 気わわごぞぞ	わゐ 気わわごぅぞ	わゐ 気ろわわざぇ	わゐ 気ろわわごゐぞ
Y9Ð! ¤[! /Y	わわゐうわわごぞニ	! □[Y	D/t	t[w	a W					ゑ	を	ん					t[! bb95 h. {h[9{/9b/9	{99 わわゐうわゐうぞニ	わゐ 気わわごぞぞ	わゐ 気わわごぅぞ	わゐ 気ろわわざぇ	わゐ 気ろわわごゐぞ
Y9Ð! ¤[! /Y	わわゐうわわごぞ	! □[Y	D/t	t[w	a W			オ	ð								t[! bb95 h. {h[9{/9b/9	{99 わわゐうわゐうぞ	わゐ 気わわごぞぞ	わゐ 気わわごぅぞ	わゐ 気ろわわざぇ	わゐ 気ろわわごゐぞ
Y9Ð! ¤[! /Y	わわゐうわわごんオ	! □[Y	D/t	t[w	a W						を	ん	ニ				t[! bb95 h. {h[9{/9b/9	{99 わわゐうわゐうんオ	わゐ 気わわごぞぞ	わゐ 気わわごぅぞ	わゐ 気ろわわざぇ	わゐ 気ろわわごゐぞ
Y9Ð. ¤{LÐI ¤ DwL £	わわゐうわわごんぞ	. [D	D/t	t[w	a W							ん	ニ				t[! bb95 h. {h[9{/9b/9	{99 わわゐうわゐうんぞ	わゐ 気わわごぞぞ	わゐ 気わわごぅぞ	わゐ 気ろわわざぇ	わゐ 気ろわわごゐぞ
Y9Ð! ¤[! /Y	わわゐうわわごんォ	! □[Y	D/t	t[w	a W	ミ							ニ				t[! bb95 h. {h[9{/9b/9	{99 わわゐうわゐうんォ	わゐ 気わわごぞぞ	わゐ 気わわごぅぞ	わゐ 気ろわわざぇ	わゐ 気ろわわごゐぞ
Y9Ð! ¤[! /Y	わわゐうわわごんオ	! □[Y	D/t	t[w	a W						を		ニ				t[! bb95 h. {h[9{/9b/9	{99 わわゐうわゐうんオ	わゐ 気わわごぞぞ	わゐ 気わわごぅぞ	わゐ 気ろわわざぇ	わゐ 気ろわわごゐぞ
Y9Ð! ¤[! /Y	わわゐうわわごんゐ	! □[Y	D/t	t[w	a W		ォ			ゑ							t[! bb95 h. {h[9{/9b/9	{99 わわゐうわゐうんゐ	わゐ 気わわごぞぞ	わゐ 気わわごぅぞ	わゐ 気ろわわざぇ	わゐ 気ろわわごゐぞ
Y9Ð! ¤[! /Y	わわゐうわわごんゑ	! □[Y	D/t	t[w	a W					ゑ							t[! bb95 h. {h[9{/9b/9	{99 わわゐうわゐうんゑ	わゐ 気わわごぞぞ	わゐ 気わわごぅぞ	わゐ 気ろわわざぇ	わゐ 気ろわわごゐぞ
Y9Ð. ¤{LÐI ¤ DwL £	わわゐうわわごんぞ	. [D	D/t	t[w	a W	ミ		オ					ニ				t[! bb95 h. {h[9{/9b/9	{99 わわゐうわゐうんぞ	わゐ 気わわごぞぞ	わゐ 気わわごぅぞ	わゐ 気ろわわざぇ	わゐ 気ろわわごゐぞ
Y9Ð. ¤{LÐI ¤ DwL £	わわゐうわわごんん	. [D	D/t	t[w	a W			オ					ニ				t[! bb95 h. {h[9{/9b/9	{99 わわゐうわゐうんん	わゐ 気わわごぞぞ	わゐ 気わわごぅぞ	わゐ 気ろわわざぇ	わゐ 気ろわわごゐぞ
Y9Ð. ¤{LÐI ¤ DwL £	わわゐうわわごんニ	. [D	D/t	t[w	a W	ミ											t[! bb95 h. {h[9{/9b/9	{99 わわゐうわゐうんニ	わゐ 気わわごぞぞ	わゐ 気わわごぅぞ	わゐ 気ろわわざぇ	わゐ 気ろわわごゐぞ
Y9Ð! ¤[! /Y	わわゐうわわごん	! □[Y	D/t	t[w	a W	ミ	ォ	オ	ð	ゑ		ん					t[! bb95 h. {h[9{/9b/9	{99 わわゐうわゐうん	わゐ 気わわごぞぞ	わゐ 気わわごぅぞ	わゐ 気ろわわざぇ	わゐ 気ろわわごゐぞ
Y9Ð! ¤[! /Y	わわゐうわわごゔオ	! □[Y	D/t	t[w	a W	ミ											t[! bb95 h. {h[9{/9b/9	{99 わわゐうわゐうゔオ	わゐ 気わわごぞぞ	わゐ 気わわごぅぞ	わゐ 気ろわわざぇ	わゐ 気ろわわごゐぞ
Y9Ð! ¤[! /Y	わわゐうわわごゔぞ	! □[Y	D/t	t[w	a W					ゑ			ニ				t[! bb95 h. {h[9{/9b/9	{99 わわゐうわゐうゔぞ	わゐ 気わわごぞぞ	わゐ 気わわごぅぞ	わゐ 気ろわわざぇ	わゐ 気ろわわごゐぞ
Y9Ð! ¤[! /Y	わわゐうわわごゔォ	! □[Y	D/t	t[w	a W				ð		を						t[! bb95 h. {h[9{/9b/9	{99 わわゐうわゐうゔォ	わゐ 気わわごぞぞ	わゐ 気わわごぅぞ	わゐ 気ろわわざぇ	わゐ 気ろわわごゐぞ
Y9Ð! ¤[! /Y	わわゐうわわごゔオ	! □[Y	D/t	t[w	a W	ミ						ん					t[! bb95 h. {h[9{/9b/9	{99 わわゐうわゐうゔオ	わゐ 気わわごぞぞ	わゐ 気わわごぅぞ	わゐ 気ろわわざぇ	わゐ 気ろわわごゐぞ
Y9Ð! ¤[! /Y	わわゐうわわごゔゐ	! □[Y	D/t	t[w	a W	ミ	ォ	オ	ð			ん					t[! bb95 h. {h[9{/9b/9	{99 わわゐうわゐうゔゐ	わゐ 気わわごぞぞ	わゐ 気わわごぅぞ	わゐ 気ろわわざぇ	わゐ 気ろわわごゐぞ
Y9Ð! ¤[! /Y	わわゐうわわごゔゑ	! □[Y	D/t	t[w	a W	ミ	ォ			ゑ	を		ニ				t[! bb95 h. {h[9{/9b/9	{99 わわゐうわゐうゔゑ	わゐ 気わわごぞぞ	わゐ 気わわごぅぞ	わゐ 気ろわわざぇ	わゐ 気ろわわごゐぞ
Y9Ð! ¤[! /Y	わわゐうわわごゔぞ	! □[Y	D/t	t[w	a W		ォ	オ					ニ				t[! bb95 h. {h[9{/9b/9	{99 わわゐうわゐうゔぞ	わゐ 気わわごぞぞ	わゐ 気わわごぅぞ	わゐ 気ろわわざぇ	わゐ 気ろわわごゐぞ
Y9Ð! ¤[! /Y	わわゐうわわごゔん	! □[Y	D/t	t[w	a W	ミ		オ	ð			ん	ニ				t[! bb95 h. {h[9{/9b/9	{99 わわゐうわゐうゔん	わゐ 気わわごぞぞ	わゐ 気わわごぅぞ	わゐ 気ろわわざぇ	わゐ 気ろわわごゐぞ
Y9Ð! ¤[! /Y	わわゐうわわごゔニ	! □[Y	D/t	t[w	a W				ð	ゑ	を						t[! bb95 h. {h[9{/9b/9	{99 わわゐうわゐうゔニ	わゐ 気わわごぞぞ	わゐ 気わわごぅぞ	わゐ 気ろわわざぇ	わゐ 気ろわわごゐぞ
Y9Ð! ¤[! /Y	わわゐうわわごゔ	! □[Y	D/t	t[w	a W	ミ	ォ		ð	ゑ	を		ニ				t[! bb95 h. {h[9{/9b/9	{99 わわゐうわゐうゔ	わゐ 気わわごぞぞ	わゐ 気わわごぅぞ	わゐ 気ろわわざぇ	わゐ 気ろわわごゐぞ
Y9Ð! ¤[! /Y	わわゐうわわご゛ォ	! □[Y	D/t	t[w	a W		ォ	オ		ゑ			ニ				t[! bb95 h. {h[9{/9b/9	{99 わわゐうわゐう゛ォ	わゐ 気わわごぞぞ	わゐ 気わわごぅぞ	わゐ 気ろわわざぇ	わゐ 気ろわわごゐぞ
Y9Ð! ¤[! /Y	わわゐうわわご゛オ	! □[Y	D/t	t[w	a W	ミ	ォ	オ	ð	ゑ		ん	ニ				t[! bb95 h. {h[9{/9b/9	{99 わわゐうわゐう゛オ	わゐ 気わわごぞぞ	わゐ 気わわごぅぞ	わゐ 気ろわわざぇ	わゐ 気ろわわごゐぞ
Y9Ð! ¤[! /Y	わわゐうわわご゛ゐ	! □[Y	D/t	t[w	a W			オ	ð	ゑ		ん					t[! bb95 h. {h[9{/9b/9	{99 わわゐうわゐう゛ゐ	わゐ 気わわごぞぞ	わゐ 気わわごぅぞ	わゐ 気ろわわざぇ	わゐ 気ろわわごゐぞ
Y9Ð! ¤[! /Y	わわゐうわわご゛ゑ	! □[Y	D/t	t[w	a W			オ				ん					t[! bb95 h. {h[9{/9b/9	{99 わわゐうわゐう゛ゑ	わゐ 気わわごぞぞ	わゐ 気わわごぅぞ	わゐ 気ろわわざぇ	わゐ 気ろわわごゐぞ
Y9Ð! ¤[! /Y	わわゐうわわご゛を	! □[Y	D/t	t[w	a W	ミ	ォ		ð	ゑ		ん					t[! bb95 h. {h[9{/9b/9	{99 わわゐうわゐう゛を	わゐ 気わわごぞぞ	わゐ 気わわごぅぞ	わゐ 気ろわわざぇ	わゐ 気ろわわごゐぞ
Y9Ð! ¤[! /Y	わわゐうわわご゛ん	! □[Y	D/t	t[w	a W				ð	ゑ		ん					t[! bb95 h. {h[9{/9b/9	{99 わわゐうわゐう゛ん	わゐ 気わわごぞぞ	わゐ 気わわごぅぞ	わゐ 気ろわわざぇ	わゐ 気ろわわごゐぞ
Y9Ð! ¤[! /Y	わわゐうわわご゛ニ	! □[Y	D/t	t[w	a W		ォ										t[! bb95 h. {h[9{/9b/9	{99 わわゐうわゐう゛ニ	わゐ 気わわごぞぞ	わゐ 気わわごぅぞ	わゐ 気ろわわざぇ	わゐ 気ろわわごゐぞ
Y9Ð! ¤[! /Y	わわゐうわわご゛	! □[Y	D/t	t[w	a W	ミ		オ	ð	ゑ	を	ん	ニ				t[! bb95 h. {h[9{/9b/9	{99 わわゐうわゐう゛	わゐ 気わわごぞぞ	わゐ 気わわごぅぞ	わゐ 気ろわわざぇ	わゐ 気ろわわごゐぞ
Y9Ð! ¤[! /Y	わわゐうわゐうれぞ	! □[Y	D/h	t[w	a □												{! [9! . [9		わゐ 気わわごぞぞ	わゐ 気わわごぅぞ	わゐ 気ろわわざぇ	わゐ 気ろわわごゐぞ
Y9Ð. ¤{LÐI ¤ DwL £	わわゐうわゐうれォ	. [D	D/h	t[w	a □												{! [9! . [9		わゐ 気わわごぞぞ	わゐ 気わわごぅぞ	わゐ 気ろわわざぇ	わゐ 気ろわわごゐぞ
Y9Ð/ ¤wh° b	わわゐうわゐうれオ	/ □w	D/h	t[w	a □												bh¤w9/ha a 9b595	{99 わわゐうわゐう気	わゐ 気わわごぞぞ	わゐ 気わわごぅぞ	わゐ 気ろわわざぇ	わゐ 気ろわわごゐぞ
Y9Ð5¤Dw99b	わわゐうわゐうれゐ	5 Dw	D/h	t[w	a □												bh¤w9/ha a 9b595	{99 わわゐうわゐう気	わゐ 気わわごぞぞ	わゐ 気わわごぅぞ	わゐ 気ろわわざぇ	わゐ 気ろわわごゐぞ
¹ hL5 Y9£	わわゐうわゐうれゑ																					
Y9Ð! ¤[! /Y	わわゐうわゐうれぞ	! □[Y	D/t	t[w	a □				ð								{! [9! . [9		わゐ 気わわごぞぞ	わゐ 気わわごぅぞ	わゐ 気ろわわざぇ	わゐ 気ろわわごゐぞ
Y9Ð. ¤{LÐI ¤ DwL £	わわゐうわゐうれん	. [D	D/t	t[w	a □				ð								{! [9! . [9		わゐ 気わわごぞぞ	わゐ 気わわごぅぞ	わゐ 気ろわわざぇ	わゐ 気ろわわごゐぞ
Y9Ð/ ¤wh° b	わわゐうわゐうれニ	/ □w	D/t	t[w	a □				ð								bh¤w9/ha a 9b595		わゐ 気わわごぞぞ	わゐ 気わわごぅぞ	わゐ 気ろわわざぇ	わゐ 気ろわわごゐぞ
Y9Ð5¤Dw99b	わわゐうわゐうれ	5 Dw	D/t	t[w	a □				ð								bh¤w9/ha a 9b595		わゐ 気わわごぞぞ	わゐ 気わわごぅぞ	わゐ 気ろわわざぇ	わゐ 気ろわわごゐぞ
¹ hL5 Y9£	わわゐうわゐうぞオ																					
Y9Ð! ¤[! /Y	わわゐうわゐうぞぞ	! □[Y	D/t	t[w	a □				ð	ゑ							{! [9! . [9		わゐ 気わわごぞぞ	わゐ 気わわごぅぞ	わゐ 気ろわわざぇ	わゐ 気ろわわごゐぞ
Y9Ð. ¤{LÐI ¤ DwL £	わわゐうわゐうぞォ	. [D	D/t	t[w	a □				ð	ゑ							{! [9! . [9		わゐ 気わわごぞぞ	わゐ 気わわごぅぞ	わゐ 気ろわわざぇ	わゐ 気ろわわごゐぞ
Y9Ð/ ¤wh° b	わわゐうわゐうぞオ	/ □w	D/t	t[w	a □				ð	ゑ							bh¤w9/ha a 9b595		わゐ 気わわごぞぞ	わゐ 気わわごぅぞ	わゐ 気ろわわざぇ	わゐ 気ろわわごゐぞ
Y9Ð5¤Dw99b	わわゐうわゐうぞゐ	5 Dw	D/t	t[w	a □				ð	ゑ							bh¤w9/ha a 9b595		わゐ 気わわごぞぞ	わゐ 気わわごぅぞ	わゐ 気ろわわざぇ	わゐ 気ろわわごゐぞ
¹ hL5 Y9£	わわゐうわゐうぞゑ																					
Y9Ð! ¤[! /Y	わわゐうわゐうぞぞ	! □[Y	D/t	t[w	a □	ミ			ð	ゑ							{! [9! . [9		わゐ 気わわごぞぞ	わゐ 気わわごぅぞ	わゐ 気ろわわざぇ	わゐ 気ろわわごゐぞ
Y9Ð. ¤{LÐI ¤ DwL £	わわゐうわゐうぞん	. [D	D/t	t[w	a □	ミ			ð	ゑ							{! [9! . [9		わゐ 気わわごぞぞ	わゐ 気わわごぅぞ	わゐ 気ろわわざぇ	わゐ 気ろわわごゐぞ
Y9Ð/ ¤wh° b	わわゐうわゐうぞニ	/ □w	D/t	t[w	a □	ミ			ð	ゑ							bh¤w9/ha a 9b595		わゐ 気わわごぞぞ	わゐ 気わわごぅぞ	わゐ 気ろわわざぇ	わゐ 気ろわわごゐぞ
Y9Ð5¤Dw99b	わわゐうわゐうぞ	5 Dw	D/t	t[w	a □	ミ			ð	ゑ							bh¤w9/ha a 9b595		わゐ 気わわごぞぞ	わゐ 気わわごぅぞ	わゐ 気ろわわざぇ	わゐ 気ろわわごゐぞ
¹ hL5 Y9£	わわゐうわゐうわオ																					
Y9Ð! ¤[! /Y	わわゐうわゐうわぞ	! □[Y	D/t	t[w	a □	ミ			ð	ゑ			ニ				{! [9! . [9		わゐ 気わわごぞぞ	わゐ 気わわごぅぞ	わゐ 気ろわわざぇ	わゐ 気ろわわごゐぞ
Y9Ð. ¤{LÐI ¤ DwL £	わわゐうわゐうわォ	. [D	D/t	t[w	a □	ミ			ð	ゑ			ニ				{! [9! . [9		わゐ 気わわごぞぞ	わゐ 気わわごぅぞ	わゐ 気ろわわざぇ	わゐ 気ろわわごゐぞ
Y9Ð/ ¤wh° b	わわゐうわゐうわオ	/ □w	D/t	t[w	a □	ミ			ð	ゑ			ニ				bh¤w9/ha a 9b595		わゐ 気わわごぞぞ	わゐ 気わわごぅぞ	わゐ 気ろわわざぇ	わゐ 気ろわわごゐぞ
Y9Ð5¤Dw99b	わわゐうわゐうわゐ	5 Dw	D/t	t[w	a □	ミ			ð	ゑ			ニ				bh¤w9/ha a 9b595		わゐ 気わわごぞぞ	わゐ 気わわごぅぞ	わゐ 気ろわわざぇ	わゐ 気ろわわごゐぞ
¹ hL5 Y9£	わわゐうわゐうわゑ																					
Y9Ð! ¤[! /Y	わわゐうわゐうわぞ	! □[Y	D/t	t[w	a □	ミ	ォ	オ			を	ん	ニ				{! [9! . [9		わゐ 気わわごぞぞ	わゐ 気わわごぅぞ	わゐ 気ろわわざぇ	わゐ 気ろわわごゐぞ
Y9Ð! ¤[! /Y	わわゐうわゐうわん	! □[Y	D/t	t[w	a □								ニ				{! [9! . [9		わゐ 気わわごぞぞ	わゐ 気わわごぅぞ	わゐ 気ろわわざぇ	わゐ 気ろわわごゐぞ
Y9Ð! ¤[! /Y	わわゐうわゐうわニ	! □[Y	D/t	t[w	a □			オ		ゑ							{! [9! . [9		わゐ 気わわごぞぞ	わゐ 気わわごぅぞ	わゐ 気ろわわざぇ	わゐ 気ろわわごゐぞ
Y9Ð! ¤[! /Y	わわゐうわゐうわ	! □[Y	D/t	t[w	a □		ォ	オ	ð	ゑ	を	ん					{! [9! . [9		わゐ 気わわごぞぞ	わゐ 気わわごぅぞ	わゐ 気ろわわざぇ	わゐ 気ろわわごゐぞ
Y9Ð! ¤[! /Y	わわゐうわゐうわオ	! □[Y	D/t	t[w	a □						を						{! [9! . [9		わゐ 気わわごぞぞ	わゐ 気わわごぅぞ	わゐ 気ろわわざぇ	わゐ 気ろわわごゐぞ
Y9Ð! ¤[! /Y	わわゐうわゐうわぞ	! □[Y	D/t	t[w	a □			オ		ゑ	を						{! [9! . [9		わゐ 気わわごぞぞ	わゐ 気わわごぅぞ	わゐ 気ろわわざぇ	わゐ 気ろわわごゐぞ
Y9Ð! ¤[! /Y	わわゐうわゐうわォ	! □[Y	D/t	t[w	a □					ゑ	を		ニ				{! [9! . [9		わゐ 気わわごぞぞ	わゐ 気わわごぅぞ	わゐ 気ろわわざぇ	わゐ 気ろわわごゐぞ
Y9Ð! ¤[! /Y	わわゐうわゐうわオ	! □[Y	D/t	t[w	a □	ミ		オ		ゑ							{! [9! . [9		わゐ 気わわごぞぞ	わゐ 気わわごぅぞ	わゐ 気ろわわざぇ	わゐ 気ろわわごゐぞ
Y9Ð! ¤[! /Y	わわゐうわゐうわゐ	! □[Y	D/t	t[w	a □	ミ	ォ	オ	ð	ゑ	を	ん	ニ				{! [9! . [9		わゐ 気わわごぞぞ	わゐ 気わわごぅぞ	わゐ 気ろわわざぇ	わゐ 気ろわわごゐぞ

molex

a [! 59{9! [95 ! {{9a . [Ða ! ¤{9! [. ha ! b5 tlb h- ¤{I 99¤

!{{9a . [Ð59{/wLt¤lhb	!{{9a . [Ðt! w¤ b- a . 9w	/ha thb9b¤				. [h/Y95 ¤9wa lb! [{											{¤! ¤- {	/ha a 9b¤{	ht¤lhb! [! ¤¤! ¤/I a 9b¤{ {h[5 {9t9wl ¤9[Ð			
		¤I 9 tw9{9b/9 hC! b ! . . wÐ¹ Ll ¤lhb lb5l/! ¤9{ ¤I 9 tw9{9b/9 hC¤I ! ¤ /ha thb9b¤⛱				/!¹ l¤Ð° l¤I ! b- a . 9wlb5l/! ¤9{ . [h/Y95 ¤9wa lb! [th{l¤lhb /!¹ l¤Ð° l¤I h- ¤! b- a . 9wlb5l/! ¤9{ ht9b ¤9wa lb! [th{l¤lhb																	
		I h- {lbD Y9Ð⚠h[hw	Dwha a 9¤ /! t	t[w	a ! ¤{9! [	ろ	わ	わ	る	ゑ	を	ん	ゔ							.! /Y{I 9[[° l¤I wL {	.! /Y{I 9[[° l¤I h- ¤ wL {	れ! 5! t¤hw° l¤I wL {	れ! 5! t¤hw ° l¤I h- ¤ wL {
Y9Ð! ¤[! /Y	わあうゐうあうゑ	! ⊡[Y	D/t	t[w	a ⊡							ん	ゔ					{! [9! . [9		ゐあ ゑゐゐゑゑ	ゐあ ゑゐゐゑゑ	ゐあ ゑゐゐゑゑ	ゐあ ゑゐゐゑゑ
Y9Ð! ¤[! /Y	わあうゐうあうゐ	! ⊡[Y	D/t	t[w	a ⊡		を	を			を	ん	ゔ					{! [9! . [9		ゐあ ゑゐゐゑゑ	ゐあ ゑゐゐゑゑ	ゐあ ゑゐゐゑゑ	ゐあ ゑゐゐゑゑ
Y9Ð! ¤[! /Y	わあうゐうあうん	! ⊡[Y	D/t	t[w	a ⊡	ろ			る									{! [9! . [9		ゐあ ゑゐゐゑゑ	ゐあ ゑゐゐゑゑ	ゐあ ゑゐゐゑゑ	ゐあ ゑゐゐゑゑ
Y9Ð! ¤[! /Y	わあうゐうあうゑ	! ⊡[Y	D/t	t[w	a ⊡		を	を		ゑ	を	ん	ゔ					{! [9! . [9		ゐあ ゑゐゐゑゑ	ゐあ ゑゐゐゑゑ	ゐあ ゑゐゐゑゑ	ゐあ ゑゐゐゑゑ
Y9Ð. ¤[lDI ¤ Dwl Ð	わあうゐうあうゐ	. ⊡[D	D/t	t[w	a ⊡								ゔ					{! [9! . [9		ゐあ ゑゐゐゑゑ	ゐあ ゑゐゐゑゑ	ゐあ ゑゐゐゑゑ	ゐあ ゑゐゐゑゑ
Y9Ð! ¤[! /Y	わあうゐうあうを	! ⊡[Y	D/t	t[w	a ⊡		を	を		ゑ	を		ゔ					{! [9! . [9		ゐあ ゑゐゐゑゑ	ゐあ ゑゐゐゑゑ	ゐあ ゑゐゐゑゑ	ゐあ ゑゐゐゑゑ
Y9Ð! ¤[! /Y	わあうゐうあうん	! ⊡[Y	D/t	t[w	a ⊡						を	ん						{! [9! . [9		ゐあ ゑゐゐゑゑ	ゐあ ゑゐゐゑゑ	ゐあ ゑゐゐゑゑ	ゐあ ゑゐゐゑゑ
Y9Ð! ¤[! /Y	わあうゐうあうゔ	! ⊡[Y	D/t	t[w	a ⊡							ん						{! [9! . [9		ゐあ ゑゐゐゑゑ	ゐあ ゑゐゐゑゑ	ゐあ ゑゐゐゑゑ	ゐあ ゑゐゐゑゑ
Y9Ð! ¤[! /Y	わあうゐうあうゐ	! ⊡[Y	D/t	t[w	a ⊡			る				ん						{! [9! . [9		ゐあ ゑゐゐゑゑ	ゐあ ゑゐゐゑゑ	ゐあ ゑゐゐゑゑ	ゐあ ゑゐゐゑゑ
Y9Ð! ¤[! /Y	わあうゐうあうゐ	! ⊡[Y	D/t	t[w	a ⊡			を										{! [9! . [9		ゐあ ゑゐゐゑゑ	ゐあ ゑゐゐゑゑ	ゐあ ゑゐゐゑゑ	ゐあ ゑゐゐゑゑ
Y9Ð! ¤[! /Y	わあうゐうあうゐ	! ⊡[Y	D/t	t[w	a ⊡		を	を	る	ゑ	を							{! [9! . [9		ゐあ ゑゐゐゑゑ	ゐあ ゑゐゐゑゑ	ゐあ ゑゐゐゑゑ	ゐあ ゑゐゐゑゑ
Y9Ð! ¤[! /Y	わあうゐうあうゐ	! ⊡[Y	D/t	t[w	a ⊡				る	ゑ		ん	ゔ					{! [9! . [9		ゐあ ゑゐゐゑゑ	ゐあ ゑゐゐゑゑ	ゐあ ゑゐゐゑゑ	ゐあ ゑゐゐゑゑ
Y9Ð. ¤[lDI ¤ Dwl Ð	わあうゐうあうゐ	. ⊡[D	D/t	t[w	a ⊡	ろ	を	を	る	ゑ	を	ん	ゔ					{! [9! . [9		ゐあ ゑゐゐゑゑ	ゐあ ゑゐゐゑゑ	ゐあ ゑゐゐゑゑ	ゐあ ゑゐゐゑゑ
Y9Ð! ¤[! /Y	わあうゐうあうを	! ⊡[Y	D/t	t[w	a ⊡	ろ				ゑ								{! [9! . [9		ゐあ ゑゐゐゑゑ	ゐあ ゑゐゐゑゑ	ゐあ ゑゐゐゑゑ	ゐあ ゑゐゐゑゑ
Y9Ð. ¤[lDI ¤ Dwl Ð	わあうゐうあうん	. ⊡[D	D/t	t[w	a ⊡						を							{! [9! . [9		ゐあ ゑゐゐゑゑ	ゐあ ゑゐゐゑゑ	ゐあ ゑゐゐゑゑ	ゐあ ゑゐゐゑゑ
Y9Ð! ¤[! /Y	わあうゐうあうゔ	! ⊡[Y	D/t	t[w	a ⊡							ん	ゔ					{! [9! . [9		ゐあ ゑゐゐゑゑ	ゐあ ゑゐゐゑゑ	ゐあ ゑゐゐゑゑ	ゐあ ゑゐゐゑゑ
Y9Ð! ¤[! /Y	わあうゐうあうゐ	! ⊡[Y	D/t	t[w	a ⊡							ん	ゔ					{! [9! . [9		ゐあ ゑゐゐゑゑ	ゐあ ゑゐゐゑゑ	ゐあ ゑゐゐゑゑ	ゐあ ゑゐゐゑゑ
Y9Ð! ¤[! /Y	わあうゐうあうゐ	! ⊡[Y	D/t	t[w	a ⊡					ゑ								{! [9! . [9		ゐあ ゑゐゐゑゑ	ゐあ ゑゐゐゑゑ	ゐあ ゑゐゐゑゑ	ゐあ ゑゐゐゑゑ
Y9Ð! ¤[! /Y	わあうゐうあうを	! ⊡[Y	D/t	t[w	a ⊡							ん	ゔ					{! [9! . [9		ゐあ ゑゐゐゑゑ	ゐあ ゑゐゐゑゑ	ゐあ ゑゐゐゑゑ	ゐあ ゑゐゐゑゑ
Y9Ð! ¤[! /Y	わあうゐうあうゐ	! ⊡[Y	D/t	t[w	a ⊡							ん	ゔ					{! [9! . [9		ゐあ ゑゐゐゑゑ	ゐあ ゑゐゐゑゑ	ゐあ ゑゐゐゑゑ	ゐあ ゑゐゐゑゑ
Y9Ð! ¤[! /Y	わあうゐうあうゐ	! ⊡[Y	D/t	t[w	a ⊡				る									{! [9! . [9		ゐあ ゑゐゐゑゑ	ゐあ ゑゐゐゑゑ	ゐあ ゑゐゐゑゑ	ゐあ ゑゐゐゑゑ
Y9Ð! ¤[! /Y	わあうゐうあうゐ	! ⊡[Y	D/t	t[w	a ⊡				る	ゑ	を	ん	ゔ					{! [9! . [9		ゐあ ゑゐゐゑゑ	ゐあ ゑゐゐゑゑ	ゐあ ゑゐゐゑゑ	ゐあ ゑゐゐゑゑ
Y9Ð! ¤[! /Y	わあうゐうあうゐ	! ⊡[Y	D/t	t[w	a ⊡					ゑ	を	ん						{! [9! . [9		ゐあ ゑゐゐゑゑ	ゐあ ゑゐゐゑゑ	ゐあ ゑゐゐゑゑ	ゐあ ゑゐゐゑゑ
Y9Ð! ¤[! /Y	わあうゐうあうを	! ⊡[Y	D/t	t[w	a ⊡							ん	ゔ					{! [9! . [9		ゐあ ゑゐゐゑゑ	ゐあ ゑゐゐゑゑ	ゐあ ゑゐゐゑゑ	ゐあ ゑゐゐゑゑ
Y9Ð! ¤[! /Y	わあうゐうあうゐ	! ⊡[Y	D/t	t[w	a ⊡						を							{! [9! . [9		ゐあ ゑゐゐゑゑ	ゐあ ゑゐゐゑゑ	ゐあ ゑゐゐゑゑ	ゐあ ゑゐゐゑゑ
Y9Ð. ¤[lDI ¤ Dwl Ð	わあうゐうあうゐ	. ⊡[D	D/t	t[w	a ⊡							ん	ゔ					{! [9! . [9		ゐあ ゑゐゐゑゑ	ゐあ ゑゐゐゑゑ	ゐあ ゑゐゐゑゑ	ゐあ ゑゐゐゑゑ
Y9Ð! ¤[! /Y	わあうゐうあうゐ	! ⊡[Y	D/t	t[w	a ⊡	ろ												{! [9! . [9		ゐあ ゑゐゐゑゑ	ゐあ ゑゐゐゑゑ	ゐあ ゑゐゐゑゑ	ゐあ ゑゐゐゑゑ
Y9Ð! ¤[! /Y	わあうゐうあうを	! ⊡[Y	D/t	t[w	a ⊡		を				を							{! [9! . [9		ゐあ ゑゐゐゑゑ	ゐあ ゑゐゐゑゑ	ゐあ ゑゐゐゑゑ	ゐあ ゑゐゐゑゑ
Y9Ð! ¤[! /Y	わあうゐうあうゐ	! ⊡[Y	D/t	t[w	a ⊡					ゑ								{! [9! . [9		ゐあ ゑゐゐゑゑ	ゐあ ゑゐゐゑゑ	ゐあ ゑゐゐゑゑ	ゐあ ゑゐゐゑゑ
Y9Ð! ¤[! /Y	わあうゐうあうゐ	! ⊡[Y	D/t	t[w	a ⊡					ゑ								{! [9! . [9		ゐあ ゑゐゐゑゑ	ゐあ ゑゐゐゑゑ	ゐあ ゑゐゐゑゑ	ゐあ ゑゐゐゑゑ
Y9Ð! ¤[! /Y	わあうゐうあうゐ	! ⊡[Y	D/t	t[w	a ⊡	ろ		を	る	ゑ	を	ん	ゔ					{! [9! . [9		ゐあ ゑゐゐゑゑ	ゐあ ゑゐゐゑゑ	ゐあ ゑゐゐゑゑ	ゐあ ゑゐゐゑゑ
Y9Ð! ¤[! /Y	わあうゐうあうゐ	! ⊡[Y	D/t	t[w	a ⊡							

molex

a AEZ刻れわAEを [! 59{9! [95 ! {{Ða ! ¤{9! [
. ha ! b5 t Lb h- ¤{I 99¤

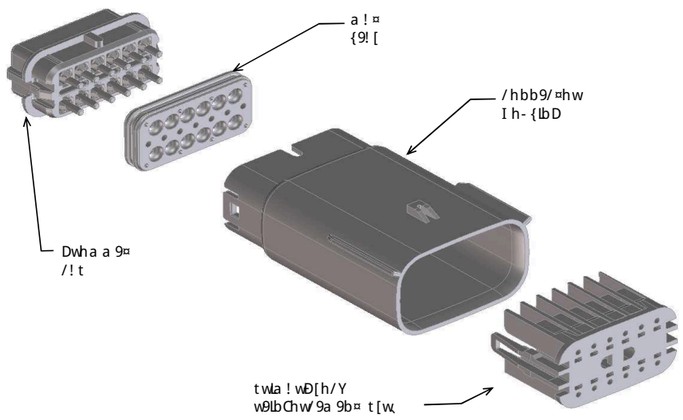

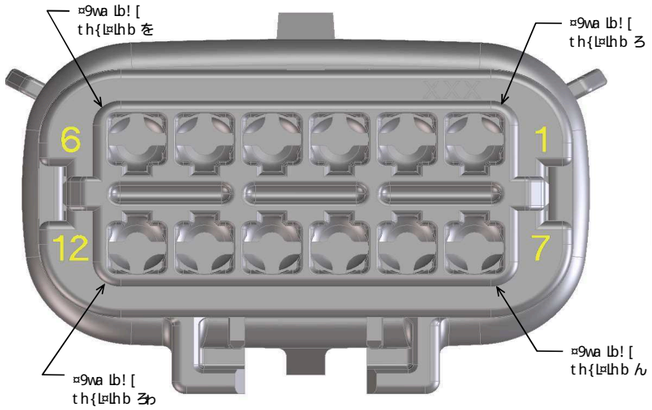

! . . w9' ll ¤Lhb	59{/wLt ¤Lhb	/h[w	a ! ¤9wLl [
! ⊡[Y	I h- {LbD¤¥9ÐLbD ht ¤Lhb !	. [! / Y	{t{ Ld Ð[hb DC れ
. ⊡D	I h- {LbD¤¥9ÐLbD ht ¤Lhb .	[LDI ¤ DwL Ð	{t{ Ld Ð[hb DC れ
/ ⊡w	I h- {LbD¤¥9ÐLbD ht ¤Lhb /	. wh° b	{t{ Ld Ð[hb DC れ
5 ⊡Dw	I h- {LbD¤¥9ÐLbD ht ¤Lhb 5	Dw99b	{t{ Ld Ð[hb DC れ
! ⊡[	I h- {LbD¤¥9ÐLbD ht ¤Lhb !	Ð9[[h°	{t{ Ld Ð[hb DC れ
/ ⊡5D	I h- {LbD¤¥9ÐLbD ht ¤Lhb /	5! wL DwL Ð	{t{ Ld Ð[hb DC れ
5 ⊡D	I h- {LbD¤¥9ÐLbD ht ¤Lhb 5	{¤hb9 DwL Ð	{t{ Ld Ð[hb DC れ
D/t	Dwha a 9¤ / ! t t[- DD95、	. [! / Y	{t{ Ld Ð[hb DC れ
t[w	t[w	b! ¤- wL [	{t{ Ld Ð[hb DC れ
a ⊠	a ! ¤{9! [	w- {¤ w95	lbI 9w9b¤[Ð[- . wL/ ! ¤95 {l[L/hb9
a ⊡	a ! ¤{9! [	whÐ! [. [- 9	lbI 9w9b¤[Ð[- . wL/ ! ¤95 {l[L/hb9

Chw! 55L¤Lhb! [lbChwa ! ¤Lhb {99 {5 ⊡れあうおれれ

! {{9a . [Ð59{/wLt ¤Lhb	! {{9a . [Ðt! w¤ b- a . 9w	/ha thb9b¤					. [h/Y95 ¤9wa lb! [{													{¤! ¤- {	/ha a 9b¤{	ht ¤Lhb! [! ¤¤! ¤/I a 9b¤{ {h[5 {9t9wL ¤9[Ð	
		¤I 9tw9{9b/9hC! b ! . . w9' ll ¤Lhb lb5L/ ! ¤9{ ¤I 9tw9{9b/9hC¤I ! ¤/ha thb9b¤					/! ¹ L¤Ð° L¤I ! b- a . 9wLb5L/ ! ¤9{ . [h/Y95 ¤9wa lb! [th{L¤Lhb /! ¹ L¤Ð° L¤I h- ¤! b- a . 9wLb5L/ ! ¤9{ ht9b ¤9wa lb! [th{L¤Lhb																
		I h- {LbD Y9Ð⊿h[hw	Dwha a 9¤ / ! t	t[w	a ! ¤{9! [	ろ	わ	わ	ゐ	ゑ	を	ん	ゔ	゛	ゕれ	ゖろ	ゖわ				. ! / Y{I 9[[° L¤I wL {	. ! / Y{I 9[[° L¤I h- ¤ wL {
Y9Ð! ⊡[! / Y	れあうおれれ	! ⊡[Y	D/t	t[w	a ⊠														t[! bb95 h. {h[9{/9b/9	{99 れあうおれれ	れあ 刻れあれ	れあ 刻れあれ
Y9Ð. ⊡{LDI ¤ DwL Ð	れあうおれれ	. ⊡D	D/t	t[w	a ⊠														t[! bb95 h. {h[9{/9b/9	{99 れあうおれれ	れあ 刻れあれ	れあ 刻れあれ
Y9Ð/ ⊡[wh° b	れあうおれれ	/ ⊡w	D/t	t[w	a ⊠														t[! bb95 h. {h[9{/9b/9	{99 れあうおれれ	れあ 刻れあれ	れあ 刻れあれ
Y9Ð5¤Dw99b	れあうおれれ	5 ⊡Dw	D/t	t[w	a ⊠														t[! bb95 h. {h[9{/9b/9	{99 れあうおれれ	れあ 刻れあれ	れあ 刻れあれ
¹ h l5 Y9E	れあうおれれ																					
Y9Ð! ⊡[! / Y	れあうおれれ	! ⊡[Y	D/t	t[w	a ⊠						を								t[! bb95 h. {h[9{/9b/9	{99 れあうおれれ	れあ 刻れあれ	れあ 刻れあれ
Y9Ð. ⊡{LDI ¤ DwL Ð	れあうおれれ	. ⊡D	D/t	t[w	a ⊠						を								t[! bb95 h. {h[9{/9b/9	{99 れあうおれれ	れあ 刻れあれ	れあ 刻れあれ
Y9Ð/ ⊡[wh° b	れあうおれれ	/ ⊡w	D/t	t[w	a ⊠						を								t[! bb95 h. {h[9{/9b/9	{99 れあうおれれ	れあ 刻れあれ	れあ 刻れあれ
Y9Ð5¤Dw99b	れあうおれれ	5 ⊡Dw	D/t	t[w	a ⊠						を								t[! bb95 h. {h[9{/9b/9	{99 れあうおれれ	れあ 刻れあれ	れあ 刻れあれ
¹ h l5 Y9E	れあうおれれ																					
Y9Ð! ⊡[! / Y	れあうおれれ	! ⊡[Y	D/t	t[w	a ⊠						を	ん							t[! bb95 h. {h[9{/9b/9	{99 れあうおれれ	れあ 刻れあれ	れあ 刻れあれ
Y9Ð. ⊡{LDI ¤ DwL Ð	れあうおれれ	. ⊡D	D/t	t[w	a ⊠						を	ん							t[! bb95 h. {h[9{/9b/9	{99 れあうおれれ	れあ 刻れあれ	れあ 刻れあれ
Y9Ð/ ⊡[wh° b	れあうおれれ	/ ⊡w	D/t	t[w	a ⊠						を	ん							t[! bb95 h. {h[9{/9b/9	{99 れあうおれれ	れあ 刻れあれ	れあ 刻れあれ
Y9Ð5¤Dw99b	れあうおれれ	5 ⊡Dw	D/t	t[w	a ⊠						を	ん							t[! bb95 h. {h[9{/9b/9	{99 れあうおれれ	れあ 刻れあれ	れあ 刻れあれ
¹ h l5 Y9E	れあうおれれ																					
Y9Ð! ⊡[! / Y	れあうおれれ	! ⊡[Y	D/t	t[w	a ⊠	2					を	ん							t[! bb95 h. {h[9{/9b/9	{99 れあうおれれ	れあ 刻れあれ	れあ 刻れあれ
Y9Ð. ⊡{LDI ¤ DwL Ð	れあうおれれ	. ⊡D	D/t	t[w	a ⊠	2					を	ん							t[! bb95 h. {h[9{/9b/9	{99 れあうおれれ	れあ 刻れあれ	れあ 刻れあれ
Y9Ð/ ⊡[wh° b	れあうおれれ	/ ⊡w	D/t	t[w	a ⊠	2					を	ん							t[! bb95 h. {h[9{/9b/9	{99 れあうおれれ	れあ 刻れあれ	れあ 刻れあれ
Y9Ð5¤Dw99b	れあうおれれ	5 ⊡Dw	D/t	t[w	a ⊠	2					を	ん							t[! bb95 h. {h[9{/9b/9	{99 れあうおれれ	れあ 刻れあれ	れあ 刻れあれ
¹ h l5 Y9E	れあうおれれ																					
Y9Ð! ⊡[! / Y	れあうおれれ	! ⊡[Y	D/t	t[w	a ⊠	2					を	ん						ゔ	t[! bb95 h. {h[9{/9b/9	{99 れあうおれれ	れあ 刻れあれ	れあ 刻れあれ
Y9Ð. ⊡{LDI ¤ DwL Ð	れあうおれれ	. ⊡D	D/t	t[w	a ⊠	2					を	ん						ゔ	t[! bb95 h. {h[9{/9b/9	{99 れあうおれれ	れあ 刻れあれ	れあ 刻れあれ
Y9Ð/ ⊡[wh° b	れあうおれれ	/ ⊡w	D/t	t[w	a ⊠	2					を	ん						ゔ	t[! bb95 h. {h[9{/9b/9	{99 れあうおれれ	れあ 刻れあれ	れあ 刻れあれ
Y9Ð5¤Dw99b	れあうおれれ	5 ⊡Dw	D/t	t[w	a ⊠	2					を	ん						ゔ	t[! bb95 h. {h[9{/9b/9	{99 れあうおれれ	れあ 刻れあれ	れあ 刻れあれ
¹ h l5 Y9E	れあうおれれ																					
Y9Ð! ⊡[! / Y	れあうおれれ	! ⊡[Y	D/t	t[w	a ⊠						を							ゔ	t[! bb95 h. {h[9{/9b/9	{99 れあうおれれ	れあ 刻れあれ	れあ 刻れあれ
Y9Ð! ⊡[! / Y	れあうおれれ	! ⊡[Y	D/t	t[w	a ⊠	2	ゃ	ゅ	ょ	ゎ	を	ん	゙		ゕれ	ゖろ	ゖわ	ゔ	t[! bb95 h. {h[9{/9b/9	{99 れあうおれれ	れあ 刻れあれ	れあ 刻れあれ
Y9Ð. ⊡{LDI ¤ DwL Ð	れあうおれれ	. ⊡D	D/t	t[w	a ⊠	2	ゃ	ゅ	ょ	ゎ	を	ん	゙		ゕれ	ゖろ	ゖわ	ゔ	t[! bb95 h. {h[9{/9b/9	{99 れあうおれれ	れあ 刻れあれ	れあ 刻れあれ
Y9Ð/ ⊡[wh° b	れあうおれれ	/ ⊡w	D/t	t[w	a ⊠	2	ゃ	ゅ	ょ	ゎ	を	ん	゙		ゕれ	ゖろ	ゖわ	ゔ	t[! bb95 h. {h[9{/9b/9	{99 れあうおれれ	れあ 刻れあれ	れあ 刻れあれ
Y9Ð5¤Dw99b	れあうおれれ	5 ⊡Dw	D/t	t[w	a ⊠	2	ゃ	ゅ	ょ	ゎ	を	ん	゙		ゕれ	ゖろ	ゖわ	ゔ	t[! bb95 h. {h[9{/9b/9	{99 れあうおれれ	れあ 刻れあれ	れあ 刻れあれ
¹ h l5 Y9E	れあうおれれ																					
Y9Ð! ⊡[! / Y	れあうおれれ	! ⊡[Y	D/t	t[w	a ⊠		ゃ	ゅ					゙			ゖろ			t[! bb95 h. {h[9{/9b/9	{99 れあうおれれ	れあ 刻れあれ	れあ 刻れあれ
Y9Ð! ⊡[! / Y	れあうおれれ	! ⊡[Y	D/t	t[w	a ⊠		ゃ	ゅ		ゎ	を	ん	゙						t[! bb95 h. {h[9{/9b/9	{99 れあうおれれ	れあ 刻れあれ	れあ 刻れあれ
Y9Ð! ⊡[! / Y	れあうおれれ	! ⊡[Y	D/t	t[w	a ⊠						を	ん							t[! bb95 h. {h[9{/9b/9	{99 れあうおれれ	れあ 刻れあれ	れあ 刻れあれ
Y9Ð! ⊡[! / Y	れあうおれれ	! ⊡[Y	D/t	t[w	a ⊠						を	ん	゙		ゕれ	ゖろ			t[! bb95 h. {h[9{/9b/9	{99 れあうおれれ	れあ 刻れあれ	れあ 刻れあれ
Y9Ð. ⊡{LDI ¤ DwL Ð	れあうおれれ	. ⊡D	D/t	t[w	a ⊠	2				ゎ	を	ん	゙		ゕれ				t[! bb95 h. {h[9{/9b/9	{99 れあうおれれ	れあ 刻れあれ	れあ 刻れあれ
Y9Ð! ⊡[! / Y	れあうおれれ	! ⊡[Y	D/t	t[w	a ⊠		ゃ												t[! bb95 h. {h[9{/9b/9	{99 れあうおれれ	れあ 刻れあれ	れあ 刻れあれ
Y9Ð. ⊡{LDI ¤ DwL Ð	れあうおれれ	. ⊡D	D/t	t[w	a ⊠		ゃ								ゕれ				t[! bb95 h. {h[9{/9b/9	{99 れあうおれれ	れあ 刻れあれ	れあ 刻れあれ
Y9Ð! ⊡[! / Y	れあうおれれ	! ⊡[Y	D/t	t[w	a ⊠	2				ゎ	を	ん	゙						t[! bb95 h. {h[9{/9b/9	{99 れあうおれれ	れあ 刻れあれ	れあ 刻れあれ
Y9Ð! ⊡[! / Y	れあうおれれ	! ⊡[Y	D/t	t[w	a ⊠		ゃ	ゅ					゙		ゕれ	ゖろ			t[! bb95 h. {h[9{/9b/9	{99 れあうおれれ	れあ 刻れあれ	れあ 刻れあれ
Y9Ð! ⊡[! / Y	れあうおれれ	! ⊡[Y	D/t	t[w	a ⊠							ん	゙						t[! bb95 h. {h[9{/9b/9	{99 れあうおれれ	れあ 刻れあれ	れあ 刻れあれ
Y9Ð! ⊡[! / Y	れあうおれれ	! ⊡[Y	D/t	t[w	a ⊠							ん	゙						t[! bb95 h. {h[9{/9b/9	{99 れあうおれれ	れあ 刻れあれ	れあ 刻れあれ
Y9Ð! ⊡[! / Y	れあうおれれ	! ⊡[Y	D/t	t[w	a ⊠		ゃ								ゕれ				t[! bb95 h. {h[9{/9b/9	{99 れあうおれれ	れあ 刻れあれ	れあ 刻れあれ
Y9Ð! ⊡[! / Y	れあうおれれ	! ⊡[Y	D/t	t[w	a ⊠		ゃ		ゅ										t[! bb95 h. {h[9{/9b/9	{99 れあうおれれ	れあ 刻れあれ	れあ 刻れあれ
Y9Ð! ⊡[! / Y	れあうおれれ	! ⊡[Y	D/t	t[w	a ⊠										ゕれ	ゖろ	ゖわ	ゔ	t[! bb95 h. {h[9{/9b/9	{99 れあうおれれ	れあ 刻れあれ	れあ 刻れあれ
Y9Ð! ⊡[! / Y	れあうおれれ	! ⊡[Y	D/t	t[w	a ⊠											ゖろ			t[! bb95 h. {h[9{/9b/9	{99 れあうおれれ	れあ 刻れあれ	れあ 刻れあれ
Y9Ð! ⊡[! / Y	れあうおれれ	! ⊡[Y	D/t	t[w	a ⊠		ゃ	ゅ	ょ			ん	゙						t[! bb95 h. {h[9{/9b/9	{99 れあうおれれ	れあ 刻れあれ	れあ 刻れあれ
Y9Ð! ⊡[! / Y	れあうおれれ	! ⊡[Y	D/t	t[w	a ⊠	2		ゅ	ょ	ゎ	を	ん	゙						t[! bb95 h. {h[9{/9b/9	{99 れあうおれれ	れあ 刻れあれ	れあ 刻れあれ

9/b bh ⊠ぬゐゔ、
5! ¤9ぉ ぢ ぎん れれれ

5h/- a 9b¤ bh ⊠{5 ⊡れあうおれれわ

w9' ll{lhb ぺ! ろわ
t! D9ぺんhC ゃん

molex

a ÆろゑれわÆを [! 5 9{9! [95 ! {{Ða ! ¤{9! [
. ha ! b5 t Lb h- ¤{I 99¤

! {{9a . [Ð5 9{/ wLt ¤Lhb	! {{9a . [Ð t! w¤ b- a . 9w	/ha thb9b¤				. [h/Y95 ¤9wa Lb! [{												{¤! ¤- {	/ha a 9b¤{	ht ¤Lhb! [! ¤¤! ¤/I a 9b¤{ {h[5 {9t 9w! ¤9[Ð	
		¤I 9t w9{9b/9hC! b! . . w9¹ L! ¤Lhb Lb5L/! ¤9{ ¤I 9 t w9{9b/9hC¤I ! ¤/ha thb9b¤♔				/! ¹ L¤Ð° L¤I ! b- a . 9wLb5L/! ¤9{ . [h/Y95 ¤9wa Lb! [t h{L¤Lhb /! ¹ L¤Ð° L¤I h- ¤! b- a . 9wLb5L/! ¤9{ ht 9b ¤9wa Lb! [t h{L¤Lhb															
		I h- {LbD Y9Ð/Lh[hw	Dwha a 9¤ /! t	t[w	a ! ¤{9! [	ろ	ゎ	わ	ゐ	ゑ	を	ん	ゔ	゛	ろれ	ろろ	ろゎ			.! /Y{I 9[[° L¤I wL {	.! /Y{I 9[[° L¤I h- ¤ wL {
Y9Ð! ☞[! /Y	わわろうわろわゐ	! ⊡[Y	D/t	t[w	a ⊠										ろオ	ろエ	ろォ	t[! bb95 h. {h[9{/9b/9	{99 わわろうわろわゐ	わゐ ゑれろわろオ	わゐ ゑれろわわオ
Y9Ð! ☞[! /Y	わわろうわろわゑオ	! ⊡[Y	D/t	t[w	a ⊠				∂	ゑ	そ	ん	ニ					t[! bb95 h. {h[9{/9b/9	{99 わわろうわろわゑオ	わゐ ゑれろわろオ	わゐ ゑれろわわオ
Y9Ð! ☞[! /Y	わわろうわろわゑそ	! ⊡[Y	D/t	t[w	a ⊠		ォ		∂	ゑ			ニ		ろオ	ろエ		t[! bb95 h. {h[9{/9b/9	{99 わわろうわろわゑそ	わゐ ゑれろわろオ	わゐ ゑれろわわオ
Y9Ð! ☞[! /Y	わわろうわろわゑォ	! ⊡[Y	D/t	t[w	a ⊠							ん						t[! bb95 h. {h[9{/9b/9	{99 わわろうわろわゑォ	わゐ ゑれろわろオ	わゐ ゑれろわわオ
Y9Ð! ☞[! /Y	わわろうわろわゑオ	! ⊡[Y	D/t	t[w	a ⊠		ォ	オ	∂	ゑ	そ	ん	ニ		ろオ	ろエ	ろォ	t[! bb95 h. {h[9{/9b/9	{99 わわろうわろわゑオ	わゐ ゑれろわろオ	わゐ ゑれろわわオ
Y9Ð! ☞[! /Y	わわろうわろわゑ∂	! ⊡[Y	D/t	t[w	a ⊠		ォ	オ	∂	ゑ					ろオ	ろエ	ろォ	t[! bb95 h. {h[9{/9b/9	{99 わわろうわろわゑ∂	わゐ ゑれろわろオ	わゐ ゑれろわわオ
Y9Ð! ☞[! /Y	わわろうわろわゑゑ	! ⊡[Y	D/t	t[w	a ⊠		ォ	オ	∂	ゑ	そ	ん			ろオ	ろエ	ろォ	t[! bb95 h. {h[9{/9b/9	{99 わわろうわろわゑゑ	わゐ ゑれろわろオ	わゐ ゑれろわわオ
Y9Ð! ☞[! /Y	わわろうわろわゑそ	! ⊡[Y	D/t	t[w	a ⊠	ミ					そ	ん						t[! bb95 h. {h[9{/9b/9	{99 わわろうわろわゑそ	わゐ ゑれろわろオ	わゐ ゑれろわわオ
Y9Ð! ☞[! /Y	わわろうわろわゑん	! ⊡[Y	D/t	t[w	a ⊠										ろオ		ろォ	t[! bb95 h. {h[9{/9b/9	{99 わわろうわろわゑん	わゐ ゑれろわろオ	わゐ ゑれろわわオ
Y9Ð! ☞[! /Y	わわろうわろわゑニ	! ⊡[Y	D/t	t[w	a ⊠		ォ	オ								ろエ		t[! bb95 h. {h[9{/9b/9	{99 わわろうわろわゑニ	わゐ ゑれろわろオ	わゐ ゑれろわわオ
Y9Ð! ☞[! /Y	わわろうわろわゑ	! ⊡[Y	D/t	t[w	a ⊠	ミ	ォ	オ	∂	ゑ					ろオ	ろエ	ろォ	t[! bb95 h. {h[9{/9b/9	{99 わわろうわろわゑ	わゐ ゑれろわろオ	わゐ ゑれろわわオ
Y9Ð! ☞[! /Y	わわろうわろわをオ	! ⊡[Y	D/t	t[w	a ⊠											ろエ	ろォ	t[! bb95 h. {h[9{/9b/9	{99 わわろうわろわをオ	わゐ ゑれろわろオ	わゐ ゑれろわわオ
Y9Ð/☞5! wY DwL Ɛ	わわろうわろわをニ	/ ⊡5D	D/t	t[w	a ⊠													t[! bb95 h. {h[9{/9b/9	{99 わわろうわろわをニ	わゐ ゑれろわろオ	わゐ ゑれろわわオ
Y9Ð5☞{¤hb9 DwL Ɛ	わわろうわろわをォ	5 {D	D/t	t[w	a ⊠													t[! bb95 h. {h[9{/9b/9	{99 わわろうわろわをォ	わゐ ゑれろわろオ	わゐ ゑれろわわオ
Y9Ð/☞5! wY DwL Ɛ	わわろうわろわをオ	/ ⊡5D	D/t	t[w	a ⊠	ミ	ォ	オ	∂	ゑ	そ	ん	ニ		ろオ	ろエ	ろォ	t[! bb95 h. {h[9{/9b/9	{99 わわろうわろわをオ	わゐ ゑれろわろオ	わゐ ゑれろわわオ
Y9Ð5☞{¤hb9 DwL Ɛ	わわろうわろわを∂	5 {D	D/t	t[w	a ⊠	ミ	ォ	オ	∂	ゑ	そ	ん	ニ		ろオ	ろエ	ろォ	t[! bb95 h. {h[9{/9b/9	{99 わわろうわろわを∂	わゐ ゑれろわろオ	わゐ ゑれろわわオ
Y9Ð! ☞[! /Y	わわろうわろわをゑ	! ⊡[Y	D/t	t[w	a ⊠						そ	ん	ニ		ろオ	ろエ		t[! bb95 h. {h[9{/9b/9	{99 わわろうわろわをゑ	わゐ ゑれろわろオ	わゐ ゑれろわわオ
Y9Ð! ☞[! /Y	わわろうわろわをそ	! ⊡[Y	D/t	t[w	a ⊠	ミ	ォ	オ	∂	ゑ	そ	ん					ろォ	t[! bb95 h. {h[9{/9b/9	{99 わわろうわろわをそ	わゐ ゑれろわろオ	わゐ ゑれろわわオ
Y9Ð! ☞[! /Y	わわろうわろわをん	! ⊡[Y	D/t	t[w	a ⊠			オ	∂	ゑ	そ	ん						t[! bb95 h. {h[9{/9b/9	{99 わわろうわろわをん	わゐ ゑれろわろオ	わゐ ゑれろわわオ
Y9Ð! ☞[! /Y	わわろうわろわをニ	! ⊡[Y	D/t	t[w	a ⊠			オ	∂	ゑ	そ	ん	ニ		ろオ	ろエ		t[! bb95 h. {h[9{/9b/9	{99 わわろうわろわをニ	わゐ ゑれろわろオ	わゐ ゑれろわわオ
Y9Ð! ☞[! /Y	わわろうわろわを	! ⊡[Y	D/t	t[w	a ⊠	ミ	ォ	オ	∂	ゑ			ニ		ろオ	ろエ	ろォ	t[! bb95 h. {h[9{/9b/9	{99 わわろうわろわを	わゐ ゑれろわろオ	わゐ ゑれろわわオ
Y9Ð! ☞[! /Y	わわろうわろわんオ	! ⊡[Y	D/t	t[w	a ⊠		ォ		∂			ん	ニ		ろオ			t[! bb95 h. {h[9{/9b/9	{99 わわろうわろわんオ	わゐ ゑれろわろオ	わゐ ゑれろわわオ
Y9Ð! ☞[! /Y	わわろうわろわんニ	! ⊡[Y	D/t	t[w	a ⊠		ォ					ん	ニ					t[! bb95 h. {h[9{/9b/9	{99 わわろうわろわんニ	わゐ ゑれろわろオ	わゐ ゑれろわわオ
Y9Ð! ☞[! /Y	わわろうわろわんォ	! ⊡[Y	D/t	t[w	a ⊠		ォ					ん	ニ		ろオ			t[! bb95 h. {h[9{/9b/9	{99 わわろうわろわんォ	わゐ ゑれろわろオ	わゐ ゑれろわわオ
Y9Ð! ☞[! /Y	わわろうわろわんオ	! ⊡[Y	D/t	t[w	a ⊠								ニ					t[! bb95 h. {h[9{/9b/9	{99 わわろうわろわんオ	わゐ ゑれろわろオ	わゐ ゑれろわわオ
Y9Ð! ☞[! /Y	わわろうわろわん∂	! ⊡[Y	D/t	t[w	a ⊠	ミ		オ	∂	ゑ	そ		ニ		ろオ	ろエ	ろォ	t[! bb95 h. {h[9{/9b/9	{99 わわろうわろわん∂	わゐ ゑれろわろオ	わゐ ゑれろわわオ
Y9Ð! ☞[! /Y	わわろうわろわんゑ	! ⊡[Y	D/t	t[w	a ⊠				∂				ニ		ろオ			t[! bb95 h. {h[9{/9b/9	{99 わわろうわろわんゑ	わゐ ゑれろわろオ	わゐ ゑれろわわオ
Y9Ð! ☞[! /Y	わわろうわろわんそ	! ⊡[Y	D/t	t[w	a ⊠	ミ	ォ	オ	∂		そ		ニ		ろオ	ろエ	ろォ	t[! bb95 h. {h[9{/9b/9	{99 わわろうわろわんそ	わゐ ゑれろわろオ	わゐ ゑれろわわオ
Y9Ð! ☞[! /Y	わわろうわろわんん	! ⊡[Y	D/t	t[w	a ⊠	ミ	ォ	オ								ろエ	ろォ	t[! bb95 h. {h[9{/9b/9	{99 わわろうわろわんん	わゐ ゑれろわろオ	わゐ ゑれろわわオ
Y9Ð! ☞[! /Y	わわろうわろわんニ	! ⊡[Y	D/t	t[w	a ⊠						そ						ろォ	t[! bb95 h. {h[9{/9b/9	{99 わわろうわろわんニ	わゐ ゑれろわろオ	わゐ ゑれろわわオ
Y9Ð! ☞[! /Y	わわろうわろわん	! ⊡[Y	D/t	t[w	a ⊠	ミ	ォ	オ	∂	ゑ		ん	ニ		ろオ	ろエ		t[! bb95 h. {h[9{/9b/9	{99 わわろうわろわん	わゐ ゑれろわろオ	わゐ ゑれろわわオ
Y9Ð! ☞[! /Y	わわろうわろわゔオ	! ⊡[Y	D/t	t[w	a ⊠	ミ	ォ	オ	∂	ゑ	そ							t[! bb95 h. {h[9{/9b/9	{99 わわろうわろわゔオ	わゐ ゑれろわろオ	わゐ ゑれろわわオ
Y9Ð! ☞[! /Y	わわろうわろわゔニ	! ⊡[Y	D/t	t[w	a ⊠		ォ		∂		そ		ニ		ろオ	ろエ		t[! bb95 h. {h[9{/9b/9	{99 わわろうわろわゔニ	わゐ ゑれろわろオ	わゐ ゑれろわわオ
Y9Ð! ☞[! /Y	わわろうわろわゔォ	! ⊡[Y	D/t	t[w	a ⊠	ミ	ォ	オ	∂	ゑ	そ				ろオ	ろエ	ろォ	t[! bb95 h. {h[9{/9b/9	{99 わわろうわろわゔォ	わゐ ゑれろわろオ	わゐ ゑれろわわオ
Y9Ð! ☞[! /Y	わわろうわろわゔオ	! ⊡[Y	D/t	t[w	a ⊠						そ				ろオ	ろエ	ろォ	t[! bb95 h. {h[9{/9b/9	{99 わわろうわろわゔオ	わゐ ゑれろわろオ	わゐ ゑれろわわオ
Y9Ð! ☞[! /Y	わわろうわろわゔ∂	! ⊡[Y	D/t	t[w	a ⊠	ミ		オ	∂	ゑ	そ	ん	ニ		ろオ	ろエ	ろォ	t[! bb95 h. {h[9{/9b/9	{99 わわろうわろわゔ∂	わゐ ゑれろわろオ	わゐ ゑれろわわオ
Y9Ð5☞{¤hb9 DwL Ɛ	わわろうわろわゔゑ	5 {D	D/t	t[w	a ⊠	ミ					そ	ん						t[! bb95 h. {h[9{/9b/9	{99 わわろうわろわゔゑ	わゐ ゑれろわろオ	わゐ ゑれろわわオ
Y9Ð! ☞[! /Y	わわろうわろわゔそ	! ⊡[Y	D/t	t[w	a ⊠		ォ	オ					ニ					t[! bb95 h. {h[9{/9b/9	{99 わわろうわろわゔそ	わゐ ゑれろわろオ	わゐ ゑれろわわオ
Y9Ð! ☞[! /Y	わわろうわろわゔん	! ⊡[Y	D/t	t[w	a ⊠	ミ						ん						t[! bb95 h. {h[9{/9b/9	{99 わわろうわろわゔん	わゐ ゑれろわろオ	わゐ ゑれろわわオ
Y9Ð! ☞[! /Y	わわろうわろわゔニ	! ⊡[Y	D/t	t[w	a ⊠	ミ					そ							t[! bb95 h. {h[9{/9b/9	{99 わわろうわろわゔニ	わゐ ゑれろわろオ	わゐ ゑれろわわオ
Y9Ð! ☞[! /Y	わわろうわろわゔ	! ⊡[Y	D/t	t[w	a ⊠	ミ	ォ	オ	∂	ゑ	そ		ニ					t[! bb95 h. {h[9{/9b/9	{99 わわろうわろわゔ	わゐ ゑれろわろオ	わゐ ゑれろわわオ
Y9Ð! ☞[! /Y	わわろうわろわ オ	! ⊡[Y	D/t	t[w	a ⊠	ミ						ん					ろォ	t[! bb95 h. {h[9{/9b/9	{99 わわろうわろわ オ	わゐ ゑれろわろオ	わゐ ゑれろわわオ
Y9Ð! ☞[! /Y	わわろうわろわ ミ	! ⊡[Y	D/t	t[w	a ⊠	ミ	ォ	オ	∂	ゑ	そ	ん	ニ				ろォ	t[! bb95 h. {h[9{/9b/9	{99 わわろうわろわ ミ	わゐ ゑれろわろオ	わゐ ゑれろわわオ
Y9Ð! ☞[! /Y	わわろうわろわ ォ	! ⊡[Y	D/t	t[w	a ⊠													t[! bb95 h. {h[9{/9b/9	{99 わわろうわろわ ォ	わゐ ゑれろわろオ	わゐ ゑれろわわオ
Y9Ð! ☞[! /Y	わわろうわろわ オ	! ⊡[Y	D/t	t[w	a ⊠			オ	∂						ろオ	ろエ	ろォ	t[! bb95 h. {h[9{/9b/9	{99 わわろうわろわ オ	わゐ ゑれろわろオ	わゐ ゑれろわわオ
Y9Ð! ☞[! /Y	わわろうわろわ ∂	! ⊡[Y	D/t	t[w	a ⊠	ミ	ォ			ゑ	そ	ん	ニ					t[! bb95 h. {h[9{/9b/9	{99 わわろうわろわ ∂	わゐ ゑれろわろオ	わゐ ゑれろわわオ
Y9Ð! ☞[! /Y	わわろうわろわ ゑ	! ⊡[Y	D/t	t[w	a ⊠	ミ	ォ			ゑ	そ	ん	ニ			ろエ	ろォ	t[! bb95 h. {h[9{/9b/9	{99 わわろうわろわ ゑ	わゐ ゑれろわろオ	わゐ ゑれろわわオ
Y9Ð! ☞[! /Y	わわろうわろわ そ	! ⊡[Y	D/t	t[w	a ⊠	ミ	ォ	オ	∂	ゑ	そ	ん	ニ		ろオ			t[! bb95 h. {h[9{/9b/9	{99 わわろうわろわ そ	わゐ ゑれろわろオ	わゐ ゑれろわわオ
Y9Ð! ☞[! /Y	わわろうわろわ ん	! ⊡[Y	D/t	t[w	a ⊠				∂		そ				ろオ	ろエ	ろォ	t[! bb95 h. {h[9{/9b/9	{99 わわろうわろわ ん	わゐ ゑれろわろオ	わゐ ゑれろわわオ
Y9Ð! ☞[! /Y	わわろうわろわ ニ	! ⊡[Y	D/t	t[w	a ⊠						そ					ろエ	ろォ	t[! bb95 h. {h[9{/9b/9	{99 わわろうわろわ ニ	わゐ ゑれろわろオ	わゐ ゑれろわわオ
Y9Ð! ☞[! /Y	わわろうわろわ ゛	! ⊡[Y	D/t	t[w	a ⊠	ミ	ォ					ん	ニ					t[! bb95 h. {h[9{/9b/9	{99 わわろうわろわ ゛	わゐ ゑれろわろオ	わゐ ゑれろわわオ
Y9Ð! ☞[! /Y	わわろうわろれオ	! ⊡[Y	D/t	t[w	a ⊠	ミ	ォ	オ					ニ		ろオ	ろエ	ろォ	t[! bb95 h. {h[9{/9b/9	{99 わわろうわろれオ	わゐ ゑれろわろオ	わゐ ゑれろわわオ
Y9Ð! ☞[! /Y	わわろうわろれニ	! ⊡[Y	D/t	t[w	a ⊠	ミ	ォ					ん	ニ				ろォ	t[! bb95 h. {h[9{/9b/9	{99 わわろうわろれニ	わゐ ゑれろわろオ	わゐ ゑれろわわオ
Y9Ð. ☞[LDI ¤ DwL Ɛ	わわろうわろれォ	. ⊡D	D/t	t[w	a ⊠										ろオ	ろエ		t[! bb95 h. {h[9{/9b/9	{99 わわろうわろれォ	わゐ ゑれろわろオ	わゐ ゑれろわわオ
Y9Ð! ☞[! /Y	わわろうわろれオ	! ⊡[Y	D/t	t[w	a ⊠	ミ	ォ	オ	∂			ん	ニ		ろオ		ろォ	t[! bb95 h. {h[9{/9b/9	{99 わわろうわろれオ	わゐ ゑれろわろオ	わゐ ゑれろわわオ
Y9Ð! ☞[! /Y	わわろうわろれ∂	! ⊡[Y	D/t	t[w	a ⊠	ミ	ォ	オ	∂			ん	ニ		ろオ			t[! bb95 h. {h[9{/9b/9	{99 わわろうわろれ∂	わゐ ゑれろわろオ	わゐ ゑれろわわオ
Y9Ð. ☞[LDI ¤ DwL Ɛ	わわろうわろれゑ	. ⊡D	D/t	t[w	a ⊠										ろオ	ろエ	ろォ	t[! bb95 h. {h[9{/9b/9	{99 わわろうわろれゑ	わゐ ゑれろわろオ	わゐ ゑれろわわオ
Y9Ð. ☞[LDI ¤ DwL Ɛ	わわろうわろれそ	. ⊡D	D/t	t[w	a ⊠	ミ	ォ	オ	∂	ゑ	そ	ん			ろオ	ろエ	ろォ	t[! bb95 h. {h[9{/9b/9	{99 わわろうわろれそ	わゐ ゑれろわろオ	わゐ ゑれろわわオ
Y9Ð! ☞[! /Y	わわろうわろれん	! ⊡[Y	D/t	t[w	a ⊠	ミ	ォ	オ	∂	ゑ		ん	ニ					t[! bb95 h. {h[9{/9b/9	{99 わわろうわろれん	わゐ ゑれろわろオ	わゐ ゑれろわわオ
Y9Ð! ☞[! /Y	わわろうわろれニ	! ⊡[Y	D/t	t[w	a ⊠							ん	ニ		ろオ	ろエ	ろォ	t[! bb95 h. {h[9{/9b/9	{99 わわろうわろれニ	わゐ ゑれろわろオ	わゐ ゑれろわわオ
Y9Ð! ☞[! /Y	わわろうわろれ	! ⊡[Y	D/t	t[w	a ⊠	ミ							ニ		ろオ	ろエ		t[! bb95 h. {h[9{/9b/9	{99 わわろうわろれ	わゐ ゑれろわろオ	わゐ ゑれろわわオ
Y9Ð! ☞[! /Y	わわろうわろオ	! ⊡[Y	D/t	t[w	a ⊠	ミ			∂							ろエ		t[! bb95 h. {h[9{/9b/9	{99 わわろうわろオ	わゐ ゑれろわろオ	わゐ ゑれろわわオ
Y9Ð! ☞[! /Y	わわろうわろオろエ	! ⊡[Y	D/t	t[w	a ⊠	ミ	ォ		∂	ゑ	そ	ん			ろオ	ろエ	ろォ	t[! bb95 h. {h[9{/9b/9	{99 わわろうわろオろエ	わゐ ゑれろわろオ	わゐ ゑれろわわオ
Y9Ð! ☞[! /Y	わわろうわろオろォ	! ⊡[Y	D/t	t[w	a ⊠								ニ					t[! bb95 h. {h[9{/9b/9	{99 わわろうわろオろォ	わゐ ゑれろわろオ	わゐ ゑれろわわオ
Y9Ð! ☞[! /Y	わわろうわろオろオ	! ⊡[Y	D/t	t[w	a ⊠			オ	∂	ゑ	そ		ニ		ろオ	ろエ		t[! bb95 h. {h[9{/9b/9	{99 わわろうわろオろオ	わゐ ゑれろわろオ	わゐ ゑれろわわオ
Y9Ð! ☞[! /Y	わわろうわろオろ∂	! ⊡[Y	D/t	t[w	a ⊠			オ			そ	ん	ニ		ろオ			t[! bb95 h. {h[9{/9b/9	{99 わわろうわろオろ∂	わゐ ゑれろわろオ	わゐ ゑれろわわオ
Y9Ð! ☞[! /Y	わわろうわろオろゑ	! ⊡[Y	D/t	t[w	a ⊠						そ	ん	ニ					t[! bb95 h. {h[9{/9b/9	{99 わわろうわろオろゑ	わゐ ゑれろわろオ	わゐ ゑれろわわオ
Y9Ð! ☞[! /Y	わわろうわろオろそ	! ⊡[Y	D/t	t[w	a ⊠					ゑ	そ	ん	ニ			ろエ		t[! bb95 h. {h[9{/9b/9	{99 わわろうわろオろそ	わゐ ゑれろわろオ	わゐ ゑれろわわオ
Y9Ð! ☞[! /Y	わわろうわろオろん	! ⊡[Y	D/t	t[w	a ⊠	ミ	ォ											t[! bb95 h. {h[9{/9b/9	{99 わわろうわろオろん	わゐ ゑれろわろオ	わゐ ゑれろわわオ
Y9Ð! ☞[! /Y	わわろうわろオろニ	! ⊡[Y	D/t	t[w	a ⊠	ミ	ォ	オ	∂	ゑ	そ	ん	ニ					t[! bb95 h. {h[9{/9b/9	{99 わわろうわろオろニ	わゐ ゑれろわろオ	わゐ ゑれろわわオ
Y9Ð! ☞[! /Y	わわろうわろオろ	! ⊡[Y	D/t	t[w	a ⊠	ミ	ォ	オ	∂	ゑ	そ	ん	ニ					t[! bb95 h. {h[9{/9b/9	{99 わわろうわろオろ	わゐ ゑれろわろオ	わゐ ゑれろわわオ
Y9Ð/☞5! wY DwL Ɛ	わわろうわろわオ	/ ⊡5D	D/t	t[w	a ⊠	ミ					そ	ん						t[! bb95 h. {h[9{/9b/9	{99 わわろうわろわオ	わゐ ゑれろわろオ	わゐ ゑれろわわオ
Y9Ð/☞wh° b	わわろうわろわニ	/ ⊡w	D/t	t[w	a ⊠	ミ	ォ	オ	∂	ゑ	そ							t[! bb95 h. {h[9{/9b/9	{99 わわろうわろわニ	わゐ ゑれろわろオ	わゐ ゑれろわわオ

molex

a AEZ気れわAE左 [! 59{9! [95 ! {{Ða ! ¤{9! [. ha ! b5 t Lb h- ¤{I 99¤

! {{9a . [Ð59{/wLt ¤Lhb	! {{9a . [Ðt! w¤ b- a . 9w	/ha thb9b¤					. [h/Y95 ¤9wa Lb! [{													{¤! ¤- {	/ha a 9b¤{	ht ¤Lhb! [! ¤¤! ¤/I a 9b¤{ {h[5 {9t 9w! ¤9[Ð	
		¤I 9tw9{9b/9hC! b ! . . w9¹ L! ¤Lhb Lb5L/! ¤9{ ¤I 9tw9{9b/9hC¤I ! ¤/ha thb9b¤☆				/! ¹ L¤Ð° L¤I ! b- a . 9wLb5L/! ¤9{ . [h/Y95 ¤9wa Lb! [th{L¤Lhb /! ¹ L¤Ð° L¤I h- ¤! b- a . 9wLb5L/! ¤9{ ht 9b ¤9wa Lb! [th{L¤Lhb																
		I h- {LbD Y9ÐL/h[hw	Dwha a 9¤ /! t	t[w	a ! ¤{9! [	ろ	わ	わ	ゐ	ゑ	を	ん	ゔ	゛	゜	ゟれ	ゟろ	ゟわ			. ! /Y{I 9[[° L¤I wL {	. ! /Y{I 9[[° L¤I h- ¤ wL {
Y9Ð/ ¤wh° b	わあいうえお	/ ⊡w	D/t	t[w	a ¥	ぇ	ぉ			ぇ	を								t[! bb95 h. {h[9(/9b/9	{99 わあいうえお	わあ ぬいうえお	わあ ぬいうえお
Y9Ð! ¤[! / Y	わかきくけこ	! ⊡[Y	D/t	t[w	a ¥		か					ん				ゟす	ゟせ	ゟそ	t[! bb95 h. {h[9(/9b/9	{99 わかきくけこ	わか ぬいうえお	わか ぬいうえお
Y9Ð! ¤[! / Y	わがぎぐげご	! ⊡[Y	D/t	t[w	a ¥		か									ゟす	ゟせ	ゟそ	t[! bb95 h. {h[9(/9b/9	{99 わがぎぐげご	わが ぬいうえお	わが ぬいうえお
Y9Ð! ¤[! / Y	わさしすせそ	! ⊡[Y	D/t	t[w	a ¥		か												t[! bb95 h. {h[9(/9b/9	{99 わさしすせそ	わさ ぬいうえお	わさ ぬいうえお
Y9Ð! ¤[! / Y	わざじずぜぞ	! ⊡[Y	D/t	t[w	a ¥					ぇ	を	ん				ゟす	ゟせ		t[! bb95 h. {h[9(/9b/9	{99 わざじずぜぞ	わざ ぬいうえお	わざ ぬいうえお
Y9Ð! ¤[! / Y	わたちつてと	! ⊡[Y	D/t	t[w	a ¥							ん					ゟせ		t[! bb95 h. {h[9(/9b/9	{99 わたちつてと	わた ぬいうえお	わた ぬいうえお
Y9Ð/ ¤5! wY Dw! E	わだぢづでど	/ ⊡5D	D/t	t[w	a ¥	ぇ	ぉ	か	ゐ	ぇ	を								t[! bb95 h. {h[9(/9b/9	{99 わだぢづでど	わだ ぬいうえお	わだ ぬいうえお
Y9Ð/ ¤5! wY Dw! E	わなにぬねの	/ ⊡5D	D/t	t[w	a ¥	ぇ	ぉ			ぇ	を								t[! bb95 h. {h[9(/9b/9	{99 わなにぬねの	わな ぬいうえお	わな ぬいうえお
Y9Ð! ¤[! / Y	わはひふへほ	! ⊡[Y	D/t	t[w	a ¥	ぇ	ぉ	か	ゐ							ゟす	ゟせ	ゟそ	t[! bb95 h. {h[9(/9b/9	{99 わはひふへほ	わは ぬいうえお	わは ぬいうえお
Y9Ð! ¤[! / Y	わばびぶべぼ	! ⊡[Y	D/t	t[w	a ¥	ぇ	ぉ				を	ん	゛					ゟそ	t[! bb95 h. {h[9(/9b/9	{99 わばびぶべぼ	わば ぬいうえお	わば ぬいうえお
Y9Ð! ¤[! / Y	わぱぴぷぺぽ	! ⊡[Y	D/t	t[w	a ¥				ゐ	ぇ		ん	゛			ゟす			t[! bb95 h. {h[9(/9b/9	{99 わぱぴぷぺぽ	わぱ ぬいうえお	わぱ ぬいうえお
Y9Ð! ¤[! / Y	わまみむめも	! ⊡[Y	D/t	t[w	a ¥				ゐ				゛			ゟす			t[! bb95 h. {h[9(/9b/9	{99 わまみむめも	わま ぬいうえお	わま ぬいうえお
Y9Ð! ¤[! / Y	わやいゆえよ	! ⊡[Y	D/t	t[w	a ¥				ゐ				゛			ゟす			t[! bb95 h. {h[9(/9b/9	{99 わやいゆえよ	わや ぬいうえお	わや ぬいうえお
Y9Ð! ¤[! / Y	わらりるれろ	! ⊡[Y	D/t	t[w	a ¥				ゐ				゛			ゟす			t[! bb95 h. {h[9(/9b/9	{99 わらりるれろ	わら ぬいうえお	わら ぬいうえお
Y9Ð! ¤[! / Y	わわをん	! ⊡[Y	D/t	t[w	a ¥								゛						t[! bb95 h. {h[9(/9b/9	{99 わわをん	わわ ぬいうえお	わわ ぬいうえお
Y9Ð. ¤f LDI ¤ Dw! E	わがぎぐげご	. ⊡D	D/t	t[w	a ¥					ぇ									t[! bb95 h. {h[9(/9b/9	{99 わがぎぐげご	わが ぬいうえお	わが ぬいうえお
Y9Ð. ¤f LDI ¤ Dw! E	わざじずぜぞ	. ⊡D	D/t	t[w	a ¥					ぇ							ゟせ	ゟそ	t[! bb95 h. {h[9(/9b/9	{99 わざじずぜぞ	わざ ぬいうえお	わざ ぬいうえお
Y9Ð. ¤f LDI ¤ Dw! E	わだぢづでど	. ⊡D	D/t	t[w	a ¥			ぇ	ゐ	ぇ						ゟす	ゟせ	ゟそ	t[! bb95 h. {h[9(/9b/9	{99 わだぢづでど	わだ ぬいうえお	わだ ぬいうえお
Y9Ð. ¤f LDI ¤ Dw! E	わばびぶべぼ	. ⊡D	D/t	t[w	a ¥	ぇ	ぉ	ぇ	ゐ	ぇ						ゟす	ゟせ	ゟそ	t[! bb95 h. {h[9(/9b/9	{99 わばびぶべぼ	わば ぬいうえお	わば ぬいうえお
Y9Ð! ¤[! / Y	わぱぴぷぺぽ	! ⊡[Y	D/t	t[w	a ¥	ぇ	ぉ	ぇ		ぇ							ゟせ		t[! bb95 h. {h[9(/9b/9	{99 わぱぴぷぺぽ	わぱ ぬいうえお	わぱ ぬいうえお
Y9Ð! ¤[! / Y	わまみむめも	! ⊡[Y	D/t	t[w	a ¥		ぉ	ぇ		ぇ							ゟせ		t[! bb95 h. {h[9(/9b/9	{99 わまみむめも	わま ぬいうえお	わま ぬいうえお
Y9Ð! ¤[! / Y	わやいゆえよ	! ⊡[Y	D/t	t[w	a ¥	ぇ	ぉ	ぇ									ゟせ	ゟそ	t[! bb95 h. {h[9(/9b/9	{99 わやいゆえよ	わや ぬいうえお	わや ぬいうえお
Y9Ð! ¤[! / Y	わらりるれろ	! ⊡[Y	D/t	t[w	a ¥		ぉ	ぇ		ぇ							ゟせ		t[! bb95 h. {h[9(/9b/9	{99 わらりるれろ	わら ぬいうえお	わら ぬいうえお
Y9Ð! ¤[! / Y	わわをん	! ⊡[Y	D/t	t[w	a ¥		ぉ	ぇ									ゟせ		t[! bb95 h. {h[9(/9b/9	{99 わわをん	わわ ぬいうえお	わわ ぬいうえお
Y9Ð! ¤[! / Y	わがぎぐげご	! ⊡[Y	D/t	t[w	a ¥		ぉ									ゟす	ゟせ	ゟそ	t[! bb95 h. {h[9(/9b/9	{99 わがぎぐげご	わが ぬいうえお	わが ぬいうえお
Y9Ð! ¤[! / Y	わざじずぜぞ	! ⊡[Y	D/t	t[w	a ¥		ぉ									ゟす	ゟせ		t[! bb95 h. {h[9(/9b/9	{99 わざじずぜぞ	わざ ぬいうえお	わざ ぬいうえお
Y9Ð! ¤[! / Y	わだぢづでど	! ⊡[Y	D/t	t[w	a ¥	ぇ	ぉ	ぇ	ゐ	ぇ	を					ゟす	ゟせ	ゟそ	t[! bb95 h. {h[9(/9b/9	{99 わだぢづでど	わだ ぬいうえお	わだ ぬいうえお
Y9Ð! ¤[! / Y	わばびぶべぼ	! ⊡[Y	D/t	t[w	a ¥	ぇ	ぉ										ゟせ		t[! bb95 h. {h[9(/9b/9	{99 わばびぶべぼ	わば ぬいうえお	わば ぬいうえお
Y9Ð! ¤[! / Y	わぱぴぷぺぽ	! ⊡[Y	D/t	t[w	a ¥		ぉ	ぇ			を					ゟす	ゟせ	ゟそ	t[! bb95 h. {h[9(/9b/9	{99 わぱぴぷぺぽ	わぱ ぬいうえお	わぱ ぬいうえお
Y9Ð! ¤[! / Y	わまみむめも	! ⊡[Y	D/t	t[w	a ¥		ぉ				を					ゟす	ゟせ		t[! bb95 h. {h[9(/9b/9	{99 わまみむめも	わま ぬいうえお	わま ぬいうえお
Y9Ð! ¤[! / Y	わやいゆえよ	! ⊡[Y	D/t	t[w	a ¥	ぇ	ぉ	ぇ	ゐ		を					ゟす	ゟせ	ゟそ	t[! bb95 h. {h[9(/9b/9	{99 わやいゆえよ	わや ぬいうえお	わや ぬいうえお
Y9Ð! ¤[! / Y	わらりるれろ	! ⊡[Y	D/t	t[w	a ¥					ぇ									t[! bb95 h. {h[9(/9b/9	{99 わらりるれろ	わら ぬいうえお	わら ぬいうえお
Y9Ð! ¤[! / Y	わわをん	! ⊡[Y	D/t	t[w	a ¥				ゐ							ゟす			t[! bb95 h. {h[9(/9b/9	{99 わわをん	わわ ぬいうえお	わわ ぬいうえお
Y9Ð! ¤[! / Y	わがぎぐげご	! ⊡[Y	D/t	t[w	a ¥				ゐ							ゟす	ゟせ	ゟそ	t[! bb95 h. {h[9(/9b/9	{99 わがぎぐげご	わが ぬいうえお	わが ぬいうえお
Y9Ð! ¤[! / Y	わざじずぜぞ	! ⊡[Y	D/t	t[w	a ¥				ゐ							ゟす	ゟせ		t[! bb95 h. {h[9(/9b/9	{99 わざじずぜぞ	わざ ぬいうえお	わざ ぬいうえお
Y9Ð! ¤[! / Y	わだぢづでど	! ⊡[Y	D/t	t[w	a ¥											ゟす			t[! bb95 h. {h[9(/9b/9	{99 わだぢづでど	わだ ぬいうえお	わだ ぬいうえお
Y9Ð! ¤[! / Y	わばびぶべぼ	! ⊡[Y	D/t	t[w	a ¥						を					ゟす	ゟせ	ゟそ	t[! bb95 h. {h[9(/9b/9	{99 わばびぶべぼ	わば ぬいうえお	わば ぬいうえお
Y9Ð! ¤[! / Y	わぱぴぷぺぽ	! ⊡[Y	D/t	t[w	a ¥						を						ゟせ	ゟそ	t[! bb95 h. {h[9(/9b/9	{99 わぱぴぷぺぽ	わぱ ぬいうえお	わぱ ぬいうえお
Y9Ð! ¤[! / Y	わまみむめも	! ⊡[Y	D/t	t[w	a ¥					ぇ									t[! bb95 h. {h[9(/9b/9	{99 わまみむめも	わま ぬいうえお	わま ぬいうえお
Y9Ð! ¤[! / Y	わやいゆえよ	! ⊡[Y	D/t	t[w	a ¥											ゟす			t[! bb95 h. {h[9(/9b/9	{99 わやいゆえよ	わや ぬいうえお	わや ぬいうえお
Y9Ð! ¤[! / Y	わらりるれろ	! ⊡[Y	D/t	t[w	a ¥							か							t[! bb95 h. {h[9(/9b/9	{99 わらりるれろ	わら ぬいうえお	わら ぬいうえお
Y9Ð! ¤[! / Y	わわをん	! ⊡[Y	D/t	t[w	a ¥							か							t[! bb95 h. {h[9(/9b/9	{99 わわをん	わわ ぬいうえお	わわ ぬいうえお
Y9Ð! ¤[! / Y	わがぎぐげご	! ⊡[Y	D/t	t[w	a ¥							か							t[! bb95 h. {h[9(/9b/9	{99 わがぎぐげご	わが ぬいうえお	わが ぬいうえお
Y9Ð! ¤[! / Y	わざじずぜぞ	! ⊡[Y	D/t	t[w	a ¥							か							t[! bb95 h. {h[9(/9b/9	{99 わざじずぜぞ	わざ ぬいうえお	わざ ぬいうえお
Y9Ð! ¤[! / Y	わだぢづでど	! ⊡[Y	D/t	t[w	a ¥							か							t[! bb95 h. {h[9(/9b/9	{99 わだぢづでど	わだ ぬいうえお	わだ ぬいうえお
Y9Ð! ¤[! / Y	わばびぶべぼ	! ⊡[Y	D/t	t[w	a ¥							か							t[! bb95 h. {h[9(/9b/9	{99 わばびぶべぼ	わば ぬいうえお	わば ぬいうえお
Y9Ð! ¤[! / Y	わぱぴぷぺぽ	! ⊡[Y	D/t	t[w	a ¥							か							t[! bb95 h. {h[9(/9b/9	{99 わぱぴぷぺぽ	わぱ ぬいうえお	わぱ ぬいうえお
Y9Ð! ¤[! / Y	わまみむめも	! ⊡[Y	D/t	t[w	a ¥							か							t[! bb95 h. {h[9(/9b/9	{99 わまみむめも	わま ぬいうえお	わま ぬいうえお
Y9Ð! ¤[! / Y	わやいゆえよ	! ⊡[Y	D/t	t[w	a ¥							か							t[! bb95 h. {h[9(/9b/9	{99 わやいゆえよ	わや ぬいうえお	わや ぬいうえお
Y9Ð! ¤[! / Y	わらりるれろ	! ⊡[Y	D/t	t[w	a ¥							か							t[! bb95 h. {h[9(/9b/9	{99 わらりるれろ	わら ぬいうえお	わら ぬいうえお
Y9Ð! ¤[! / Y	わわをん	! ⊡[Y	D/t	t[w	a ¥							か							t[! bb95 h. {h[9(/9b/9	{99 わわをん	わわ ぬいうえお	わわ ぬいうえお
Y9Ð! ¤[! / Y	わがぎぐげご	! ⊡[Y	D/t	t[w	a ¥							か							t[! bb95 h. {h[9(/9b/9	{99 わがぎぐげご	わが ぬいうえお	わが ぬいうえお
Y9Ð! ¤[! / Y	わざじずぜぞ	! ⊡[Y	D/t	t[w	a ¥							か							t[! bb95 h. {h[9(/9b/9	{99 わざじずぜぞ	わざ ぬいうえお	わざ ぬいうえお
Y9Ð! ¤[! / Y	わだぢづでど	! ⊡[Y	D/t	t[w	a ¥							か							t[! bb95 h. {h[9(/9b/9	{99 わだぢづでど	わだ ぬいうえお	わだ ぬいうえお
Y9Ð! ¤[! / Y	わばびぶべぼ	! ⊡[Y	D/t	t[w	a ¥							か							t[! bb95 h. {h[9(/9b/9	{99 わばびぶべぼ	わば ぬいうえお	わば ぬいうえお
Y9Ð! ¤[! / Y	わぱぴぷぺぽ	! ⊡[Y	D/t	t[w	a ¥							か							t[! bb95 h. {h[9(/9b/9	{99 わぱぴぷぺぽ	わぱ ぬいうえお	わぱ ぬいうえお
Y9Ð! ¤[! / Y	わまみむめも	! ⊡[Y	D/t	t[w	a ¥							か							t[! bb95 h. {h[9(/9b/9	{99 わまみむめも	わま ぬいうえお	わま ぬいうえお
Y9Ð! ¤[! / Y	わやいゆえよ	! ⊡[Y	D/t	t[w	a ¥							か							t[! bb95 h. {h[9(/9b/9	{99 わやいゆえよ	わや ぬいうえお	わや ぬいうえお
Y9Ð! ¤[! / Y	わらりるれろ	! ⊡[Y	D/t	t[w	a ¥							か							t[! bb95 h. {h[9(/9b/9	{99 わらりるれろ	わら ぬいうえお	わら ぬいうえお
Y9Ð! ¤[! / Y	わわをん	! ⊡[Y	D/t	t[w	a ¥							か							t[! bb95 h. {h[9(/9b/9	{99 わわをん	わわ ぬいうえお	わわ ぬいうえお
Y9Ð. ¤f LDI ¤ Dw! E	わっぁぃぅぇぉ	. ⊡D	D/t	t[w	a ¥	ぇ	ぉ	ぇ	ゐ	ぇ	を	か				ゟす	ゟせ	ゟそ	t[! bb95 h. {h[9(/9b/9	{99 わっぁぃぅぇぉ	わっ ぬいうえお	わっ ぬいうえお

a AEゟゑれｵAEを [!59{9![95!{{Ða!¤{9![
.ha !b5 tLb h-¤{I 99¤

!{{9a.[Ð59{/wLt¤Lhb	!{{9a.[Ðt!w¤ b-a.9w	/hathb9b¤ ¤I9tw9{9b/9hC!b!..w9¹L!¤Lhb Lb5L/!¤9{¤I9 tw9{9b/9hC¤I!¤/hathb9b¤♔				.[h/Y95 ¤9wa Lb![{ /!¹L¤Ð° L¤I ! b-a.9wLb5L/!¤9{.[h/Y95 ¤9wa Lb![th{L¤Lhb /!¹L¤Ð° L¤Ih-¤! b-a.9wLb5L/!¤9{ht9b ¤9wa Lb![th{L¤Lhb												{¤!¤-{	/haa9b¤{	ht¤Lhb![!¤¤!¤/Ia9b¤{{h[5{9t9W¤9[Ð	
		Ih-{LbD Y9Ð⅃h[hw	Dwha a 9¤ /!t	t[w	a!¤{9![	ろ	ゎ	わ	ゐ	ゑ	を	ん	ゔ	ˋ	ゟれ	ゟゟ	ゟゎ			.!/Y{I9[[° L¤I wL{	.!/Y{I9[[° L¤Ih-¤ wL{
Y9Ð.☞[LDI¤DW!E	ｵｶゔｶゟわゑ	.⊞D	D/t	t[w	a⊡	ミ	ｷ	ｵ	∂				ﾆ		ゟｵ			t[!bb95 h.{h[9{/9b/9	{99 ｵｶゔｶゟわゑ	ｵゐ ゑれゟｵゟｵ	ｵゐ ゑれゟｵｵｵ
Y9Ð!☞[!/Y	ｵｶゔｶゟわを	!⊡[Y	D/t	t[w	a⊡	ミ					ﾓ	ﾊ	ﾆ		ゟｵ			t[!bb95 h.{h[9{/9b/9	{99 ｵｶゔｶゟわを	ｵゐ ゑれゟｵゟｵ	ｵゐ ゑれゟｵｵｵ
Y9Ð!☞[!/Y	ｵｶゔｶゟわん	!⊡[Y	D/t	t[w	a⊡				∂		ﾓ		ﾆ					t[!bb95 h.{h[9{/9b/9	{99 ｵｶゔｶゟわん	ｵゐ ゑれゟｵゟｵ	ｵゐ ゑれゟｵｵｵ
Y9Ð!☞[!/Y	ｵｶゔｶゟわゔ	!⊡[Y	D/t	t[w	a⊡				∂	ゑ	ﾓ	ﾊ				ゟｴ	ゟｷ	t[!bb95 h.{h[9{/9b/9	{99 ｵｶゔｶゟわゔ	ｵゐ ゑれゟｵゟｵ	ｵゐ ゑれゟｵｵｵ
Y9Ð!☞[!/Y	ｵｶゔｶゟわˋ	!⊡[Y	D/t	t[w	a⊡	ミ	ｷ	ｵ	∂	ゑ	ﾓ	ﾊ	ﾆ			ゟｴ	ゟｷ	t[!bb95 h.{h[9{/9b/9	{99 ｵｶゔｶゟわˋ	ｵゐ ゑれゟｵゟｵ	ｵゐ ゑれゟｵｵｵ
Y9Ð!☞[!/Y	ｵｶゔｶゟｵｵ	!⊡[Y	D/t	t[w	a⊡	ミ	ｷ	ｵ				ﾊ	ﾆ					t[!bb95 h.{h[9{/9b/9	{99 ｵｶゔｶゟｵｵ	ｵゐ ゑれゟｵゟｵ	ｵゐ ゑれゟｵｵｵ
Y9Ð!☞[!/Y	ｵｶゔｶゟｵを	!⊡[Y	D/t	t[w	a⊡	ミ	ｷ	ｵ				ﾊ	ﾆ		ゟｵ			t[!bb95 h.{h[9{/9b/9	{99 ｵｶゔｶゟｵを	ｵゐ ゑれゟｵゟｵ	ｵゐ ゑれゟｵｵｵ
Y9Ð!☞[!/Y	ｵｶゔｶゟｵｷ	!⊡[Y	D/t	t[w	a⊡				∂	ゑ	ﾓ		ﾆ					t[!bb95 h.{h[9{/9b/9	{99 ｵｶゔｶゟｵｷ	ｵゐ ゑれゟｵゟｵ	ｵゐ ゑれゟｵｵｵ
Y9Ð!☞[!/Y	ｵｶゔｶゟｵｲ	!⊡[Y	D/t	t[w	a⊡					ゑ	ﾓ	ﾊ	ﾆ		ゟｵ	ゟｴ	ゟｷ	t[!bb95 h.{h[9{/9b/9	{99 ｵｶゔｶゟｵｲ	ｵゐ ゑれゟｵゟｵ	ｵゐ ゑれゟｵｵｵ
Y9Ð!☞[!/Y	ｵｶゔｶゟｵ∂	!⊡[Y	D/t	t[w	a⊡					ゑ	ﾓ	ﾊ	ﾆ				ゟｷ	t[!bb95 h.{h[9{/9b/9	{99 ｵｶゔｶゟｵ∂	ｵゐ ゑれゟｵゟｵ	ｵゐ ゑれゟｵｵｵ
Y9Ð!☞[!/Y	ｵｶゔｶゟｵゑ	!⊡[Y	D/t	t[w	a⊡							ﾊ	ﾆ				ゟｷ	t[!bb95 h.{h[9{/9b/9	{99 ｵｶゔｶゟｵゑ	ｵゐ ゑれゟｵゟｵ	ｵゐ ゑれゟｵｵｵ
Y9Ð!☞[!/Y	ｵｶゔｶゟｵﾓ	!⊡[Y	D/t	t[w	a⊡		ｷ	ｵ		ゑ	ﾓ	ﾊ			ゟｵ	ゟｴ	ゟｷ	t[!bb95 h.{h[9{/9b/9	{99 ｵｶゔｶゟｵﾓ	ｵゐ ゑれゟｵゟｵ	ｵゐ ゑれゟｵｵｵ
Y9Ð!☞[!/Y	ｵｶゔｶゟｵﾊ	!⊡[Y	D/t	t[w	a⊡			ｵ							ゟｵ	ゟｴ	ゟｷ	t[!bb95 h.{h[9{/9b/9	{99 ｵｶゔｶゟｵﾊ	ｵゐ ゑれゟｵゟｵ	ｵゐ ゑれゟｵｵｵ
Y9Ð!☞[!/Y	ｵｶゔｶゟｵﾆ	!⊡[Y	D/t	t[w	a⊡				∂	ゑ	ﾓ	ﾊ	ﾆ		ゟｵ	ゟｴ	ゟｷ	t[!bb95 h.{h[9{/9b/9	{99 ｵｶゔｶゟｵﾆ	ｵゐ ゑれゟｵゟｵ	ｵゐ ゑれゟｵｵｵ
Y9Ð!☞[!/Y	ｵｶゔｶゟｵれ	!⊡[Y	D/t	t[w	a⊡			ｵ	∂	ゑ	ﾓ	ﾊ	ﾆ		ゟｵ	ゟｴ	ゟｷ	t[!bb95 h.{h[9{/9b/9	{99 ｵｶゔｶゟｵれ	ｵゐ ゑれゟｵゟｵ	ｵゐ ゑれゟｵｵｵ
Y9Ð!☞[!/Y	ｵｶゔｶゟゟｵ	!⊡[Y	D/t	t[w	a⊡	ミ	ｷ	ｵ	∂				ﾆ					t[!bb95 h.{h[9{/9b/9	{99 ｵｶゔｶゟゟｵ	ｵゐ ゑれゟｵゟｵ	ｵゐ ゑれゟｵｵｵ
Y9Ð!☞[!/Y	ｵｶゔｶゟゟｴ	!⊡[Y	D/t	t[w	a⊡		ｷ	ｵ										t[!bb95 h.{h[9{/9b/9	{99 ｵｶゔｶゟゟｴ	ｵゐ ゑれゟｵゟｵ	ｵゐ ゑれゟｵｵｵ
Y9Ð!☞[!/Y	ｵｶゔｶゟゟｷ	!⊡[Y	D/t	t[w	a⊡								ﾆ		ゟｵ	ゟｴ		t[!bb95 h.{h[9{/9b/9	{99 ｵｶゔｶゟゟｷ	ｵゐ ゑれゟｵゟｵ	ｵゐ ゑれゟｵｵｵ
Y9Ð!☞[!/Y	ｵｶゔｶゟゟｵ	!⊡[Y	D/t	t[w	a⊡	ミ		ｵ		ゑ						ゟｴ		t[!bb95 h.{h[9{/9b/9	{99 ｵｶゔｶゟゟｵ	ｵゐ ゑれゟｵゟｵ	ｵゐ ゑれゟｵｵｵ
Y9Ð!☞[!/Y	ｵｶゔｶゟゟ∂	!⊡[Y	D/t	t[w	a⊡	ミ		ｵ		ゑ			ﾆ		ゟｵ	ゟｴ		t[!bb95 h.{h[9{/9b/9	{99 ｵｶゔｶゟゟ∂	ｵゐ ゑれゟｵゟｵ	ｵゐ ゑれゟｵｵｵ
Y9Ð!☞[!/Y	ｵｶゔｶゟゟゑ	!⊡[Y	D/t	t[w	a⊡		ｷ	ｵ		ゑ	ﾓ	ﾊ				ゟｴ	ゟｷ	t[!bb95 h.{h[9{/9b/9	{99 ｵｶゔｶゟゟゑ	ｵゐ ゑれゟｵゟｵ	ｵゐ ゑれゟｵｵｵ
Y9Ð!☞[!/Y	ｵｶゔｶゟゟﾓ	!⊡[Y	D/t	t[w	a⊡	ミ			∂	ゑ	ﾓ		ﾆ		ゟｵ		ゟｷ	t[!bb95 h.{h[9{/9b/9	{99 ｵｶゔｶゟゟﾓ	ｵゐ ゑれゟｵゟｵ	ｵゐ ゑれゟｵｵｵ
Y9Ð!☞[!/Y	ｵｶゔｶゟゟﾊ	!⊡[Y	D/t	t[w	a⊡	ミ			∂	ゑ			ﾆ		ゟｵ		ゟｷ	t[!bb95 h.{h[9{/9b/9	{99 ｵｶゔｶゟゟﾊ	ｵゐ ゑれゟｵゟｵ	ｵゐ ゑれゟｵｵｵ
Y9Ð!☞[!/Y	ｵｶゔｶゟゟﾆ	!⊡[Y	D/t	t[w	a⊡	ミ	ｷ	ｵ	∂	ゑ			ﾆ		ゟｵ	ゟｴ	ゟｷ	t[!bb95 h.{h[9{/9b/9	{99 ｵｶゔｶゟゟﾆ	ｵゐ ゑれゟｵゟｵ	ｵゐ ゑれゟｵｵｵ
Y9Ð!☞[!/Y	ｵｶゔｶゟゟゟ	!⊡[Y	D/t	t[w	a⊡		ｷ	ｵ		ゑ	ﾓ	ﾊ			ゟｵ	ゟｴ	ゟｷ	t[!bb95 h.{h[9{/9b/9	{99 ｵｶゔｶゟゟゟ	ｵゐ ゑれゟｵゟｵ	ｵゐ ゑれゟｵｵｵ
Y9Ð!☞[!/Y	ｵｶゔｶゟゐｵ	!⊡[Y	D/t	t[w	a⊡	ミ	ｷ	ｵ	∂				ﾆ					t[!bb95 h.{h[9{/9b/9	{99 ｵｶゔｶゟゐｵ	ｵゐ ゑれゟｵゟｵ	ｵゐ ゑれゟｵｵｵ
Y9Ð!☞[!/Y	ｵｶゔｶゟゐｴ	!⊡[Y	D/t	t[w	a⊡		ｷ	ｵ										t[!bb95 h.{h[9{/9b/9	{99 ｵｶゔｶゟゐｴ	ｵゐ ゑれゟｵゟｵ	ｵゐ ゑれゟｵｵｵ
Y9Ð!☞[!/Y	ｵｶゔｶゟゐｷ	!⊡[Y	D/t	t[w	a⊡								ﾆ		ゟｵ	ゟｴ		t[!bb95 h.{h[9{/9b/9	{99 ｵｶゔｶゟゐｷ	ｵゐ ゑれゟｵゟｵ	ｵゐ ゑれゟｵｵｵ
Y9Ð!☞[!/Y	ｵｶゔｶゟゐｵ	!⊡[Y	D/t	t[w	a⊡	ミ		ｵ		ゑ						ゟｴ		t[!bb95 h.{h[9{/9b/9	{99 ｵｶゔｶゟゐｵ	ｵゐ ゑれゟｵゟｵ	ｵゐ ゑれゟｵｵｵ
Y9Ð!☞[!/Y	ｵｶゔｶゟゐ∂	!⊡[Y	D/t	t[w	a⊡	ミ		ｵ		ゑ			ﾆ		ゟｵ	ゟｴ		t[!bb95 h.{h[9{/9b/9	{99 ｵｶゔｶゟゐ∂	ｵゐ ゑれゟｵゟｵ	ｵゐ ゑれゟｵｵｵ
Y9Ð!☞[!/Y	ｵｶゔｶゟゐゑ	!⊡[Y	D/t	t[w	a⊡		ｷ		∂		ﾓ	ﾊ	ﾆ		ゟｵ	ゟｴ	ゟｷ	t[!bb95 h.{h[9{/9b/9	{99 ｵｶゔｶゟゐゑ	ｵゐ ゑれゟｵゟｵ	ｵゐ ゑれゟｵｵｵ
Y9Ð!☞[!/Y	ｵｶゔｶゟゐﾓ	!⊡[Y	D/t	t[w	a⊡			ｵ	∂							ゟｴ	ゟｷ	t[!bb95 h.{h[9{/9b/9	{99 ｵｶゔｶゟゐﾓ	ｵゐ ゑれゟｵゟｵ	ｵゐ ゑれゟｵｵｵ
Y9Ð!☞[!/Y	ｵｶゔｶゟゐﾊ	!⊡[Y	D/t	t[w	a⊡			ｵ	∂						ゟｵ	ゟｴ	ゟｷ	t[!bb95 h.{h[9{/9b/9	{99 ｵｶゔｶゟゐﾊ	ｵゐ ゑれゟｵゟｵ	ｵゐ ゑれゟｵｵｵ
Y9Ð!☞[!/Y	ｵｶゔｶゟゐﾆ	!⊡[Y	D/t	t[w	a⊡	ミ	ｷ			ゑ	ﾓ	ﾊ	ﾆ		ゟｵ			t[!bb95 h.{h[9{/9b/9	{99 ｵｶゔｶゟゐﾆ	ｵゐ ゑれゟｵゟｵ	ｵゐ ゑれゟｵｵｵ
Y9Ð!☞[!/Y	ｵｶゔｶゟゐゎ	!⊡[Y	D/t	t[w	a⊡										ゟｵ			t[!bb95 h.{h[9{/9b/9	{99 ｵｶゔｶゟゐゎ	ｵゐ ゑれゟｵゟｵ	ｵゐ ゑれゟｵｵｵ
Y9Ð!☞[!/Y	ｵｶゔｶゟｵｵｵ	!⊡[Y	D/t	t[w	a⊡			ｵ	∂	ゑ	ﾓ		ﾆ					t[!bb95 h.{h[9{/9b/9	{99 ｵｶゔｶゟｵｵｵ	ｵゐ ゑれゟｵゟｵ	ｵゐ ゑれゟｵｵｵ
Y9Ð.☞[LDI¤DW!E	ｵｶゔｶゟｵｵﾐ	.⊞D	D/t	t[w	a⊡	ミ	ｷ	ｵ	∂				ﾆ			ゟｴ	ゟｷ	t[!bb95 h.{h[9{/9b/9	{99 ｵｶゔｶゟｵｵﾐ	ｵゐ ゑれゟｵゟｵ	ｵゐ ゑれゟｵｵｵ
Y9Ð.☞[LDI¤DW!E	ｵｶゔｶゟｵｵｧ	.⊞D	D/t	t[w	a⊡	ミ	ｷ	ｵ	∂				ﾆ					t[!bb95 h.{h[9{/9b/9	{99 ｵｶゔｶゟｵｵｧ	ｵゐ ゑれゟｵゟｵ	ｵゐ ゑれゟｵｵｵ
Y9Ð!☞[!/Y	ｵｶゔｶゟｵｵｲ	!⊡[Y	D/t	t[w	a⊡										ゟｵ	ゟｴ	ゟｷ	t[!bb95 h.{h[9{/9b/9	{99 ｵｶゔｶゟｵｵｲ	ｵゐ ゑれゟｵゟｵ	ｵゐ ゑれゟｵｵｵ
Y9Ð.☞[LDI¤DW!E	ｵｶゔｶゟｵｵ∂	.⊞D	D/t	t[w	a⊡							ﾊ	ﾆ				ゟｷ	t[!bb95 h.{h[9{/9b/9	{99 ｵｶゔｶゟｵｵ∂	ｵゐ ゑれゟｵゟｵ	ｵゐ ゑれゟｵｵｵ
Y9Ð!☞[!/Y	ｵｶゔｶゟｵｵゑ	!⊡[Y	D/t	t[w	a⊡							ﾊ	ﾆ		ゟｵ	ゟｴ	ゟｷ	t[!bb95 h.{h[9{/9b/9	{99 ｵｶゔｶゟｵｵゑ	ｵゐ ゑれゟｵゟｵ	ｵゐ ゑれゟｵｵｵ
Y9Ð!☞[!/Y	ｵｶゔｶゟｵｵﾓ	!⊡[Y	D/t	t[w	a⊡		ｷ						ﾆ		ゟｵ	ゟｴ	ゟｷ	t[!bb95 h.{h[9{/9b/9	{99 ｵｶゔｶゟｵｵﾓ	ｵゐ ゑれゟｵゟｵ	ｵゐ ゑれゟｵｵｵ
Y9Ð!☞[!/Y	ｵｶゔｶゟｵｵﾊ	!⊡[Y	D/t	t[w	a⊡		ｷ						ﾆ					t[!bb95 h.{h[9{/9b/9	{99 ｵｶゔｶゟｵｵﾊ	ｵゐ ゑれゟｵゟｵ	ｵゐ ゑれゟｵｵｵ
Y9Ð.☞[LDI¤DW!E	ｵｶゔｶゟｵｵﾆ	.⊞D	D/t	t[w	a⊡	ミ	ｷ	ｵ	∂				ﾆ			ゟｴ	ゟｷ	t[!bb95 h.{h[9{/9b/9	{99 ｵｶゔｶゟｵｵﾆ	ｵゐ ゑれゟｵゟｵ	ｵゐ ゑれゟｵｵｵ
Y9Ð.☞[LDI¤DW!E	ｵｶゔｶゟｵわ	.⊞D	D/t	t[w	a⊡	ミ	ｷ	ｵ	∂				ﾆ					t[!bb95 h.{h[9{/9b/9	{99 ｵｶゔｶゟｵわ	ｵゐ ゑれゟｵゟｵ	ｵゐ ゑれゟｵｵｵ
Y9Ð!☞[!/Y	ｵｶゔｶゟゐゐｵ	!⊡[Y	D/t	t[w	a⊡	ミ	ｷ				ﾓ				ゟｵ			t[!bb95 h.{h[9{/9b/9	{99 ｵｶゔｶゟゐゐｵ	ｵゐ ゑれゟｵゟｵ	ｵゐ ゑれゟｵｵｵ
Y9Ð!☞[!/Y	ｵｶゔｶゟゐゐｴ	!⊡[Y	D/t	t[w	a⊡	ミ	ｷ	ｵ			ﾓ	ﾊ			ゟｵ	ゟｴ	ゟｷ	t[!bb95 h.{h[9{/9b/9	{99 ｵｶゔｶゟゐゐｴ	ｵゐ ゑれゟｵゟｵ	ｵゐ ゑれゟｵｵｵ
Y9Ð!☞[!/Y	ｵｶゔｶゟゐゐｷ	!⊡[Y	D/t	t[w	a⊡		ｷ		∂		ﾓ		ﾆ					t[!bb95 h.{h[9{/9b/9	{99 ｵｶゔｶゟゐゐｷ	ｵゐ ゑれゟｵゟｵ	ｵゐ ゑれゟｵｵｵ
Y9Ð!☞[!/Y	ｵｶゔｶゟゐゐｵ	!⊡[Y	D/t	t[w	a⊡		ｷ		∂		ﾓ							t[!bb95 h.{h[9{/9b/9	{99 ｵｶゔｶゟゐゐｵ	ｵゐ ゑれゟｵゟｵ	ｵゐ ゑれゟｵｵｵ
Y9Ð!☞[!/Y	ｵｶゔｶゟゐゐ∂	!⊡[Y	D/t	t[w	a⊡			ｵ	∂		ﾓ		ﾆ					t[!bb95 h.{h[9{/9b/9	{99 ｵｶゔｶゟゐゐ∂	ｵゐ ゑれゟｵゟｵ	ｵゐ ゑれゟｵｵｵ
Y9Ð!☞[!/Y	ｵｶゔｶゟゐゐゑ	!⊡[Y	D/t	t[w	a⊡				∂			ﾊ			ゟｵ	ゟｴ	ゟｷ	t[!bb95 h.{h[9{/9b/9	{99 ｵｶゔｶゟゐゐゑ	ｵゐ ゑれゟｵゟｵ	ｵゐ ゑれゟｵｵｵ
Y9Ð/☞5!wY DW!E	ｵｶゔｶゟゐゐﾓ	/⊡5D	D/t	t[w	a⊡			ｵ	∂									t[!bb95 h.{h[9{/9b/9	{99 ｵｶゔｶゟゐゐﾓ	ｵゐ ゑれゟｵゟｵ	ｵゐ ゑれゟｵｵｵ
Y9Ð!☞[!/Y	ｵｶゔｶゟゐゐﾊ	!⊡[Y	D/t	t[w	a⊡	ミ	ｷ	ｵ			ﾓ		ﾆ			ゟｴ	ゟｷ	t[!bb95 h.{h[9{/9b/9	{99 ｵｶゔｶゟゐゐﾊ	ｵゐ ゑれゟｵゟｵ	ｵゐ ゑれゟｵｵｵ
Y9Ð!☞[!/Y	ｵｶゔｶゟゐゐﾆ	!⊡[Y	D/t	t[w	a⊡					ゑ	ﾓ	ﾊ	ﾆ		ゟｵ			t[!bb95 h.{h[9{/9b/9	{99 ｵｶゔｶゟゐゐﾆ	ｵゐ ゑれゟｵゟｵ	ｵゐ ゑれゟｵｵｵ
Y9Ð.☞[LDI¤DW!E	ｵｶゔｶゟゐゐ	.⊞D	D/t	t[w	a⊡							ﾊ			ゟｵ	ゟｴ	ゟｷ	t[!bb95 h.{h[9{/9b/9	{99 ｵｶゔｶゟゐゐ	ｵゐ ゑれゟｵゟｵ	ｵゐ ゑれゟｵｵｵ
Y9Ð!☞[!/Y	ｵｶゔｶゟゑｵ	!⊡[Y	D/t	t[w	a⊡		ｷ	ｵ		ゑ	ﾓ	ﾊ	ﾆ		ゟｵ	ゟｴ	ゟｷ	t[!bb95 h.{h[9{/9b/9	{99 ｵｶゔｶゟゑｵ	ｵゐ ゑれゟｵゟｵ	ｵゐ ゑれゟｵｵｵ
Y9Ð!☞[!/Y	ｵｶゔｶゟゑｴ	!⊡[Y	D/t	t[w	a⊡					ゑ	ﾓ	ﾊ	ﾆ					t[!bb95 h.{h[9{/9b/9	{99 ｵｶゔｶゟゑｴ	ｵゐ ゑれゟｵゟｵ	ｵゐ ゑれゟｵｵｵ
Y9Ð!☞[!/Y	ｵｶゔｶゟゑｷ	!⊡[Y	D/t	t[w	a⊡			ｵ	∂				ﾆ		ゟｵ	ゟｴ	ゟｷ	t[!bb95 h.{h[9{/9b/9	{99 ｵｶゔｶゟゑｷ	ｵゐ ゑれゟｵゟｵ	ｵゐ ゑれゟｵｵｵ
Y9Ð!☞[!/Y	ｵｶゔｶゟゑｵ	!⊡[Y	D/t	t[w	a⊡	ミ	ｷ	ｵ	∂				ﾆ		ゟｵ	ゟｴ	ゟｷ	t[!bb95 h.{h[9{/9b/9	{99 ｵｶゔｶゟゑｵ	ｵゐ ゑれゟｵゟｵ	ｵゐ ゑれゟｵｵｵ
Y9Ð!☞[!/Y	ｵｶゔｶゟゑ∂	!⊡[Y	D/t	t[w	a⊡	ミ		ｵ	∂			ﾊ	ﾆ				ゟｷ	t[!bb95 h.{h[9{/9b/9	{99 ｵｶゔｶゟゑ∂	ｵゐ ゑれゟｵゟｵ	ｵゐ ゑれゟｵｵｵ
Y9Ð!☞[!/Y	ｵｶゔｶゟゑゑ	!⊡[Y	D/t	t[w	a⊡	ミ			∂			ﾊ	ﾆ				ゟｷ	t[!bb95 h.{h[9{/9b/9	{99 ｵｶゔｶゟゑゑ	ｵゐ ゑれゟｵゟｵ	ｵゐ ゑれゟｵｵｵ
Y9Ð!☞[!/Y	ｵｶゔｶゟゑﾓ	!⊡[Y	D/t	t[w	a⊡	ミ	ｷ		∂	ゑ	ﾓ					ゟｴ		t[!bb95 h.{h[9{/9b/9	{99 ｵｶゔｶゟゑﾓ	ｵゐ ゑれゟｵゟｵ	ｵゐ ゑれゟｵｵｵ
Y9Ð!☞[!/Y	ｵｶゔｶゟゑﾊ	!⊡[Y	D/t	t[w	a⊡		ｷ		∂	ゑ	ﾓ	ﾊ					ゟｷ	t[!bb95 h.{h[9{/9b/9	{99 ｵｶゔｶゟゑﾊ	ｵゐ ゑれゟｵゟｵ	ｵゐ ゑれゟｵｵｵ
Y9Ð!☞[!/Y	ｵｶゔｶゟゑﾆ	!⊡[Y	D/t	t[w	a⊡		ｷ				ﾓ						ゟｷ	t[!bb95 h.{h[9{/9b/9	{99 ｵｶゔｶゟゑﾆ	ｵゐ ゑれゟｵゟｵ	ｵゐ ゑれゟｵｵｵ
Y9Ð!☞[!/Y	ｵｶゔｶゟゑ	!⊡[Y	D/t	t[w	a⊡			ｵ				ﾊ	ﾆ					t[!bb95 h.{h[9{/9b/9	{99 ｵｶゔｶゟゑ	ｵゐ ゑれゟｵゟｵ	ｵゐ ゑれゟｵｵｵ
Y9Ð!☞[!/Y	ｵｶゔｶゟをｵ	!⊡[Y	D/t	t[w	a⊡	ミ						ﾊ	ﾆ				ゟｷ	t[!bb95 h.{h[9{/9b/9	{99 ｵｶゔｶゟをｵ	ｵゐ ゑれゟｵゟｵ	ｵゐ ゑれゟｵｵｵ
Y9Ð!☞[!/Y	ｵｶゔｶゟをﾐ	!⊡[Y	D/t	t[w	a⊡		ｷ			ゑ	ﾓ	ﾊ	ﾆ			ゟｴ		t[!bb95 h.{h[9{/9b/9	{99 ｵｶゔｶゟをﾐ	ｵゐ ゑれゟｵゟｵ	ｵゐ ゑれゟｵｵｵ
Y9Ð!☞[!/Y	ｵｶゔｶゟをｷ	!⊡[Y	D/t	t[w	a⊡		ｷ	ｵ		ゑ	ﾓ	ﾊ	ﾆ			ゟｴ		t[!bb95 h.{h[9{/9b/9	{99 ｵｶゔｶゟをｷ	ｵゐ ゑれゟｵゟｵ	ｵゐ ゑれゟｵｵｵ
Y9Ð!☞[!/Y	ｵｶゔｶゟをｵ	!⊡[Y	D/t	t[w	a⊡	ミ	ｷ		∂	ゑ	ﾓ	ﾊ				ゟｴ	ゟｷ	t[!bb95 h.{h[9{/9b/9	{99 ｵｶゔｶゟをｵ	ｵゐ ゑれゟｵゟｵ	ｵゐ ゑれゟｵｵｵ
Y9Ð!☞[!/Y	ｵｶゔｶゟを∂	!⊡[Y	D/t	t[w	a⊡	ミ	ｷ		∂	ゑ	ﾓ	ﾊ	ﾆ		ゟｵ	ゟｴ	ゟｷ	t[!bb95 h.{h[9{/9b/9	{99 ｵｶゔｶゟを∂	ｵゐ ゑれゟｵゟｵ	ｵゐ ゑれゟｵｵｵ
Y9Ð!☞[!/Y	ｵｶゔｶゟをゑ	!⊡[Y	D/t	t[w	a⊡	ミ	ｷ	ｵ	∂	ゑ	ﾓ	ﾊ				ゟｴ	ゟｷ	t[!bb95 h.{h[9{/9b/9	{99 ｵｶゔｶゟをゑ	ｵゐ ゑれゟｵゟｵ	ｵゐ ゑれゟｵｵｵ
Y9Ð!☞[!/Y	ｵｶゔｶゟをﾓ	!⊡[Y	D/t	t[w	a⊡												ゟｷ	t[!bb95 h.{h[9{/9b/9	{99 ｵｶゔｶゟをﾓ	ｵゐ ゑれゟｵゟｵ	ｵゐ ゑれゟｵｵｵ
Y9Ð!☞[!/Y	ｵｶゔｶゟをﾊ	!⊡[Y	D/t	t[w	a⊡		ｷ	ｵ	∂									t[!bb95 h.{h[9{/9b/9	{99 ｵｶゔｶゟをﾊ	ｵゐ ゑれゟｵゟｵ	ｵゐ ゑれゟｵｵｵ

a A3ゑれゎEを [! 5 9 {9! [95 ! {{Ða ! ¤{9! [
. ha ! b5 t Lb h- ¤{I 99¤

! {{9a . [Ð 5 9{/ wLt ¤Lh b	! {{9a . [Ð t! w¤ b- a . 9w	/ ha t hb9b¤ ¤I 9 t w9{9b/ 9 h C! b ! . . w9¹ L! ¤Lh b Lb5 L/ ! ¤9{ ¤I 9 t w9{9b/ 9 h C¤I ! ¤ / ha t hb9b¤ — I h- {LbD Y9Ð⚓h[hw	Dwha a 9¤ /! t	t[w	a ! ¤{9! [	. [h/ Y95 ¤9wa Lb! [{ — /! ¹ L¤Ð° L¤I ! b- a . 9wLb5 L/ ! ¤9{ . [h/ Y95 ¤9wa Lb! [t h{L¤Lh b / /! ¹ L¤Ð° L¤I h- ¤! b- a . 9wLb5 L/ ! ¤9{ ht 9b ¤9wa Lb! [t h{L¤Lh b — ろ	ゎ	わ	ゐ	ゑ	を	ん	ゔ	゛	3れ	33	3ゎ	{¤! ¤- {	/ ha a 9b¤{	ht ¤Lh b! [! ¤¤! ¤/ I a 9b¤{ {h[5 {9t 9w! ¤9[Ð — . ! / Y{I 9[[° L¤I wL {	. ! / Y{I 9[[° L¤I h- ¤ wL {
Y9Ð! ☞[! /Y	[illegible]	! ⊡[Y	D/t	t[w	a ⊠				ﾃ	ﾇ			ﾆ		3ｵ	3ｴ	3ｷ	t[! bb95 h. {h[9{/9b/9	{99 [illegible]	わゐ ゑれ3ゐ3ｵ	わゐ ゑれ3ゐわｵ
Y9Ð! ☞[! /Y	[illegible]	! ⊡[Y	D/t	t[w	a ⊠	ﾐ									3ｵ			t[! bb95 h. {h[9{/9b/9	{99 [illegible]	わゐ ゑれ3ゐ3ｵ	わゐ ゑれ3ゐわｵ
Y9Ð! ☞[! /Y	[illegible]	! ⊡[Y	D/t	t[w	a ⊠							ﾄ	ﾆ				3ｷ	t[! bb95 h. {h[9{/9b/9	{99 [illegible]	わゐ ゑれ3ゐ3ｵ	わゐ ゑれ3ゐわｵ
Y9Ð/☞5! wY DwΣ	[illegible]	/ ⊡5D	D/t	t[w	a ⊠			ｵ	ﾃ				ﾆ					t[! bb95 h. {h[9{/9b/9	{99 [illegible]	わゐ ゑれ3ゐ3ｵ	わゐ ゑれ3ゐわｵ
Y9Ð! ☞[! /Y	[illegible]	! ⊡[Y	D/t	t[w	a ⊠	ﾐ	ｷ					ﾄ	ﾆ		3ｵ	3ｴ	3ｷ	t[! bb95 h. {h[9{/9b/9	{99 [illegible]	わゐ ゑれ3ゐ3ｵ	わゐ ゑれ3ゐわｵ
Y9Ð! ☞[! /Y	[illegible]	! ⊡[Y	D/t	t[w	a ⊠					ﾇ		ﾄ	ﾆ			3ｴ		t[! bb95 h. {h[9{/9b/9	{99 [illegible]	わゐ ゑれ3ゐ3ｵ	わゐ ゑれ3ゐわｵ
Y9Ð! ☞[! /Y	[illegible]	! ⊡[Y	D/t	t[w	a ⊠	ﾐ	ｷ			ﾇ					3ｵ		3ｷ	t[! bb95 h. {h[9{/9b/9	{99 [illegible]	わゐ ゑれ3ゐ3ｵ	わゐ ゑれ3ゐわｵ
Y9Ð! ☞[! /Y	[illegible]	! ⊡[Y	D/t	t[w	a ⊠					ﾇ								t[! bb95 h. {h[9{/9b/9	{99 [illegible]	わゐ ゑれ3ゐ3ｵ	わゐ ゑれ3ゐわｵ
Y9Ð! ☞[! /Y	[illegible]	! ⊡[Y	D/t	t[w	a ⊠			ｵ	ﾃ	ﾇ								t[! bb95 h. {h[9{/9b/9	{99 [illegible]	わゐ ゑれ3ゐ3ｵ	わゐ ゑれ3ゐわｵ
Y9Ð! ☞[! /Y	[illegible]	! ⊡[Y	D/t	t[w	a ⊠	ﾐ	ｷ			ﾇ					3ｵ	3ｴ	3ｷ	t[! bb95 h. {h[9{/9b/9	{99 [illegible]	わゐ ゑれ3ゐ3ｵ	わゐ ゑれ3ゐわｵ
Y9Ð! ☞[! /Y	[illegible]	! ⊡[Y	D/t	t[w	a ⊠					ﾇ						3ｴ		t[! bb95 h. {h[9{/9b/9	{99 [illegible]	わゐ ゑれ3ゐ3ｵ	わゐ ゑれ3ゐわｵ
Y9Ð! ☞[! /Y	[illegible]	! ⊡[Y	D/t	t[w	a ⊠	ﾐ							ﾆ			3ｴ		t[! bb95 h. {h[9{/9b/9	{99 [illegible]	わゐ ゑれ3ゐ3ｵ	わゐ ゑれ3ゐわｵ
Y9Ð! ☞[! /Y	[illegible]	! ⊡[Y	D/t	t[w	a ⊠	ﾐ			ﾃ	ﾇ	ﾓ	ﾄ						t[! bb95 h. {h[9{/9b/9	{99 [illegible]	わゐ ゑれ3ゐ3ｵ	わゐ ゑれ3ゐわｵ
Y9Ð! ☞[! /Y	[illegible]	! ⊡[Y	D/t	t[w	a ⊠	ﾐ			ﾃ	ﾇ	ﾓ	ﾄ	ﾆ			3ｴ		t[! bb95 h. {h[9{/9b/9	{99 [illegible]	わゐ ゑれ3ゐ3ｵ	わゐ ゑれ3ゐわｵ
Y9Ð! ☞[! /Y	[illegible]	! ⊡[Y	D/t	t[w	a ⊠	ﾐ	ｷ	ｵ	ﾃ	ﾇ	ﾓ	ﾄ	ﾆ			3ｴ		t[! bb95 h. {h[9{/9b/9	{99 [illegible]	わゐ ゑれ3ゐ3ｵ	わゐ ゑれ3ゐわｵ
Y9Ð. ☞[ÐI ¤ DwΣ	[illegible]	. ⊞D	D/t	t[w	a ⊠	ﾐ					ﾓ	ﾄ			3ｵ	3ｴ	3ｷ	t[! bb95 h. {h[9{/9b/9	{99 [illegible]	わゐ ゑれ3ゐ3ｵ	わゐ ゑれ3ゐわｵ
Y9Ð. ☞[ÐI ¤ DwΣ	[illegible]	. ⊞D	D/t	t[w	a ⊠	ﾐ					ﾓ	ﾄ	ﾆ		3ｵ	3ｴ	3ｷ	t[! bb95 h. {h[9{/9b/9	{99 [illegible]	わゐ ゑれ3ゐ3ｵ	わゐ ゑれ3ゐわｵ
Y9Ð. ☞[ÐI ¤ DwΣ	[illegible]	. ⊞D	D/t	t[w	a ⊠	ﾐ				ﾇ	ﾓ	ﾄ	ﾆ		3ｵ	3ｴ	3ｷ	t[! bb95 h. {h[9{/9b/9	{99 [illegible]	わゐ ゑれ3ゐ3ｵ	わゐ ゑれ3ゐわｵ
Y9Ð! ☞[! /Y	[illegible]	! ⊡[Y	D/t	t[w	a ⊠	ﾐ	ｷ			ﾇ		ﾄ	ﾆ		3ｵ	3ｴ	3ｷ	t[! bb95 h. {h[9{/9b/9	{99 [illegible]	わゐ ゑれ3ゐ3ｵ	わゐ ゑれ3ゐわｵ
Y9Ð! ☞[! /Y	[illegible]	! ⊡[Y	D/t	t[w	a ⊠							ﾄ				3ｴ	3ｷ	t[! bb95 h. {h[9{/9b/9	{99 [illegible]	わゐ ゑれ3ゐ3ｵ	わゐ ゑれ3ゐわｵ
Y9Ð! ☞[! /Y	[illegible]	! ⊡[Y	D/t	t[w	a ⊠	ﾐ	ｷ	ｵ	ﾃ	ﾇ	ﾓ	ﾄ	ﾆ			3ｴ	3ｷ	t[! bb95 h. {h[9{/9b/9	{99 [illegible]	わゐ ゑれ3ゐ3ｵ	わゐ ゑれ3ゐわｵ
Y9Ð! ☞[! /Y	[illegible]	! ⊡[Y	D/t	t[w	a ⊠			ｵ				ﾄ	ﾆ			3ｴ	3ｷ	t[! bb95 h. {h[9{/9b/9	{99 [illegible]	わゐ ゑれ3ゐ3ｵ	わゐ ゑれ3ゐわｵ
Y9Ð! ☞[! /Y	[illegible]	! ⊡[Y	D/t	t[w	a ⊠	ﾐ	ｷ	ｵ	ﾃ							3ｴ	3ｷ	t[! bb95 h. {h[9{/9b/9	{99 [illegible]	わゐ ゑれ3ゐ3ｵ	わゐ ゑれ3ゐわｵ
Y9Ð! ☞[! /Y	[illegible]	! ⊡[Y	D/t	t[w	a ⊠	ﾐ		ｵ		ﾇ		ﾄ						t[! bb95 h. {h[9{/9b/9	{99 [illegible]	わゐ ゑれ3ゐ3ｵ	わゐ ゑれ3ゐわｵ
Y9Ð! ☞[! /Y	[illegible]	! ⊡[Y	D/t	t[w	a ⊠		ｷ				ﾓ	ﾄ	ﾆ					t[! bb95 h. {h[9{/9b/9	{99 [illegible]	わゐ ゑれ3ゐ3ｵ	わゐ ゑれ3ゐわｵ
Y9Ð! ☞[! /Y	[illegible]	! ⊡[Y	D/t	t[w	a ⊠					ﾇ		ﾄ			3ｵ	3ｴ	3ｷ	t[! bb95 h. {h[9{/9b/9	{99 [illegible]	わゐ ゑれ3ゐ3ｵ	わゐ ゑれ3ゐわｵ
Y9Ð! ☞[! /Y	[illegible]	! ⊡[Y	D/t	t[w	a ⊠					ﾇ					3ｵ	3ｴ		t[! bb95 h. {h[9{/9b/9	{99 [illegible]	わゐ ゑれ3ゐ3ｵ	わゐ ゑれ3ゐわｵ
Y9Ð! ☞[! /Y	[illegible]	! ⊡[Y	D/t	t[w	a ⊠	ﾐ	ｷ	ｵ	ﾃ	ﾇ	ﾓ		ﾆ		3ｵ	3ｴ		t[! bb95 h. {h[9{/9b/9	{99 [illegible]	わゐ ゑれ3ゐ3ｵ	わゐ ゑれ3ゐわｵ
Y9Ð! ☞[! /Y	[illegible]	! ⊡[Y	D/t	t[w	a ⊠	ﾐ	ｷ	ｵ	ﾃ		ﾓ	ﾄ	ﾆ				3ｷ	t[! bb95 h. {h[9{/9b/9	{99 [illegible]	わゐ ゑれ3ゐ3ｵ	わゐ ゑれ3ゐわｵ
Y9Ð! ☞[! /Y	[illegible]	! ⊡[Y	D/t	t[w	a ⊠							ﾄ					3ｷ	t[! bb95 h. {h[9{/9b/9	{99 [illegible]	わゐ ゑれ3ゐ3ｵ	わゐ ゑれ3ゐわｵ
Y9Ð! ☞[! /Y	[illegible]	! ⊡[Y	D/t	t[w	a ⊠	ﾐ	ｷ		ﾃ	ﾇ	ﾓ	ﾄ	ﾆ				3ｷ	t[! bb95 h. {h[9{/9b/9	{99 [illegible]	わゐ ゑれ3ゐ3ｵ	わゐ ゑれ3ゐわｵ
Y9Ð! ☞[! /Y	[illegible]	! ⊡[Y	D/t	t[w	a ⊠			ｵ							3ｵ	3ｴ		t[! bb95 h. {h[9{/9b/9	{99 [illegible]	わゐ ゑれ3ゐ3ｵ	わゐ ゑれ3ゐわｵ
Y9Ð! ☞[! /Y	[illegible]	! ⊡[Y	D/t	t[w	a ⊠		ｷ			ﾇ		ﾄ			3ｵ			t[! bb95 h. {h[9{/9b/9	{99 [illegible]	わゐ ゑれ3ゐ3ｵ	わゐ ゑれ3ゐわｵ
Y9Ð! ☞[! /Y	[illegible]	! ⊡[Y	D/t	t[w	a ⊠				ﾃ			ﾄ						t[! bb95 h. {h[9{/9b/9	{99 [illegible]	わゐ ゑれ3ゐ3ｵ	わゐ ゑれ3ゐわｵ
Y9Ð! ☞[! /Y	[illegible]	! ⊡[Y	D/t	t[w	a ⊠				ﾃ		ﾓ	ﾄ						t[! bb95 h. {h[9{/9b/9	{99 [illegible]	わゐ ゑれ3ゐ3ｵ	わゐ ゑれ3ゐわｵ
Y9Ð! ☞[! /Y	[illegible]	! ⊡[Y	D/t	t[w	a ⊠						ﾓ	ﾄ	ﾆ					t[! bb95 h. {h[9{/9b/9	{99 [illegible]	わゐ ゑれ3ゐ3ｵ	わゐ ゑれ3ゐわｵ
Y9Ð! ☞[! /Y	[illegible]	! ⊡[Y	D/t	t[w	a ⊠		ｷ	ｵ	ﾃ	ﾇ	ﾓ		ﾆ		3ｵ	3ｴ	3ｷ	t[! bb95 h. {h[9{/9b/9	{99 [illegible]	わゐ ゑれ3ゐ3ｵ	わゐ ゑれ3ゐわｵ
Y9Ð. ☞[ÐI ¤ DwΣ	[illegible]	. ⊞D	D/t	t[w	a ⊠					ﾇ			ﾆ		3ｵ	3ｴ	3ｷ	t[! bb95 h. {h[9{/9b/9	{99 [illegible]	わゐ ゑれ3ゐ3ｵ	わゐ ゑれ3ゐわｵ
Y9Ð! ☞[! /Y	[illegible]	! ⊡[Y	D/t	t[w	a ⊠								ﾆ				3ｷ	t[! bb95 h. {h[9{/9b/9	{99 [illegible]	わゐ ゑれ3ゐ3ｵ	わゐ ゑれ3ゐわｵ
Y9Ð! ☞[! /Y	[illegible]	! ⊡[Y	D/t	t[w	a ⊠	ﾐ	ｷ		ﾃ	ﾇ	ﾓ		ﾆ					t[! bb95 h. {h[9{/9b/9	{99 [illegible]	わゐ ゑれ3ゐ3ｵ	わゐ ゑれ3ゐわｵ
Y9Ð! ☞[! /Y	[illegible]	! ⊡[Y	D/t	t[w	a ⊡													{! [9! . [9		わゐ ゑれ3ゐ3ｵ	わゐ ゑれ3ゐわｵ
Y9Ð. ☞[ÐI ¤ DwΣ	[illegible]	. ⊞D	D/t	t[w	a ⊡													{! [9! . [9		わゐ ゑれ3ゐ3ｵ	わゐ ゑれ3ゐわｵ
Y9Ð/☞wh° b	[illegible]	/ ⊡w	D/t	t[w	a ⊡													bh¤w9/ha a 9b595	{99 [illegible]	わゐ ゑれ3ゐ3ｵ	わゐ ゑれ3ゐわｵ
Y9Ð5☞Dw99b	[illegible]	5 ⊞w	D/t	t[w	a ⊡													bh¤w9/ha a 9b595	{99 [illegible]	わゐ ゑれ3ゐ3ｵ	わゐ ゑれ3ゐわｵ
¹ hl5 Y9Σ	[illegible]																				
Y9Ð! ☞[! /Y	[illegible]	! ⊡[Y	D/t	t[w	a ⊡						ﾓ							{! [9! . [9		わゐ ゑれ3ゐ3ｵ	わゐ ゑれ3ゐわｵ
Y9Ð. ☞[ÐI ¤ DwΣ	[illegible]	. ⊞D	D/t	t[w	a ⊡						ﾓ							{! [9! . [9		わゐ ゑれ3ゐ3ｵ	わゐ ゑれ3ゐわｵ
Y9Ð/☞wh° b	[illegible]	/ ⊡w	D/t	t[w	a ⊡						ﾓ							bh¤w9/ha a 9b595		わゐ ゑれ3ゐ3ｵ	わゐ ゑれ3ゐわｵ
Y9Ð5☞Dw99b	[illegible]	5 ⊞w	D/t	t[w	a ⊡						ﾓ							bh¤w9/ha a 9b595		わゐ ゑれ3ゐ3ｵ	わゐ ゑれ3ゐわｵ
¹ hl5 Y9Σ	[illegible]																				
Y9Ð! ☞[! /Y	[illegible]	! ⊡[Y	D/t	t[w	a ⊡						ﾓ	ﾄ						{! [9! . [9		わゐ ゑれ3ゐ3ｵ	わゐ ゑれ3ゐわｵ
Y9Ð. ☞[ÐI ¤ DwΣ	[illegible]	. ⊞D	D/t	t[w	a ⊡						ﾓ	ﾄ						{! [9! . [9		わゐ ゑれ3ゐ3ｵ	わゐ ゑれ3ゐわｵ
Y9Ð/☞wh° b	[illegible]	/ ⊡w	D/t	t[w	a ⊡						ﾓ	ﾄ						bh¤w9/ha a 9b595		わゐ ゑれ3ゐ3ｵ	わゐ ゑれ3ゐわｵ
Y9Ð5☞Dw99b	[illegible]	5 ⊞w	D/t	t[w	a ⊡						ﾓ	ﾄ						bh¤w9/ha a 9b595		わゐ ゑれ3ゐ3ｵ	わゐ ゑれ3ゐわｵ
¹ hl5 Y9Σ	[illegible]																				
Y9Ð! ☞[! /Y	[illegible]	! ⊡[Y	D/t	t[w	a ⊡	ﾐ					ﾓ	ﾄ						{! [9! . [9		わゐ ゑれ3ゐ3ｵ	わゐ ゑれ3ゐわｵ
Y9Ð. ☞[ÐI ¤ DwΣ	[illegible]	. ⊞D	D/t	t[w	a ⊡	ﾐ					ﾓ	ﾄ						{! [9! . [9		わゐ ゑれ3ゐ3ｵ	わゐ ゑれ3ゐわｵ
Y9Ð/☞wh° b	[illegible]	/ ⊡w	D/t	t[w	a ⊡	ﾐ					ﾓ	ﾄ						bh¤w9/ha a 9b595	{99 [illegible]	わゐ ゑれ3ゐ3ｵ	わゐ ゑれ3ゐわｵ
Y9Ð5☞Dw99b	[illegible]	5 ⊞w	D/t	t[w	a ⊡	ﾐ					ﾓ	ﾄ						bh¤w9/ha a 9b595	{99 [illegible]	わゐ ゑれ3ゐ3ｵ	わゐ ゑれ3ゐわｵ
¹ hl5 Y9Σ	[illegible]																				
Y9Ð! ☞[! /Y	[illegible]	! ⊡[Y	D/t	t[w	a ⊡	ﾐ					ﾓ	ﾄ					3ｷ	{! [9! . [9		わゐ ゑれ3ゐ3ｵ	わゐ ゑれ3ゐわｵ
Y9Ð. ☞[ÐI ¤ DwΣ	[illegible]	. ⊞D	D/t	t[w	a ⊡	ﾐ					ﾓ	ﾄ					3ｷ	{! [9! . [9		わゐ ゑれ3ゐ3ｵ	わゐ ゑれ3ゐわｵ
Y9Ð/☞wh° b	[illegible]	/ ⊡w	D/t	t[w	a ⊡	ﾐ					ﾓ	ﾄ					3ｷ	bh¤w9/ha a 9b595		わゐ ゑれ3ゐ3ｵ	わゐ ゑれ3ゐわｵ
Y9Ð5☞Dw99b	[illegible]	5 ⊞w	D/t	t[w	a ⊡	ﾐ					ﾓ	ﾄ					3ｷ	bh¤w9/ha a 9b595		わゐ ゑれ3ゐ3ｵ	わゐ ゑれ3ゐわｵ
¹ hl5 Y9Σ	[illegible]																				
Y9Ð! ☞[! /Y	[illegible]	! ⊡[Y	D/t	t[w	a ⊡						ﾓ						3ｷ	{! [9! . [9		わゐ ゑれ3ゐ3ｵ	わゐ ゑれ3ゐわｵ
Y9Ð! ☞[! /Y	[illegible]	! ⊡[Y	D/t	t[w	a ⊡	ﾐ	ｷ	ｵ	ﾃ	ﾇ	ﾓ	ﾄ	ﾆ		3ｵ	3ｴ	3ｷ	{! [9! . [9		わゐ ゑれ3ゐ3ｵ	わゐ ゑれ3ゐわｵ
Y9Ð. ☞[ÐI ¤ DwΣ	[illegible]	. ⊞D	D/t	t[w	a ⊡	ﾐ	ｷ	ｵ	ﾃ	ﾇ	ﾓ	ﾄ	ﾆ		3ｵ	3ｴ	3ｷ	{! [9! . [9		わゐ ゑれ3ゐ3ｵ	わゐ ゑれ3ゐわｵ
Y9Ð/☞wh° b	[illegible]	/ ⊡w	D/t	t[w	a ⊡	ﾐ	ｷ	ｵ	ﾃ	ﾇ	ﾓ	ﾄ	ﾆ		3ｵ	3ｴ	3ｷ	bh¤w9/ha a 9b595	{99 [illegible]	わゐ ゑれ3ゐ3ｵ	わゐ ゑれ3ゐわｵ
Y9Ð5☞Dw99b	[illegible]	5 ⊞w	D/t	t[w	a ⊡	ﾐ	ｷ	ｵ	ﾃ	ﾇ	ﾓ	ﾄ	ﾆ		3ｵ	3ｴ	3ｷ	bh¤w9/ha a 9b595	{99 [illegible]	わゐ ゑれ3ゐ3ｵ	わゐ ゑれ3ゐわｵ
¹ hl5 Y9Σ	[illegible]																				
Y9Ð! ☞[! /Y	[illegible]	! ⊡[Y	D/t	t[w	a ⊡		ｷ	ｵ					ﾆ			3ｴ		{! [9! . [9		わゐ ゑれ3ゐ3ｵ	わゐ ゑれ3ゐわｵ
Y9Ð! ☞[! /Y	[illegible]	! ⊡[Y	D/t	t[w	a ⊡		ｷ	ｵ		ﾇ	ﾓ	ﾄ	ﾆ			3ｴ		{! [9! . [9		わゐ ゑれ3ゐ3ｵ	わゐ ゑれ3ゐわｵ

molex

a ʎEろ気れわEを [! 5 9{9! [95 ! {{Ða ! ¤{9! [
. ha ! b5 t Lb h- ¤{I 99¤

! {{9a . [Ð5 9{/ wLt ¤Lhb	! {{9a . [Ð t ! w¤ b- a . 9w	/ ha thb9b¤				. [h/ Y95 ¤9wa Lb! [{												{¤! ¤- {	/ ha a 9b¤{	ht ¤Lhb! [! ¤¤! ¤/I a 9b¤{ {h[5 {9t 9W! ¤9[Ð	
		¤I 9 t w9{9b/ 9 hC! b ! . . w9¹ L! ¤Lhb Lb5L/! ¤9{ ¤I 9 t w9{9b/ 9 hC¤I ! ¤ / ha thb9b¤♔				/ ! ¹ L¤Ð° L¤I ! b- a . 9wLb5L/! ¤9{ . [h/ Y95 ¤9wa Lb! [t h{L¤Lhb / ! ¹ L¤Ð° L¤I h- ¤! b- a . 9wLb5L/! ¤9{ ht 9b ¤9wa Lb! [t h{L¤Lhb															
		I h- {LbD Y9Ð☝h[hw	Dwha a 9¤ / ! t	t [w	a ! ¤{9! [	ろ	ゎ	わ	ゐ	ゑ	を	ん	ゔ	゛	ろれ	ろろ	ろゎ			. ! / Y{I 9[[° L¤I wL {	. ! / Y{I 9[[° L¤I h- ¤ wL {
Y9Ð! ☞[! / Y	わわぷう⊡あわわ	! ⊡[Y	D/ t	t [w	a ⊡						そ	ｶ						{! [9! . [9		わあ 気1ろわろ	わあ 気1ろわわ
Y9Ð! ☞[! / Y	わわぷう⊡あわわ	! ⊡[Y	D/ t	t [w	a ⊡		ｫ	ｵ			そ	ｶ	ニ		ろｲ	ろｴ		{! [9! . [9		わあ 気1ろわろ	わあ 気1ろわわ
Y9Ð. ☞[ÐI ¤ DW! £	わわぷう⊡あわわ	. ⊡D	D/ t	t [w	a ⊡	ミ				ゑ	そ	ｶ	ニ		ろｲ			{! [9! . [9		わあ 気1ろわろ	わあ 気1ろわわ
Y9Ð! ☞[! / Y	わわぷう⊡あわわ	! ⊡[Y	D/ t	t [w	a ⊡		ｫ											{! [9! . [9		わあ 気1ろわろ	わあ 気1ろわわ
Y9Ð. ☞[ÐI ¤ DW! £	わわぷう⊡あわわ	. ⊡D	D/ t	t [w	a ⊡		ｫ								ろｲ			{! [9! . [9		わあ 気1ろわろ	わあ 気1ろわわ
Y9Ð! ☞[! / Y	わわぷう⊡あわわ	! ⊡[Y	D/ t	t [w	a ⊡	ミ				ゑ	そ	ｶ	ニ					{! [9! . [9		わあ 気1ろわろ	わあ 気1ろわわ
Y9Ð! ☞[! / Y	わわぷう⊡あわみ	! ⊡[Y	D/ t	t [w	a ⊡		ｫ	ｵ					ニ		ろｲ	ろｴ		{! [9! . [9		わあ 気1ろわろ	わあ 気1ろわわ
Y9Ð! ☞[! / Y	わわぷう⊡あわみ	! ⊡[Y	D/ t	t [w	a ⊡							ｶ	ニ		ろｲ	ろｴ		{! [9! . [9		わあ 気1ろわろ	わあ 気1ろわわ
Y9Ð! ☞[! / Y	わわぷう⊡あわみ	! ⊡[Y	D/ t	t [w	a ⊡							ｶ	ニ					{! [9! . [9		わあ 気1ろわろ	わあ 気1ろわわ
Y9Ð! ☞[! / Y	わわぷう⊡あわみ	! ⊡[Y	D/ t	t [w	a ⊡		ｫ								ろｲ			{! [9! . [9		わあ 気1ろわろ	わあ 気1ろわわ
Y9Ð! ☞[! / Y	わわぷう⊡あわみ	! ⊡[Y	D/ t	t [w	a ⊡		ｫ		∂									{! [9! . [9		わあ 気1ろわろ	わあ 気1ろわわ
Y9Ð! ☞[! / Y	わわぷう⊡あわみ	! ⊡[Y	D/ t	t [w	a ⊡										ろｲ	ろｴ	ろｨ	{! [9! . [9		わあ 気1ろわろ	わあ 気1ろわわ
Y9Ð! ☞[! / Y	わわぷう⊡あわみ	! ⊡[Y	D/ t	t [w	a ⊡											ろｴ		{! [9! . [9		わあ 気1ろわろ	わあ 気1ろわわ
Y9Ð! ☞[! / Y	わわぷう⊡あわみ	! ⊡[Y	D/ t	t [w	a ⊡		ｫ	ｵ	∂			ｶ	ニ					{! [9! . [9		わあ 気1ろわろ	わあ 気1ろわわ
Y9Ð! ☞[! / Y	わわぷう⊡あわみ	! ⊡[Y	D/ t	t [w	a ⊡	ミ		ｵ	∂	ゑ	そ	ｶ	ニ					{! [9! . [9		わあ 気1ろわろ	わあ 気1ろわわ
Y9Ð! ☞[! / Y	わわぷう⊡あわゐ	! ⊡[Y	D/ t	t [w	a ⊡										ろｲ	ろｴ	ろｨ	{! [9! . [9		わあ 気1ろわろ	わあ 気1ろわわ
Y9Ð! ☞[! / Y	わわぷう⊡あわゑ	! ⊡[Y	D/ t	t [w	a ⊡				∂	ゑ	そ	ｶ	ニ					{! [9! . [9		わあ 気1ろわろ	わあ 気1ろわわ
Y9Ð! ☞[! / Y	わわぷう⊡あわゑ	! ⊡[Y	D/ t	t [w	a ⊡		ｫ		∂	ゑ			ニ		ろｲ	ろｴ		{! [9! . [9		わあ 気1ろわろ	わあ 気1ろわわ
Y9Ð! ☞[! / Y	わわぷう⊡あわゑ	! ⊡[Y	D/ t	t [w	a ⊡							ｶ						{! [9! . [9		わあ 気1ろわろ	わあ 気1ろわわ
Y9Ð! ☞[! / Y	わわぷう⊡あわゑ	! ⊡[Y	D/ t	t [w	a ⊡		ｫ	ｵ	∂	ゑ	そ	ｶ	ニ		ろｲ	ろｴ	ろｨ	{! [9! . [9		わあ 気1ろわろ	わあ 気1ろわわ
Y9Ð! ☞[! / Y	わわぷう⊡あわゑ	! ⊡[Y	D/ t	t [w	a ⊡		ｫ	ｵ	∂	ゑ					ろｲ	ろｴ	ろｨ	{! [9! . [9		わあ 気1ろわろ	わあ 気1ろわわ
Y9Ð! ☞[! / Y	わわぷう⊡あわゑ	! ⊡[Y	D/ t	t [w	a ⊡		ｫ	ｵ	∂	ゑ	そ	ｶ			ろｲ	ろｴ	ろｨ	{! [9! . [9		わあ 気1ろわろ	わあ 気1ろわわ
Y9Ð! ☞[! / Y	わわぷう⊡あわゑ	! ⊡[Y	D/ t	t [w	a ⊡	ミ					そ	ｶ						{! [9! . [9		わあ 気1ろわろ	わあ 気1ろわわ
Y9Ð! ☞[! / Y	わわぷう⊡あわゑ	! ⊡[Y	D/ t	t [w	a ⊡										ろｲ		ろｨ	{! [9! . [9		わあ 気1ろわろ	わあ 気1ろわわ
Y9Ð! ☞[! / Y	わわぷう⊡あわゑ	! ⊡[Y	D/ t	t [w	a ⊡		ｫ	ｵ								ろｴ		{! [9! . [9		わあ 気1ろわろ	わあ 気1ろわわ
Y9Ð! ☞[! / Y	わわぷう⊡あわゑ	! ⊡[Y	D/ t	t [w	a ⊡	ミ	ｫ	ｵ	∂	ゑ					ろｲ	ろｴ	ろｨ	{! [9! . [9		わあ 気1ろわろ	わあ 気1ろわわ
Y9Ð! ☞[! / Y	わわぷう⊡あわゑ	! ⊡[Y	D/ t	t [w	a ⊡											ろｴ	ろｨ	{! [9! . [9		わあ 気1ろわろ	わあ 気1ろわわ
Y9Ð/ ☞5! wY DW! £	わわぷう⊡あわを	/ ⊡5D	D/ t	t [w	a ⊡													{! [9! . [9		わあ 気1ろわろ	わあ 気1ろわわ
Y9Ð5☞{¤hb9 DW! £	わわぷう⊡あわを	5 ⊡{D	D/ t	t [w	a ⊡													{! [9! . [9		わあ 気1ろわろ	わあ 気1ろわわ
Y9Ð/ ☞5! wY DW! £	わわぷう⊡あわを	/ ⊡5D	D/ t	t [w	a ⊡	ミ	ｫ	ｵ	∂	ゑ	そ	ｶ	ニ		ろｲ	ろｴ	ろｨ	{! [9! . [9		わあ 気1ろわろ	わあ 気1ろわわ
Y9Ð5☞{¤hb9 DW! £	わわぷう⊡あわを	5 ⊡{D	D/ t	t [w	a ⊡	ミ	ｫ	ｵ	∂	ゑ	そ	ｶ	ニ		ろｲ	ろｴ	ろｨ	{! [9! . [9		わあ 気1ろわろ	わあ 気1ろわわ
Y9Ð! ☞[! / Y	わわぷう⊡あわを	! ⊡[Y	D/ t	t [w	a ⊡						そ	ｶ	ニ		ろｲ	ろｴ		{! [9! . [9		わあ 気1ろわろ	わあ 気1ろわわ
Y9Ð! ☞[! / Y	わわぷう⊡あわを	! ⊡[Y	D/ t	t [w	a ⊡	ミ	ｫ	ｵ	∂	ゑ	そ	ｶ					ろｨ	{! [9! . [9		わあ 気1ろわろ	わあ 気1ろわわ
Y9Ð! ☞[! / Y	わわぷう⊡あわを	! ⊡[Y	D/ t	t [w	a ⊡			ｵ	∂	ゑ	そ	ｶ						{! [9! . [9		わあ 気1ろわろ	わあ 気1ろわわ
Y9Ð! ☞[! / Y	わわぷう⊡あわを	! ⊡[Y	D/ t	t [w	a ⊡			ｵ	∂	ゑ	そ	ｶ	ニ		ろｲ	ろｴ		{! [9! . [9		わあ 気1ろわろ	わあ 気1ろわわ
Y9Ð! ☞[! / Y	わわぷう⊡あわを	! ⊡[Y	D/ t	t [w	a ⊡	ミ	ｫ	ｵ	∂	ゑ			ニ		ろｲ	ろｴ	ろｨ	{! [9! . [9		わあ 気1ろわろ	わあ 気1ろわわ
Y9Ð! ☞[! / Y	わわぷう⊡あわん	! ⊡[Y	D/ t	t [w	a ⊡		ｫ		∂			ｶ	ニ		ろｲ			{! [9! . [9		わあ 気1ろわろ	わあ 気1ろわわ
Y9Ð! ☞[! / Y	わわぷう⊡あわん	! ⊡[Y	D/ t	t [w	a ⊡		ｫ					ｶ	ニ					{! [9! . [9		わあ 気1ろわろ	わあ 気1ろわわ
Y9Ð! ☞[! / Y	わわぷう⊡あわん	! ⊡[Y	D/ t	t [w	a ⊡		ｫ					ｶ	ニ		ろｲ			{! [9! . [9		わあ 気1ろわろ	わあ 気1ろわわ
Y9Ð! ☞[! / Y	わわぷう⊡あわん	! ⊡[Y	D/ t	t [w	a ⊡								ニ					{! [9! . [9		わあ 気1ろわろ	わあ 気1ろわわ
Y9Ð! ☞[! / Y	わわぷう⊡あわん	! ⊡[Y	D/ t	t [w	a ⊡	ミ		ｵ	∂	ゑ	そ		ニ		ろｲ	ろｴ	ろｨ	{! [9! . [9		わあ 気1ろわろ	わあ 気1ろわわ
Y9Ð! ☞[! / Y	わわぷう⊡あわん	! ⊡[Y	D/ t	t [w	a ⊡				∂				ニ		ろｲ			{! [9! . [9		わあ 気1ろわろ	わあ 気1ろわわ
Y9Ð! ☞[! / Y	わわぷう⊡あわん	! ⊡[Y	D/ t	t [w	a ⊡	ミ	ｫ	ｵ	∂		そ		ニ		ろｲ	ろｴ	ろｨ	{! [9! . [9		わあ 気1ろわろ	わあ 気1ろわわ
Y9Ð! ☞[! / Y	わわぷう⊡あわん	! ⊡[Y	D/ t	t [w	a ⊡	ミ	ｫ	ｵ								ろｴ	ろｨ	{! [9! . [9		わあ 気1ろわろ	わあ 気1ろわわ
Y9Ð! ☞[! / Y	わわぷう⊡あわん	! ⊡[Y	D/ t	t [w	a ⊡						そ						ろｨ	{! [9! . [9		わあ 気1ろわろ	わあ 気1ろわわ
Y9Ð! ☞[! / Y	わわぷう⊡あわん	! ⊡[Y	D/ t	t [w	a ⊡	ミ	ｫ	ｵ	∂	ゑ		ｶ	ニ		ろｲ	ろｴ		{! [9! . [9		わあ 気1ろわろ	わあ 気1ろわわ
Y9Ð! ☞[! / Y	わわぷう⊡あわう	! ⊡[Y	D/ t	t [w	a ⊡	ミ	ｫ	ｵ	∂	ゑ	そ							{! [9! . [9		わあ 気1ろわろ	わあ 気1ろわわ
Y9Ð! ☞[! / Y	わわぷう⊡あわう	! ⊡[Y	D/ t	t [w	a ⊡		ｫ		∂		そ		ニ		ろｲ	ろｴ		{! [9! . [9		わあ 気1ろわろ	わあ 気1ろわわ
Y9Ð! ☞[! / Y	わわぷう⊡あわう	! ⊡[Y	D/ t	t [w	a ⊡	ミ	ｫ	ｵ	∂	ゑ	そ				ろｲ	ろｴ	ろｨ	{! [9! . [9		わあ 気1ろわろ	わあ 気1ろわわ
Y9Ð! ☞[! / Y	わわぷう⊡あわう	! ⊡[Y	D/ t	t [w	a ⊡						そ				ろｲ	ろｴ	ろｨ	{! [9! . [9		わあ 気1ろわろ	わあ 気1ろわわ
Y9Ð! ☞[! / Y	わわぷう⊡あわう	! ⊡[Y	D/ t	t [w	a ⊡	ミ		ｵ	∂	ゑ	そ	ｶ	ニ		ろｲ	ろｴ	ろｨ	{! [9! . [9		わあ 気1ろわろ	わあ 気1ろわわ
Y9Ð5☞{¤hb9 DW! £	わわぷう⊡あわう	5 ⊡{D	D/ t	t [w	a ⊡	ミ					そ	ｶ						{! [9! . [9		わあ 気1ろわろ	わあ 気1ろわわ
Y9Ð! ☞[! / Y	わわぷう⊡あわう	! ⊡[Y	D/ t	t [w	a ⊡		ｫ	ｵ					ニ					{! [9! . [9		わあ 気1ろわろ	わあ 気1ろわわ
Y9Ð! ☞[! / Y	わわぷう⊡あわう	! ⊡[Y	D/ t	t [w	a ⊡	ミ						ｶ						{! [9! . [9		わあ 気1ろわろ	わあ 気1ろわわ
Y9Ð! ☞[! / Y	わわぷう⊡あわう	! ⊡[Y	D/ t	t [w	a ⊡	ミ					そ							{! [9! . [9		わあ 気1ろわろ	わあ 気1ろわわ
Y9Ð! ☞[! / Y	わわぷう⊡あわう	! ⊡[Y	D/ t	t [w	a ⊡	ミ	ｫ	ｵ	∂	ゑ	そ		ニ					{! [9! . [9		わあ 気1ろわろ	わあ 気1ろわわ
Y9Ð! ☞[! / Y	わわぷう⊡あわゎ	! ⊡[Y	D/ t	t [w	a ⊡	ミ						ｶ					ろｨ	{! [9! . [9		わあ 気1ろわろ	わあ 気1ろわわ
Y9Ð! ☞[! / Y	わわぷう⊡あわゎ	! ⊡[Y	D/ t	t [w	a ⊡	ミ	ｫ	ｵ	∂	ゑ	そ	ｶ	ニ				ろｨ	{! [9! . [9		わあ 気1ろわろ	わあ 気1ろわわ
Y9Ð! ☞[! / Y	わわぷう⊡あわゎ	! ⊡[Y	D/ t	t [w	a ⊡													{! [9! . [9		わあ 気1ろわろ	わあ 気1ろわわ
Y9Ð! ☞[! / Y	わわぷう⊡あわゎ	! ⊡[Y	D/ t	t [w	a ⊡			ｵ	∂						ろｲ	ろｴ	ろｨ	{! [9! . [9		わあ 気1ろわろ	わあ 気1ろわわ
Y9Ð! ☞[! / Y	わわぷう⊡あわゎ	! ⊡[Y	D/ t	t [w	a ⊡	ミ	ｫ			ゑ	そ	ｶ	ニ					{! [9! . [9		わあ 気1ろわろ	わあ 気1ろわわ
Y9Ð! ☞[! / Y	わわぷう⊡あわゎ	! ⊡[Y	D/ t	t [w	a ⊡	ミ	ｫ			ゑ	そ	ｶ	ニ			ろｴ	ろｨ	{! [9! . [9		わあ 気1ろわろ	わあ 気1ろわわ
Y9Ð! ☞[! / Y	わわぷう⊡あわゎ	! ⊡[Y	D/ t	t [w	a ⊡	ミ	ｫ	ｵ	∂	ゑ	そ	ｶ	ニ		ろｲ			{! [9! . [9		わあ 気1ろわろ	わあ 気1ろわわ
Y9Ð! ☞[! / Y	わわぷう⊡あわゎ	! ⊡[Y	D/ t	t [w	a ⊡				∂		そ				ろｲ	ろｴ	ろｨ	{! [9! . [9		わあ 気1ろわろ	わあ 気1ろわわ
Y9Ð! ☞[! / Y	わわぷう⊡あわゎ	! ⊡[Y	D/ t	t [w	a ⊡						そ					ろｴ	ろｨ	{! [9! . [9		わあ 気1ろわろ	わあ 気1ろわわ
Y9Ð! ☞[! / Y	わわぷう⊡あわゎ	! ⊡[Y	D/ t	t [w	a ⊡	ミ	ｫ					ｶ	ニ					{! [9! . [9		わあ 気1ろわろ	わあ 気1ろわわ
Y9Ð! ☞[! / Y	わわぷう⊡あわれ	! ⊡[Y	D/ t	t [w	a ⊡	ミ	ｫ	ｵ					ニ		ろｲ	ろｴ	ろｨ	{! [9! . [9		わあ 気1ろわろ	わあ 気1ろわわ
Y9Ð! ☞[! / Y	わわぷう⊡あわれ	! ⊡[Y	D/ t	t [w	a ⊡	ミ	ｫ					ｶ	ニ				ろｨ	{! [9! . [9		わあ 気1ろわろ	わあ 気1ろわわ
Y9Ð. ☞[ÐI ¤ DW! £	わわぷう⊡あわれ	. ⊡D	D/ t	t [w	a ⊡										ろｲ	ろｴ		{! [9! . [9		わあ 気1ろわろ	わあ 気1ろわわ
Y9Ð! ☞[! / Y	わわぷう⊡あわれ	! ⊡[Y	D/ t	t [w	a ⊡	ミ	ｫ	ｵ	∂			ｶ	ニ		ろｲ		ろｨ	{! [9! . [9		わあ 気1ろわろ	わあ 気1ろわわ
Y9Ð! ☞[! / Y	わわぷう⊡あわれ	! ⊡[Y	D/ t	t [w	a ⊡	ミ	ｫ	ｵ	∂			ｶ	ニ		ろｲ			{! [9! . [9		わあ 気1ろわろ	わあ 気1ろわわ
Y9Ð. ☞[ÐI ¤ DW! £	わわぷう⊡あわれ	. ⊡D	D/ t	t [w	a ⊡										ろｲ	ろｴ	ろｨ	{! [9! . [9		わあ 気1ろわろ	わあ 気1ろわわ
Y9Ð. ☞[ÐI ¤ DW! £	わわぷう⊡あわれ	. ⊡D	D/ t	t [w	a ⊡	ミ	ｫ	ｵ	∂	ゑ	そ	ｶ			ろｲ	ろｴ	ろｨ	{! [9! . [9		わあ 気1ろわろ	わあ 気1ろわわ

molex

a /E[illegible] [! 59{9! [95 ! {{Ða ! ¤{9! [
. ha ! b5 t Łb h- ¤{I 99¤

! {{9a . [Ð59{/ wŁt ¤Łhb	! {{9a . [Ðt! w¤ b- a . 9w	/ ha t hb9b¤				. [h/ Y95 ¤9wa Łb! [{												{¤! ¤- {	/ ha a 9b¤{	ht ¤Łhb! [! ¤¤! ¤/ I a 9b¤{ {h[5 {9t 9W ¤9[Ð	
		¤I 9 t w9{9b/ 9 h C! b ! . . w9¹ Ł ¤Łhb Łb5Ł/ ! ¤9{ ¤I 9 t w9{9b/ 9 h C¤I ! ¤ / ha t hb9b¤				/ ! ¹ Ł¤Ð° Ł¤I ! b- a . 9wŁb5Ł/ ! ¤9{ . [h/ Y95 ¤9wa Łb! [t h{Ł¤Łhb / ! ¹ Ł¤Ð° Ł¤I h- ¤! b- a . 9wŁb5Ł/ ! ¤9{ ht 9b ¤9wa Łb! [t h{Ł¤Łhb															
		I h- {ŁbD Y9Ð/h[hw	Dwha a 9¤ / ! t	t [w	a ! ¤{9! [	ろ	ゎ	わ	ゐ	ゑ	を	ん	ゔ	゛	ろれ	ろろ	ろゎ			. ! / Y{I 9[[° Ł¤I wŁ {	. ! / Y{I 9[[° Ł¤I h- ¤ wŁ {
Y9Ð! ☞[! / Y	わわろうわろ[illegible]	! ⊡[Y	D/t	t[w	a ⊡	ミ	ォ	オ	∂	ゑ		ﾄ	ﾆ					{! [9! . [9		わゐ ゑれ[illegible]	わゐ ゑれ[illegible]
Y9Ð! ☞[! / Y	わわろうわろ[illegible]	! ⊡[Y	D/t	t[w	a ⊡							ﾄ	ﾆ		ろォ	ろエ	ろォ	{! [9! . [9		わゐ ゑれ[illegible]	わゐ ゑれ[illegible]
Y9Ð! ☞[! / Y	わわろうわろ[illegible]	! ⊡[Y	D/t	t[w	a ⊡	ミ							ﾆ		ろォ	ろエ		{! [9! . [9		わゐ ゑれ[illegible]	わゐ ゑれ[illegible]
Y9Ð! ☞[! / Y	わわろうわろ[illegible]	! ⊡[Y	D/t	t[w	a ⊡	ミ			∂							ろエ		{! [9! . [9		わゐ ゑれ[illegible]	わゐ ゑれ[illegible]
Y9Ð! ☞[! / Y	わわろうわろ[illegible]	! ⊡[Y	D/t	t[w	a ⊡	ミ	ォ		∂	ゑ	を	ﾄ			ろォ	ろエ	ろォ	{! [9! . [9		わゐ ゑれ[illegible]	わゐ ゑれ[illegible]
Y9Ð! ☞[! / Y	わわろうわろ[illegible]	! ⊡[Y	D/t	t[w	a ⊡								ﾆ					{! [9! . [9		わゐ ゑれ[illegible]	わゐ ゑれ[illegible]
Y9Ð! ☞[! / Y	わわろうわろ[illegible]	! ⊡[Y	D/t	t[w	a ⊡			オ	∂	ゑ	を		ﾆ		ろォ	ろエ		{! [9! . [9		わゐ ゑれ[illegible]	わゐ ゑれ[illegible]
Y9Ð! ☞[! / Y	わわろうわろ[illegible]	! ⊡[Y	D/t	t[w	a ⊡			オ			を	ﾄ	ﾆ		ろォ			{! [9! . [9		わゐ ゑれ[illegible]	わゐ ゑれ[illegible]
Y9Ð! ☞[! / Y	わわろうわろ[illegible]	! ⊡[Y	D/t	t[w	a ⊡						を	ﾄ	ﾆ					{! [9! . [9		わゐ ゑれ[illegible]	わゐ ゑれ[illegible]
Y9Ð! ☞[! / Y	わわろうわろ[illegible]	! ⊡[Y	D/t	t[w	a ⊡					ゑ	を	ﾄ	ﾆ			ろエ		{! [9! . [9		わゐ ゑれ[illegible]	わゐ ゑれ[illegible]
Y9Ð! ☞[! / Y	わわろうわろ[illegible]	! ⊡[Y	D/t	t[w	a ⊡	ミ	ォ											{! [9! . [9		わゐ ゑれ[illegible]	わゐ ゑれ[illegible]
Y9Ð! ☞[! / Y	わわろうわろ[illegible]	! ⊡[Y	D/t	t[w	a ⊡	ミ	ォ	オ	∂	ゑ	を	ﾄ	ﾆ					{! [9! . [9		わゐ ゑれ[illegible]	わゐ ゑれ[illegible]
Y9Ð! ☞[! / Y	わわろうわろ[illegible]	! ⊡[Y	D/t	t[w	a ⊡	ミ	ォ	オ	∂	ゑ	を	ﾄ	ﾆ					{! [9! . [9		わゐ ゑれ[illegible]	わゐ ゑれ[illegible]
Y9Ð/ ☞5! wY DwŁ £	わわろうわろ[illegible]	/ ⊡5D	D/t	t[w	a ⊡	ミ					を	ﾄ						{! [9! . [9		わゐ ゑれ[illegible]	わゐ ゑれ[illegible]
Y9Ð/ ☞wh° b	わわろうわろ[illegible]	/ ⊡w	D/t	t[w	a ⊡	ミ	ォ	オ	∂	ゑ	を							bh¤ w9/ ha a 9b595	{99 わわろうわろ[illegible]	わゐ ゑれ[illegible]	わゐ ゑれ[illegible]
Y9Ð/ ☞wh° b	わわろうわろ[illegible]	/ ⊡w	D/t	t[w	a ⊡	ミ	ォ			ゑ	を							bh¤ w9/ ha a 9b595	{99 わわろうわろ[illegible]	わゐ ゑれ[illegible]	わゐ ゑれ[illegible]
Y9Ð! ☞[! / Y	わわろうわろ[illegible]	! ⊡[Y	D/t	t[w	a ⊡			オ				ﾄ			ろォ	ろエ	ろォ	{! [9! . [9		わゐ ゑれ[illegible]	わゐ ゑれ[illegible]
Y9Ð! ☞[! / Y	わわろうわろ[illegible]	! ⊡[Y	D/t	t[w	a ⊡			オ							ろォ	ろエ	ろォ	{! [9! . [9		わゐ ゑれ[illegible]	わゐ ゑれ[illegible]
Y9Ð! ☞[! / Y	わわろうわろ[illegible]	! ⊡[Y	D/t	t[w	a ⊡			オ										{! [9! . [9		わゐ ゑれ[illegible]	わゐ ゑれ[illegible]
Y9Ð! ☞[! / Y	わわろうわろ[illegible]	! ⊡[Y	D/t	t[w	a ⊡					ゑ	を	ﾄ			ろォ	ろエ		{! [9! . [9		わゐ ゑれ[illegible]	わゐ ゑれ[illegible]
Y9Ð! ☞[! / Y	わわろうわろ[illegible]	! ⊡[Y	D/t	t[w	a ⊡							ﾄ				ろエ		{! [9! . [9		わゐ ゑれ[illegible]	わゐ ゑれ[illegible]
Y9Ð/ ☞5! wY DwŁ £	わわろうわろ[illegible]	/ ⊡5D	D/t	t[w	a ⊡	ミ	ォ	オ	∂	ゑ	を							{! [9! . [9		わゐ ゑれ[illegible]	わゐ ゑれ[illegible]
Y9Ð/ ☞5! wY DwŁ £	わわろうわろ[illegible]	/ ⊡5D	D/t	t[w	a ⊡	ミ	ォ			ゑ	を							{! [9! . [9		わゐ ゑれ[illegible]	わゐ ゑれ[illegible]
Y9Ð! ☞[! / Y	わわろうわろ[illegible]	! ⊡[Y	D/t	t[w	a ⊡	ミ	ォ	オ	∂						ろォ	ろエ	ろォ	{! [9! . [9		わゐ ゑれ[illegible]	わゐ ゑれ[illegible]
Y9Ð! ☞[! / Y	わわろうわろ[illegible]	! ⊡[Y	D/t	t[w	a ⊡	ミ	ォ				を	ﾄ	ﾆ				ろォ	{! [9! . [9		わゐ ゑれ[illegible]	わゐ ゑれ[illegible]
Y9Ð! ☞[! / Y	わわろうわろ[illegible]	! ⊡[Y	D/t	t[w	a ⊡				∂	ゑ		ﾄ	ﾆ		ろォ			{! [9! . [9		わゐ ゑれ[illegible]	わゐ ゑれ[illegible]
Y9Ð! ☞[! / Y	わわろうわろ[illegible]	! ⊡[Y	D/t	t[w	a ⊡				∂						ろォ			{! [9! . [9		わゐ ゑれ[illegible]	わゐ ゑれ[illegible]
Y9Ð! ☞[! / Y	わわろうわろ[illegible]	! ⊡[Y	D/t	t[w	a ⊡				∂	ゑ			ﾆ		ろォ			{! [9! . [9		わゐ ゑれ[illegible]	わゐ ゑれ[illegible]
Y9Ð! ☞[! / Y	わわろうわろ[illegible]	! ⊡[Y	D/t	t[w	a ⊡	ミ	ォ		∂	ゑ	を	ﾄ					ろォ	{! [9! . [9		わゐ ゑれ[illegible]	わゐ ゑれ[illegible]
Y9Ð! ☞Ð9[[h°	わわろうわろ[illegible]	! ⊞[	D/t	t[w	a ⊡													{! [9! . [9		わゐ ゑれ[illegible]	わゐ ゑれ[illegible]
Y9Ð. ☞[ŁDI ¤ DwŁ £	わわろうわろ[illegible]	. ⊞D	D/t	t[w	a ⊡					ゑ			ﾆ					{! [9! . [9		わゐ ゑれ[illegible]	わゐ ゑれ[illegible]
Y9Ð. ☞[ŁDI ¤ DwŁ £	わわろうわろ[illegible]	. ⊞D	D/t	t[w	a ⊡					ゑ			ﾆ			ろエ	ろォ	{! [9! . [9		わゐ ゑれ[illegible]	わゐ ゑれ[illegible]
Y9Ð. ☞[ŁDI ¤ DwŁ £	わわろうわろ[illegible]	. ⊞D	D/t	t[w	a ⊡			オ	∂	ゑ			ﾆ		ろォ	ろエ	ろォ	{! [9! . [9		わゐ ゑれ[illegible]	わゐ ゑれ[illegible]
Y9Ð. ☞[ŁDI ¤ DwŁ £	わわろうわろ[illegible]	. ⊞D	D/t	t[w	a ⊡	ミ	ォ	オ	∂	ゑ			ﾆ		ろォ	ろエ	ろォ	{! [9! . [9		わゐ ゑれ[illegible]	わゐ ゑれ[illegible]
Y9Ð! ☞[! / Y	わわろうわろ[illegible]	! ⊡[Y	D/t	t[w	a ⊡	ミ	ォ	オ		ゑ						ろエ		{! [9! . [9		わゐ ゑれ[illegible]	わゐ ゑれ[illegible]
Y9Ð! ☞[! / Y	わわろうわろ[illegible]	! ⊡[Y	D/t	t[w	a ⊡		ォ	オ		ゑ						ろエ		{! [9! . [9		わゐ ゑれ[illegible]	わゐ ゑれ[illegible]
Y9Ð! ☞[! / Y	わわろうわろ[illegible]	! ⊡[Y	D/t	t[w	a ⊡	ミ	ォ	オ								ろエ		{! [9! . [9		わゐ ゑれ[illegible]	わゐ ゑれ[illegible]
Y9Ð! ☞[! / Y	わわろうわろ[illegible]	! ⊡[Y	D/t	t[w	a ⊡	ミ	ォ	オ	∂	ゑ						ろエ	ろォ	{! [9! . [9		わゐ ゑれ[illegible]	わゐ ゑれ[illegible]
Y9Ð! ☞[! / Y	わわろうわろ[illegible]	! ⊡[Y	D/t	t[w	a ⊡		ォ	オ	∂	ゑ						ろエ	ろォ	{! [9! . [9		わゐ ゑれ[illegible]	わゐ ゑれ[illegible]
Y9Ð! ☞[! / Y	わわろうわろ[illegible]	! ⊡[Y	D/t	t[w	a ⊡	ミ												{! [9! . [9		わゐ ゑれ[illegible]	わゐ ゑれ[illegible]
Y9Ð! ☞[! / Y	わわろうわろ[illegible]	! ⊡[Y	D/t	t[w	a ⊡	ミ	ォ	オ										{! [9! . [9		わゐ ゑれ[illegible]	わゐ ゑれ[illegible]
Y9Ð. ☞[ŁDI ¤ DwŁ £	わわろうわろ[illegible]	. ⊞D	D/t	t[w	a ⊡	ミ	ォ	オ	∂		を					ろエ	ろォ	{! [9! . [9		わゐ ゑれ[illegible]	わゐ ゑれ[illegible]
Y9Ð! ☞[! / Y	わわろうわろ[illegible]	! ⊡[Y	D/t	t[w	a ⊡				∂			ﾄ	ﾆ					{! [9! . [9		わゐ ゑれ[illegible]	わゐ ゑれ[illegible]
Y9Ð! ☞[! / Y	わわろうわろ[illegible]	! ⊡[Y	D/t	t[w	a ⊡		ォ						ﾆ					{! [9! . [9		わゐ ゑれ[illegible]	わゐ ゑれ[illegible]
Y9Ð! ☞[! / Y	わわろうわろ[illegible]	! ⊡[Y	D/t	t[w	a ⊡		ォ		∂				ﾆ		ろォ			{! [9! . [9		わゐ ゑれ[illegible]	わゐ ゑれ[illegible]
Y9Ð! ☞[! / Y	わわろうわろ[illegible]	! ⊡[Y	D/t	t[w	a ⊡	ミ	ォ	オ	∂	ゑ	を		ﾆ		ろォ	ろエ	ろォ	{! [9! . [9		わゐ ゑれ[illegible]	わゐ ゑれ[illegible]
Y9Ð! ☞[! / Y	わわろうわろ[illegible]	! ⊡[Y	D/t	t[w	a ⊡	ミ					を	ﾄ	ﾆ				ろォ	{! [9! . [9		わゐ ゑれ[illegible]	わゐ ゑれ[illegible]
Y9Ð! ☞[! / Y	わわろうわろ[illegible]	! ⊡[Y	D/t	t[w	a ⊡		ォ	オ	∂		を		ﾆ		ろォ	ろエ	ろォ	{! [9! . [9		わゐ ゑれ[illegible]	わゐ ゑれ[illegible]
Y9Ð! ☞[! / Y	わわろうわろ[illegible]	! ⊡[Y	D/t	t[w	a ⊡		ォ				を	ﾄ	ﾆ		ろォ	ろエ		{! [9! . [9		わゐ ゑれ[illegible]	わゐ ゑれ[illegible]
Y9Ð! ☞[! / Y	わわろうわろ[illegible]	! ⊡[Y	D/t	t[w	a ⊡	ミ	ォ	オ	∂		を				ろォ	ろエ	ろォ	{! [9! . [9		わゐ ゑれ[illegible]	わゐ ゑれ[illegible]
Y9Ð! ☞[! / Y	わわろうわろ[illegible]	! ⊡[Y	D/t	t[w	a ⊡					ゑ			ﾆ					{! [9! . [9		わゐ ゑれ[illegible]	わゐ ゑれ[illegible]
Y9Ð! ☞[! / Y	わわろうわろ[illegible]	! ⊡[Y	D/t	t[w	a ⊡				∂						ろォ			{! [9! . [9		わゐ ゑれ[illegible]	わゐ ゑれ[illegible]
Y9Ð! ☞[! / Y	わわろうわろ[illegible]	! ⊡[Y	D/t	t[w	a ⊡				∂			ﾄ	ﾆ		ろォ	ろエ	ろォ	{! [9! . [9		わゐ ゑれ[illegible]	わゐ ゑれ[illegible]
Y9Ð! ☞[! / Y	わわろうわろ[illegible]	! ⊡[Y	D/t	t[w	a ⊡					ゑ	を		ﾆ		ろォ	ろエ	ろォ	{! [9! . [9		わゐ ゑれ[illegible]	わゐ ゑれ[illegible]
Y9Ð! ☞[! / Y	わわろうわろ[illegible]	! ⊡[Y	D/t	t[w	a ⊡				∂	ゑ	を		ﾆ		ろォ	ろエ	ろォ	{! [9! . [9		わゐ ゑれ[illegible]	わゐ ゑれ[illegible]
Y9Ð! ☞[! / Y	わわろうわろ[illegible]	! ⊡[Y	D/t	t[w	a ⊡	ミ	ォ	オ		ゑ	を	ﾄ	ﾆ			ろエ	ろォ	{! [9! . [9		わゐ ゑれ[illegible]	わゐ ゑれ[illegible]
Y9Ð! ☞[! / Y	わわろうわろ[illegible]	! ⊡[Y	D/t	t[w	a ⊡				∂	ゑ		ﾄ	ﾆ		ろォ	ろエ	ろォ	{! [9! . [9		わゐ ゑれ[illegible]	わゐ ゑれ[illegible]
Y9Ð! ☞[! / Y	わわろうわろ[illegible]	! ⊡[Y	D/t	t[w	a ⊡				∂			ﾄ			ろォ			{! [9! . [9		わゐ ゑれ[illegible]	わゐ ゑれ[illegible]
Y9Ð! ☞[! / Y	わわろうわろ[illegible]	! ⊡[Y	D/t	t[w	a ⊡						を	ﾄ	ﾆ		ろォ	ろエ	ろォ	{! [9! . [9		わゐ ゑれ[illegible]	わゐ ゑれ[illegible]
Y9Ð! ☞[! / Y	わわろうわろ[illegible]	! ⊡[Y	D/t	t[w	a ⊡	ミ	ォ				を	ﾄ				ろエ	ろォ	{! [9! . [9		わゐ ゑれ[illegible]	わゐ ゑれ[illegible]
Y9Ð! ☞[! / Y	わわろうわろ[illegible]	! ⊡[Y	D/t	t[w	a ⊡					ゑ			ﾆ		ろォ			{! [9! . [9		わゐ ゑれ[illegible]	わゐ ゑれ[illegible]
Y9Ð! ☞[! / Y	わわろうわろ[illegible]	! ⊡[Y	D/t	t[w	a ⊡	ミ	ォ	オ	∂			ﾄ	ﾆ		ろォ	ろエ	ろォ	{! [9! . [9		わゐ ゑれ[illegible]	わゐ ゑれ[illegible]
Y9Ð! ☞[! / Y	わわろうわろ[illegible]	! ⊡[Y	D/t	t[w	a ⊡				∂									{! [9! . [9		わゐ ゑれ[illegible]	わゐ ゑれ[illegible]
Y9Ð! ☞[! / Y	わわろうわろ[illegible]	! ⊡[Y	D/t	t[w	a ⊡	ミ	ォ	オ			を	ﾄ			ろォ	ろエ	ろォ	{! [9! . [9		わゐ ゑれ[illegible]	わゐ ゑれ[illegible]
Y9Ð! ☞[! / Y	わわろうわろ[illegible]	! ⊡[Y	D/t	t[w	a ⊡							ﾄ	ﾆ			ろエ		{! [9! . [9		わゐ ゑれ[illegible]	わゐ ゑれ[illegible]
Y9Ð! ☞[! / Y	わわろうわろ[illegible]	! ⊡[Y	D/t	t[w	a ⊡	ミ		オ		ゑ			ﾆ		ろォ		ろォ	{! [9! . [9		わゐ ゑれ[illegible]	わゐ ゑれ[illegible]
Y9Ð! ☞[! / Y	わわろうわろ[illegible]	! ⊡[Y	D/t	t[w	a ⊡		ォ		∂		を	ﾄ				ろエ		{! [9! . [9		わゐ ゑれ[illegible]	わゐ ゑれ[illegible]
Y9Ð! ☞[! / Y	わわろうわろ[illegible]	! ⊡[Y	D/t	t[w	a ⊡		ォ								ろォ	ろエ	ろォ	{! [9! . [9		わゐ ゑれ[illegible]	わゐ ゑれ[illegible]
Y9Ð! ☞[! / Y	わわろうわろ[illegible]	! ⊡[Y	D/t	t[w	a ⊡							ﾄ			ろォ			{! [9! . [9		わゐ ゑれ[illegible]	わゐ ゑれ[illegible]
Y9Ð! ☞[! / Y	わわろうわろ[illegible]	! ⊡[Y	D/t	t[w	a ⊡		ォ		∂			ﾄ						{! [9! . [9		わゐ ゑれ[illegible]	わゐ ゑれ[illegible]
Y9Ð! ☞[! / Y	わわろうわろ[illegible]	! ⊡[Y	D/t	t[w	a ⊡	ミ	ォ	オ	∂		を				ろォ	ろエ	ろォ	{! [9! . [9		わゐ ゑれ[illegible]	わゐ ゑれ[illegible]
Y9Ð! ☞[! / Y	わわろうわろ[illegible]	! ⊡[Y	D/t	t[w	a ⊡	ミ		オ		ゑ						ろエ	ろォ	{! [9! . [9		わゐ ゑれ[illegible]	わゐ ゑれ[illegible]
Y9Ð! ☞[! / Y	わわろうわろ[illegible]	! ⊡[Y	D/t	t[w	a ⊡	ミ		オ		ゑ			ﾆ		ろォ	ろエ	ろォ	{! [9! . [9		わゐ ゑれ[illegible]	わゐ ゑれ[illegible]

a ﾉEろゑれゎEを [! 59{9! [95 ! {{Ða ! ¤{9! [
. ha ! b5 t Lb h- ¤{I 99¤

! {{9a . [Ð59{/wLt¤Lhb	! {{9a . [Ðt! w¤ b-a . 9w	/ha thb9b¤				. [h/Y95 ¤9wa Lb! [{												{¤! ¤- {	/ha a 9b¤{	ht¤Lhb! [! ¤¤! ¤/I a 9b¤{ {h[5 {9t 9W! ¤9[Ð	
		¤I 9 t w9{9b/9 hC! b ! . . w9¹ L! ¤Lhb Lb5L/! ¤9{ ¤I 9 t w9{9b/9 hC¤I ! ¤/ha thb9b¤				/! ¹ L¤Ð° L¤I ! b- a . 9wLb5L/! ¤9{ . [h/Y95 ¤9wa Lb! [t h{L¤Lhb /! ¹ L¤Ð° L¤I h- ¤! b- a . 9wLb5L/! ¤9{ ht9b ¤9wa Lb! [t h{L¤Lhb															
		I h-{LbD Y9Ð≰h[hw	Dwha a 9¤ /! t	t[w	a ! ¤{9! [	ろ	ゎ	わ	ゐ	ゑ	を	ん	ゔ	゛	ろれ	ろろ	ろゎ			.! /Y{I 9[[° L¤I wL{	.! /Y{I 9[[° L¤I h- ¤ wL{
Y9Ð! ☞[! / Y	わわろうわ卷うお	! ⊡[Y	D/ t	t[w	a ⊡		ｫ					ｶ	ﾆ					{! [9! . [9		ゎゐ 盗れ⊡ろゎろお	ゎゐ 盗れ⊡ろゎゎお
Y9Ð! ☞[! / Y	わわろうわ卷うえ	! ⊡[Y	D/ t	t[w	a ⊡		ｫ		ƌ			ｶ	ﾆ					{! [9! . [9		ゎゐ 盗れ⊡ろゎろお	ゎゐ 盗れ⊡ろゎゎお
Y9Ð! ☞[! / Y	わわろうわ卷うゎ	! ⊡[Y	D/ t	t[w	a ⊡				ƌ	ゑ	ぞ		ﾆ		ろｵ	ろﾆ		{! [9! . [9		ゎゐ 盗れ⊡ろゎろお	ゎゐ 盗れ⊡ろゎゎお
Y9Ð! ☞[! / Y	わわろうわ卷うお	! ⊡[Y	D/ t	t[w	a ⊡	ž	ｫ	ｵ	ƌ			ｶ	ﾆ		ろｵ	ろﾆ		{! [9! . [9		ゎゐ 盗れ⊡ろゎろお	ゎゐ 盗れ⊡ろゎゎお
Y9Ð! ☞[! / Y	わわろうわ卷うゐ	! ⊡[Y	D/ t	t[w	a ⊡			ｵ	ƌ						ろｵ			{! [9! . [9		ゎゐ 盗れ⊡ろゎろお	ゎゐ 盗れ⊡ろゎゎお
Y9Ð! ☞[! / Y	わわろうわ卷うゑ	! ⊡[Y	D/ t	t[w	a ⊡			ｵ	ƌ							ろﾆ	ろｫ	{! [9! . [9		ゎゐ 盗れ⊡ろゎろお	ゎゐ 盗れ⊡ろゎゎお
Y9Ð! ☞[! / Y	わわろうわ卷うを	! ⊡[Y	D/ t	t[w	a ⊡	ž	ｫ	ｵ	ƌ		ぞ	ｶ	ﾆ		ろｵ	ろﾆ		{! [9! . [9		ゎゐ 盗れ⊡ろゎろお	ゎゐ 盗れ⊡ろゎゎお
Y9Ð! ☞[! / Y	わわろうわ卷うん	! ⊡[Y	D/ t	t[w	a ⊡	ž	ｫ	ｵ	ƌ	ゑ	ぞ	ｶ	ﾆ				ろｫ	{! [9! . [9		ゎゐ 盗れ⊡ろゎろお	ゎゐ 盗れ⊡ろゎゎお
Y9Ð! ☞[! / Y	わわろうわ卷うゔ	! ⊡[Y	D/ t	t[w	a ⊡	ž	ｫ	ｵ							ろｵ	ろﾆ	ろｫ	{! [9! . [9		ゎゐ 盗れ⊡ろゎろお	ゎゐ 盗れ⊡ろゎゎお
Y9Ð! ☞[! / Y	わわろうわ卷う゛	! ⊡[Y	D/ t	t[w	a ⊡	ž	ｫ	ｵ			ぞ					ろﾆ	ろｫ	{! [9! . [9		ゎゐ 盗れ⊡ろゎろお	ゎゐ 盗れ⊡ろゎゎお
Y9Ð! ☞[! / Y	わわろうわ卷わお	! ⊡[Y	D/ t	t[w	a ⊡	ž		ｵ	ƌ							ろﾆ		{! [9! . [9		ゎゐ 盗れ⊡ろゎろお	ゎゐ 盗れ⊡ろゎゎお
Y9Ð! ☞[! / Y	わわろうわ卷わミ	! ⊡[Y	D/ t	t[w	a ⊡	ž	ｫ	ｵ			ぞ				ろｵ	ろﾆ	ろｫ	{! [9! . [9		ゎゐ 盗れ⊡ろゎろお	ゎゐ 盗れ⊡ろゎゎお
Y9Ð! ☞[! / Y	わわろうわ卷わゎ	! ⊡[Y	D/ t	t[w	a ⊡	ž		ｵ	ƌ							ろﾆ	ろｫ	{! [9! . [9		ゎゐ 盗れ⊡ろゎろお	ゎゐ 盗れ⊡ろゎゎお
Y9Ð! ☞[! / Y	わわろうわ卷わお	! ⊡[Y	D/ t	t[w	a ⊡				ƌ	ゑ		ｶ				ろﾆ	ろｫ	{! [9! . [9		ゎゐ 盗れ⊡ろゎろお	ゎゐ 盗れ⊡ろゎゎお
Y9Ð. ☞[LDI ¤ DwL £	わわろうわ卷わゐ	. [D	D/ t	t[w	a ⊡	ž	ｫ	ｵ	ƌ				ﾆ		ろｵ	ろﾆ	ろｫ	{! [9! . [9		ゎゐ 盗れ⊡ろゎろお	ゎゐ 盗れ⊡ろゎゎお
Y9Ð. ☞[LDI ¤ DwL £	わわろうわ卷わゑ	. [D	D/ t	t[w	a ⊡	ž	ｫ	ｵ	ƌ				ﾆ		ろｵ			{! [9! . [9		ゎゐ 盗れ⊡ろゎろお	ゎゐ 盗れ⊡ろゎゎお
Y9Ð! ☞[! / Y	わわろうわ卷わを	! ⊡[Y	D/ t	t[w	a ⊡	ž					ぞ	ｶ	ﾆ		ろｵ			{! [9! . [9		ゎゐ 盗れ⊡ろゎろお	ゎゐ 盗れ⊡ろゎゎお
Y9Ð! ☞[! / Y	わわろうわ卷わん	! ⊡[Y	D/ t	t[w	a ⊡				ƌ		ぞ		ﾆ					{! [9! . [9		ゎゐ 盗れ⊡ろゎろお	ゎゐ 盗れ⊡ろゎゎお
Y9Ð! ☞[! / Y	わわろうわ卷わゔ	! ⊡[Y	D/ t	t[w	a ⊡				ƌ	ゑ	ぞ	ｶ				ろﾆ	ろｫ	{! [9! . [9		ゎゐ 盗れ⊡ろゎろお	ゎゐ 盗れ⊡ろゎゎお
Y9Ð! ☞[! / Y	わわろうわ卷わ゛	! ⊡[Y	D/ t	t[w	a ⊡	ž	ｫ	ｵ	ƌ	ゑ	ぞ	ｶ	ﾆ			ろﾆ	ろｫ	{! [9! . [9		ゎゐ 盗れ⊡ろゎろお	ゎゐ 盗れ⊡ろゎゎお
Y9Ð! ☞[! / Y	わわろうわ卷ろれお	! ⊡[Y	D/ t	t[w	a ⊡	ž	ｫ	ｵ				ｶ	ﾆ					{! [9! . [9		ゎゐ 盗れ⊡ろゎろお	ゎゐ 盗れ⊡ろゎゎお
Y9Ð! ☞[! / Y	わわろうわ卷ろれえ	! ⊡[Y	D/ t	t[w	a ⊡	ž	ｫ	ｵ				ｶ	ﾆ		ろｵ			{! [9! . [9		ゎゐ 盗れ⊡ろゎろお	ゎゐ 盗れ⊡ろゎゎお
Y9Ð! ☞[! / Y	わわろうわ卷ろれゎ	! ⊡[Y	D/ t	t[w	a ⊡				ƌ	ゑ	ぞ		ﾆ					{! [9! . [9		ゎゐ 盗れ⊡ろゎろお	ゎゐ 盗れ⊡ろゎゎお
Y9Ð! ☞[! / Y	わわろうわ卷ろれお	! ⊡[Y	D/ t	t[w	a ⊡					ゑ	ぞ	ｶ	ﾆ		ろｵ	ろﾆ	ろｫ	{! [9! . [9		ゎゐ 盗れ⊡ろゎろお	ゎゐ 盗れ⊡ろゎゎお
Y9Ð! ☞[! / Y	わわろうわ卷ろれゐ	! ⊡[Y	D/ t	t[w	a ⊡					ゑ	ぞ	ｶ	ﾆ				ろｫ	{! [9! . [9		ゎゐ 盗れ⊡ろゎろお	ゎゐ 盗れ⊡ろゎゎお
Y9Ð! ☞[! / Y	わわろうわ卷ろれゑ	! ⊡[Y	D/ t	t[w	a ⊡							ｶ	ﾆ				ろｫ	{! [9! . [9		ゎゐ 盗れ⊡ろゎろお	ゎゐ 盗れ⊡ろゎゎお
Y9Ð! ☞[! / Y	わわろうわ卷ろれを	! ⊡[Y	D/ t	t[w	a ⊡		ｫ	ｵ		ゑ	ぞ	ｶ			ろｵ	ろﾆ	ろｫ	{! [9! . [9		ゎゐ 盗れ⊡ろゎろお	ゎゐ 盗れ⊡ろゎゎお
Y9Ð! ☞[! / Y	わわろうわ卷ろれん	! ⊡[Y	D/ t	t[w	a ⊡			ｵ							ろｵ	ろﾆ	ろｫ	{! [9! . [9		ゎゐ 盗れ⊡ろゎろお	ゎゐ 盗れ⊡ろゎゎお
Y9Ð! ☞[! / Y	わわろうわ卷ろれゔ	! ⊡[Y	D/ t	t[w	a ⊡				ƌ	ゑ	ぞ	ｶ	ﾆ		ろｵ	ろﾆ	ろｫ	{! [9! . [9		ゎゐ 盗れ⊡ろゎろお	ゎゐ 盗れ⊡ろゎゎお
Y9Ð! ☞[! / Y	わわろうわ卷ろれ	! ⊡[Y	D/ t	t[w	a ⊡			ｵ	ƌ	ゑ	ぞ	ｶ	ﾆ		ろｵ	ろﾆ	ろｫ	{! [9! . [9		ゎゐ 盗れ⊡ろゎろお	ゎゐ 盗れ⊡ろゎゎお
Y9Ð! ☞[! / Y	わわろうわ卷ろろお	! ⊡[Y	D/ t	t[w	a ⊡	ž	ｫ	ｵ	ƌ				ﾆ					{! [9! . [9		ゎゐ 盗れ⊡ろゎろお	ゎゐ 盗れ⊡ろゎゎお
Y9Ð! ☞[! / Y	わわろうわ卷ろろえ	! ⊡[Y	D/ t	t[w	a ⊡		ｫ	ｵ										{! [9! . [9		ゎゐ 盗れ⊡ろゎろお	ゎゐ 盗れ⊡ろゎゎお
Y9Ð! ☞[! / Y	わわろうわ卷ろろゎ	! ⊡[Y	D/ t	t[w	a ⊡								ﾆ		ろｵ	ろﾆ		{! [9! . [9		ゎゐ 盗れ⊡ろゎろお	ゎゐ 盗れ⊡ろゎゎお
Y9Ð! ☞[! / Y	わわろうわ卷ろろお	! ⊡[Y	D/ t	t[w	a ⊡	ž		ｵ		ゑ						ろﾆ		{! [9! . [9		ゎゐ 盗れ⊡ろゎろお	ゎゐ 盗れ⊡ろゎゎお
Y9Ð! ☞[! / Y	わわろうわ卷ろろゐ	! ⊡[Y	D/ t	t[w	a ⊡	ž		ｵ		ゑ			ﾆ		ろｵ	ろﾆ		{! [9! . [9		ゎゐ 盗れ⊡ろゎろお	ゎゐ 盗れ⊡ろゎゎお
Y9Ð! ☞[! / Y	わわろうわ卷ろろゑ	! ⊡[Y	D/ t	t[w	a ⊡		ｫ	ｵ		ゑ	ぞ	ｶ				ろﾆ	ろｫ	{! [9! . [9		ゎゐ 盗れ⊡ろゎろお	ゎゐ 盗れ⊡ろゎゎお
Y9Ð! ☞[! / Y	わわろうわ卷ろろを	! ⊡[Y	D/ t	t[w	a ⊡	ž			ƌ	ゑ	ぞ		ﾆ		ろｵ		ろｫ	{! [9! . [9		ゎゐ 盗れ⊡ろゎろお	ゎゐ 盗れ⊡ろゎゎお
Y9Ð! ☞[! / Y	わわろうわ卷ろろん	! ⊡[Y	D/ t	t[w	a ⊡	ž			ƌ	ゑ			ﾆ		ろｵ		ろｫ	{! [9! . [9		ゎゐ 盗れ⊡ろゎろお	ゎゐ 盗れ⊡ろゎゎお
Y9Ð! ☞[! / Y	わわろうわ卷ろろゔ	! ⊡[Y	D/ t	t[w	a ⊡	ž	ｫ	ｵ	ƌ	ゑ			ﾆ		ろｵ	ろﾆ	ろｫ	{! [9! . [9		ゎゐ 盗れ⊡ろゎろお	ゎゐ 盗れ⊡ろゎゎお
Y9Ð! ☞[! / Y	わわろうわ卷ろろ	! ⊡[Y	D/ t	t[w	a ⊡		ｫ	ｵ		ゑ	ぞ	ｶ			ろｵ	ろﾆ	ろｫ	{! [9! . [9	{99 わわろうわ卷ろれを	ゎゐ 盗れ⊡ろゎろお	ゎゐ 盗れ⊡ろゎゎお
Y9Ð! ☞[! / Y	わわろうわ卷ろゎお	! ⊡[Y	D/ t	t[w	a ⊡	ž	ｫ	ｵ	ƌ				ﾆ					{! [9! . [9	{99 わわろうわ卷ろろお	ゎゐ 盗れ⊡ろゎろお	ゎゐ 盗れ⊡ろゎゎお
Y9Ð! ☞[! / Y	わわろうわ卷ろゎえ	! ⊡[Y	D/ t	t[w	a ⊡		ｫ	ｵ										{! [9! . [9	{99 わわろうわ卷ろろえ	ゎゐ 盗れ⊡ろゎろお	ゎゐ 盗れ⊡ろゎゎお
Y9Ð! ☞[! / Y	わわろうわ卷ろゎゎ	! ⊡[Y	D/ t	t[w	a ⊡								ﾆ		ろｵ	ろﾆ		{! [9! . [9	{99 わわろうわ卷ろろゎ	ゎゐ 盗れ⊡ろゎろお	ゎゐ 盗れ⊡ろゎゎお
Y9Ð! ☞[! / Y	わわろうわ卷ろゎお	! ⊡[Y	D/ t	t[w	a ⊡	ž		ｵ		ゑ						ろﾆ		{! [9! . [9	{99 わわろうわ卷ろろお	ゎゐ 盗れ⊡ろゎろお	ゎゐ 盗れ⊡ろゎゎお
Y9Ð! ☞[! / Y	わわろうわ卷ろゎゐ	! ⊡[Y	D/ t	t[w	a ⊡	ž		ｵ		ゑ			ﾆ		ろｵ	ろﾆ		{! [9! . [9	{99 わわろうわ卷ろろゐ	ゎゐ 盗れ⊡ろゎろお	ゎゐ 盗れ⊡ろゎゎお
Y9Ð! ☞[! / Y	わわろうわ卷ろゎゑ	! ⊡[Y	D/ t	t[w	a ⊡		ｫ		ƌ		ぞ	ｶ	ﾆ		ろｵ	ろﾆ	ろｫ	{! [9! . [9		ゎゐ 盗れ⊡ろゎろお	ゎゐ 盗れ⊡ろゎゎお
Y9Ð! ☞[! / Y	わわろうわ卷ろゎを	! ⊡[Y	D/ t	t[w	a ⊡			ｵ	ƌ							ろﾆ	ろｫ	{! [9! . [9	{99 わわろうわ卷うゑ	ゎゐ 盗れ⊡ろゎろお	ゎゐ 盗れ⊡ろゎゎお
Y9Ð! ☞[! / Y	わわろうわ卷ろゎん	! ⊡[Y	D/ t	t[w	a ⊡			ｵ	ƌ						ろｵ	ろﾆ	ろｫ	{! [9! . [9	{99 わわろうわ卷わお	ゎゐ 盗れ⊡ろゎろお	ゎゐ 盗れ⊡ろゎゎお
Y9Ð! ☞[! / Y	わわろうわ卷ろゎゔ	! ⊡[Y	D/ t	t[w	a ⊡	ž	ｫ			ゑ	ぞ	ｶ	ﾆ		ろｵ			{! [9! . [9		ゎゐ 盗れ⊡ろゎろお	ゎゐ 盗れ⊡ろゎゎお
Y9Ð! ☞[! / Y	わわろうわ卷ろゎ	! ⊡[Y	D/ t	t[w	a ⊡										ろｵ			{! [9! . [9		ゎゐ 盗れ⊡ろゎろお	ゎゐ 盗れ⊡ろゎゎお
Y9Ð! ☞[! / Y	わわろうわ卷ろゎお	! ⊡[Y	D/ t	t[w	a ⊡			ｵ	ƌ	ゑ	ぞ		ﾆ					{! [9! . [9		ゎゐ 盗れ⊡ろゎろお	ゎゐ 盗れ⊡ろゎゎお
Y9Ð. ☞[LDI ¤ DwL £	わわろうわ卷ろゎえ	. [D	D/ t	t[w	a ⊡	ž	ｫ	ｵ	ƌ				ﾆ			ろﾆ	ろｫ	{! [9! . [9		ゎゐ 盗れ⊡ろゎろお	ゎゐ 盗れ⊡ろゎゎお
Y9Ð. ☞[LDI ¤ DwL £	わわろうわ卷ろゎゎ	. [D	D/ t	t[w	a ⊡	ž	ｫ	ｵ	ƌ				ﾆ					{! [9! . [9		ゎゐ 盗れ⊡ろゎろお	ゎゐ 盗れ⊡ろゎゎお
Y9Ð! ☞[! / Y	わわろうわ卷ろゎお	! ⊡[Y	D/ t	t[w	a ⊡										ろｵ	ろﾆ	ろｫ	{! [9! . [9	{99 わわろうわ卷わゐ	ゎゐ 盗れ⊡ろゎろお	ゎゐ 盗れ⊡ろゎゎお
Y9Ð. ☞[LDI ¤ DwL £	わわろうわ卷ろゎゐ	. [D	D/ t	t[w	a ⊡							ｶ	ﾆ				ろｫ	{! [9! . [9		ゎゐ 盗れ⊡ろゎろお	ゎゐ 盗れ⊡ろゎゎお
Y9Ð! ☞[! / Y	わわろうわ卷ろゎゑ	! ⊡[Y	D/ t	t[w	a ⊡							ｶ	ﾆ		ろｵ	ろﾆ	ろｫ	{! [9! . [9	{99 わわろうわ卷ろれを	ゎゐ 盗れ⊡ろゎろお	ゎゐ 盗れ⊡ろゎゎお
Y9Ð! ☞[! / Y	わわろうわ卷ろゎを	! ⊡[Y	D/ t	t[w	a ⊡		ｫ						ﾆ		ろｵ	ろﾆ	ろｫ	{! [9! . [9		ゎゐ 盗れ⊡ろゎろお	ゎゐ 盗れ⊡ろゎゎお
Y9Ð! ☞[! / Y	わわろうわ卷ろゎん	! ⊡[Y	D/ t	t[w	a ⊡		ｫ						ﾆ					{! [9! . [9		ゎゐ 盗れ⊡ろゎろお	ゎゐ 盗れ⊡ろゎゎお
Y9Ð. ☞[LDI ¤ DwL £	わわろうわ卷ろゎゔ	. [D	D/ t	t[w	a ⊡	ž	ｫ	ｵ	ƌ				ﾆ			ろﾆ	ろｫ	bh¤w9/ha a 9b595	{99 わわろうわ卷ろろゔ	ゎゐ 盗れ⊡ろゎろお	ゎゐ 盗れ⊡ろゎゎお
Y9Ð. ☞[LDI ¤ DwL £	わわろうわ卷ろゎ	. [D	D/ t	t[w	a ⊡	ž	ｫ	ｵ	ƌ				ﾆ					bh¤w9/ha a 9b595	{99 わわろうわ卷ろろ	ゎゐ 盗れ⊡ろゎろお	ゎゐ 盗れ⊡ろゎゎお
Y9Ð! ☞[! / Y	わわろうわ卷ろろお	! ⊡[Y	D/ t	t[w	a ⊡	ž	ｫ				ぞ				ろｵ			{! [9! . [9		ゎゐ 盗れ⊡ろゎろお	ゎゐ 盗れ⊡ろゎゎお
Y9Ð! ☞[! / Y	わわろうわ卷ろろえ	! ⊡[Y	D/ t	t[w	a ⊡	ž	ｫ	ｵ			ぞ	ｶ			ろｵ	ろﾆ	ろｫ	{! [9! . [9	{99 わわろうわ卷うゎお	ゎゐ 盗れ⊡ろゎろお	ゎゐ 盗れ⊡ろゎゎお
Y9Ð! ☞[! / Y	わわろうわ卷ろろゎ	! ⊡[Y	D/ t	t[w	a ⊡		ｫ		ƌ		ぞ		ﾆ					{! [9! . [9		ゎゐ 盗れ⊡ろゎろお	ゎゐ 盗れ⊡ろゎゎお
Y9Ð! ☞[! / Y	わわろうわ卷ろろお	! ⊡[Y	D/ t	t[w	a ⊡		ｫ		ƌ		ぞ							{! [9! . [9		ゎゐ 盗れ⊡ろゎろお	ゎゐ 盗れ⊡ろゎゎお
Y9Ð! ☞[! / Y	わわろうわ卷ろろゐ	! ⊡[Y	D/ t	t[w	a ⊡			ｵ	ƌ		ぞ		ﾆ					{! [9! . [9		ゎゐ 盗れ⊡ろゎろお	ゎゐ 盗れ⊡ろゎゎお
Y9Ð! ☞[! / Y	わわろうわ卷ろろゑ	! ⊡[Y	D/ t	t[w	a ⊡				ƌ			ｶ			ろｵ	ろﾆ	ろｫ	{! [9! . [9		ゎゐ 盗れ⊡ろゎろお	ゎゐ 盗れ⊡ろゎゎお
Y9Ð/☞5! wY DwL £	わわろうわ卷ろろを	/ 5D	D/ t	t[w	a ⊡			ｵ	ƌ									{! [9! . [9		ゎゐ 盗れ⊡ろゎろお	ゎゐ 盗れ⊡ろゎゎお
Y9Ð! ☞[! / Y	わわろうわ卷ろろん	! ⊡[Y	D/ t	t[w	a ⊡	ž	ｫ	ｵ			ぞ		ﾆ			ろﾆ	ろｫ	{! [9! . [9		ゎゐ 盗れ⊡ろゎろお	ゎゐ 盗れ⊡ろゎゎお
Y9Ð! ☞[! / Y	わわろうわ卷ろろゔ	! ⊡[Y	D/ t	t[w	a ⊡					ゑ	ぞ	ｶ	ﾆ		ろｵ			{! [9! . [9		ゎゐ 盗れ⊡ろゎろお	ゎゐ 盗れ⊡ろゎゎお
Y9Ð. ☞[LDI ¤ DwL £	わわろうわ卷ろろ	. [D	D/ t	t[w	a ⊡							ｶ			ろｵ	ろﾆ	ろｫ	{! [9! . [9		ゎゐ 盗れ⊡ろゎろお	ゎゐ 盗れ⊡ろゎゎお
Y9Ð! ☞[! / Y	わわろうわ卷ろゑお	! ⊡[Y	D/ t	t[w	a ⊡		ｫ	ｵ		ゑ	ぞ	ｶ	ﾆ		ろｵ	ろﾆ	ろｫ	{! [9! . [9		ゎゐ 盗れ⊡ろゎろお	ゎゐ 盗れ⊡ろゎゎお
Y9Ð! ☞[! / Y	わわろうわ卷ろゑえ	! ⊡[Y	D/ t	t[w	a ⊡					ゑ	ぞ	ｶ	ﾆ					{! [9! . [9		ゎゐ 盗れ⊡ろゎろお	ゎゐ 盗れ⊡ろゎゎお
Y9Ð! ☞[! / Y	わわろうわ卷ろゑゎ	! ⊡[Y	D/ t	t[w	a ⊡			ｵ	ƌ				ﾆ		ろｵ	ろﾆ	ろｫ	{! [9! . [9		ゎゐ 盗れ⊡ろゎろお	ゎゐ 盗れ⊡ろゎゎお

molex

a ΛEゑれわΛEを [!59{9! [95!{{Ða!¤{9![
.ha !b5 tLb h-¤{I 99¤

!{{9a .[Ð59{/wLt¤Lhb	!{{9a .[Ðt!w¤ b-a .9w	/hathb9b¤				.[h/Y95 ¤9wa Lb![{												{¤! ¤-{	/ha a 9b¤{	ht¤Lhb![!¤¤!¤/I a 9b¤{ {h[5 {9t 9W!¤9[Ð	
		¤I 9tw9{9b/9hC!b!..w9¹L!¤Lhb Lb5L/!¤9{ ¤I 9 tw9{9b/9hC¤I!¤/hathb9b¤♔				/!¹L¤Ð° L¤I ! b-a .9wLb5L/!¤9{ .[h/Y95 ¤9wa Lb![th{L¤Lhb /!¹L¤Ð° L¤I h-¤! b-a .9wLb5L/!¤9{ ht9b ¤9wa Lb![th{L¤Lhb															
		I h-{LbD Y9Ð♔h[hw	Dwha a 9¤ /!t	t[w	a !¤{9![	ろ	ゎ	わ	ゐ	ゑ	を	ん	ゔ	゛	ゑれ	ゑゐ	ゑゎ			.!/Y{I 9[[° L¤I wL{	.!/Y{I 9[[° L¤I h-¤ wL{
Y9Ð!☞[!/Y	[illegible]	! ⊡[Y	D/t	t[w	a ⊡	ミ	ｫ	ｵ	ð				ニ		ろｵ	ろぇ	ろｫ	{![9!.[9		わゐ ゑれ図わ図	わゐ ゑれ図わわ
Y9Ð!☞[!/Y	[illegible]	! ⊡[Y	D/t	t[w	a ⊡	ミ		ｵ	ð			ん	ニ				ろｫ	{![9!.[9		わゐ ゑれ図わ図	わゐ ゑれ図わわ
Y9Ð!☞[!/Y	[illegible]	! ⊡[Y	D/t	t[w	a ⊡	ミ			ð			ん	ニ				ろｫ	{![9!.[9		わゐ ゑれ図わ図	わゐ ゑれ図わわ
Y9Ð!☞[!/Y	[illegible]	! ⊡[Y	D/t	t[w	a ⊡	ミ	ｫ		ð	ゑ	を					ろぇ		{![9!.[9		わゐ ゑれ図わ図	わゐ ゑれ図わわ
Y9Ð!☞[!/Y	[illegible]	! ⊡[Y	D/t	t[w	a ⊡		ｫ		ð	ゑ	を	ん					ろｫ	{![9!.[9		わゐ ゑれ図わ図	わゐ ゑれ図わわ
Y9Ð!☞[!/Y	[illegible]	! ⊡[Y	D/t	t[w	a ⊡		ｫ				を						ろｫ	{![9!.[9		わゐ ゑれ図わ図	わゐ ゑれ図わわ
Y9Ð!☞[!/Y	[illegible]	! ⊡[Y	D/t	t[w	a ⊡			ｵ				ん	ニ					{![9!.[9		わゐ ゑれ図わ図	わゐ ゑれ図わわ
Y9Ð!☞[!/Y	[illegible]	! ⊡[Y	D/t	t[w	a ⊡	ミ						ん	ニ				ろｫ	{![9!.[9		わゐ ゑれ図わ図	わゐ ゑれ図わわ
Y9Ð!☞[!/Y	[illegible]	! ⊡[Y	D/t	t[w	a ⊡		ｫ			ゑ	を	ん	ニ			ろぇ		{![9!.[9		わゐ ゑれ図わ図	わゐ ゑれ図わわ
Y9Ð!☞[!/Y	[illegible]	! ⊡[Y	D/t	t[w	a ⊡		ｫ	ｵ		ゑ	を	ん	ニ			ろぇ		{![9!.[9		わゐ ゑれ図わ図	わゐ ゑれ図わわ
Y9Ð!☞[!/Y	[illegible]	! ⊡[Y	D/t	t[w	a ⊡	ミ	ｫ		ð	ゑ	を	ん				ろぇ	ろｫ	{![9!.[9		わゐ ゑれ図わ図	わゐ ゑれ図わわ
Y9Ð!☞[!/Y	[illegible]	! ⊡[Y	D/t	t[w	a ⊡	ミ	ｫ		ð	ゑ	を	ん	ニ		ろｵ	ろぇ	ろｫ	{![9!.[9		わゐ ゑれ図わ図	わゐ ゑれ図わわ
Y9Ð!☞[!/Y	[illegible]	! ⊡[Y	D/t	t[w	a ⊡	ミ	ｫ	ｵ	ð	ゑ	を	ん				ろぇ	ろｫ	{![9!.[9		わゐ ゑれ図わ図	わゐ ゑれ図わわ
Y9Ð!☞[!/Y	[illegible]	! ⊡[Y	D/t	t[w	a ⊡												ろｫ	{![9!.[9		わゐ ゑれ図わ図	わゐ ゑれ図わわ
Y9Ð!☞[!/Y	[illegible]	! ⊡[Y	D/t	t[w	a ⊡		ｫ	ｵ	ð									{![9!.[9		わゐ ゑれ図わ図	わゐ ゑれ図わわ
Y9Ð!☞[!/Y	[illegible]	! ⊡[Y	D/t	t[w	a ⊡				ð	ゑ			ニ		ろｵ	ろぇ	ろｫ	{![9!.[9		わゐ ゑれ図わ図	わゐ ゑれ図わわ
Y9Ð!☞[!/Y	[illegible]	! ⊡[Y	D/t	t[w	a ⊡	ミ									ろｵ			{![9!.[9		わゐ ゑれ図わ図	わゐ ゑれ図わわ
Y9Ð!☞[!/Y	[illegible]	! ⊡[Y	D/t	t[w	a ⊡							ん	ニ				ろｫ	{![9!.[9		わゐ ゑれ図わ図	わゐ ゑれ図わわ
Y9Ð/☞5!wY DW! E	[illegible]	/⊡5D	D/t	t[w	a ⊡			ｵ	ð				ニ					{![9!.[9		わゐ ゑれ図わ図	わゐ ゑれ図わわ
Y9Ð!☞[!/Y	[illegible]	! ⊡[Y	D/t	t[w	a ⊡	ミ	ｫ					ん	ニ		ろｵ	ろぇ	ろｫ	{![9!.[9		わゐ ゑれ図わ図	わゐ ゑれ図わわ
Y9Ð!☞[!/Y	[illegible]	! ⊡[Y	D/t	t[w	a ⊡					ゑ		ん	ニ			ろぇ		{![9!.[9		わゐ ゑれ図わ図	わゐ ゑれ図わわ
Y9Ð!☞[!/Y	[illegible]	! ⊡[Y	D/t	t[w	a ⊡	ミ	ｫ			ゑ					ろｵ		ろｫ	{![9!.[9		わゐ ゑれ図わ図	わゐ ゑれ図わわ
Y9Ð!☞[!/Y	[illegible]	! ⊡[Y	D/t	t[w	a ⊡					ゑ								{![9!.[9		わゐ ゑれ図わ図	わゐ ゑれ図わわ
Y9Ð!☞[!/Y	[illegible]	! ⊡[Y	D/t	t[w	a ⊡			ｵ	ð	ゑ								{![9!.[9		わゐ ゑれ図わ図	わゐ ゑれ図わわ
Y9Ð!☞[!/Y	[illegible]	! ⊡[Y	D/t	t[w	a ⊡	ミ	ｫ			ゑ					ろｵ	ろぇ	ろｫ	{![9!.[9		わゐ ゑれ図わ図	わゐ ゑれ図わわ
Y9Ð!☞[!/Y	[illegible]	! ⊡[Y	D/t	t[w	a ⊡					ゑ						ろぇ		{![9!.[9		わゐ ゑれ図わ図	わゐ ゑれ図わわ
Y9Ð!☞[!/Y	[illegible]	! ⊡[Y	D/t	t[w	a ⊡	ミ							ニ			ろぇ		{![9!.[9		わゐ ゑれ図わ図	わゐ ゑれ図わわ
Y9Ð!☞[!/Y	[illegible]	! ⊡[Y	D/t	t[w	a ⊡	ミ			ð	ゑ	を	ん						{![9!.[9		わゐ ゑれ図わ図	わゐ ゑれ図わわ
Y9Ð!☞[!/Y	[illegible]	! ⊡[Y	D/t	t[w	a ⊡	ミ			ð	ゑ	を	ん	ニ			ろぇ		{![9!.[9		わゐ ゑれ図わ図	わゐ ゑれ図わわ
Y9Ð!☞[!/Y	[illegible]	! ⊡[Y	D/t	t[w	a ⊡	ミ	ｫ	ｵ	ð	ゑ	を	ん	ニ			ろぇ		{![9!.[9		わゐ ゑれ図わ図	わゐ ゑれ図わわ
Y9Ð.☞[LDI ¤DW! E	[illegible]	.⊡D	D/t	t[w	a ⊡	ミ					を	ん			ろｵ	ろぇ	ろｫ	{![9!.[9		わゐ ゑれ図わ図	わゐ ゑれ図わわ
Y9Ð.☞[LDI ¤DW! E	[illegible]	.⊡D	D/t	t[w	a ⊡	ミ					を	ん	ニ		ろｵ	ろぇ	ろｫ	{![9!.[9		わゐ ゑれ図わ図	わゐ ゑれ図わわ
Y9Ð.☞[LDI ¤DW! E	[illegible]	.⊡D	D/t	t[w	a ⊡	ミ				ゑ	を	ん	ニ		ろｵ	ろぇ	ろｫ	{![9!.[9		わゐ ゑれ図わ図	わゐ ゑれ図わわ
Y9Ð!☞[!/Y	[illegible]	! ⊡[Y	D/t	t[w	a ⊡	ミ	ｫ			ゑ		ん	ニ		ろｵ	ろぇ	ろｫ	{![9!.[9		わゐ ゑれ図わ図	わゐ ゑれ図わわ
Y9Ð!☞[!/Y	[illegible]	! ⊡[Y	D/t	t[w	a ⊡							ん				ろぇ	ろｫ	{![9!.[9		わゐ ゑれ図わ図	わゐ ゑれ図わわ
Y9Ð!☞[!/Y	[illegible]	! ⊡[Y	D/t	t[w	a ⊡	ミ	ｫ	ｵ	ð	ゑ	を	ん	ニ			ろぇ	ろｫ	{![9!.[9		わゐ ゑれ図わ図	わゐ ゑれ図わわ
Y9Ð!☞[!/Y	[illegible]	! ⊡[Y	D/t	t[w	a ⊡			ｵ				ん	ニ			ろぇ	ろｫ	{![9!.[9		わゐ ゑれ図わ図	わゐ ゑれ図わわ
Y9Ð!☞[!/Y	[illegible]	! ⊡[Y	D/t	t[w	a ⊡	ミ	ｫ	ｵ	ð							ろぇ	ろｫ	{![9!.[9		わゐ ゑれ図わ図	わゐ ゑれ図わわ
Y9Ð!☞[!/Y	[illegible]	! ⊡[Y	D/t	t[w	a ⊡	ミ		ｵ		ゑ		ん						{![9!.[9		わゐ ゑれ図わ図	わゐ ゑれ図わわ
Y9Ð!☞[!/Y	[illegible]	! ⊡[Y	D/t	t[w	a ⊡		ｫ				を	ん	ニ					{![9!.[9		わゐ ゑれ図わ図	わゐ ゑれ図わわ
Y9Ð!☞[!/Y	[illegible]	! ⊡[Y	D/t	t[w	a ⊡					ゑ		ん			ろｵ	ろぇ	ろｫ	{![9!.[9		わゐ ゑれ図わ図	わゐ ゑれ図わわ
Y9Ð!☞[!/Y	[illegible]	! ⊡[Y	D/t	t[w	a ⊡					ゑ					ろｵ	ろぇ		{![9!.[9		わゐ ゑれ図わ図	わゐ ゑれ図わわ
Y9Ð!☞[!/Y	[illegible]	! ⊡[Y	D/t	t[w	a ⊡	ミ	ｫ	ｵ	ð	ゑ	を		ニ		ろｵ	ろぇ		{![9!.[9		わゐ ゑれ図わ図	わゐ ゑれ図わわ
Y9Ð!☞[!/Y	[illegible]	! ⊡[Y	D/t	t[w	a ⊡	ミ	ｫ	ｵ	ð		を	ん	ニ				ろｫ	{![9!.[9		わゐ ゑれ図わ図	わゐ ゑれ図わわ
Y9Ð!☞[!/Y	[illegible]	! ⊡[Y	D/t	t[w	a ⊡							ん					ろｫ	{![9!.[9		わゐ ゑれ図わ図	わゐ ゑれ図わわ
Y9Ð!☞[!/Y	[illegible]	! ⊡[Y	D/t	t[w	a ⊡	ミ	ｫ		ð	ゑ	を	ん	ニ				ろｫ	{![9!.[9		わゐ ゑれ図わ図	わゐ ゑれ図わわ
Y9Ð!☞[!/Y	[illegible]	! ⊡[Y	D/t	t[w	a ⊡			ｵ							ろｵ	ろぇ		{![9!.[9		わゐ ゑれ図わ図	わゐ ゑれ図わわ
Y9Ð!☞[!/Y	[illegible]	! ⊡[Y	D/t	t[w	a ⊡		ｫ			ゑ		ん			ろｵ			{![9!.[9		わゐ ゑれ図わ図	わゐ ゑれ図わわ
Y9Ð!☞[!/Y	[illegible]	! ⊡[Y	D/t	t[w	a ⊡				ð			ん						{![9!.[9		わゐ ゑれ図わ図	わゐ ゑれ図わわ
Y9Ð!☞[!/Y	[illegible]	! ⊡[Y	D/t	t[w	a ⊡				ð		を	ん						{![9!.[9		わゐ ゑれ図わ図	わゐ ゑれ図わわ
Y9Ð!☞[!/Y	[illegible]	! ⊡[Y	D/t	t[w	a ⊡						を	ん	ニ					{![9!.[9		わゐ ゑれ図わ図	わゐ ゑれ図わわ
Y9Ð!☞[!/Y	[illegible]	! ⊡[Y	D/t	t[w	a ⊡		ｫ	ｵ	ð	ゑ	を		ニ		ろｵ	ろぇ	ろｫ	{![9!.[9		わゐ ゑれ図わ図	わゐ ゑれ図わわ
Y9Ð.☞[LDI ¤DW! E	[illegible]	.⊡D	D/t	t[w	a ⊡					ゑ			ニ		ろｵ	ろぇ	ろｫ	{![9!.[9		わゐ ゑれ図わ図	わゐ ゑれ図わわ
Y9Ð!☞[!/Y	[illegible]	! ⊡[Y	D/t	t[w	a ⊡								ニ				ろｫ	{![9!.[9		わゐ ゑれ図わ図	わゐ ゑれ図わわ
Y9Ð!☞[!/Y	[illegible]	! ⊡[Y	D/t	t[w	a ⊡	ミ	ｫ		ð	ゑ	を		ニ					{![9!.[9		わゐ ゑれ図わ図	わゐ ゑれ図わわ
Y9Ð!☞Ð9[[h°	[illegible]	! ⊡I	D/t	t[w	a ⊡			ｵ			を	ん	ニ		ろｵ	ろぇ	ろｫ	{![9!.[9		わゐ ゑれ図わ図	わゐ ゑれ図わわ
Y9Ð!☞[!/Y	[illegible]	! ⊡[Y	D/t	t[w	a ⊡				ð	ゑ		ん	ニ			ろぇ	ろｫ	{![9!.[9		わゐ ゑれ図わ図	わゐ ゑれ図わわ
Y9Ð!☞[!/Y	[illegible]	! ⊡[Y	D/t	t[w	a ⊡							ん	ニ			ろぇ	ろｫ	{![9!.[9		わゐ ゑれ図わ図	わゐ ゑれ図わわ
Y9Ð!☞[!/Y	[illegible]	! ⊡[Y	D/t	t[w	a ⊡								ニ			ろぇ	ろｫ	{![9!.[9		わゐ ゑれ図わ図	わゐ ゑれ図わわ
Y9Ð.☞[LDI ¤DW! E	[illegible]	.⊡D	D/t	t[w	a ⊡	ミ		ｵ		ゑ	を	ん			ろｵ	ろぇ	ろｫ	{![9!.[9		わゐ ゑれ図わ図	わゐ ゑれ図わわ
Y9Ð!☞[!/Y	[illegible]	! ⊡[Y	D/t	t[w	a ⊡	ミ		ｵ									ろｫ	{![9!.[9		わゐ ゑれ図わ図	わゐ ゑれ図わわ
Y9Ð!☞[!/Y	[illegible]	! ⊡[Y	D/t	t[w	a ⊡	ミ	ｫ		ð	ゑ	を	ん	ニ					{![9!.[9		わゐ ゑれ図わ図	わゐ ゑれ図わわ
Y9Ð.☞[LDI ¤DW! E	[illegible]	.⊡D	D/t	t[w	a ⊡								ニ					{![9!.[9		わゐ ゑれ図わ図	わゐ ゑれ図わわ
Y9Ð.☞[LDI ¤DW! E	[illegible]	.⊡D	D/t	t[w	a ⊡											ろぇ		{![9!.[9		わゐ ゑれ図わ図	わゐ ゑれ図わわ
Y9Ð.☞[LDI ¤DW! E	[illegible]	.⊡D	D/t	t[w	a ⊡		ｫ	ｵ	ð	ゑ		ん	ニ			ろぇ		{![9!.[9		わゐ ゑれ図わ図	わゐ ゑれ図わわ
Y9Ð.☞[LDI ¤DW! E	[illegible]	.⊡D	D/t	t[w	a ⊡							ん				ろぇ	ろｫ	{![9!.[9		わゐ ゑれ図わ図	わゐ ゑれ図わわ
Y9Ð.☞[LDI ¤DW! E	[illegible]	.⊡D	D/t	t[w	a ⊡	ミ	ｫ	ｵ				ん	ニ				ろｫ	{![9!.[9		わゐ ゑれ図わ図	わゐ ゑれ図わわ
Y9Ð.☞[LDI ¤DW! E	[illegible]	.⊡D	D/t	t[w	a ⊡	ミ	ｫ	ｵ	ð	ゑ		ん				ろぇ	ろｫ	{![9!.[9		わゐ ゑれ図わ図	わゐ ゑれ図わわ
Y9Ð!☞[!/Y	[illegible]	! ⊡[Y	D/t	t[w	a ⊡	ミ	ｫ	ｵ	ð	ゑ								{![9!.[9		わゐ ゑれ図わ図	わゐ ゑれ図わわ
Y9Ð!☞[!/Y	[illegible]	! ⊡[Y	D/t	t[w	a ⊡	ミ					を	ん	ニ		ろｵ	ろぇ	ろｫ	{![9!.[9		わゐ ゑれ図わ図	わゐ ゑれ図わわ
Y9Ð.☞[LDI ¤DW! E	[illegible]	.⊡D	D/t	t[w	a ⊡			ｵ				ん						{![9!.[9		わゐ ゑれ図わ図	わゐ ゑれ図わわ

molex

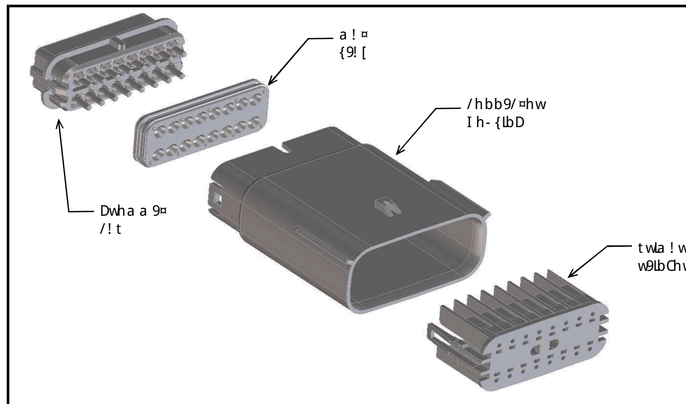

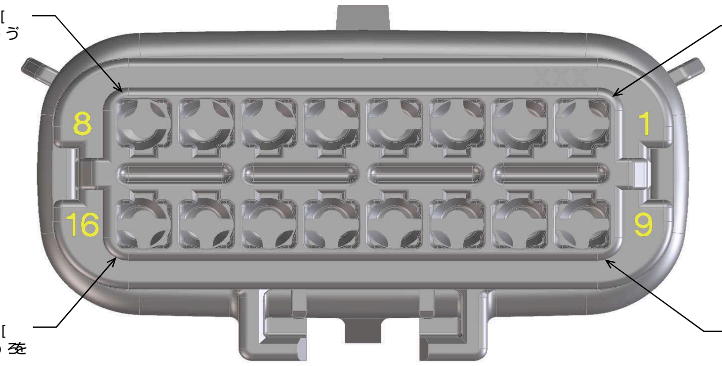

Chw! 55L¤lhb! [lbChwa ! ¤lhb {99 {5[illegible]

! . . w9¹ L! ¤lhb	59{/wLt¤lhb	/h[hw	a ! ¤9wL! [
! ⊡[Y	I h- {lbD☞Y9ÐlbD ht¤lhb !	. [! /Y	{t{ 些Ð[hb DC≉
. ⁅D	I h- {lbD☞Y9ÐlbD ht¤lhb .	[lDI ¤DwL£	{t{ 些Ð[hb DC≉
/ ⊡w	I h- {lbD☞Y9ÐlbD ht¤lhb /	. wh° b	{t{ 些Ð[hb DC≉
5 ⁅Dw	I h- {lbD☞Y9ÐlbD ht¤lhb 5	Dw99b	{t{ 些Ð[hb DC≉
/ ⁅5D	I h- {lbD☞Y9ÐlbD ht¤lhb /	5! wY DwL£	{t{ 些Ð[hb DC≉
5 ⁅{D	I h- {lbD☞Y9ÐlbD ht¤lhb 5	{¤hb9 DwL£	{t{ 些Ð[hb DC≉
! ⁅Ð°	I h- {lbD☞Y9ÐlbD ht¤lhb !	Ð9[[h°	{t{ 些Ð[hb DC≉
D/t	Dwha a 9¤/! t t[- DD95、	. [! /Y	{t{ 些Ð[hb DC≉
t[w	t[w	b! ¤- wL[	{t{ 些Ð[hb DC≉
a ⊠	a ! ¤{9! [	w- {¤w95	lbI 9w9b¤[Ð[- . wL/! ¤95 {L[L/hb9
a ⊡	a ! ¤{9! [	whÐ! [. [- 9	lbI 9w9b¤[Ð[- . wL/! ¤95 {L[L/hb9

! {{9a . [Ð59{/wLt¤lhb	! {{9a . [Ðt! w¤ b- a . 9w	/ha thb9b¤ — ¤I 9tw9{9b/9hC! b! . . w9¹ L! ¤lhb lb5L/! ¤9{ ¤I 9 tw9{9b/9hC¤I ! ¤/ha thb9b¤				. [h/Y95 ¤9wa lb! [{ — /! ¹ L¤Ð° L¤I ! b- a . 9wlb5L/! ¤9{ . [h/Y95 ¤9wa lb! [th{L¤lhb /! ¹ L¤Ð° L¤I h- ¤! b- a . 9wlb5L/! ¤9{ ht9b ¤9wa lb! [th{L¤lhb																{¤! ¤- {	/ha a 9b¤{	ht¤lhb! [! ¤¤! ¤/I a 9b¤{ {h[5 {9t9wL ¤9[Ð			
		I h- {lbD Y9Ð/¥h[hw	Dwha a 9¤ /! t	t[w	a ! ¤{9! [	ろ	ゎ	わ	ゐ	ゑ	を	ん	ゔ	゛	ろれ	ろろ	ろゎ	ろわ	ろゐ	ろゑ	ろを			. ! /Y{I 9[[° L¤I wL {	. ! /Y{I 9[[° L¤I h- ¤wL {	れ! 5! t¤hw° L¤I wL {	れ! 5! t¤hw° L¤I h- ¤ wL {
Y9Ð! ☞[! /Y	[illegible]	! ⊡[Y	D/t	t[w	a ⊠																	t[! bb95 h. {h[9{/9b/9	{99 [illegible]	[illegible]	[illegible]	[illegible]	[illegible]
Y9Ð. ☞[lDI ¤DwL£	[illegible]	. ⁅D	D/t	t[w	a ⊠																	t[! bb95 h. {h[9{/9b/9	{99 [illegible]	[illegible]	[illegible]	[illegible]	[illegible]
Y9Ð/☞wh° b	[illegible]	/ ⊡w	D/t	t[w	a ⊠																	t[! bb95 h. {h[9{/9b/9	{99 [illegible]	[illegible]	[illegible]	[illegible]	[illegible]
Y9Ð5☞Dw99b	[illegible]	5 ⁅Dw	D/t	t[w	a ⊠																	t[! bb95 h. {h[9{/9b/9	{99 [illegible]	[illegible]	[illegible]	[illegible]	[illegible]
¹ hl5 Y9£	[illegible]																										
Y9Ð! ☞[! /Y	[illegible]	! ⊡[Y	D/t	t[w	a ⊠								ǐ									t[! bb95 h. {h[9{/9b/9	{99 [illegible]	[illegible]	[illegible]	[illegible]	[illegible]
Y9Ð. ☞[lDI ¤DwL£	[illegible]	. ⁅D	D/t	t[w	a ⊠								ǐ									t[! bb95 h. {h[9{/9b/9	{99 [illegible]	[illegible]	[illegible]	[illegible]	[illegible]
Y9Ð/☞wh° b	[illegible]	/ ⊡w	D/t	t[w	a ⊠								ǐ									t[! bb95 h. {h[9{/9b/9	{99 [illegible]	[illegible]	[illegible]	[illegible]	[illegible]
Y9Ð5☞Dw99b	[illegible]	5 ⁅Dw	D/t	t[w	a ⊠								ǐ									t[! bb95 h. {h[9{/9b/9	{99 [illegible]	[illegible]	[illegible]	[illegible]	[illegible]
¹ hl5 Y9£	[illegible]																										
Y9Ð! ☞[! /Y	[illegible]	! ⊡[Y	D/t	t[w	a ⊠								ǐ									t[! bb95 h. {h[9{/9b/9	{99 [illegible]	[illegible]	[illegible]	[illegible]	[illegible]
Y9Ð. ☞[lDI ¤DwL£	[illegible]	. ⁅D	D/t	t[w	a ⊠								ǐ									t[! bb95 h. {h[9{/9b/9	{99 [illegible]	[illegible]	[illegible]	[illegible]	[illegible]
Y9Ð/☞wh° b	[illegible]	/ ⊡w	D/t	t[w	a ⊠								ǐ									t[! bb95 h. {h[9{/9b/9	{99 [illegible]	[illegible]	[illegible]	[illegible]	[illegible]
Y9Ð5☞Dw99b	[illegible]	5 ⁅Dw	D/t	t[w	a ⊠								ǐ									t[! bb95 h. {h[9{/9b/9	{99 [illegible]	[illegible]	[illegible]	[illegible]	[illegible]
¹ hl5 Y9£	[illegible]																										
Y9Ð! ☞[! /Y	[illegible]	! ⊡[Y	D/t	t[w	a ⊠	ƻ							ǐ									t[! bb95 h. {h[9{/9b/9	{99 [illegible]	[illegible]	[illegible]	[illegible]	[illegible]
Y9Ð. ☞[lDI ¤DwL£	[illegible]	. ⁅D	D/t	t[w	a ⊠	ƻ							ǐ									t[! bb95 h. {h[9{/9b/9	{99 [illegible]	[illegible]	[illegible]	[illegible]	[illegible]
Y9Ð/☞wh° b	[illegible]	/ ⊡w	D/t	t[w	a ⊠	ƻ							ǐ									t[! bb95 h. {h[9{/9b/9	{99 [illegible]	[illegible]	[illegible]	[illegible]	[illegible]
Y9Ð5☞Dw99b	[illegible]	5 ⁅Dw	D/t	t[w	a ⊠	ƻ							ǐ									t[! bb95 h. {h[9{/9b/9	{99 [illegible]	[illegible]	[illegible]	[illegible]	[illegible]
¹ hl5 Y9£	[illegible]																										
Y9Ð! ☞[! /Y	[illegible]	! ⊡[Y	D/t	t[w	a ⊠	ƻ	ł	ł	∂	ゑ	ぇ	ん	ǐ		ろł	ろよ	ろł	ろł	ろ∂	ろゑ	ろぇ	t[! bb95 h. {h[9{/9b/9	{99 [illegible]	[illegible]	[illegible]	[illegible]	[illegible]
Y9Ð. ☞[lDI ¤DwL£	[illegible]	. ⁅D	D/t	t[w	a ⊠	ƻ	ł	ł	∂	ゑ	ぇ	ん	ǐ		ろł	ろよ	ろł	ろł	ろ∂	ろゑ	ろぇ	t[! bb95 h. {h[9{/9b/9	{99 [illegible]	[illegible]	[illegible]	[illegible]	[illegible]
Y9Ð/☞wh° b	[illegible]	/ ⊡w	D/t	t[w	a ⊠	ƻ	ł	ł	∂	ゑ	ぇ	ん	ǐ		ろł	ろよ	ろł	ろł	ろ∂	ろゑ	ろぇ	t[! bb95 h. {h[9{/9b/9	{99 [illegible]	[illegible]	[illegible]	[illegible]	[illegible]
Y9Ð5☞Dw99b	[illegible]	5 ⁅Dw	D/t	t[w	a ⊠	ƻ	ł	ł	∂	ゑ	ぇ	ん	ǐ		ろł	ろよ	ろł	ろł	ろ∂	ろゑ	ろぇ	t[! bb95 h. {h[9{/9b/9	{99 [illegible]	[illegible]	[illegible]	[illegible]	[illegible]
¹ hl5 Y9£	[illegible]																										
Y9Ð! ☞[! /Y	[illegible]	! ⊡[Y	D/t	t[w	a ⊠															ろゑ		t[! bb95 h. {h[9{/9b/9	{99 [illegible]	[illegible]	[illegible]	[illegible]	[illegible]
Y9Ð! ☞[! /Y	[illegible]	! ⊡[Y	D/t	t[w	a ⊠	ƻ							ǐ								ろぇ	t[! bb95 h. {h[9{/9b/9	{99 [illegible]	[illegible]	[illegible]	[illegible]	[illegible]
Y9Ð. ☞[lDI ¤DwL£	[illegible]	. ⁅D	D/t	t[w	a ⊠	ƻ							ǐ								ろぇ	t[! bb95 h. {h[9{/9b/9	{99 [illegible]	[illegible]	[illegible]	[illegible]	[illegible]
Y9Ð/☞wh° b	[illegible]	/ ⊡w	D/t	t[w	a ⊠	ƻ							ǐ								ろぇ	t[! bb95 h. {h[9{/9b/9	{99 [illegible]	[illegible]	[illegible]	[illegible]	[illegible]
Y9Ð5☞Dw99b	[illegible]	5 ⁅Dw	D/t	t[w	a ⊠	ƻ							ǐ								ろぇ	t[! bb95 h. {h[9{/9b/9	{99 [illegible]	[illegible]	[illegible]	[illegible]	[illegible]
¹ hl5 Y9£	[illegible]																										

! {{9a . [Ð59{/wLt¤lhb	! {{9a . [Ðt! w¤ b- a . 9w	I h- {lbD Y9Ð/¥h[hw	Dwha a 9¤ /! t	t[w	a ! ¤{9! [	ろ	ゎ	わ	ゐ	ゑ	を	ん	ゔ	゛	ろれ	ろろ	ろゎ	ろわ	ろゐ	ろゑ	ろを	{¤! ¤- {	/ha a 9b¤{	. ! /Y{I 9[[° L¤I wL {	. ! /Y{I 9[[° L¤I h- ¤wL {	れ! 5! t¤hw° L¤I wL {	れ! 5! t¤hw° L¤I h- ¤ wL {
Y9Ð! ☞[! /Y	[illegible]	! ⊡[Y	D/t	t[w	a ⊠				∂			ん	ǐ				ろł	ろł	ろ∂			t[! bb95 h. {h[9{/9b/9	{99 [illegible]	[illegible]	[illegible]	[illegible]	[illegible]
Y9Ð! ☞[! /Y	[illegible]	! ⊡[Y	D/t	t[w	a ⊠			ł	∂	ゑ					ろł	ろよ	ろł	ろł	ろ∂	ろゑ	ろぇ	t[! bb95 h. {h[9{/9b/9	{99 [illegible]	[illegible]	[illegible]	[illegible]	[illegible]
Y9Ð! ☞[! /Y	[illegible]	! ⊡[Y	D/t	t[w	a ⊠							ん	ǐ				ろł	ろł	ろ∂			t[! bb95 h. {h[9{/9b/9	{99 [illegible]	[illegible]	[illegible]	[illegible]	[illegible]
Y9Ð. ☞[lDI ¤DwL£	[illegible]	. ⁅D	D/t	t[w	a ⊠								ǐ					ろł	ろ∂	ろゑ	ろぇ	t[! bb95 h. {h[9{/9b/9	{99 [illegible]	[illegible]	[illegible]	[illegible]	[illegible]
Y9Ð! ☞[! /Y	[illegible]	! ⊡[Y	D/t	t[w	a ⊠										ろł	ろよ		ろł	ろ∂	ろゑ	ろぇ	t[! bb95 h. {h[9{/9b/9	{99 [illegible]	[illegible]	[illegible]	[illegible]	[illegible]
Y9Ð! ☞[! /Y	[illegible]	! ⊡[Y	D/t	t[w	a ⊠										ろł	ろよ				ろゑ	ろぇ	t[! bb95 h. {h[9{/9b/9	{99 [illegible]	[illegible]	[illegible]	[illegible]	[illegible]
Y9Ð! ☞[! /Y	[illegible]	! ⊡[Y	D/t	t[w	a ⊠								ǐ		ろł	ろよ	ろł			ろゑ	ろぇ	t[! bb95 h. {h[9{/9b/9	{99 [illegible]	[illegible]	[illegible]	[illegible]	[illegible]
Y9Ð! ☞[! /Y	[illegible]	! ⊡[Y	D/t	t[w	a ⊠															ろゑ		t[! bb95 h. {h[9{/9b/9	{99 [illegible]	[illegible]	[illegible]	[illegible]	[illegible]
Y9Ð! ☞[! /Y	[illegible]	! ⊡[Y	D/t	t[w	a ⊠					ゑ											ろぇ	t[! bb95 h. {h[9{/9b/9	{99 [illegible]	[illegible]	[illegible]	[illegible]	[illegible]
Y9Ð! ☞[! /Y	[illegible]	! ⊡[Y	D/t	t[w	a ⊠					ゑ												t[! bb95 h. {h[9{/9b/9	{99 [illegible]	[illegible]	[illegible]	[illegible]	[illegible]
Y9Ð. ☞[lDI ¤DwL£	[illegible]	. ⁅D	D/t	t[w	a ⊠				∂		ぇ	ん	ǐ				ろł		ろ∂			t[! bb95 h. {h[9{/9b/9	{99 [illegible]	[illegible]	[illegible]	[illegible]	[illegible]
Y9Ð! ☞[! /Y	[illegible]	! ⊡[Y	D/t	t[w	a ⊠															ろゑ	ろぇ	t[! bb95 h. {h[9{/9b/9	{99 [illegible]	[illegible]	[illegible]	[illegible]	[illegible]
Y9Ð. ☞[lDI ¤DwL£	[illegible]	. ⁅D	D/t	t[w	a ⊠				∂													t[! bb95 h. {h[9{/9b/9	{99 [illegible]	[illegible]	[illegible]	[illegible]	[illegible]
Y9Ð. ☞[lDI ¤DwL£	[illegible]	. ⁅D	D/t	t[w	a ⊠				∂		ぇ	ん	ǐ									t[! bb95 h. {h[9{/9b/9	{99 [illegible]	[illegible]	[illegible]	[illegible]	[illegible]
Y9Ð! ☞[! /Y	[illegible]	! ⊡[Y	D/t	t[w	a ⊠				∂		ぇ	ん	ǐ				ろł					t[! bb95 h. {h[9{/9b/9	{99 [illegible]	[illegible]	[illegible]	[illegible]	[illegible]
Y9Ð! ☞[! /Y	[illegible]	! ⊡[Y	D/t	t[w	a ⊠																ろぇ	t[! bb95 h. {h[9{/9b/9	{99 [illegible]	[illegible]	[illegible]	[illegible]	[illegible]
Y9Ð! ☞[! /Y	[illegible]	! ⊡[Y	D/t	t[w	a ⊠				∂								ろł					t[! bb95 h. {h[9{/9b/9	{99 [illegible]	[illegible]	[illegible]	[illegible]	[illegible]
Y9Ð. ☞[lDI ¤DwL£	[illegible]	. ⁅D	D/t	t[w	a ⊠																ろぇ	t[! bb95 h. {h[9{/9b/9	{99 [illegible]	[illegible]	[illegible]	[illegible]	[illegible]
Y9Ð. ☞[lDI ¤DwL£	[illegible]	. ⁅D	D/t	t[w	a ⊠				∂								ろł		ろ∂			t[! bb95 h. {h[9{/9b/9	{99 [illegible]	[illegible]	[illegible]	[illegible]	[illegible]
Y9Ð. ☞[lDI ¤DwL£	[illegible]	. ⁅D	D/t	t[w	a ⊠														ろ∂			t[! bb95 h. {h[9{/9b/9	{99 [illegible]	[illegible]	[illegible]	[illegible]	[illegible]
Y9Ð. ☞[lDI ¤DwL£	[illegible]	. ⁅D	D/t	t[w	a ⊠						ぇ	ん	ǐ						ろ∂			t[! bb95 h. {h[9{/9b/9	{99 [illegible]	[illegible]	[illegible]	[illegible]	[illegible]
Y9Ð! ☞[! /Y	[illegible]	! ⊡[Y	D/t	t[w	a ⊠															ろゑ		t[! bb95 h. {h[9{/9b/9	{99 [illegible]	[illegible]	[illegible]	[illegible]	[illegible]
Y9Ð! ☞[! /Y	[illegible]	! ⊡[Y	D/t	t[w	a ⊠				∂				ǐ				ろł					t[! bb95 h. {h[9{/9b/9	{99 [illegible]	[illegible]	[illegible]	[illegible]	[illegible]
Y9Ð. ☞[lDI ¤DwL£	[illegible]	. ⁅D	D/t	t[w	a ⊠				∂				ǐ				ろł		ろ∂			t[! bb95 h. {h[9{/9b/9	{99 [illegible]	[illegible]	[illegible]	[illegible]	[illegible]
Y9Ð. ☞[lDI ¤DwL£	[illegible]	. ⁅D	D/t	t[w	a ⊠								ǐ						ろ∂			t[! bb95 h. {h[9{/9b/9	{99 [illegible]	[illegible]	[illegible]	[illegible]	[illegible]
Y9Ð! ☞[! /Y	[illegible]	! ⊡[Y	D/t	t[w	a ⊠	ƻ						ん										t[! bb95 h. {h[9{/9b/9	{99 [illegible]	[illegible]	[illegible]	[illegible]	[illegible]
Y9Ð. ☞[lDI ¤DwL£	[illegible]	. ⁅D	D/t	t[w	a ⊠		ł		∂		ぇ	ん	ǐ				ろł		ろ∂			t[! bb95 h. {h[9{/9b/9	{99 [illegible]	[illegible]	[illegible]	[illegible]	[illegible]
Y9Ð. ☞[lDI ¤DwL£	[illegible]	. ⁅D	D/t	t[w	a ⊠		ł				ぇ	ん	ǐ						ろ∂			t[! bb95 h. {h[9{/9b/9	{99 [illegible]	[illegible]	[illegible]	[illegible]	[illegible]
Y9Ð. ☞[lDI ¤DwL£	[illegible]	. ⁅D	D/t	t[w	a ⊠		ł						ǐ						ろ∂			t[! bb95 h. {h[9{/9b/9	{99 [illegible]	[illegible]	[illegible]	[illegible]	[illegible]
Y9Ð! ☞[! /Y	[illegible]	! ⊡[Y	D/t	t[w	a ⊠		ł		∂				ǐ				ろł					t[! bb95 h. {h[9{/9b/9	{99 [illegible]	[illegible]	[illegible]	[illegible]	[illegible]
Y9Ð. ☞[lDI ¤DwL£	[illegible]	. ⁅D	D/t	t[w	a ⊠		ł		∂				ǐ				ろł		ろ∂			t[! bb95 h. {h[9{/9b/9	{99 [illegible]	[illegible]	[illegible]	[illegible]	[illegible]
Y9Ð! ☞[! /Y	[illegible]	! ⊡[Y	D/t	t[w	a ⊠		ł						ǐ									t[! bb95 h. {h[9{/9b/9	{99 [illegible]	[illegible]	[illegible]	[illegible]	[illegible]
Y9Ð! ☞[! /Y	[illegible]	! ⊡[Y	D/t	t[w	a ⊠			ł					ǐ		ろł	ろよ				ろゑ	ろぇ	t[! bb95 h. {h[9{/9b/9	{99 [illegible]	[illegible]	[illegible]	[illegible]	[illegible]
Y9Ð! ☞[! /Y	[illegible]	! ⊡[Y	D/t	t[w	a ⊠			ł	∂	ゑ	ぇ	ん	ǐ		ろł	ろよ				ろゑ	ろぇ	t[! bb95 h. {h[9{/9b/9	{99 [illegible]	[illegible]	[illegible]	[illegible]	[illegible]
Y9Ð! ☞[! /Y	[illegible]	! ⊡[Y	D/t	t[w	a ⊠		ł				ぇ	ん	ǐ		ろł			ろł	ろ∂	ろゑ	ろぇ	t[! bb95 h. {h[9{/9b/9	{99 [illegible]	[illegible]	[illegible]	[illegible]	[illegible]
Y9Ð! ☞[! /Y	[illegible]	! ⊡[Y	D/t	t[w	a ⊠		ł			ゑ	ぇ				ろł			ろł	ろ∂	ろゑ	ろぇ	t[! bb95 h. {h[9{/9b/9	{99 [illegible]	[illegible]	[illegible]	[illegible]	[illegible]
Y9Ð! ☞[! /Y	[illegible]	! ⊡[Y	D/t	t[w	a ⊠		ł			ゑ	ぇ				ろł	ろよ		ろł	ろ∂	ろゑ	ろぇ	t[! bb95 h. {h[9{/9b/9	{99 [illegible]	[illegible]	[illegible]	[illegible]	[illegible]

! {{9a . [Ð59{/wĿt¤Ŀhb	! {{9a . [Ðt! w¤ b- a . 9w	/ha thb9b¤				. [h/Y95 ¤9wa Ŀb! [{																{¤! ¤- {	/ha a 9b¤{	ht¤Ŀhb! [! ¤¤! ¤/I a 9b¤{ {h[5 {9t9w! ¤9[Ð			
		¤I 9tw9{9b/9hC! b! . . w9¹ Ŀ! ¤Ŀhb Ŀb5Ŀ/! ¤9{ ¤I 9 tw9{9b/9hC¤I ! ¤/ha thb9b¤				/! ¹ Ŀ¤Ð° Ŀ¤I ! b- a . 9wĿb5Ŀ/! ¤9{ . [h/Y95 ¤9wa Ŀb! [th{Ŀ¤Ŀhb /! ¹ Ŀ¤Ð° Ŀ¤I h- ¤! b- a . 9wĿb5Ŀ/! ¤9{ ht9b ¤9wa Ŀb! [th{Ŀ¤Ŀhb																					
		I h- {ĿbD Y9Ð Ŀh[hw	Dwha a 9¤ /! t	t[w	a ! ¤{9! [	ろ	ゎ	わ	ゐ	ゑ	を	ん	ゔ	゛	3れ	3ろ	3ゎ	3わ	3ゐ	3ゑ	3を			. ! /Y{I 9[[° Ŀ¤I wĿ {	. ! /Y{I 9[[° Ŀ¤I h- ¤wĿ {	れ! 5! t¤hw° Ŀ¤I wĿ {	れ! 5! t¤hw° Ŀ¤I h- ¤ wĿ {
Y9Ð! ☞[! /Y	[illegible]	! ⊡[Y	D/t	t[w	a ⊠		ｫ				ﾓ				3ｵ			3ﾜ	3∂			t[! bb95 h. {h[9{/9b/9	{99 [illegible]	[illegible]	[illegible]	[illegible]	[illegible]
Y9Ð! ☞[! /Y	[illegible]	! ⊡[Y	D/t	t[w	a ⊠		ｫ		∂	ﾇ	ﾓ	ﾊ	ﾐ		3ｵ	3ﾆ	3ｫ	3ﾜ	3∂			t[! bb95 h. {h[9{/9b/9	{99 [illegible]	[illegible]	[illegible]	[illegible]	[illegible]
Y9Ð! ☞[! /Y	[illegible]	! ⊡[Y	D/t	t[w	a ⊠		ｫ		∂	ﾇ	ﾓ				3ｵ		3ｫ	3ﾜ	3∂			t[! bb95 h. {h[9{/9b/9	{99 [illegible]	[illegible]	[illegible]	[illegible]	[illegible]
Y9Ð! ☞[! /Y	[illegible]	! ⊡[Y	D/t	t[w	a ⊠				∂				ﾐ									t[! bb95 h. {h[9{/9b/9	{99 [illegible]	[illegible]	[illegible]	[illegible]	[illegible]
Y9Ð! ☞[! /Y	[illegible]	! ⊡[Y	D/t	t[w	a ⊠		ｫ				ﾓ	ﾊ	ﾐ									t[! bb95 h. {h[9{/9b/9	{99 [illegible]	[illegible]	[illegible]	[illegible]	[illegible]
Y9Ð! ☞[! /Y	[illegible]	! ⊡[Y	D/t	t[w	a ⊠		ｫ			ﾇ	ﾓ											t[! bb95 h. {h[9{/9b/9	{99 [illegible]	[illegible]	[illegible]	[illegible]	[illegible]
Y9Ð! ☞[! /Y	[illegible]	! ⊡[Y	D/t	t[w	a ⊠		ｫ			ﾇ	ﾓ					3ﾆ						t[! bb95 h. {h[9{/9b/9	{99 [illegible]	[illegible]	[illegible]	[illegible]	[illegible]
Y9Ð! ☞[! /Y	[illegible]	! ⊡[Y	D/t	t[w	a ⊠					ﾇ	ﾓ	ﾊ	ﾐ					3ﾜ				t[! bb95 h. {h[9{/9b/9	{99 [illegible]	[illegible]	[illegible]	[illegible]	[illegible]
Y9Ð! ☞[! /Y	[illegible]	! ⊡[Y	D/t	t[w	a ⊠					ﾇ	ﾓ	ﾊ	ﾐ			3ﾆ		3ﾜ				t[! bb95 h. {h[9{/9b/9	{99 [illegible]	[illegible]	[illegible]	[illegible]	[illegible]
Y9Ð! ☞[! /Y	[illegible]	! ⊡[Y	D/t	t[w	a ⊠					ﾇ	ﾓ	ﾊ	ﾐ				3ｫ	3ﾜ	3∂			t[! bb95 h. {h[9{/9b/9	{99 [illegible]	[illegible]	[illegible]	[illegible]	[illegible]
Y9Ð! ☞[! /Y	[illegible]	! ⊡[Y	D/t	t[w	a ⊠					ﾇ	ﾓ	ﾊ	ﾐ			3ﾆ	3ｫ	3ﾜ	3∂			t[! bb95 h. {h[9{/9b/9	{99 [illegible]	[illegible]	[illegible]	[illegible]	[illegible]
Y9Ð! ☞[! /Y	[illegible]	! ⊡[Y	D/t	t[w	a ⊠					ﾇ	ﾓ	ﾊ	ﾐ			3ﾆ	3ｫ	3ﾜ	3∂	3ﾇ		t[! bb95 h. {h[9{/9b/9	{99 [illegible]	[illegible]	[illegible]	[illegible]	[illegible]
Y9Ð! ☞[! /Y	[illegible]	! ⊡[Y	D/t	t[w	a ⊠							ﾊ								3ﾇ		t[! bb95 h. {h[9{/9b/9	{99 [illegible]	[illegible]	[illegible]	[illegible]	[illegible]
Y9Ð! ☞[! /Y	[illegible]	! ⊡[Y	D/t	t[w	a ⊠				∂	ﾇ	ﾓ									3ﾇ	3ﾓ	t[! bb95 h. {h[9{/9b/9	{99 [illegible]	[illegible]	[illegible]	[illegible]	[illegible]
Y9Ð! ☞[! /Y	[illegible]	! ⊡[Y	D/t	t[w	a ⊠			ｵ	∂	ﾇ	ﾓ									3ﾇ	3ﾓ	t[! bb95 h. {h[9{/9b/9	{99 [illegible]	[illegible]	[illegible]	[illegible]	[illegible]
Y9Ð! ☞[! /Y	[illegible]	! ⊡[Y	D/t	t[w	a ⊠	ﾆ	ｫ	ｵ	∂	ﾇ	ﾓ		ﾐ					3ﾜ		3ﾇ	3ﾓ	t[! bb95 h. {h[9{/9b/9	{99 [illegible]	[illegible]	[illegible]	[illegible]	[illegible]
Y9Ð! ☞[! /Y	[illegible]	! ⊡[Y	D/t	t[w	a ⊠													3ﾜ	3∂	3ﾇ	3ﾓ	t[! bb95 h. {h[9{/9b/9	{99 [illegible]	[illegible]	[illegible]	[illegible]	[illegible]
Y9Ð! ☞[! /Y	[illegible]	! ⊡[Y	D/t	t[w	a ⊠								ﾐ					3ﾜ	3∂	3ﾇ	3ﾓ	t[! bb95 h. {h[9{/9b/9	{99 [illegible]	[illegible]	[illegible]	[illegible]	[illegible]
Y9Ð! ☞[! /Y	[illegible]	! ⊡[Y	D/t	t[w	a ⊠							ﾊ	ﾐ			3ﾆ	3ｫ	3ﾜ	3∂	3ﾇ		t[! bb95 h. {h[9{/9b/9	{99 [illegible]	[illegible]	[illegible]	[illegible]	[illegible]
Y9Ð! ☞[! /Y	[illegible]	! ⊡[Y	D/t	t[w	a ⊠							ﾊ	ﾐ				3ｫ	3ﾜ	3∂	3ﾇ		t[! bb95 h. {h[9{/9b/9	{99 [illegible]	[illegible]	[illegible]	[illegible]	[illegible]
Y9Ð! ☞[! /Y	[illegible]	! ⊡[Y	D/t	t[w	a ⊠							ﾊ	ﾐ			3ﾆ		3ﾜ				t[! bb95 h. {h[9{/9b/9	{99 [illegible]	[illegible]	[illegible]	[illegible]	[illegible]
Y9Ð! ☞[! /Y	[illegible]	! ⊡[Y	D/t	t[w	a ⊠							ﾊ	ﾐ					3ﾜ				t[! bb95 h. {h[9{/9b/9	{99 [illegible]	[illegible]	[illegible]	[illegible]	[illegible]
Y9Ð! ☞[! /Y	[illegible]	! ⊡[Y	D/t	t[w	a ⊠					ﾇ								3ﾜ				t[! bb95 h. {h[9{/9b/9	{99 [illegible]	[illegible]	[illegible]	[illegible]	[illegible]
Y9Ð! ☞[! /Y	[illegible]	! ⊡[Y	D/t	t[w	a ⊠		ｫ								3ｵ					3ﾇ	3ﾓ	t[! bb95 h. {h[9{/9b/9	{99 [illegible]	[illegible]	[illegible]	[illegible]	[illegible]
Y9Ð! ☞[! /Y	[illegible]	! ⊡[Y	D/t	t[w	a ⊠		ｫ								3ｵ					3ﾇ		t[! bb95 h. {h[9{/9b/9	{99 [illegible]	[illegible]	[illegible]	[illegible]	[illegible]
Y9Ð! ☞[! /Y	[illegible]	! ⊡[Y	D/t	t[w	a ⊠		ｫ			ﾇ	ﾓ	ﾊ	ﾐ		3ｵ		3ｫ		3∂	3ﾇ	3ﾓ	t[! bb95 h. {h[9{/9b/9	{99 [illegible]	[illegible]	[illegible]	[illegible]	[illegible]
Y9Ð! ☞[! /Y	[illegible]	! ⊡[Y	D/t	t[w	a ⊠		ｫ			ﾇ	ﾓ	ﾊ	ﾐ		3ｵ		3ｫ		3∂	3ﾇ		t[! bb95 h. {h[9{/9b/9	{99 [illegible]	[illegible]	[illegible]	[illegible]	[illegible]
Y9Ð! ☞[! /Y	[illegible]	! ⊡[Y	D/t	t[w	a ⊠	ﾆ	ｫ	ｵ	∂	ﾇ	ﾓ				3ｵ	3ﾆ	3ｫ	3ﾜ	3∂	3ﾇ	3ﾓ	t[! bb95 h. {h[9{/9b/9	{99 [illegible]	[illegible]	[illegible]	[illegible]	[illegible]
Y9Ð! ☞[! /Y	[illegible]	! ⊡[Y	D/t	t[w	a ⊠	ﾆ	ｫ	ｵ	∂	ﾇ	ﾓ					3ﾆ	3ｫ	3ﾜ	3∂	3ﾇ	3ﾓ	t[! bb95 h. {h[9{/9b/9	{99 [illegible]	[illegible]	[illegible]	[illegible]	[illegible]
Y9Ð! ☞[! /Y	[illegible]	! ⊡[Y	D/t	t[w	a ⊠							ﾊ	ﾐ		3ｵ	3ﾆ	3ｫ	3ﾜ	3∂	3ﾇ	3ﾓ	t[! bb95 h. {h[9{/9b/9	{99 [illegible]	[illegible]	[illegible]	[illegible]	[illegible]
Y9Ð! ☞[! /Y	[illegible]	! ⊡[Y	D/t	t[w	a ⊠								ﾐ		3ｵ	3ﾆ	3ｫ	3ﾜ	3∂	3ﾇ	3ﾓ	t[! bb95 h. {h[9{/9b/9	{99 [illegible]	[illegible]	[illegible]	[illegible]	[illegible]
Y9Ð! ☞[! /Y	[illegible]	! ⊡[Y	D/t	t[w	a ⊠	ﾆ	ｫ	ｵ	∂	ﾇ	ﾓ								3∂	3ﾇ	3ﾓ	t[! bb95 h. {h[9{/9b/9	{99 [illegible]	[illegible]	[illegible]	[illegible]	[illegible]
Y9Ð! ☞[! /Y	[illegible]	! ⊡[Y	D/t	t[w	a ⊠										3ｵ	3ﾆ	3ｫ	3ﾜ	3∂	3ﾇ	3ﾓ	t[! bb95 h. {h[9{/9b/9	{99 [illegible]	[illegible]	[illegible]	[illegible]	[illegible]
Y9Ð! ☞[! /Y	[illegible]	! ⊡[Y	D/t	t[w	a ⊠											3ﾆ	3ｫ	3ﾜ	3∂	3ﾇ	3ﾓ	t[! bb95 h. {h[9{/9b/9	{99 [illegible]	[illegible]	[illegible]	[illegible]	[illegible]
Y9Ð! ☞[! /Y	[illegible]	! ⊡[Y	D/t	t[w	a ⊠							ﾊ	ﾐ		3ｵ							t[! bb95 h. {h[9{/9b/9	{99 [illegible]	[illegible]	[illegible]	[illegible]	[illegible]
Y9Ð! ☞[! /Y	[illegible]	! ⊡[Y	D/t	t[w	a ⊠														3∂	3ﾇ	3ﾓ	t[! bb95 h. {h[9{/9b/9	{99 [illegible]	[illegible]	[illegible]	[illegible]	[illegible]
Y9Ð! ☞[! /Y	[illegible]	! ⊡[Y	D/t	t[w	a ⊠												3ｫ	3ﾜ	3∂	3ﾇ	3ﾓ	t[! bb95 h. {h[9{/9b/9	{99 [illegible]	[illegible]	[illegible]	[illegible]	[illegible]
Y9Ð! ☞[! /Y	[illegible]	! ⊡[Y	D/t	t[w	a ⊠	ﾆ	ｫ	ｵ	∂	ﾇ	ﾓ	ﾊ	ﾐ		3ｵ							t[! bb95 h. {h[9{/9b/9	{99 [illegible]	[illegible]	[illegible]	[illegible]	[illegible]
Y9Ð. ☞[ĿDI ¤ Dw! Ɛ	[illegible]	. ⊡D	D/t	t[w	a ⊠	ﾆ	ｫ	ｵ	∂	ﾇ	ﾓ	ﾊ	ﾐ		3ｵ		3ｫ		3∂	3ﾇ	3ﾓ	t[! bb95 h. {h[9{/9b/9	{99 [illegible]	[illegible]	[illegible]	[illegible]	[illegible]
Y9Ð. ☞[ĿDI ¤ Dw! Ɛ	[illegible]	. ⊡D	D/t	t[w	a ⊠	ﾆ	ｫ	ｵ	∂		ﾓ	ﾊ	ﾐ		3ｵ		3ｫ		3∂	3ﾇ		t[! bb95 h. {h[9{/9b/9	{99 [illegible]	[illegible]	[illegible]	[illegible]	[illegible]
Y9Ð! ☞[! /Y	[illegible]	! ⊡[Y	D/t	t[w	a ⊠		ｫ	ｵ	∂						3ｵ					3ﾇ	3ﾓ	t[! bb95 h. {h[9{/9b/9	{99 [illegible]	[illegible]	[illegible]	[illegible]	[illegible]
Y9Ð! ☞[! /Y	[illegible]	! ⊡[Y	D/t	t[w	a ⊠		ｫ	ｵ	∂	ﾇ	ﾓ	ﾊ	ﾐ		3ｵ		3ｫ		3∂	3ﾇ	3ﾓ	t[! bb95 h. {h[9{/9b/9	{99 [illegible]	[illegible]	[illegible]	[illegible]	[illegible]
Y9Ð! ☞[! /Y	[illegible]	! ⊡[Y	D/t	t[w	a ⊠	ﾆ	ｫ	ｵ	∂			ﾊ	ﾐ		3ｵ	3ﾆ	3ｫ			3ﾇ	3ﾓ	t[! bb95 h. {h[9{/9b/9	{99 [illegible]	[illegible]	[illegible]	[illegible]	[illegible]
Y9Ð! ☞[! /Y	[illegible]	! ⊡[Y	D/t	t[w	a ⊠	ﾆ	ｫ	ｵ	∂				ﾐ		3ｵ	3ﾆ	3ｫ				3ﾓ	t[! bb95 h. {h[9{/9b/9	{99 [illegible]	[illegible]	[illegible]	[illegible]	[illegible]
Y9Ð! ☞[! /Y	[illegible]	! ⊡[Y	D/t	t[w	a ⊠	ﾆ	ｫ	ｵ	∂	ﾇ	ﾓ	ﾊ	ﾐ					3ﾜ	3∂	3ﾇ	3ﾓ	t[! bb95 h. {h[9{/9b/9	{99 [illegible]	[illegible]	[illegible]	[illegible]	[illegible]
Y9Ð! ☞[! /Y	[illegible]	! ⊡[Y	D/t	t[w	a ⊠													3ﾜ	3∂	3ﾇ	3ﾓ	t[! bb95 h. {h[9{/9b/9	{99 [illegible]	[illegible]	[illegible]	[illegible]	[illegible]
Y9Ð! ☞[! /Y	[illegible]	! ⊡[Y	D/t	t[w	a ⊠	ﾆ				ﾇ		ﾊ	ﾐ		3ｵ	3ﾆ			3∂	3ﾇ		t[! bb95 h. {h[9{/9b/9	{99 [illegible]	[illegible]	[illegible]	[illegible]	[illegible]
Y9Ð! ☞[! /Y	[illegible]	! ⊡[Y	D/t	t[w	a ⊠												3ｫ		3∂			t[! bb95 h. {h[9{/9b/9	{99 [illegible]	[illegible]	[illegible]	[illegible]	[illegible]
Y9Ð. ☞[ĿDI ¤ Dw! Ɛ	[illegible]	. ⊡D	D/t	t[w	a ⊠				∂		ﾓ	ﾊ	ﾐ			3ﾆ	3ｫ	3ﾜ	3∂			t[! bb95 h. {h[9{/9b/9	{99 [illegible]	[illegible]	[illegible]	[illegible]	[illegible]
Y9Ð. ☞[ĿDI ¤ Dw! Ɛ	[illegible]	. ⊡D	D/t	t[w	a ⊠	ﾆ	ｫ	ｵ	∂		ﾓ	ﾊ	ﾐ		3ｵ	3ﾆ	3ｫ	3ﾜ	3∂	3ﾇ		t[! bb95 h. {h[9{/9b/9	{99 [illegible]	[illegible]	[illegible]	[illegible]	[illegible]
Y9Ð! ☞[! /Y	[illegible]	! ⊡[Y	D/t	t[w	a ⊠	ﾆ	ｫ	ｵ	∂	ﾇ	ﾓ							3ﾜ	3∂	3ﾇ	3ﾓ	t[! bb95 h. {h[9{/9b/9	{99 [illegible]	[illegible]	[illegible]	[illegible]	[illegible]
Y9Ð! ☞[! /Y	[illegible]	! ⊡[Y	D/t	t[w	a ⊠														3∂	3ﾇ		t[! bb95 h. {h[9{/9b/9	{99 [illegible]	[illegible]	[illegible]	[illegible]	[illegible]
Y9Ð/ ☞5! wY Dw! Ɛ	[illegible]	/ ⊡D	D/t	t[w	a ⊠																	t[! bb95 h. {h[9{/9b/9	{99 [illegible]	[illegible]	[illegible]	[illegible]	[illegible]
Y9Ð5☞{¤hb9 Dw! Ɛ	[illegible]	5 ⊡D	D/t	t[w	a ⊠																	t[! bb95 h. {h[9{/9b/9	{99 [illegible]	[illegible]	[illegible]	[illegible]	[illegible]
Y9Ð/ ☞5! wY Dw! Ɛ	[illegible]	/ ⊡D	D/t	t[w	a ⊠	ﾆ	ｫ	ｵ	∂	ﾇ	ﾓ	ﾊ	ﾐ		3ｵ	3ﾆ	3ｫ	3ﾜ	3∂	3ﾇ	3ﾓ	t[! bb95 h. {h[9{/9b/9	{99 [illegible]	[illegible]	[illegible]	[illegible]	[illegible]
Y9Ð5☞{¤hb9 Dw! Ɛ	[illegible]	5 ⊡D	D/t	t[w	a ⊠	ﾆ	ｫ	ｵ	∂	ﾇ	ﾓ	ﾊ	ﾐ		3ｵ	3ﾆ	3ｫ	3ﾜ	3∂	3ﾇ	3ﾓ	t[! bb95 h. {h[9{/9b/9	{99 [illegible]	[illegible]	[illegible]	[illegible]	[illegible]
Y9Ð! ☞[! /Y	[illegible]	! ⊡[Y	D/t	t[w	a ⊠								ﾐ				3ｫ	3ﾜ	3∂	3ﾇ	3ﾓ	t[! bb95 h. {h[9{/9b/9	{99 [illegible]	[illegible]	[illegible]	[illegible]	[illegible]
Y9Ð! ☞[! /Y	[illegible]	! ⊡[Y	D/t	t[w	a ⊠				∂	ﾇ	ﾓ	ﾊ	ﾐ		3ｵ	3ﾆ	3ｫ	3ﾜ	3∂	3ﾇ	3ﾓ	t[! bb95 h. {h[9{/9b/9	{99 [illegible]	[illegible]	[illegible]	[illegible]	[illegible]
Y9Ð! ☞[! /Y	[illegible]	! ⊡[Y	D/t	t[w	a ⊠										3ｵ	3ﾆ	3ｫ	3ﾜ	3∂	3ﾇ	3ﾓ	t[! bb95 h. {h[9{/9b/9	{99 [illegible]	[illegible]	[illegible]	[illegible]	[illegible]
Y9Ð. ☞[ĿDI ¤ Dw! Ɛ	[illegible]	. ⊡D	D/t	t[w	a ⊠						ﾓ	ﾊ	ﾐ			3ﾆ						t[! bb95 h. {h[9{/9b/9	{99 [illegible]	[illegible]	[illegible]	[illegible]	[illegible]
Y9Ð. ☞[ĿDI ¤ Dw! Ɛ	[illegible]	. ⊡D	D/t	t[w	a ⊠	ﾆ	ｫ	ｵ	∂	ﾇ	ﾓ				3ｵ	3ﾆ	3ｫ	3ﾜ	3∂	3ﾇ	3ﾓ	t[! bb95 h. {h[9{/9b/9	{99 [illegible]	[illegible]	[illegible]	[illegible]	[illegible]
Y9Ð. ☞[ĿDI ¤ Dw! Ɛ	[illegible]	. ⊡D	D/t	t[w	a ⊠						ﾓ					3ﾆ	3ｫ	3ﾜ		3ﾇ	3ﾓ	t[! bb95 h. {h[9{/9b/9	{99 [illegible]	[illegible]	[illegible]	[illegible]	[illegible]
Y9Ð! ☞[! /Y	[illegible]	! ⊡[Y	D/t	t[w	a ⊠						ﾓ				3ｵ	3ﾆ	3ｫ	3ﾜ	3∂			t[! bb95 h. {h[9{/9b/9	{99 [illegible]	[illegible]	[illegible]	[illegible]	[illegible]
Y9Ð! ☞[! /Y	[illegible]	! ⊡[Y	D/t	t[w	a ⊠	ﾆ	ｫ	ｵ	∂	ﾇ	ﾓ							3ﾜ	3∂			t[! bb95 h. {h[9{/9b/9	{99 [illegible]	[illegible]	[illegible]	[illegible]	[illegible]
Y9Ð! ☞[! /Y	[illegible]	! ⊡[Y	D/t	t[w	a ⊠	ﾆ	ｫ	ｵ	∂	ﾇ	ﾓ				3ｵ	3ﾆ	3ｫ	3ﾜ	3∂			t[! bb95 h. {h[9{/9b/9	{99 [illegible]	[illegible]	[illegible]	[illegible]	[illegible]
Y9Ð! ☞[! /Y	[illegible]	! ⊡[Y	D/t	t[w	a ⊠	ﾆ	ｫ			ﾇ	ﾓ	ﾊ	ﾐ									t[! bb95 h. {h[9{/9b/9	{99 [illegible]	[illegible]	[illegible]	[illegible]	[illegible]
Y9Ð! ☞[! /Y	[illegible]	! ⊡[Y	D/t	t[w	a ⊠			ｵ	∂							3ﾆ	3ｫ					t[! bb95 h. {h[9{/9b/9	{99 [illegible]	[illegible]	[illegible]	[illegible]	[illegible]
Y9Ð! ☞[! /Y	[illegible]	! ⊡[Y	D/t	t[w	a ⊠													3ﾜ	3∂	3ﾇ	3ﾓ	t[! bb95 h. {h[9{/9b/9	{99 [illegible]	[illegible]	[illegible]	[illegible]	[illegible]
Y9Ð! ☞[! /Y	[illegible]	! ⊡[Y	D/t	t[w	a ⊠			ｵ	∂						3ｵ	3ﾆ	3ｫ	3ﾜ	3∂	3ﾇ	3ﾓ	t[! bb95 h. {h[9{/9b/9	{99 [illegible]	[illegible]	[illegible]	[illegible]	[illegible]
Y9Ð! ☞[! /Y	[illegible]	! ⊡[Y	D/t	t[w	a ⊠											3ﾆ	3ｫ	3ﾜ	3∂			t[! bb95 h. {h[9{/9b/9	{99 [illegible]	[illegible]	[illegible]	[illegible]	[illegible]
Y9Ð! ☞[! /Y	[illegible]	! ⊡[Y	D/t	t[w	a ⊠											3ﾆ			3∂			t[! bb95 h. {h[9{/9b/9	{99 [illegible]	[illegible]	[illegible]	[illegible]	[illegible]
Y9Ð! ☞[! /Y	[illegible]	! ⊡[Y	D/t	t[w	a ⊠		ｫ					ﾊ				3ﾆ	3ｫ	3ﾜ	3∂		3ﾓ	t[! bb95 h. {h[9{/9b/9	{99 [illegible]	[illegible]	[illegible]	[illegible]	[illegible]
Y9Ð! ☞[! /Y	[illegible]	! ⊡[Y	D/t	t[w	a ⊠		ｫ										3ｫ	3ﾜ	3∂			t[! bb95 h. {h[9{/9b/9	{99 [illegible]	[illegible]	[illegible]	[illegible]	[illegible]
Y9Ð! ☞[! /Y	[illegible]	! ⊡[Y	D/t	t[w	a ⊠		ｫ															t[! bb95 h. {h[9{/9b/9	{99 [illegible]	[illegible]	[illegible]	[illegible]	[illegible]
Y9Ð! ☞[! /Y	[illegible]	! ⊡[Y	D/t	t[w	a ⊠												3ｫ	3ﾜ	3∂		3ﾓ	t[! bb95 h. {h[9{/9b/9	{99 [illegible]	[illegible]	[illegible]	[illegible]	[illegible]
Y9Ð! ☞[! /Y	[illegible]	! ⊡[Y	D/t	t[w	a ⊠		ｫ										3ｫ	3ﾜ	3∂		3ﾓ	t[! bb95 h. {h[9{/9b/9	{99 [illegible]	[illegible]	[illegible]	[illegible]	[illegible]
Y9Ð! ☞[! /Y	[illegible]	! ⊡[Y	D/t	t[w	a ⊠	ﾆ									3ｵ	3ﾆ	3ｫ	3ﾜ	3∂		3ﾓ	t[! bb95 h. {h[9{/9b/9	{99 [illegible]	[illegible]	[illegible]	[illegible]	[illegible]
Y9Ð! ☞[! /Y	[illegible]	! ⊡[Y	D/t	t[w	a ⊠	ﾆ	ｫ								3ｵ	3ﾆ	3ｫ	3ﾜ	3∂		3ﾓ	t[! bb95 h. {h[9{/9b/9	{99 [illegible]	[illegible]	[illegible]	[illegible]	[illegible]
Y9Ð/ ☞5! wY Dw! Ɛ	[illegible]	/ ⊡D	D/t	t[w	a ⊠								ﾐ									t[! bb95 h. {h[9{/9b/9	{99 [illegible]	[illegible]	[illegible]	[illegible]	[illegible]
Y9Ð5☞{¤hb9 Dw! Ɛ	[illegible]	5 ⊡D	D/t	t[w	a ⊠								ﾐ									t[! bb95 h. {h[9{/9b/9	{99 [illegible]	[illegible]	[illegible]	[illegible]	[illegible]
Y9Ð/ ☞5! wY Dw! Ɛ	[illegible]	/ ⊡D	D/t	t[w	a ⊠								ﾐ									t[! bb95 h. {h[9{/9b/9	{99 [illegible]	[illegible]	[illegible]	[illegible]	[illegible]
Y9Ð5☞{¤hb9 Dw! Ɛ	[illegible]	5 ⊡D	D/t	t[w	a ⊠								ﾐ									t[! bb95 h. {h[9{/9b/9	{99 [illegible]	[illegible]	[illegible]	[illegible]	[illegible]
Y9Ð/ ☞5! wY Dw! Ɛ	[illegible]	/ ⊡D	D/t	t[w	a ⊠	ﾆ							ﾐ									t[! bb95 h. {h[9{/9b/9	{99 [illegible]	[illegible]	[illegible]	[illegible]	[illegible]
Y9Ð5☞{¤hb9 Dw! Ɛ	[illegible]	5 ⊡D	D/t	t[w	a ⊠	ﾆ							ﾐ									t[! bb95 h. {h[9{/9b/9	{99 [illegible]	[illegible]	[illegible]	[illegible]	[illegible]
Y9Ð/ ☞5! wY Dw! Ɛ	[illegible]	/ ⊡D	D/t	t[w	a ⊠	ﾆ							ﾐ								3ﾓ	t[! bb95 h. {h[9{/9b/9	{99 [illegible]	[illegible]	[illegible]	[illegible]	[illegible]
Y9Ð5☞{¤hb9 Dw! Ɛ	[illegible]	5 ⊡D	D/t	t[w	a ⊠	ﾆ							ﾐ								3ﾓ	t[! bb95 h. {h[9{/9b/9	{99 [illegible]	[illegible]	[illegible]	[illegible]	[illegible]
Y9Ð! ☞[! /Y	[illegible]	! ⊡[Y	D/t	t[w	a ⊠	ﾆ	ｫ	ｵ	∂	ﾇ			ﾐ		3ｵ	3ﾆ	3ｫ	3ﾜ	3∂		3ﾓ	t[! bb95 h. {h[9{/9b/9	{99 [illegible]	[illegible]	[illegible]	[illegible]	[illegible]
Y9Ð! ☞[! /Y	[illegible]	! ⊡[Y	D/t	t[w	a ⊠		ｫ					ﾊ									3ﾓ	t[! bb95 h. {h[9{/9b/9	{99 [illegible]	[illegible]	[illegible]	[illegible]	[illegible]
Y9Ð! ☞[! /Y	[illegible]	! ⊡[Y	D/t	t[w	a ⊠		ｫ			ﾇ												t[! bb95 h. {h[9{/9b/9	{99 [illegible]	[illegible]	[illegible]	[illegible]	[illegible]
Y9Ð! ☞[! /Y	[illegible]	! ⊡[Y	D/t	t[w	a ⊠	ﾆ	ｫ			ﾇ		ﾊ			3ｵ	3ﾆ	3ｫ	3ﾜ	3∂		3ﾓ	t[! bb95 h. {h[9{/9b/9	{99 [illegible]	[illegible]	[illegible]	[illegible]	[illegible]
Y9Ð! ☞[! /Y	[illegible]	! ⊡[Y	D/t	t[w	a ⊠							ﾊ									3ﾓ	t[! bb95 h. {h[9{/9b/9	{99 [illegible]	[illegible]	[illegible]	[illegible]	[illegible]
Y9Ð! ☞[! /Y	[illegible]	! ⊡[Y	D/t	t[w	a ⊠					ﾇ	ﾓ	ﾊ				3ﾆ	3ｫ	3ﾜ	3∂		3ﾓ	t[! bb95 h. {h[9{/9b/9	{99 [illegible]	[illegible]	[illegible]	[illegible]	[illegible]

molex

a AE3れゎAEう [! 59{9! [95 ! {{Ða ! ¤{9! [
. ha ! b5 t lb h- ¤{I 99¤

! {{9a . [Ð59{/wlt¤lhb	! {{9a . [Ðt! w¤ b- a . 9w	/ha thb9b¤				. [h/Y95 ¤9wa lb! [{																{¤! ¤- {	/ha a 9b¤{	ht¤lhb! [! ¤¤! ¤/I a 9b¤{ {h[5 {9t9w! ¤9[Ð			
		¤I 9tw9{9b/9hC! b! . . w9¹ L! ¤lhb lb5l/! ¤9{ ¤I 9 tw9{9b/9hC¤I ! ¤/ha thb9b¤♔				/! ¹ L¤Ð° L¤I ! b- a . 9wlb5l/! ¤9{ . [h/Y95 ¤9wa lb! [th{L¤lhb /! ¹ L¤Ð° L¤I h- ¤! b- a . 9wlb5l/! ¤9{ ht9b ¤9wa lb! [th{L¤lhb																					
		I h- {lbD Y9Ð♔h[hw	Dwha a 9¤ /! t	t[w	a ! ¤{9! [	ろ	ゎ	わ	ゐ	ゑ	を	ん	ゔ	ˋ	3れ	3ろ	3ゎ	3わ	3ゐ	3ゑ	3を			. ! /Y{I 9[[° L¤I wL {	. ! /Y{I 9[[° L¤I h- ¤ wL {	れ! 5! t¤hw° L¤I wL {	れ! 5! t¤hw° L¤I h- ¤ wL {
Y9Ð! ☞[! /Y	[illegible]	! ⊡[Y	D/t	t[w	a ⊠		ŧ			ﾇ		ﾊ					3ｬ	3ｵ.	3ﾇ		3ｾ	t[! bb95 h. {h[9{/9b/9	{99 [illegible]	[illegible]	[illegible]	[illegible]	[illegible]
Y9Ð! ☞[! /Y	[illegible]	! ⊡[Y	D/t	t[w	a ⊠					ﾇ	ぞ	ﾊ			3ｵ	3ﾀ	3ｬ	3ｵ.	3ﾇ		3ｾ	t[! bb95 h. {h[9{/9b/9	{99 [illegible]	[illegible]	[illegible]	[illegible]	[illegible]
Y9Ð! ☞[! /Y	[illegible]	! ⊡[Y	D/t	t[w	a ⊠					ﾇ	ぞ	ﾊ									3ｾ	t[! bb95 h. {h[9{/9b/9	{99 [illegible]	[illegible]	[illegible]	[illegible]	[illegible]
Y9Ð! ☞[! /Y	[illegible]	! ⊡[Y	D/t	t[w	a ⊠					ﾇ	ぞ	ﾊ			3ｵ						3ｾ	t[! bb95 h. {h[9{/9b/9	{99 [illegible]	[illegible]	[illegible]	[illegible]	[illegible]
Y9Ð! ☞[! /Y	[illegible]	! ⊡[Y	D/t	t[w	a ⊠	ƺ			ƌ	ﾇ	ぞ		ﾆ				3ｬ	3ｵ.	3ﾇ		3ｾ	t[! bb95 h. {h[9{/9b/9	{99 [illegible]	[illegible]	[illegible]	[illegible]	[illegible]
Y9Ð! ☞[! /Y	[illegible]	! ⊡[Y	D/t	t[w	a ⊠	ƺ	ŧ		ƌ	ﾇ	ぞ		ﾆ		3ｵ		3ｬ	3ｵ.	3ﾇ	3ﾐ	3ｾ	t[! bb95 h. {h[9{/9b/9	{99 [illegible]	[illegible]	[illegible]	[illegible]	[illegible]
Y9Ð! ☞[! /Y	[illegible]	! ⊡[Y	D/t	t[w	a ⊠	ƺ			ƌ		ぞ	ﾊ	ﾆ		3ｵ			3ｵ.	3ﾇ	3ﾐ		t[! bb95 h. {h[9{/9b/9	{99 [illegible]	[illegible]	[illegible]	[illegible]	[illegible]
Y9Ð! ☞[! /Y	[illegible]	! ⊡[Y	D/t	t[w	a ⊠										3ｵ			3ｵ.	3ﾇ	3ﾐ	3ｾ	t[! bb95 h. {h[9{/9b/9	{99 [illegible]	[illegible]	[illegible]	[illegible]	[illegible]
Y9Ð! ☞[! /Y	[illegible]	! ⊡[Y	D/t	t[w	a ⊠	ƺ	ŧ	ﾅ	ƌ	ﾇ	ぞ					3ﾀ	3ｬ					t[! bb95 h. {h[9{/9b/9	{99 [illegible]	[illegible]	[illegible]	[illegible]	[illegible]
Y9Ð! ☞[! /Y	[illegible]	! ⊡[Y	D/t	t[w	a ⊠										3ｵ					3ﾐ		t[! bb95 h. {h[9{/9b/9	{99 [illegible]	[illegible]	[illegible]	[illegible]	[illegible]
Y9Ð! ☞[! /Y	[illegible]	! ⊡[Y	D/t	t[w	a ⊠										3ｵ					3ﾐ	3ｾ	t[! bb95 h. {h[9{/9b/9	{99 [illegible]	[illegible]	[illegible]	[illegible]	[illegible]
Y9Ð! ☞[! /Y	[illegible]	! ⊡[Y	D/t	t[w	a ⊠			ﾅ	ƌ						3ｵ					3ﾐ	3ｾ	t[! bb95 h. {h[9{/9b/9	{99 [illegible]	[illegible]	[illegible]	[illegible]	[illegible]
Y9Ð! ☞Ð9[[h°	[illegible]	! ÐP	D/t	t[w	a ⊠																	t[! bb95 h. {h[9{/9b/9	{99 [illegible]	[illegible]	[illegible]	[illegible]	[illegible]
Y9Ð! ☞[! /Y	[illegible]	! ⊡[Y	D/t	t[w	a ⊠					ﾇ			ﾆ									t[! bb95 h. {h[9{/9b/9	{99 [illegible]	[illegible]	[illegible]	[illegible]	[illegible]
Y9Ð! ☞[! /Y	[illegible]	! ⊡[Y	D/t	t[w	a ⊠					ﾇ	ぞ	ﾊ	ﾆ		3ｵ	3ﾀ	3ｬ					t[! bb95 h. {h[9{/9b/9	{99 [illegible]	[illegible]	[illegible]	[illegible]	[illegible]
Y9Ð! ☞[! /Y	[illegible]	! ⊡[Y	D/t	t[w	a ⊠			ﾅ	ƌ	ﾇ	ぞ							3ｵ.	3ﾇ			t[! bb95 h. {h[9{/9b/9	{99 [illegible]	[illegible]	[illegible]	[illegible]	[illegible]
Y9Ð! ☞[! /Y	[illegible]	! ⊡[Y	D/t	t[w	a ⊠	ƺ			ƌ	ﾇ	ぞ	ﾊ	ﾆ		3ｵ			3ｵ.	3ﾇ	3ﾐ		t[! bb95 h. {h[9{/9b/9	{99 [illegible]	[illegible]	[illegible]	[illegible]	[illegible]
Y9Ð! ☞[! /Y	[illegible]	! ⊡[Y	D/t	t[w	a ⊠	ƺ			ƌ		ぞ	ﾊ	ﾆ		3ｵ	3ﾀ	3ｬ	3ｵ.	3ﾇ	3ﾐ		t[! bb95 h. {h[9{/9b/9	{99 [illegible]	[illegible]	[illegible]	[illegible]	[illegible]
Y9Ð! ☞[! /Y	[illegible]	! ⊡[Y	D/t	t[w	a ⊠											3ﾀ	3ｬ			3ﾐ		t[! bb95 h. {h[9{/9b/9	{99 [illegible]	[illegible]	[illegible]	[illegible]	[illegible]
Y9Ð! ☞[! /Y	[illegible]	! ⊡[Y	D/t	t[w	a ⊠			ﾅ														t[! bb95 h. {h[9{/9b/9	{99 [illegible]	[illegible]	[illegible]	[illegible]	[illegible]
Y9Ð! ☞[! /Y	[illegible]	! ⊡[Y	D/t	t[w	a ⊠	ƺ				ﾇ		ﾊ				3ﾀ	3ｬ	3ｵ.	3ﾇ	3ﾐ	3ｾ	t[! bb95 h. {h[9{/9b/9	{99 [illegible]	[illegible]	[illegible]	[illegible]	[illegible]
Y9Ð! ☞[! /Y	[illegible]	! ⊡[Y	D/t	t[w	a ⊠		ŧ			ﾇ		ﾊ				3ﾀ	3ｬ	3ｵ.	3ﾇ	3ﾐ	3ｾ	t[! bb95 h. {h[9{/9b/9	{99 [illegible]	[illegible]	[illegible]	[illegible]	[illegible]
Y9Ð! ☞[! /Y	[illegible]	! ⊡[Y	D/t	t[w	a ⊠	ƺ	ŧ			ﾇ												t[! bb95 h. {h[9{/9b/9	{99 [illegible]	[illegible]	[illegible]	[illegible]	[illegible]
Y9Ð! ☞[! /Y	[illegible]	! ⊡[Y	D/t	t[w	a ⊠	ƺ	ŧ					ﾊ				3ﾀ	3ｬ	3ｵ.	3ﾇ	3ﾐ	3ｾ	t[! bb95 h. {h[9{/9b/9	{99 [illegible]	[illegible]	[illegible]	[illegible]	[illegible]
Y9Ð! ☞[! /Y	[illegible]	! ⊡[Y	D/t	t[w	a ⊠	ƺ	ŧ			ﾇ										3ﾐ		t[! bb95 h. {h[9{/9b/9	{99 [illegible]	[illegible]	[illegible]	[illegible]	[illegible]
Y9Ð! ☞[! /Y	[illegible]	! ⊡[Y	D/t	t[w	a ⊠	ƺ	ŧ			ﾇ		ﾊ				3ﾀ	3ｬ	3ｵ.	3ﾇ	3ﾐ	3ｾ	t[! bb95 h. {h[9{/9b/9	{99 [illegible]	[illegible]	[illegible]	[illegible]	[illegible]
Y9Ð! ☞[! /Y	[illegible]	! ⊡[Y	D/t	t[w	a ⊠	ƺ	ŧ	ﾅ														t[! bb95 h. {h[9{/9b/9	{99 [illegible]	[illegible]	[illegible]	[illegible]	[illegible]
Y9Ð! ☞[! /Y	[illegible]	! ⊡[Y	D/t	t[w	a ⊠					ﾇ		ﾊ									3ｾ	t[! bb95 h. {h[9{/9b/9	{99 [illegible]	[illegible]	[illegible]	[illegible]	[illegible]
Y9Ð! ☞[! /Y	[illegible]	! ⊡[Y	D/t	t[w	a ⊠		ŧ	ﾅ							3ｵ	3ﾀ						t[! bb95 h. {h[9{/9b/9	{99 [illegible]	[illegible]	[illegible]	[illegible]	[illegible]
Y9Ð! ☞[! /Y	[illegible]	! ⊡[Y	D/t	t[w	a ⊠	ƺ	ŧ	ﾅ		ﾇ	ぞ						3ｬ	3ｵ.				t[! bb95 h. {h[9{/9b/9	{99 [illegible]	[illegible]	[illegible]	[illegible]	[illegible]
Y9Ð! ☞[! /Y	[illegible]	! ⊡[Y	D/t	t[w	a ⊠			ﾅ							3ｵ			3ｵ.	3ﾇ	3ﾐ		t[! bb95 h. {h[9{/9b/9	{99 [illegible]	[illegible]	[illegible]	[illegible]	[illegible]
Y9Ð! ☞[! /Y	[illegible]	! ⊡[Y	D/t	t[w	a ⊠							ﾊ							3ﾇ	3ﾐ	3ｾ	t[! bb95 h. {h[9{/9b/9	{99 [illegible]	[illegible]	[illegible]	[illegible]	[illegible]
Y9Ð! ☞[! /Y	[illegible]	! ⊡[Y	D/t	t[w	a ⊠							ﾊ	ﾆ				3ｬ					t[! bb95 h. {h[9{/9b/9	{99 [illegible]	[illegible]	[illegible]	[illegible]	[illegible]
Y9Ð! ☞[! /Y	[illegible]	! ⊡[Y	D/t	t[w	a ⊠			ﾅ							3ｵ	3ﾀ	3ｬ	3ｵ.	3ﾇ	3ﾐ	3ｾ	t[! bb95 h. {h[9{/9b/9	{99 [illegible]	[illegible]	[illegible]	[illegible]	[illegible]
Y9Ð! ☞[! /Y	[illegible]	! ⊡[Y	D/t	t[w	a ⊠			ﾅ	ƌ	ﾇ	ぞ	ﾊ			3ｵ					3ﾐ	3ｾ	t[! bb95 h. {h[9{/9b/9	{99 [illegible]	[illegible]	[illegible]	[illegible]	[illegible]
Y9Ð! ☞[! /Y	[illegible]	! ⊡[Y	D/t	t[w	a ⊠	ƺ	ŧ			ﾇ								3ｵ.	3ﾇ			t[! bb95 h. {h[9{/9b/9	{99 [illegible]	[illegible]	[illegible]	[illegible]	[illegible]
Y9Ð! ☞[! /Y	[illegible]	! ⊡[Y	D/t	t[w	a ⊠					ﾇ		ﾊ	ﾆ		3ｵ	3ﾀ	3ｬ	3ｵ.	3ﾇ			t[! bb95 h. {h[9{/9b/9	{99 [illegible]	[illegible]	[illegible]	[illegible]	[illegible]
Y9Ð! ☞[! /Y	[illegible]	! ⊡[Y	D/t	t[w	a ⊠					ﾇ								3ｵ.	3ﾇ			t[! bb95 h. {h[9{/9b/9	{99 [illegible]	[illegible]	[illegible]	[illegible]	[illegible]
Y9Ð! ☞[! /Y	[illegible]	! ⊡[Y	D/t	t[w	a ⊠	ƺ	ŧ			ﾇ												t[! bb95 h. {h[9{/9b/9	{99 [illegible]	[illegible]	[illegible]	[illegible]	[illegible]
Y9Ð! ☞[! /Y	[illegible]	! ⊡[Y	D/t	t[w	a ⊠	ƺ	ŧ			ﾇ		ﾊ	ﾆ		3ｵ	3ﾀ	3ｬ	3ｵ.	3ﾇ			t[! bb95 h. {h[9{/9b/9	{99 [illegible]	[illegible]	[illegible]	[illegible]	[illegible]
Y9Ð! ☞[! /Y	[illegible]	! ⊡[Y	D/t	t[w	a ⊠						ぞ				3ｵ	3ﾀ	3ｬ	3ｵ.	3ﾇ	3ﾐ	3ｾ	t[! bb95 h. {h[9{/9b/9	{99 [illegible]	[illegible]	[illegible]	[illegible]	[illegible]
Y9Ð! ☞[! /Y	[illegible]	! ⊡[Y	D/t	t[w	a ⊠						ぞ							3ｵ.	3ﾇ	3ﾐ	3ｾ	t[! bb95 h. {h[9{/9b/9	{99 [illegible]	[illegible]	[illegible]	[illegible]	[illegible]
Y9Ð! ☞[! /Y	[illegible]	! ⊡[Y	D/t	t[w	a ⊠						ぞ							3ｵ.	3ﾇ			t[! bb95 h. {h[9{/9b/9	{99 [illegible]	[illegible]	[illegible]	[illegible]	[illegible]
Y9Ð! ☞[! /Y	[illegible]	! ⊡[Y	D/t	t[w	a ⊠	ƺ	ŧ	ﾅ	ƌ	ﾇ	ぞ							3ｵ.	3ﾇ	3ﾐ	3ｾ	t[! bb95 h. {h[9{/9b/9	{99 [illegible]	[illegible]	[illegible]	[illegible]	[illegible]
Y9Ð! ☞[! /Y	[illegible]	! ⊡[Y	D/t	t[w	a ⊠	ƺ							ﾆ							3ﾐ		t[! bb95 h. {h[9{/9b/9	{99 [illegible]	[illegible]	[illegible]	[illegible]	[illegible]
Y9Ð! ☞[! /Y	[illegible]	! ⊡[Y	D/t	t[w	a ⊠	ƺ														3ﾐ		t[! bb95 h. {h[9{/9b/9	{99 [illegible]	[illegible]	[illegible]	[illegible]	[illegible]
Y9Ð! ☞[! /Y	[illegible]	! ⊡[Y	D/t	t[w	a ⊠								ﾆ					3ｵ.			3ｾ	t[! bb95 h. {h[9{/9b/9	{99 [illegible]	[illegible]	[illegible]	[illegible]	[illegible]
Y9Ð! ☞[! /Y	[illegible]	! ⊡[Y	D/t	t[w	a ⊠								ﾆ			3ﾀ	3ｬ	3ｵ.			3ｾ	t[! bb95 h. {h[9{/9b/9	{99 [illegible]	[illegible]	[illegible]	[illegible]	[illegible]
Y9Ð! ☞[! /Y	[illegible]	! ⊡[Y	D/t	t[w	a ⊠				ƌ	ﾇ	ぞ	ﾊ			3ｵ				3ﾇ	3ﾐ	3ｾ	t[! bb95 h. {h[9{/9b/9	{99 [illegible]	[illegible]	[illegible]	[illegible]	[illegible]
Y9Ð! ☞[! /Y	[illegible]	! ⊡[Y	D/t	t[w	a ⊠							ﾊ			3ｵ							t[! bb95 h. {h[9{/9b/9	{99 [illegible]	[illegible]	[illegible]	[illegible]	[illegible]
Y9Ð! ☞[! /Y	[illegible]	! ⊡[Y	D/t	t[w	a ⊠	ƺ		ﾅ		ﾇ	ぞ						3ｬ	3ｵ.				t[! bb95 h. {h[9{/9b/9	{99 [illegible]	[illegible]	[illegible]	[illegible]	[illegible]
Y9Ð! ☞[! /Y	[illegible]	! ⊡[Y	D/t	t[w	a ⊠			ﾅ		ﾇ	ぞ	ﾊ			3ｵ			3ｵ.	3ﾇ	3ﾐ	3ｾ	t[! bb95 h. {h[9{/9b/9	{99 [illegible]	[illegible]	[illegible]	[illegible]	[illegible]
Y9Ð! ☞[! /Y	[illegible]	! ⊡[Y	D/t	t[w	a ⊠											3ﾀ	3ｬ		3ﾇ	3ﾐ	3ｾ	t[! bb95 h. {h[9{/9b/9	{99 [illegible]	[illegible]	[illegible]	[illegible]	[illegible]
Y9Ð! ☞[! /Y	[illegible]	! ⊡[Y	D/t	t[w	a ⊠						ぞ	ﾊ	ﾆ		3ｵ	3ﾀ	3ｬ	3ｵ.	3ﾇ	3ﾐ		t[! bb95 h. {h[9{/9b/9	{99 [illegible]	[illegible]	[illegible]	[illegible]	[illegible]
Y9Ð! ☞[! /Y	[illegible]	! ⊡[Y	D/t	t[w	a ⊠	ƺ	ŧ					ﾊ			3ｵ	3ﾀ	3ｬ	3ｵ.	3ﾇ		3ｾ	t[! bb95 h. {h[9{/9b/9	{99 [illegible]	[illegible]	[illegible]	[illegible]	[illegible]
Y9Ð! ☞[! /Y	[illegible]	! ⊡[Y	D/t	t[w	a ⊠		ŧ					ﾊ					3ｬ	3ｵ.	3ﾇ		3ｾ	t[! bb95 h. {h[9{/9b/9	{99 [illegible]	[illegible]	[illegible]	[illegible]	[illegible]
Y9Ð! ☞[! /Y	[illegible]	! ⊡[Y	D/t	t[w	a ⊠		ŧ	ﾅ				ﾊ			3ｵ	3ﾀ				3ﾐ	3ｾ	t[! bb95 h. {h[9{/9b/9	{99 [illegible]	[illegible]	[illegible]	[illegible]	[illegible]
Y9Ð! ☞[! /Y	[illegible]	! ⊡[Y	D/t	t[w	a ⊠	ƺ			ƌ	ﾇ	ぞ		ﾆ				3ｬ	3ｵ.	3ﾇ			t[! bb95 h. {h[9{/9b/9	{99 [illegible]	[illegible]	[illegible]	[illegible]	[illegible]
Y9Ð. ☞[lDI ¤Dw! Ɛ	[illegible]	. ⅡD	D/t	t[w	a ⊠					ﾇ	ぞ						3ｬ	3ｵ.	3ﾇ	3ﾐ		t[! bb95 h. {h[9{/9b/9	{99 [illegible]	[illegible]	[illegible]	[illegible]	[illegible]
Y9Ð! ☞[! /Y	[illegible]	! ⊡[Y	D/t	t[w	a ⊠							ﾊ	ﾆ									t[! bb95 h. {h[9{/9b/9	{99 [illegible]	[illegible]	[illegible]	[illegible]	[illegible]
Y9Ð! ☞[! /Y	[illegible]	! ⊡[Y	D/t	t[w	a ⊠										3ｵ			3ｵ.	3ﾇ	3ﾐ	3ｾ	t[! bb95 h. {h[9{/9b/9	{99 [illegible]	[illegible]	[illegible]	[illegible]	[illegible]
Y9Ð! ☞[! /Y	[illegible]	! ⊡[Y	D/t	t[w	a ⊠	ƺ	ŧ	ﾅ	ƌ	ﾇ	ぞ					3ﾀ	3ｬ					t[! bb95 h. {h[9{/9b/9	{99 [illegible]	[illegible]	[illegible]	[illegible]	[illegible]
Y9Ð! ☞[! /Y	[illegible]	! ⊡[Y	D/t	t[w	a ⊠			ﾅ	ƌ		ぞ	ﾊ									3ｾ	t[! bb95 h. {h[9{/9b/9	{99 [illegible]	[illegible]	[illegible]	[illegible]	[illegible]
Y9Ð! ☞[! /Y	[illegible]	! ⊡[Y	D/t	t[w	a ⊠						ぞ	ﾊ									3ｾ	t[! bb95 h. {h[9{/9b/9	{99 [illegible]	[illegible]	[illegible]	[illegible]	[illegible]
Y9Ð! ☞[! /Y	[illegible]	! ⊡[Y	D/t	t[w	a ⊠	ƺ	ŧ		ƌ	ﾇ		ﾊ	ﾆ							3ﾐ	3ｾ	t[! bb95 h. {h[9{/9b/9	{99 [illegible]	[illegible]	[illegible]	[illegible]	[illegible]
Y9Ð! ☞[! /Y	[illegible]	! ⊡[Y	D/t	t[w	a ⊠											3ﾀ	3ｬ	3ｵ.	3ﾇ	3ﾐ		t[! bb95 h. {h[9{/9b/9	{99 [illegible]	[illegible]	[illegible]	[illegible]	[illegible]
Y9Ð! ☞[! /Y	[illegible]	! ⊡[Y	D/t	t[w	a ⊠												3ｬ	3ｵ.	3ﾇ			t[! bb95 h. {h[9{/9b/9	{99 [illegible]	[illegible]	[illegible]	[illegible]	[illegible]
Y9Ð. ☞[lDI ¤Dw! Ɛ	[illegible]	. ⅡD	D/t	t[w	a ⊠														3ﾇ	3ﾐ		t[! bb95 h. {h[9{/9b/9	{99 [illegible]	[illegible]	[illegible]	[illegible]	[illegible]
Y9Ð! ☞[! /Y	[illegible]	! ⊡[Y	D/t	t[w	a ⊠		ŧ						ﾆ		3ｵ	3ﾀ				3ﾐ	3ｾ	t[! bb95 h. {h[9{/9b/9	{99 [illegible]	[illegible]	[illegible]	[illegible]	[illegible]
Y9Ð! ☞[! /Y	[illegible]	! ⊡[Y	D/t	t[w	a ⊠										3ｵ	3ﾀ				3ﾐ		t[! bb95 h. {h[9{/9b/9	{99 [illegible]	[illegible]	[illegible]	[illegible]	[illegible]
Y9Ð! ☞[! /Y	[illegible]	! ⊡[Y	D/t	t[w	a ⊠	ƺ							ﾆ		3ｵ	3ﾀ				3ﾐ		t[! bb95 h. {h[9{/9b/9	{99 [illegible]	[illegible]	[illegible]	[illegible]	[illegible]
Y9Ð! ☞[! /Y	[illegible]	! ⊡[Y	D/t	t[w	a ⊠	ƺ	ŧ	ﾅ	ƌ	ﾇ	ぞ	ﾊ	ﾆ		3ｵ	3ﾀ				3ﾐ		t[! bb95 h. {h[9{/9b/9	{99 [illegible]	[illegible]	[illegible]	[illegible]	[illegible]
Y9Ð! ☞[! /Y	[illegible]	! ⊡[Y	D/t	t[w	a ⊠	ƺ							ﾆ		3ｵ	3ﾀ				3ﾐ	3ｾ	t[! bb95 h. {h[9{/9b/9	{99 [illegible]	[illegible]	[illegible]	[illegible]	[illegible]
Y9Ð! ☞[! /Y	[illegible]	! ⊡[Y	D/t	t[w	a ⊠										3ｵ	3ﾀ				3ﾐ	3ｾ	t[! bb95 h. {h[9{/9b/9	{99 [illegible]	[illegible]	[illegible]	[illegible]	[illegible]
Y9Ð! ☞[! /Y	[illegible]	! ⊡[Y	D/t	t[w	a ⊠	ƺ	ŧ	ﾅ	ƌ	ﾇ	ぞ	ﾊ	ﾆ									t[! bb95 h. {h[9{/9b/9	{99 [illegible]	[illegible]	[illegible]	[illegible]	[illegible]
Y9Ð! ☞[! /Y	[illegible]	! ⊡[Y	D/t	t[w	a ⊠	ƺ																t[! bb95 h. {h[9{/9b/9	{99 [illegible]	[illegible]	[illegible]	[illegible]	[illegible]
Y9Ð! ☞[! /Y	[illegible]	! ⊡[Y	D/t	t[w	a ⊠	ƺ	ŧ	ﾅ	ƌ	ﾇ	ぞ	ﾊ	ﾆ			3ﾀ					3ｾ	t[! bb95 h. {h[9{/9b/9	{99 [illegible]	[illegible]	[illegible]	[illegible]	[illegible]
Y9Ð! ☞[! /Y	[illegible]	! ⊡[Y	D/t	t[w	a ⊠	ƺ			ƌ	ﾇ	ぞ	ﾊ										t[! bb95 h. {h[9{/9b/9	{99 [illegible]	[illegible]	[illegible]	[illegible]	[illegible]
Y9Ð! ☞[! /Y	[illegible]	! ⊡[Y	D/t	t[w	a ⊠	ƺ			ƌ	ﾇ	ぞ	ﾊ	ﾆ			3ﾀ						t[! bb95 h. {h[9{/9b/9	{99 [illegible]	[illegible]	[illegible]	[illegible]	[illegible]
Y9Ð! ☞[! /Y	[illegible]	! ⊡[Y	D/t	t[w	a ⊠													3ｵ.			3ｾ	t[! bb95 h. {h[9{/9b/9	{99 [illegible]	[illegible]	[illegible]	[illegible]	[illegible]
Y9Ð! ☞[! /Y	[illegible]	! ⊡[Y	D/t	t[w	a ⊠											3ﾀ	3ｬ	3ｵ.			3ｾ	t[! bb95 h. {h[9{/9b/9	{99 [illegible]	[illegible]	[illegible]	[illegible]	[illegible]
Y9Ð! ☞[! /Y	[illegible]	! ⊡[Y	D/t	t[w	a ⊠	ƺ							ﾆ			3ﾀ						t[! bb95 h. {h[9{/9b/9	{99 [illegible]	[illegible]	[illegible]	[illegible]	[illegible]
Y9Ð! ☞[! /Y	[illegible]	! ⊡[Y	D/t	t[w	a ⊠	ƺ	ŧ				ぞ	ﾊ	ﾆ		3ｵ				3ﾇ	3ﾐ	3ｾ	t[! bb95 h. {h[9{/9b/9	{99 [illegible]	[illegible]	[illegible]	[illegible]	[illegible]
Y9Ð! ☞[! /Y	[illegible]	! ⊡[Y	D/t	t[w	a ⊠	ƺ	ŧ					ﾊ	ﾆ		3ｵ					3ﾐ	3ｾ	t[! bb95 h. {h[9{/9b/9	{99 [illegible]	[illegible]	[illegible]	[illegible]	[illegible]
Y9Ð! ☞[! /Y	[illegible]	! ⊡[Y	D/t	t[w	a ⊠			ﾅ	ƌ	ﾇ	ぞ	ﾊ	ﾆ			3ﾀ	3ｬ	3ｵ.	3ﾇ	3ﾐ	3ｾ	t[! bb95 h. {h[9{/9b/9	{99 [illegible]	[illegible]	[illegible]	[illegible]	[illegible]
Y9Ð! ☞[! /Y	[illegible]	! ⊡[Y	D/t	t[w	a ⊠						ぞ	ﾊ	ﾆ						3ﾇ	3ﾐ	3ｾ	t[! bb95 h. {h[9{/9b/9	{99 [illegible]	[illegible]	[illegible]	[illegible]	[illegible]
Y9Ð! ☞[! /Y	[illegible]	! ⊡[Y	D/t	t[w	a ⊠							ﾊ	ﾆ							3ﾐ	3ｾ	t[! bb95 h. {h[9{/9b/9	{99 [illegible]	[illegible]	[illegible]	[illegible]	[illegible]
Y9Ð! ☞[! /Y	[illegible]	! ⊡[Y	D/t	t[w	a ⊠			ﾅ	ƌ	ﾇ	ぞ	ﾊ									3ｾ	t[! bb95 h. {h[9{/9b/9	{99 [illegible]	[illegible]	[illegible]	[illegible]	[illegible]
Y9Ð! ☞[! /Y	[illegible]	! ⊡[Y	D/t	t[w	a ⊠				ƌ								3ｬ					t[! bb95 h. {h[9{/9b/9	{99 [illegible]	[illegible]	[illegible]	[illegible]	[illegible]
Y9Ð! ☞[! /Y	[illegible]	! ⊡[Y	D/t	t[w	a ⊠				ƌ						3ｵ		3ｬ					t[! bb95 h. {h[9{/9b/9	{99 [illegible]	[illegible]	[illegible]	[illegible]	[illegible]
Y9Ð! ☞[! /Y	[illegible]	! ⊡[Y	D/t	t[w	a ⊠			ﾅ	ƌ						3ｵ			3ｵ.	3ﾇ			t[! bb95 h. {h[9{/9b/9	{99 [illegible]	[illegible]	[illegible]	[illegible]	[illegible]
Y9Ð! ☞[! /Y	[illegible]	! ⊡[Y	D/t	t[w	a ⊠	ƺ	ŧ		ƌ		ぞ	ﾊ	ﾆ				3ｬ					t[! bb95 h. {h[9{/9b/9	{99 [illegible]	[illegible]	[illegible]	[illegible]	[illegible]

molex

a Ɛろ㉔れゎƐゔ. [!59{9![95!{{Ða!¤{9![
.ha !b5 tlb h-¤{I 99¤

!{{9a.[Ð59{/wlt¤lhb	!{{9a.[Ðt!w¤ b-a.9w	/ha thb9b¤				.[h/Y95 ¤9wa lb![{																	{¤!¤-{	/ha a 9b¤{	ht¤lhb![!¤¤!¤/I a 9b¤{{h[5{9t9wƖ¤9[Ð			
		¤I 9tw9{9b/9hC!b!..w9¹Ɩ¤lhb lb5Ɩ/!¤9{¤I 9 tw9{9b/9hC¤I!¤/ha thb9b¤				/!¹Ɩ¤Ð° Ɩ¤I ! b-a.9wlb5Ɩ/!¤9{.[h/Y95 ¤9wa lb![th{Ɩ¤lhb /!¹Ɩ¤Ð° Ɩ¤I h-¤! b-a.9wlb5Ɩ/!¤9{ht9b ¤9wa lb![th{Ɩ¤lhb																						
		Ih-{lbD Y9Ð/ℓh[hw	Dwha a 9¤ /!t	t[w	a!¤{9![	ろ	ゎ	わ	ゐ	ゑ	を	ん	ゔ	゛	ろれ	ろろ	ろゎ	ろわ	ろゐ	ろゑ	ろを			.!/Y{I 9[[° Ɩ¤I wƖ{	.!/Y{I 9[[° Ɩ¤I h-¤wƖ{	れ!5!t¤hw° Ɩ¤I wƖ{	れ!5!t¤hw° Ɩ¤I h-¤ wƖ{
Y9Ð!☞[!/Y	[illegible]	!⊡[Y	D/t	t[w	a ⊠	ﾐ	ｷ		ｦ		ｾ	ｈ	ﾆ		ろｷ		ろｷ					t[!bb95 h.{h[9{/9b/9	{99 [illegible]	[illegible]	[illegible]	[illegible]	[illegible]
Y9Ð!☞[!/Y	[illegible]	!⊡[Y	D/t	t[w	a ⊠	ﾐ	ｷ	ｷ	ｦ		ｾ	ｈ	ﾆ		ろｷ			ろｷ	ろｦ		ろｾ	t[!bb95 h.{h[9{/9b/9	{99 [illegible]	[illegible]	[illegible]	[illegible]	[illegible]
Y9Ð!☞[!/Y	[illegible]	!⊡[Y	D/t	t[w	a ⊠		ｷ			ﾇ		ｈ			ろｷ	ろｴ	ろｷ	ろｷ	ろｦ		ろｾ	t[!bb95 h.{h[9{/9b/9	{99 [illegible]	[illegible]	[illegible]	[illegible]	[illegible]
Y9Ð!☞[!/Y	[illegible]	!⊡[Y	D/t	t[w	a ⊠										ろｷ	ろｴ	ろｷ	ろｷ			ろｾ	t[!bb95 h.{h[9{/9b/9	{99 [illegible]	[illegible]	[illegible]	[illegible]	[illegible]
Y9Ð!☞[!/Y	[illegible]	!⊡[Y	D/t	t[w	a ⊠	ﾐ	ｷ	ｷ		ﾇ	ｾ	ｈ	ﾆ		ろｷ	ろｴ		ろｷ	ろｦ	ろｸ	ろｾ	t[!bb95 h.{h[9{/9b/9	{99 [illegible]	[illegible]	[illegible]	[illegible]	[illegible]
Y9Ð!☞[!/Y	[illegible]	!⊡[Y	D/t	t[w	a ⊠	ﾐ	ｷ	ｷ		ﾇ	ｾ	ｈ	ﾆ			ろｴ		ろｷ	ろｦ	ろｸ	ろｾ	t[!bb95 h.{h[9{/9b/9	{99 [illegible]	[illegible]	[illegible]	[illegible]	[illegible]
Y9Ð!☞[!/Y	[illegible]	!⊡[Y	D/t	t[w	a ⊠							ｈ	ﾆ					ろｷ			ろｾ	t[!bb95 h.{h[9{/9b/9	{99 [illegible]	[illegible]	[illegible]	[illegible]	[illegible]
Y9Ð!☞[!/Y	[illegible]	!⊡[Y	D/t	t[w	a ⊠							ｈ	ﾆ					ろｷ			ろｾ	t[!bb95 h.{h[9{/9b/9	{99 [illegible]	[illegible]	[illegible]	[illegible]	[illegible]
Y9Ð!☞[!/Y	[illegible]	!⊡[Y	D/t	t[w	a ⊠							ｈ	ﾆ		ろｷ	ろｴ	ろｷ	ろｷ	ろｦ			t[!bb95 h.{h[9{/9b/9	{99 [illegible]	[illegible]	[illegible]	[illegible]	[illegible]
Y9Ð!☞[!/Y	[illegible]	!⊡[Y	D/t	t[w	a ⊠						ｾ					ろｴ	ろｷ	ろｷ	ろｦ			t[!bb95 h.{h[9{/9b/9	{99 [illegible]	[illegible]	[illegible]	[illegible]	[illegible]
Y9Ð!☞[!/Y	[illegible]	!⊡[Y	D/t	t[w	a ⊠	ﾐ	ｷ	ｷ	ｦ	ﾇ	ｾ	ｈ	ﾆ		ろｷ	ろｴ	ろｷ	ろｷ	ろｦ	ろｸ		t[!bb95 h.{h[9{/9b/9	{99 [illegible]	[illegible]	[illegible]	[illegible]	[illegible]
Y9Ð!☞[!/Y	[illegible]	!⊡[Y	D/t	t[w	a ⊠	ﾐ	ｷ	ｷ	ｦ	ﾇ	ｾ	ｈ	ﾆ		ろｷ	ろｴ				ろｸ	ろｾ	t[!bb95 h.{h[9{/9b/9	{99 [illegible]	[illegible]	[illegible]	[illegible]	[illegible]
Y9Ð!☞[!/Y	[illegible]	!⊡[Y	D/t	t[w	a ⊠			ｷ			ｾ											t[!bb95 h.{h[9{/9b/9	{99 [illegible]	[illegible]	[illegible]	[illegible]	[illegible]
Y9Ð.☞ƖDI¤DwƖ Ɛ	[illegible]	.⊡D	D/t	t[w	a ⊠						ｾ							ろｷ	ろｦ	ろｸ	ろｾ	t[!bb95 h.{h[9{/9b/9	{99 [illegible]	[illegible]	[illegible]	[illegible]	[illegible]
Y9Ð.☞ƖDI¤DwƖ Ɛ	[illegible]	.⊡D	D/t	t[w	a ⊠					ﾇ								ろｷ	ろｦ	ろｸ	ろｾ	t[!bb95 h.{h[9{/9b/9	{99 [illegible]	[illegible]	[illegible]	[illegible]	[illegible]
Y9Ð!☞[!/Y	[illegible]	!⊡[Y	D/t	t[w	a ⊠			ｷ	ｦ											ろｸ	ろｾ	t[!bb95 h.{h[9{/9b/9	{99 [illegible]	[illegible]	[illegible]	[illegible]	[illegible]
Y9Ð!☞[!/Y	[illegible]	!⊡[Y	D/t	t[w	a ⊠										ろｷ	ろｴ		ろｷ			ろｾ	t[!bb95 h.{h[9{/9b/9	{99 [illegible]	[illegible]	[illegible]	[illegible]	[illegible]
Y9Ð!☞[!/Y	[illegible]	!⊡[Y	D/t	t[w	a ⊠		ｷ					ｈ	ﾆ					ろｷ	ろｦ	ろｸ	ろｾ	t[!bb95 h.{h[9{/9b/9	{99 [illegible]	[illegible]	[illegible]	[illegible]	[illegible]
Y9Ð!☞[!/Y	[illegible]	!⊡[Y	D/t	t[w	a ⊠						ｾ				ろｷ	ろｴ	ろｷ					t[!bb95 h.{h[9{/9b/9	{99 [illegible]	[illegible]	[illegible]	[illegible]	[illegible]
Y9Ð!☞[!/Y	[illegible]	!⊡[Y	D/t	t[w	a ⊠	ﾐ	ｷ	ｷ	ｦ	ﾇ	ｾ											t[!bb95 h.{h[9{/9b/9	{99 [illegible]	[illegible]	[illegible]	[illegible]	[illegible]
Y9Ð!☞[!/Y	[illegible]	!⊡[Y	D/t	t[w	a ⊠		ｷ			ﾇ							ろｷ	ろｷ				t[!bb95 h.{h[9{/9b/9	{99 [illegible]	[illegible]	[illegible]	[illegible]	[illegible]
Y9Ð!☞[!/Y	[illegible]	!⊡[Y	D/t	t[w	a ⊠		ｷ					ｈ			ろｷ	ろｴ	ろｷ	ろｷ	ろｦ		ろｾ	t[!bb95 h.{h[9{/9b/9	{99 [illegible]	[illegible]	[illegible]	[illegible]	[illegible]
Y9Ð!☞[!/Y	[illegible]	!⊡[Y	D/t	t[w	a ⊠	ﾐ	ｷ	ｷ	ｦ	ﾇ		ｈ	ﾆ									t[!bb95 h.{h[9{/9b/9	{99 [illegible]	[illegible]	[illegible]	[illegible]	[illegible]
Y9Ð!☞[!/Y	[illegible]	!⊡[Y	D/t	t[w	a ⊠							ｈ	ﾆ			ろｴ	ろｷ		ろｦ	ろｸ	ろｾ	t[!bb95 h.{h[9{/9b/9	{99 [illegible]	[illegible]	[illegible]	[illegible]	[illegible]
Y9Ð!☞[!/Y	[illegible]	!⊡[Y	D/t	t[w	a ⊠	ﾐ	ｷ															t[!bb95 h.{h[9{/9b/9	{99 [illegible]	[illegible]	[illegible]	[illegible]	[illegible]
Y9Ð!☞[!/Y	[illegible]	!⊡[Y	D/t	t[w	a ⊠			ｷ			ｾ				ろｷ	ろｴ	ろｷ	ろｷ	ろｦ	ろｸ	ろｾ	t[!bb95 h.{h[9{/9b/9	{99 [illegible]	[illegible]	[illegible]	[illegible]	[illegible]
Y9Ð!☞[!/Y	[illegible]	!⊡[Y	D/t	t[w	a ⊠						ｾ		ﾆ							ろｸ	ろｾ	t[!bb95 h.{h[9{/9b/9	{99 [illegible]	[illegible]	[illegible]	[illegible]	[illegible]
Y9Ð!☞[!/Y	[illegible]	!⊡[Y	D/t	t[w	a ⊠						ｾ		ﾆ		ろｷ	ろｴ	ろｷ			ろｸ	ろｾ	t[!bb95 h.{h[9{/9b/9	{99 [illegible]	[illegible]	[illegible]	[illegible]	[illegible]
Y9Ð!☞[!/Y	[illegible]	!⊡[Y	D/t	t[w	a ⊠			ｷ	ｦ		ｾ		ﾆ		ろｷ	ろｴ	ろｷ			ろｸ	ろｾ	t[!bb95 h.{h[9{/9b/9	{99 [illegible]	[illegible]	[illegible]	[illegible]	[illegible]
Y9Ð!☞[!/Y	[illegible]	!⊡[Y	D/t	t[w	a ⊠			ｷ	ｦ		ｾ		ﾆ							ろｸ	ろｾ	t[!bb95 h.{h[9{/9b/9	{99 [illegible]	[illegible]	[illegible]	[illegible]	[illegible]
Y9Ð!☞[!/Y	[illegible]	!⊡[Y	D/t	t[w	a ⊠				ｦ				ﾆ		ろｷ					ろｸ	ろｾ	t[!bb95 h.{h[9{/9b/9	{99 [illegible]	[illegible]	[illegible]	[illegible]	[illegible]
Y9Ð!☞[!/Y	[illegible]	!⊡[Y	D/t	t[w	a ⊠								ﾆ							ろｸ	ろｾ	t[!bb95 h.{h[9{/9b/9	{99 [illegible]	[illegible]	[illegible]	[illegible]	[illegible]
Y9Ð!☞[!/Y	[illegible]	!⊡[Y	D/t	t[w	a ⊠				ｦ				ﾆ		ろｷ			ろｷ	ろｦ	ろｸ	ろｾ	t[!bb95 h.{h[9{/9b/9	{99 [illegible]	[illegible]	[illegible]	[illegible]	[illegible]
Y9Ð!☞[!/Y	[illegible]	!⊡[Y	D/t	t[w	a ⊠										ろｷ	ろｴ		ろｷ		ろｸ	ろｾ	t[!bb95 h.{h[9{/9b/9	{99 [illegible]	[illegible]	[illegible]	[illegible]	[illegible]
Y9Ð!☞[!/Y	[illegible]	!⊡[Y	D/t	t[w	a ⊠	ﾐ							ﾆ		ろｷ	ろｴ		ろｷ		ろｸ	ろｾ	t[!bb95 h.{h[9{/9b/9	{99 [illegible]	[illegible]	[illegible]	[illegible]	[illegible]
Y9Ð!☞[!/Y	[illegible]	!⊡[Y	D/t	t[w	a ⊠	ﾐ	ｷ	ｷ	ｦ	ﾇ	ｾ	ｈ	ﾆ		ろｷ	ろｴ		ろｷ		ろｸ	ろｾ	t[!bb95 h.{h[9{/9b/9	{99 [illegible]	[illegible]	[illegible]	[illegible]	[illegible]
Y9Ð!☞[!/Y	[illegible]	!⊡[Y	D/t	t[w	a ⊠	ﾐ	ｷ	ｷ				ｈ					ろｷ	ろｷ			ろｾ	t[!bb95 h.{h[9{/9b/9	{99 [illegible]	[illegible]	[illegible]	[illegible]	[illegible]
Y9Ð!☞[!/Y	[illegible]	!⊡[Y	D/t	t[w	a ⊠			ｷ			ｾ					ろｴ		ろｷ	ろｦ			t[!bb95 h.{h[9{/9b/9	{99 [illegible]	[illegible]	[illegible]	[illegible]	[illegible]
Y9Ð!☞[!/Y	[illegible]	!⊡[Y	D/t	t[w	a ⊠								ﾆ								ろｾ	t[!bb95 h.{h[9{/9b/9	{99 [illegible]	[illegible]	[illegible]	[illegible]	[illegible]
Y9Ð!☞[!/Y	[illegible]	!⊡[Y	D/t	t[w	a ⊠			ｷ			ｾ					ろｴ			ろｦ			t[!bb95 h.{h[9{/9b/9	{99 [illegible]	[illegible]	[illegible]	[illegible]	[illegible]
Y9Ð!☞[!/Y	[illegible]	!⊡[Y	D/t	t[w	a ⊠	ﾐ	ｷ	ｷ	ｦ	ﾇ	ｾ	ｈ	ﾆ		ろｷ	ろｴ	ろｷ	ろｷ	ろｦ	ろｸ		t[!bb95 h.{h[9{/9b/9	{99 [illegible]	[illegible]	[illegible]	[illegible]	[illegible]
Y9Ð!☞[!/Y	[illegible]	!⊡[Y	D/t	t[w	a ⊠	ﾐ	ｷ	ｷ	ｦ	ﾇ		ｈ	ﾆ		ろｷ	ろｴ	ろｷ	ろｷ	ろｦ	ろｸ		t[!bb95 h.{h[9{/9b/9	{99 [illegible]	[illegible]	[illegible]	[illegible]	[illegible]
Y9Ð!☞[!/Y	[illegible]	!⊡[Y	D/t	t[w	a ⊠	ﾐ	ｷ	ｷ				ｈ	ﾆ		ろｷ	ろｴ			ろｦ			t[!bb95 h.{h[9{/9b/9	{99 [illegible]	[illegible]	[illegible]	[illegible]	[illegible]
Y9Ð!☞[!/Y	[illegible]	!⊡[Y	D/t	t[w	a ⊠	ﾐ	ｷ					ｈ	ﾆ		ろｷ				ろｦ			t[!bb95 h.{h[9{/9b/9	{99 [illegible]	[illegible]	[illegible]	[illegible]	[illegible]
Y9Ð!☞[!/Y	[illegible]	!⊡[Y	D/t	t[w	a ⊠		ｷ	ｷ	ｦ	ﾇ		ｈ			ろｷ	ろｴ	ろｷ	ろｷ	ろｦ	ろｸ		t[!bb95 h.{h[9{/9b/9	{99 [illegible]	[illegible]	[illegible]	[illegible]	[illegible]
Y9Ð!☞[!/Y	[illegible]	!⊡[Y	D/t	t[w	a ⊠		ｷ	ｷ				ｈ			ろｷ	ろｴ			ろｦ			t[!bb95 h.{h[9{/9b/9	{99 [illegible]	[illegible]	[illegible]	[illegible]	[illegible]
Y9Ð!☞[!/Y	[illegible]	!⊡[Y	D/t	t[w	a ⊠		ｷ					ｈ			ろｷ				ろｦ			t[!bb95 h.{h[9{/9b/9	{99 [illegible]	[illegible]	[illegible]	[illegible]	[illegible]
Y9Ð!☞[!/Y	[illegible]	!⊡[Y	D/t	t[w	a ⊠	ﾐ	ｷ			ﾇ	ｾ		ﾆ		ろｷ	ろｴ	ろｷ	ろｷ	ろｦ	ろｸ	ろｾ	t[!bb95 h.{h[9{/9b/9	{99 [illegible]	[illegible]	[illegible]	[illegible]	[illegible]
Y9Ð!☞[!/Y	[illegible]	!⊡[Y	D/t	t[w	a ⊠	ﾐ	ｷ									ろｴ	ろｷ	ろｷ	ろｦ	ろｸ	ろｾ	t[!bb95 h.{h[9{/9b/9	{99 [illegible]	[illegible]	[illegible]	[illegible]	[illegible]
Y9Ð!☞[!/Y	[illegible]	!⊡[Y	D/t	t[w	a ⊠	ﾐ	ｷ	ｷ					ﾆ		ろｷ	ろｴ			ろｦ		ろｾ	t[!bb95 h.{h[9{/9b/9	{99 [illegible]	[illegible]	[illegible]	[illegible]	[illegible]
Y9Ð!☞[!/Y	[illegible]	!⊡[Y	D/t	t[w	a ⊠		ｷ	ｷ							ろｷ	ろｴ			ろｦ			t[!bb95 h.{h[9{/9b/9	{99 [illegible]	[illegible]	[illegible]	[illegible]	[illegible]
Y9Ð!☞[!/Y	[illegible]	!⊡[Y	D/t	t[w	a ⊠		ｷ								ろｷ				ろｦ			t[!bb95 h.{h[9{/9b/9	{99 [illegible]	[illegible]	[illegible]	[illegible]	[illegible]
Y9Ð!☞[!/Y	[illegible]	!⊡[Y	D/t	t[w	a ⊠	ﾐ	ｷ	ｷ	ｦ	ﾇ	ｾ	ｈ	ﾆ						ろｦ	ろｸ		t[!bb95 h.{h[9{/9b/9	{99 [illegible]	[illegible]	[illegible]	[illegible]	[illegible]
Y9Ð!☞[!/Y	[illegible]	!⊡[Y	D/t	t[w	a ⊡																	{![9!.[9		[illegible]	[illegible]	[illegible]	[illegible]
Y9Ð.☞ƖDI¤DwƖ Ɛ	[illegible]	.⊡D	D/t	t[w	a ⊡																	{![9!.[9		[illegible]	[illegible]	[illegible]	[illegible]
Y9Ð/☞wh° b	[illegible]	/⊡w	D/t	t[w	a ⊡																	bh¤w9/ha a 9b595	{99 [illegible]	[illegible]	[illegible]	[illegible]	[illegible]
Y9Ð5☞Dw99b	[illegible]	5⊡w	D/t	t[w	a ⊡																	bh¤w9/ha a 9b595	{99 [illegible]	[illegible]	[illegible]	[illegible]	[illegible]
¹hl5 Y9Ɛ	[illegible]																										
Y9Ð!☞[!/Y	[illegible]	!⊡[Y	D/t	t[w	a ⊡								ﾆ									{![9!.[9		[illegible]	[illegible]	[illegible]	[illegible]
Y9Ð.☞ƖDI¤DwƖ Ɛ	[illegible]	.⊡D	D/t	t[w	a ⊡								ﾆ									{![9!.[9		[illegible]	[illegible]	[illegible]	[illegible]
Y9Ð/☞wh° b	[illegible]	/⊡w	D/t	t[w	a ⊡								ﾆ									bh¤w9/ha a 9b595	{99 [illegible]	[illegible]	[illegible]	[illegible]	[illegible]
Y9Ð5☞Dw99b	[illegible]	5⊡w	D/t	t[w	a ⊡								ﾆ									bh¤w9/ha a 9b595	{99 [illegible]	[illegible]	[illegible]	[illegible]	[illegible]
¹hl5 Y9Ɛ	[illegible]																										
Y9Ð!☞[!/Y	[illegible]	!⊡[Y	D/t	t[w	a ⊡								ﾆ									{![9!.[9		[illegible]	[illegible]	[illegible]	[illegible]
Y9Ð.☞ƖDI¤DwƖ Ɛ	[illegible]	.⊡D	D/t	t[w	a ⊡								ﾆ									{![9!.[9		[illegible]	[illegible]	[illegible]	[illegible]
Y9Ð/☞wh° b	[illegible]	/⊡w	D/t	t[w	a ⊡								ﾆ									bh¤w9/ha a 9b595	{99 [illegible]	[illegible]	[illegible]	[illegible]	[illegible]
Y9Ð5☞Dw99b	[illegible]	5⊡w	D/t	t[w	a ⊡								ﾆ									bh¤w9/ha a 9b595	{99 [illegible]	[illegible]	[illegible]	[illegible]	[illegible]
¹hl5 Y9Ɛ	[illegible]																										
Y9Ð!☞[!/Y	[illegible]	!⊡[Y	D/t	t[w	a ⊡	ﾐ							ﾆ									{![9!.[9		[illegible]	[illegible]	[illegible]	[illegible]
Y9Ð.☞ƖDI¤DwƖ Ɛ	[illegible]	.⊡D	D/t	t[w	a ⊡	ﾐ							ﾆ									{![9!.[9		[illegible]	[illegible]	[illegible]	[illegible]
Y9Ð/☞wh° b	[illegible]	/⊡w	D/t	t[w	a ⊡	ﾐ							ﾆ									bh¤w9/ha a 9b595	{99 [illegible]	[illegible]	[illegible]	[illegible]	[illegible]
Y9Ð5☞Dw99b	[illegible]	5⊡w	D/t	t[w	a ⊡	ﾐ							ﾆ									bh¤w9/ha a 9b595	{99 [illegible]	[illegible]	[illegible]	[illegible]	[illegible]
¹hl5 Y9Ɛ	[illegible]																										
Y9Ð!☞[!/Y	[illegible]	!⊡[Y	D/t	t[w	a ⊡	ﾐ	ｷ	ｷ	ｦ	ﾇ	ｾ	ｈ	ﾆ		ろｷ	ろｴ	ろｷ	ろｷ	ろｦ	ろｸ	ろｾ	{![9!.[9		[illegible]	[illegible]	[illegible]	[illegible]
Y9Ð.☞ƖDI¤DwƖ Ɛ	[illegible]	.⊡D	D/t	t[w	a ⊡	ﾐ	ｷ	ｷ	ｦ	ﾇ	ｾ	ｈ	ﾆ		ろｷ	ろｴ	ろｷ	ろｷ	ろｦ	ろｸ	ろｾ	{![9!.[9		[illegible]	[illegible]	[illegible]	[illegible]
Y9Ð/☞wh° b	[illegible]	/⊡w	D/t	t[w	a ⊡	ﾐ	ｷ	ｷ	ｦ	ﾇ	ｾ	ｈ	ﾆ		ろｷ	ろｴ	ろｷ	ろｷ	ろｦ	ろｸ	ろｾ	bh¤w9/ha a 9b595	{99 [illegible]	[illegible]	[illegible]	[illegible]	[illegible]
Y9Ð5☞Dw99b	[illegible]	5⊡w	D/t	t[w	a ⊡	ﾐ	ｷ	ｷ	ｦ	ﾇ	ｾ	ｈ	ﾆ		ろｷ	ろｴ	ろｷ	ろｷ	ろｦ	ろｸ	ろｾ	bh¤w9/ha a 9b595	{99 [illegible]	[illegible]	[illegible]	[illegible]	[illegible]
¹hl5 Y9Ɛ	[illegible]																										
Y9Ð!☞[!/Y	[illegible]	!⊡[Y	D/t	t[w	a ⊡															ろｸ		{![9!.[9		[illegible]	[illegible]	[illegible]	[illegible]
Y9Ð!☞[!/Y	[illegible]	!⊡[Y	D/t	t[w	a ⊡	ﾐ							ﾆ								ろｾ	{![9!.[9		[illegible]	[illegible]	[illegible]	[illegible]
Y9Ð.☞ƖDI¤DwƖ Ɛ	[illegible]	.⊡D	D/t	t[w	a ⊡	ﾐ							ﾆ								ろｾ	{![9!.[9		[illegible]	[illegible]	[illegible]	[illegible]
Y9Ð/☞wh° b	[illegible]	/⊡w	D/t	t[w	a ⊡	ﾐ							ﾆ								ろｾ	bh¤w9/ha a 9b595	{99 [illegible]	[illegible]	[illegible]	[illegible]	[illegible]
Y9Ð5☞Dw99b	[illegible]	5⊡w	D/t	t[w	a ⊡	ﾐ							ﾆ								ろｾ	bh¤w9/ha a 9b595	{99 [illegible]	[illegible]	[illegible]	[illegible]	[illegible]
¹hl5 Y9Ɛ	[illegible]																										
Y9Ð!☞[!/Y	[illegible]	!⊡[Y	D/t	t[w	a ⊡				ｦ			ｈ	ﾆ				ろｷ	ろｷ	ろｦ			{![9!.[9		[illegible]	[illegible]	[illegible]	[illegible]
Y9Ð!☞[!/Y	[illegible]	!⊡[Y	D/t	t[w	a ⊡			ｷ	ｦ	ﾇ					ろｷ	ろｴ	ろｷ	ろｷ	ろｦ	ろｸ	ろｾ	{![9!.[9		[illegible]	[illegible]	[illegible]	[illegible]
Y9Ð!☞[!/Y	[illegible]	!⊡[Y	D/t	t[w	a ⊡							ｈ	ﾆ				ろｷ	ろｷ	ろｦ			{![9!.[9		[illegible]	[illegible]	[illegible]	[illegible]
Y9Ð.☞ƖDI¤DwƖ Ɛ	[illegible]	.⊡D	D/t	t[w	a ⊡								ﾆ					ろｷ	ろｦ	ろｸ	ろｾ	{![9!.[9		[illegible]	[illegible]	[illegible]	[illegible]
Y9Ð!☞[!/Y	[illegible]	!⊡[Y	D/t	t[w	a ⊡										ろｷ	ろｴ		ろｷ	ろｦ	ろｸ	ろｾ	{![9!.[9		[illegible]	[illegible]	[illegible]	[illegible]
Y9Ð!☞[!/Y	[illegible]	!⊡[Y	D/t	t[w	a ⊡										ろｷ	ろｴ				ろｸ	ろｾ	{![9!.[9		[illegible]	[illegible]	[illegible]	[illegible]
Y9Ð!☞[!/Y	[illegible]	!⊡[Y	D/t	t[w	a ⊡								ﾆ		ろｷ	ろｴ	ろｷ			ろｸ	ろｾ	{![9!.[9		[illegible]	[illegible]	[illegible]	[illegible]
Y9Ð!☞[!/Y	[illegible]	!⊡[Y	D/t	t[w	a ⊡															ろｸ		{![9!.[9		[illegible]	[illegible]	[illegible]	[illegible]

a A-ろゑれゎA-ゔ . [! 5 9{9! [95 ! {{Đa ! ¤{9! [
. ha ! b5 t Lb h- ¤{I 99¤

! {{9a . [Đ5 9{/wLt¤Lhb	! {{9a . [Đt! w¤ b- a . 9w	/ha thb9b¤ ¤I 9 tw9{9b/9hC! b! . . w9¹ L! ¤Lhb Lb5L/! ¤9{ ¤I 9 tw9{9b/9hC¤I ! ¤/ha thb9b¤♔				. [h/Y95 ¤9wa Lb! [{ /! ¹ L¤Đº L¤I ! b- a . 9wLb5L/! ¤9{ . [h/Y95 ¤9wa Lb! [th{L¤Lhb /! ¹ L¤Đº L¤I h- ¤! b- a . 9wLb5L/! ¤9{ ht9b ¤9wa Lb! [th{L¤Lhb																{¤! ¤- {	/ha a 9b¤{	ht¤Lhb! [! ¤¤! ¤/I a 9b¤{ {h[5 {9t9w! ¤9[Đ			
		I h- {LbD Y9Đ/Lh[hw	Dwha a 9¤ /! t	t[w	a ! ¤{9! [	ろ	ゎ	わ	ゐ	ゑ	を	ん	ゔ	`	ろれ	ろろ	ろゎ	ろわ	ろゐ	ろゑ	ろを			. ! /Y{I 9[[º L¤I wL {	. ! /Y{I 9[[º L¤I h- ¤ wL {	れ! 5! t¤hwº L¤I wL {	れ! 5! t¤hwº L¤I h- ¤ wL {
Y9Đ! ☞[! /Y	[illegible]	! ⊡[Y	D/t	t[w	a ⊡					ゑ											ろを	{! [9! . [9		[illegible]	[illegible]	[illegible]	[illegible]
Y9Đ! ☞[! /Y	[illegible]	! ⊡[Y	D/t	t[w	a ⊡					ゑ												{! [9! . [9		[illegible]	[illegible]	[illegible]	[illegible]
Y9Đ. ☞LDI ¤ DwL Ɛ	[illegible]	. ⊡D	D/t	t[w	a ⊡				∂		を	ん	ニ				ろォ		ろあ			{! [9! . [9		[illegible]	[illegible]	[illegible]	[illegible]
Y9Đ! ☞[! /Y	[illegible]	! ⊡[Y	D/t	t[w	a ⊡															ろゑ	ろを	{! [9! . [9		[illegible]	[illegible]	[illegible]	[illegible]
Y9Đ. ☞LDI ¤ DwL Ɛ	[illegible]	. ⊡D	D/t	t[w	a ⊡				∂													{! [9! . [9		[illegible]	[illegible]	[illegible]	[illegible]
Y9Đ. ☞LDI ¤ DwL Ɛ	[illegible]	. ⊡D	D/t	t[w	a ⊡				∂		を	ん	ニ									{! [9! . [9		[illegible]	[illegible]	[illegible]	[illegible]
Y9Đ! ☞[! /Y	[illegible]	! ⊡[Y	D/t	t[w	a ⊡				∂		を	ん	ニ				ろォ					{! [9! . [9		[illegible]	[illegible]	[illegible]	[illegible]
Y9Đ! ☞[! /Y	[illegible]	! ⊡[Y	D/t	t[w	a ⊡																ろを	{! [9! . [9		[illegible]	[illegible]	[illegible]	[illegible]
Y9Đ! ☞[! /Y	[illegible]	! ⊡[Y	D/t	t[w	a ⊡				∂								ろォ					{! [9! . [9		[illegible]	[illegible]	[illegible]	[illegible]
Y9Đ. ☞LDI ¤ DwL Ɛ	[illegible]	. ⊡D	D/t	t[w	a ⊡																ろを	{! [9! . [9		[illegible]	[illegible]	[illegible]	[illegible]
Y9Đ. ☞LDI ¤ DwL Ɛ	[illegible]	. ⊡D	D/t	t[w	a ⊡				∂								ろォ		ろあ			{! [9! . [9		[illegible]	[illegible]	[illegible]	[illegible]
Y9Đ. ☞LDI ¤ DwL Ɛ	[illegible]	. ⊡D	D/t	t[w	a ⊡														ろあ			{! [9! . [9		[illegible]	[illegible]	[illegible]	[illegible]
Y9Đ. ☞LDI ¤ DwL Ɛ	[illegible]	. ⊡D	D/t	t[w	a ⊡						を	ん	ニ						ろあ			{! [9! . [9		[illegible]	[illegible]	[illegible]	[illegible]
Y9Đ! ☞[! /Y	[illegible]	! ⊡[Y	D/t	t[w	a ⊡															ろゑ		{! [9! . [9		[illegible]	[illegible]	[illegible]	[illegible]
Y9Đ! ☞[! /Y	[illegible]	! ⊡[Y	D/t	t[w	a ⊡				∂				ニ				ろォ					{! [9! . [9		[illegible]	[illegible]	[illegible]	[illegible]
Y9Đ. ☞LDI ¤ DwL Ɛ	[illegible]	. ⊡D	D/t	t[w	a ⊡				∂				ニ				ろォ		ろあ			{! [9! . [9		[illegible]	[illegible]	[illegible]	[illegible]
Y9Đ. ☞LDI ¤ DwL Ɛ	[illegible]	. ⊡D	D/t	t[w	a ⊡								ニ						ろあ			{! [9! . [9		[illegible]	[illegible]	[illegible]	[illegible]
Y9Đ! ☞[! /Y	[illegible]	! ⊡[Y	D/t	t[w	a ⊡	ミ						ん										{! [9! . [9		[illegible]	[illegible]	[illegible]	[illegible]
Y9Đ. ☞LDI ¤ DwL Ɛ	[illegible]	. ⊡D	D/t	t[w	a ⊡		ｫ		∂		を	ん	ニ				ろォ		ろあ			{! [9! . [9		[illegible]	[illegible]	[illegible]	[illegible]
Y9Đ. ☞LDI ¤ DwL Ɛ	[illegible]	. ⊡D	D/t	t[w	a ⊡		ｫ				を	ん	ニ						ろあ			{! [9! . [9		[illegible]	[illegible]	[illegible]	[illegible]
Y9Đ. ☞LDI ¤ DwL Ɛ	[illegible]	. ⊡D	D/t	t[w	a ⊡		ｫ						ニ						ろあ			{! [9! . [9		[illegible]	[illegible]	[illegible]	[illegible]
Y9Đ! ☞[! /Y	[illegible]	! ⊡[Y	D/t	t[w	a ⊡		ｫ		∂				ニ				ろォ					{! [9! . [9		[illegible]	[illegible]	[illegible]	[illegible]
Y9Đ. ☞LDI ¤ DwL Ɛ	[illegible]	. ⊡D	D/t	t[w	a ⊡		ｫ		∂				ニ						ろあ			{! [9! . [9		[illegible]	[illegible]	[illegible]	[illegible]
Y9Đ! ☞[! /Y	[illegible]	! ⊡[Y	D/t	t[w	a ⊡		ｫ						ニ									{! [9! . [9		[illegible]	[illegible]	[illegible]	[illegible]
Y9Đ! ☞[! /Y	[illegible]	! ⊡[Y	D/t	t[w	a ⊡			ｵ					ニ		ろオ	ろエ				ろゑ	ろを	{! [9! . [9		[illegible]	[illegible]	[illegible]	[illegible]
Y9Đ! ☞[! /Y	[illegible]	! ⊡[Y	D/t	t[w	a ⊡			ｵ	∂	ゑ	を	ん	ニ		ろオ	ろエ				ろゑ	ろを	{! [9! . [9		[illegible]	[illegible]	[illegible]	[illegible]
Y9Đ! ☞[! /Y	[illegible]	! ⊡[Y	D/t	t[w	a ⊡		ｫ				を	ん	ニ		ろオ			ろオ	ろあ	ろゑ	ろを	{! [9! . [9		[illegible]	[illegible]	[illegible]	[illegible]
Y9Đ! ☞[! /Y	[illegible]	! ⊡[Y	D/t	t[w	a ⊡		ｫ			ゑ	を				ろオ			ろオ	ろあ	ろゑ	ろを	{! [9! . [9		[illegible]	[illegible]	[illegible]	[illegible]
Y9Đ! ☞[! /Y	[illegible]	! ⊡[Y	D/t	t[w	a ⊡		ｫ			ゑ	を				ろオ	ろエ		ろオ	ろあ	ろゑ	ろを	{! [9! . [9		[illegible]	[illegible]	[illegible]	[illegible]
Y9Đ! ☞[! /Y	[illegible]	! ⊡[Y	D/t	t[w	a ⊡		ｫ				を				ろオ			ろオ	ろあ			{! [9! . [9		[illegible]	[illegible]	[illegible]	[illegible]
Y9Đ! ☞[! /Y	[illegible]	! ⊡[Y	D/t	t[w	a ⊡		ｫ		∂	ゑ	を	ん	ニ		ろオ	ろエ	ろォ	ろオ	ろあ			{! [9! . [9		[illegible]	[illegible]	[illegible]	[illegible]
Y9Đ! ☞[! /Y	[illegible]	! ⊡[Y	D/t	t[w	a ⊡		ｫ		∂	ゑ	を				ろオ		ろォ	ろオ	ろあ			{! [9! . [9		[illegible]	[illegible]	[illegible]	[illegible]
Y9Đ! ☞[! /Y	[illegible]	! ⊡[Y	D/t	t[w	a ⊡				∂				ニ									{! [9! . [9		[illegible]	[illegible]	[illegible]	[illegible]
Y9Đ! ☞[! /Y	[illegible]	! ⊡[Y	D/t	t[w	a ⊡		ｫ				を	ん	ニ									{! [9! . [9		[illegible]	[illegible]	[illegible]	[illegible]
Y9Đ! ☞[! /Y	[illegible]	! ⊡[Y	D/t	t[w	a ⊡		ｫ			ゑ	を											{! [9! . [9		[illegible]	[illegible]	[illegible]	[illegible]
Y9Đ! ☞[! /Y	[illegible]	! ⊡[Y	D/t	t[w	a ⊡		ｫ			ゑ	を					ろエ						{! [9! . [9		[illegible]	[illegible]	[illegible]	[illegible]
Y9Đ! ☞[! /Y	[illegible]	! ⊡[Y	D/t	t[w	a ⊡					ゑ	を	ん	ニ					ろオ				{! [9! . [9		[illegible]	[illegible]	[illegible]	[illegible]
Y9Đ! ☞[! /Y	[illegible]	! ⊡[Y	D/t	t[w	a ⊡					ゑ	を	ん	ニ			ろエ		ろオ				{! [9! . [9		[illegible]	[illegible]	[illegible]	[illegible]
Y9Đ! ☞[! /Y	[illegible]	! ⊡[Y	D/t	t[w	a ⊡					ゑ	を	ん	ニ				ろォ	ろオ	ろあ			{! [9! . [9		[illegible]	[illegible]	[illegible]	[illegible]
Y9Đ! ☞[! /Y	[illegible]	! ⊡[Y	D/t	t[w	a ⊡					ゑ	を	ん	ニ			ろエ	ろォ	ろオ	ろあ			{! [9! . [9		[illegible]	[illegible]	[illegible]	[illegible]
Y9Đ! ☞[! /Y	[illegible]	! ⊡[Y	D/t	t[w	a ⊡					ゑ	を	ん	ニ			ろエ	ろォ	ろオ	ろあ	ろゑ		{! [9! . [9		[illegible]	[illegible]	[illegible]	[illegible]
Y9Đ! ☞[! /Y	[illegible]	! ⊡[Y	D/t	t[w	a ⊡							ん								ろゑ		{! [9! . [9		[illegible]	[illegible]	[illegible]	[illegible]
Y9Đ! ☞[! /Y	[illegible]	! ⊡[Y	D/t	t[w	a ⊡				∂	ゑ	を									ろゑ	ろを	{! [9! . [9		[illegible]	[illegible]	[illegible]	[illegible]
Y9Đ! ☞[! /Y	[illegible]	! ⊡[Y	D/t	t[w	a ⊡			ｵ	∂	ゑ	を									ろゑ	ろを	{! [9! . [9		[illegible]	[illegible]	[illegible]	[illegible]
Y9Đ! ☞[! /Y	[illegible]	! ⊡[Y	D/t	t[w	a ⊡	ミ	ｫ	ｵ	∂	ゑ	を		ニ					ろオ		ろゑ	ろを	{! [9! . [9		[illegible]	[illegible]	[illegible]	[illegible]
Y9Đ! ☞[! /Y	[illegible]	! ⊡[Y	D/t	t[w	a ⊡													ろオ	ろあ	ろゑ	ろを	{! [9! . [9		[illegible]	[illegible]	[illegible]	[illegible]
Y9Đ! ☞[! /Y	[illegible]	! ⊡[Y	D/t	t[w	a ⊡								ニ					ろオ	ろあ	ろゑ	ろを	{! [9! . [9		[illegible]	[illegible]	[illegible]	[illegible]
Y9Đ! ☞[! /Y	[illegible]	! ⊡[Y	D/t	t[w	a ⊡							ん	ニ			ろエ	ろォ	ろオ	ろあ	ろゑ		{! [9! . [9		[illegible]	[illegible]	[illegible]	[illegible]
Y9Đ! ☞[! /Y	[illegible]	! ⊡[Y	D/t	t[w	a ⊡							ん	ニ				ろォ	ろオ	ろあ	ろゑ		{! [9! . [9		[illegible]	[illegible]	[illegible]	[illegible]
Y9Đ! ☞[! /Y	[illegible]	! ⊡[Y	D/t	t[w	a ⊡							ん	ニ			ろエ		ろオ				{! [9! . [9		[illegible]	[illegible]	[illegible]	[illegible]
Y9Đ! ☞[! /Y	[illegible]	! ⊡[Y	D/t	t[w	a ⊡							ん	ニ					ろオ				{! [9! . [9		[illegible]	[illegible]	[illegible]	[illegible]
Y9Đ! ☞[! /Y	[illegible]	! ⊡[Y	D/t	t[w	a ⊡					ゑ								ろオ				{! [9! . [9		[illegible]	[illegible]	[illegible]	[illegible]
Y9Đ! ☞[! /Y	[illegible]	! ⊡[Y	D/t	t[w	a ⊡		ｫ								ろオ					ろゑ	ろを	{! [9! . [9		[illegible]	[illegible]	[illegible]	[illegible]
Y9Đ! ☞[! /Y	[illegible]	! ⊡[Y	D/t	t[w	a ⊡		ｫ								ろオ					ろゑ		{! [9! . [9		[illegible]	[illegible]	[illegible]	[illegible]
Y9Đ! ☞[! /Y	[illegible]	! ⊡[Y	D/t	t[w	a ⊡		ｫ			ゑ	を	ん	ニ		ろオ		ろォ		ろあ	ろゑ	ろを	{! [9! . [9		[illegible]	[illegible]	[illegible]	[illegible]
Y9Đ! ☞[! /Y	[illegible]	! ⊡[Y	D/t	t[w	a ⊡		ｫ			ゑ	を	ん	ニ		ろオ		ろォ		ろあ	ろゑ		{! [9! . [9		[illegible]	[illegible]	[illegible]	[illegible]
Y9Đ! ☞[! /Y	[illegible]	! ⊡[Y	D/t	t[w	a ⊡	ミ	ｫ	ｵ	∂	ゑ	を				ろオ	ろエ	ろォ	ろオ	ろあ	ろゑ	ろを	{! [9! . [9		[illegible]	[illegible]	[illegible]	[illegible]
Y9Đ! ☞[! /Y	[illegible]	! ⊡[Y	D/t	t[w	a ⊡	ミ	ｫ	ｵ	∂	ゑ	を					ろエ	ろォ	ろオ	ろあ	ろゑ	ろを	{! [9! . [9		[illegible]	[illegible]	[illegible]	[illegible]
Y9Đ! ☞[! /Y	[illegible]	! ⊡[Y	D/t	t[w	a ⊡							ん	ニ		ろオ	ろエ	ろォ	ろオ	ろあ	ろゑ	ろを	{! [9! . [9		[illegible]	[illegible]	[illegible]	[illegible]
Y9Đ! ☞[! /Y	[illegible]	! ⊡[Y	D/t	t[w	a ⊡								ニ		ろオ	ろエ	ろォ	ろオ	ろあ	ろゑ	ろを	{! [9! . [9		[illegible]	[illegible]	[illegible]	[illegible]
Y9Đ! ☞[! /Y	[illegible]	! ⊡[Y	D/t	t[w	a ⊡	ミ	ｫ	ｵ	∂	ゑ	を								ろあ	ろゑ	ろを	{! [9! . [9		[illegible]	[illegible]	[illegible]	[illegible]
Y9Đ! ☞[! /Y	[illegible]	! ⊡[Y	D/t	t[w	a ⊡										ろオ	ろエ	ろォ	ろオ	ろあ	ろゑ	ろを	{! [9! . [9		[illegible]	[illegible]	[illegible]	[illegible]
Y9Đ! ☞[! /Y	[illegible]	! ⊡[Y	D/t	t[w	a ⊡											ろエ	ろォ	ろオ	ろあ	ろゑ	ろを	{! [9! . [9		[illegible]	[illegible]	[illegible]	[illegible]
Y9Đ! ☞[! /Y	[illegible]	! ⊡[Y	D/t	t[w	a ⊡							ん	ニ		ろオ							{! [9! . [9		[illegible]	[illegible]	[illegible]	[illegible]
Y9Đ! ☞[! /Y	[illegible]	! ⊡[Y	D/t	t[w	a ⊡														ろあ	ろゑ	ろを	{! [9! . [9		[illegible]	[illegible]	[illegible]	[illegible]
Y9Đ! ☞[! /Y	[illegible]	! ⊡[Y	D/t	t[w	a ⊡												ろォ	ろオ	ろあ	ろゑ	ろを	{! [9! . [9		[illegible]	[illegible]	[illegible]	[illegible]
Y9Đ! ☞[! /Y	[illegible]	! ⊡[Y	D/t	t[w	a ⊡	ミ	ｫ	ｵ	∂	ゑ	を	ん	ニ		ろオ							{! [9! . [9		[illegible]	[illegible]	[illegible]	[illegible]
Y9Đ. ☞LDI ¤ DwL Ɛ	[illegible]	. ⊡D	D/t	t[w	a ⊡	ミ	ｫ	ｵ	∂	ゑ	を	ん	ニ		ろオ		ろォ		ろあ	ろゑ	ろを	{! [9! . [9		[illegible]	[illegible]	[illegible]	[illegible]
Y9Đ. ☞LDI ¤ DwL Ɛ	[illegible]	. ⊡D	D/t	t[w	a ⊡	ミ	ｫ	ｵ	∂		を	ん	ニ		ろオ		ろォ		ろあ	ろゑ		{! [9! . [9		[illegible]	[illegible]	[illegible]	[illegible]
Y9Đ! ☞[! /Y	[illegible]	! ⊡[Y	D/t	t[w	a ⊡		ｫ	ｵ	∂						ろオ					ろゑ	ろを	{! [9! . [9		[illegible]	[illegible]	[illegible]	[illegible]
Y9Đ! ☞[! /Y	[illegible]	! ⊡[Y	D/t	t[w	a ⊡		ｫ	ｵ	∂	ゑ	を	ん	ニ		ろオ		ろォ		ろあ	ろゑ	ろを	{! [9! . [9		[illegible]	[illegible]	[illegible]	[illegible]
Y9Đ! ☞[! /Y	[illegible]	! ⊡[Y	D/t	t[w	a ⊡	ミ	ｫ	ｵ	∂			ん	ニ		ろオ	ろエ	ろォ			ろゑ	ろを	{! [9! . [9		[illegible]	[illegible]	[illegible]	[illegible]
Y9Đ! ☞[! /Y	[illegible]	! ⊡[Y	D/t	t[w	a ⊡	ミ	ｫ	ｵ	∂				ニ		ろオ	ろエ	ろォ				ろを	{! [9! . [9		[illegible]	[illegible]	[illegible]	[illegible]
Y9Đ! ☞[! /Y	[illegible]	! ⊡[Y	D/t	t[w	a ⊡	ミ	ｫ	ｵ	∂	ゑ	を	ん	ニ					ろオ	ろあ	ろゑ	ろを	{! [9! . [9		[illegible]	[illegible]	[illegible]	[illegible]
Y9Đ! ☞[! /Y	[illegible]	! ⊡[Y	D/t	t[w	a ⊡													ろオ	ろあ	ろゑ	ろを	{! [9! . [9		[illegible]	[illegible]	[illegible]	[illegible]
Y9Đ! ☞[! /Y	[illegible]	! ⊡[Y	D/t	t[w	a ⊡	ミ				ゑ		ん	ニ		ろオ	ろエ			ろあ	ろゑ		{! [9! . [9		[illegible]	[illegible]	[illegible]	[illegible]
Y9Đ! ☞[! /Y	[illegible]	! ⊡[Y	D/t	t[w	a ⊡												ろォ		ろあ			{! [9! . [9		[illegible]	[illegible]	[illegible]	[illegible]
Y9Đ. ☞LDI ¤ DwL Ɛ	[illegible]	. ⊡D	D/t	t[w	a ⊡				∂		を	ん	ニ			ろエ	ろォ	ろオ	ろあ			{! [9! . [9		[illegible]	[illegible]	[illegible]	[illegible]
Y9Đ. ☞LDI ¤ DwL Ɛ	[illegible]	. ⊡D	D/t	t[w	a ⊡	ミ	ｫ	ｵ	∂		を	ん	ニ		ろオ	ろエ	ろォ	ろオ	ろあ	ろゑ		{! [9! . [9		[illegible]	[illegible]	[illegible]	[illegible]
Y9Đ! ☞[! /Y	[illegible]	! ⊡[Y	D/t	t[w	a ⊡	ミ	ｫ	ｵ	∂	ゑ	を							ろオ	ろあ	ろゑ	ろを	{! [9! . [9		[illegible]	[illegible]	[illegible]	[illegible]
Y9Đ! ☞[! /Y	[illegible]	! ⊡[Y	D/t	t[w	a ⊡														ろあ	ろゑ		{! [9! . [9		[illegible]	[illegible]	[illegible]	[illegible]
Y9Đ/☞5! wY DwL Ɛ	[illegible]	/ ⊡5D	D/t	t[w	a ⊡																	{! [9! . [9		[illegible]	[illegible]	[illegible]	[illegible]
Y9Đ5☞{¤hb9 DwL Ɛ	[illegible]	5⊡D	D/t	t[w	a ⊡																	{! [9! . [9		[illegible]	[illegible]	[illegible]	[illegible]
Y9Đ/☞5! wY DwL Ɛ	[illegible]	/ ⊡5D	D/t	t[w	a ⊡	ミ	ｫ	ｵ	∂	ゑ	を	ん	ニ		ろオ	ろエ	ろォ	ろオ	ろあ	ろゑ	ろを	{! [9! . [9		[illegible]	[illegible]	[illegible]	[illegible]
Y9Đ5☞{¤hb9 DwL Ɛ	[illegible]	5⊡D	D/t	t[w	a ⊡	ミ	ｫ	ｵ	∂	ゑ	を	ん	ニ		ろオ	ろエ	ろォ	ろオ	ろあ	ろゑ	ろを	{! [9! . [9		[illegible]	[illegible]	[illegible]	[illegible]
Y9Đ! ☞[! /Y	[illegible]	! ⊡[Y	D/t	t[w	a ⊡								ニ				ろォ	ろオ	ろあ	ろゑ	ろを	{! [9! . [9		[illegible]	[illegible]	[illegible]	[illegible]
Y9Đ! ☞[! /Y	[illegible]	! ⊡[Y	D/t	t[w	a ⊡				∂	ゑ	を	ん	ニ		ろオ	ろエ	ろォ	ろオ	ろあ	ろゑ	ろを	{! [9! . [9		[illegible]	[illegible]	[illegible]	[illegible]
Y9Đ! ☞[! /Y	[illegible]	! ⊡[Y	D/t	t[w	a ⊡										ろオ	ろエ	ろォ	ろオ	ろあ	ろゑ	ろを	{! [9! . [9		[illegible]	[illegible]	[illegible]	[illegible]
Y9Đ. ☞LDI ¤ DwL Ɛ	[illegible]	. ⊡D	D/t	t[w	a ⊡						を	ん	ニ			ろエ						{! [9! . [9		[illegible]	[illegible]	[illegible]	[illegible]
Y9Đ. ☞LDI ¤ DwL Ɛ	[illegible]	. ⊡D	D/t	t[w	a ⊡	ミ	ｫ	ｵ	∂	ゑ	を				ろオ	ろエ	ろォ	ろオ	ろあ	ろゑ	ろを	{! [9! . [9		[illegible]	[illegible]	[illegible]	[illegible]
Y9Đ. ☞LDI ¤ DwL Ɛ	[illegible]	. ⊡D	D/t	t[w	a ⊡						を					ろエ	ろォ	ろオ		ろゑ	ろを	{! [9! . [9		[illegible]	[illegible]	[illegible]	[illegible]
Y9Đ! ☞[! /Y	[illegible]	! ⊡[Y	D/t	t[w	a ⊡						を				ろオ	ろエ	ろォ	ろオ	ろあ			{! [9! . [9		[illegible]	[illegible]	[illegible]	[illegible]

!{{9a.[Ð59(/wlt¤lhb	!{{9a.[Ðt!w¤ b-a.9w	/ha thb9b¤				.[h/Y95¤9wa lb![{																{¤!¤-{	/ha a9b¤{	ht¤lhb![!¤¤!¤/Ia9b¤{{h[5{9t9wl¤9[Ð			
		¤I9tw9{9b/9hC!b!..w9'll¤lhb lb5l/!¤9{¤I9tw9{9b/9hC¤!¤/ha thb9b¤☆				/!'!¤Ð°¤I!b-a.9wlb5l/!¤9{.[h/Y95¤9wa lb![th{l¤lhb /!'!¤Ð°¤I!h-¤!b-a.9wlb5l/!¤9{ht9b¤9wa lb![th{l¤lhb																			
		I h-{lbD Y9Ðll/h[hw	Dwha a9¤ /!t	t[w	a!¤{9![	ろ	わ	わ	ゐ	ゑ	を	ん	ゔ	゛	ゕれ	ゕろ	ゕわ	ゕわ	ゕゐ	ゕゑ	ゕを			わゐ゛ゐ゜	わゐ゛ゐ゜	わゐ゛ゑ゜	わゐ゛ゑ゜
Y9Ð!¤[!/Y	ゖゐゔゕゔゖ	!□[Y	D/t	t[w	a□	ゔ	゛	゛	ゐ	ゑ	ゑ							ゕ゛	ゕ゛			{!![9!.[9		わゐ゛ゐ゜	わゐ゛ゐ゜	わゐ゛ゑ゜	わゐ゛ゑ゜
Y9Ð!¤[!/Y	ゖゐゔゕゔ゗	!□[Y	D/t	t[w	a□	ゔ	゛	゛	ゐ	ゑ	ゑ				ゕ゛	ゕ゜	ゕ゛	ゕ゛	ゕ゛			{!![9!.[9		わゐ゛ゐ゜	わゐ゛ゐ゜	わゐ゛ゑ゜	わゐ゛ゑ゜
Y9Ð!¤[!/Y	ゖゐゔゕゔ゘	!□[Y	D/t	t[w	a□	ゔ	゛		ゐ	ゑ	ゑ	ゕ	ゔ゛									{!![9!.[9		わゐ゛ゐ゜	わゐ゛ゐ゜	わゐ゛ゑ゜	わゐ゛ゑ゜
Y9Ð!¤[!/Y	ゖゐゔゕゔ゙	!□[Y	D/t	t[w	a□			゛	ゐ							ゕ゜	ゕ゛					{!![9!.[9		わゐ゛ゐ゜	わゐ゛ゐ゜	わゐ゛ゑ゜	わゐ゛ゑ゜
Y9Ð!¤[!/Y	ゖゐゔゕゔ゚	!□[Y	D/t	t[w	a□													ゕ゛	ゕ゛	ゕ゛	ゕ゜	{!![9!.[9		わゐ゛ゐ゜	わゐ゛ゐ゜	わゐ゛ゑ゜	わゐ゛ゑ゜
Y9Ð!¤[!/Y	ゖゐゔゕゔ゛	!□[Y	D/t	t[w	a□			゛	ゐ						ゕれ	ゕ゜	ゕ゛	ゕ゛	ゕ゛			{!![9!.[9		わゐ゛ゐ゜	わゐ゛ゐ゜	わゐ゛ゑ゜	わゐ゛ゑ゜
Y9Ð!¤[!/Y	ゖゐゔゕゔ゜	!□[Y	D/t	t[w	a□											ゕ゜			ゕ゛			{!![9!.[9		わゐ゛ゐ゜	わゐ゛ゐ゜	わゐ゛ゑ゜	わゐ゛ゑ゜
Y9Ð!¤[!/Y	ゖゐゔゕゕ	!□[Y	D/t	t[w	a□		゛					ゕ				ゕ゜	ゕ゛	ゕ゛	ゕ゛		ゕ゜	{!![9!.[9		わゐ゛ゐ゜	わゐ゛ゐ゜	わゐ゛ゑ゜	わゐ゛ゑ゜
Y9Ð!¤[!/Y	ゖゐゔゕゕ゗	!□[Y	D/t	t[w	a□		゛															{!![9!.[9		わゐ゛ゐ゜	わゐ゛ゐ゜	わゐ゛ゑ゜	わゐ゛ゑ゜
Y9Ð!¤[!/Y	ゖゐゔゕゕ゘	!□[Y	D/t	t[w	a□		゛															{!![9!.[9		わゐ゛ゐ゜	わゐ゛ゐ゜	わゐ゛ゑ゜	わゐ゛ゑ゜
Y9Ð!¤[!/Y	ゖゐゔゕゕ゙	!□[Y	D/t	t[w	a□																	{!![9!.[9		わゐ゛ゐ゜	わゐ゛ゐ゜	わゐ゛ゑ゜	わゐ゛ゑ゜
Y9Ð!¤[!/Y	ゖゐゔゕゕ゚	!□[Y	D/t	t[w	a□																	{!![9!.[9		わゐ゛ゐ゜	わゐ゛ゐ゜	わゐ゛ゑ゜	わゐ゛ゑ゜
Y9Ð!¤[!/Y	ゖゐゔゕゖ	!□[Y	D/t	t[w	a□																	{!![9!.[9		わゐ゛ゐ゜	わゐ゛ゐ゜	わゐ゛ゑ゜	わゐ゛ゑ゜
Y9Ð!¤[!/Y	ゖゐゔゕゖ゗	!□[Y	D/t	t[w	a□																	{!![9!.[9		わゐ゛ゐ゜	わゐ゛ゐ゜	わゐ゛ゑ゜	わゐ゛ゑ゜
Y9Ð!¤[!/Y	ゖゐゔゕゖ゘	!□[Y	D/t	t[w	a□		゛					ゕ										{!![9!.[9		わゐ゛ゐ゜	わゐ゛ゐ゜	わゐ゛ゑ゜	わゐ゛ゑ゜
Y9Ð!¤[!/Y	ゖゐゔゕゖ゙	!□[Y	D/t	t[w	a□		゛					ゕ										{!![9!.[9		わゐ゛ゐ゜	わゐ゛ゐ゜	わゐ゛ゑ゜	わゐ゛ゑ゜
Y9Ð!¤[!/Y	ゖゐゔゕゖ゚	!□[Y	D/t	t[w	a□							ゕ										{!![9!.[9		わゐ゛ゐ゜	わゐ゛ゐ゜	わゐ゛ゑ゜	わゐ゛ゑ゜
Y9Ð!¤[!/Y	ゖゐゔゕ゗	!□[Y	D/t	t[w	a□							ゕ										{!![9!.[9		わゐ゛ゐ゜	わゐ゛ゐ゜	わゐ゛ゑ゜	わゐ゛ゑ゜
Y9Ð!¤[!/Y	ゖゐゔゕ゗゙	!□[Y	D/t	t[w	a□							ゕ										{!![9!.[9		わゐ゛ゐ゜	わゐ゛ゐ゜	わゐ゛ゑ゜	わゐ゛ゑ゜
Y9Ð!¤[!/Y	ゖゐゔゕ゗゚	!□[Y	D/t	t[w	a□							ゕ										{!![9!.[9		わゐ゛ゐ゜	わゐ゛ゐ゜	わゐ゛ゑ゜	わゐ゛ゑ゜
Y9Ð!¤[!/Y	ゖゐゔゕ゘	!□[Y	D/t	t[w	a□							ゕ										{!![9!.[9		わゐ゛ゐ゜	わゐ゛ゐ゜	わゐ゛ゑ゜	わゐ゛ゑ゜
Y9Ð!¤[!/Y	ゖゐゔゕ゘゙	!□[Y	D/t	t[w	a□							ゕ										{!![9!.[9		わゐ゛ゐ゜	わゐ゛ゐ゜	わゐ゛ゑ゜	わゐ゛ゑ゜
Y9Ð!¤[!/Y	ゖゐゔゕ゘゚	!□[Y	D/t	t[w	a□							ゕ										{!![9!.[9		わゐ゛ゐ゜	わゐ゛ゐ゜	わゐ゛ゑ゜	わゐ゛ゑ゜
Y9Ð!¤[!/Y	ゖゐゔゕ゙	!□[Y	D/t	t[w	a□																	{!![9!.[9		わゐ゛ゐ゜	わゐ゛ゐ゜	わゐ゛ゑ゜	わゐ゛ゑ゜
Y9Ð!¤[!/Y	ゖゐゔゕ゙゛	!□[Y	D/t	t[w	a□																	{!![9!.[9		わゐ゛ゐ゜	わゐ゛ゐ゜	わゐ゛ゑ゜	わゐ゛ゑ゜
Y9Ð!¤[!/Y	ゖゐゔゕ゙゜	!□[Y	D/t	t[w	a□																	{!![9!.[9		わゐ゛ゐ゜	わゐ゛ゐ゜	わゐ゛ゑ゜	わゐ゛ゑ゜
Y9Ð!¤[!/Y	ゖゐゔゕ゛	!□[Y	D/t	t[w	a□																	{!![9!.[9		わゐ゛ゐ゜	わゐ゛ゐ゜	わゐ゛ゑ゜	わゐ゛ゑ゜
Y9Ð!¤[!/Y	ゖゐゔゕ゛゛	!□[Y	D/t	t[w	a□																	{!![9!.[9		わゐ゛ゐ゜	わゐ゛ゐ゜	わゐ゛ゑ゜	わゐ゛ゑ゜
Y9Ð!¤[!/Y	ゖゐゔゕ゛゜	!□[Y	D/t	t[w	a□																	{!![9!.[9		わゐ゛ゐ゜	わゐ゛ゐ゜	わゐ゛ゑ゜	わゐ゛ゑ゜
Y9Ð!¤[!/Y	ゖゐゔゕ゜	!□[Y	D/t	t[w	a□																	{!![9!.[9		わゐ゛ゐ゜	わゐ゛ゐ゜	わゐ゛ゑ゜	わゐ゛ゑ゜
Y9Ð!¤[!/Y	ゖゐゔゕ゜゛	!□[Y	D/t	t[w	a□																	{!![9!.[9		わゐ゛ゐ゜	わゐ゛ゐ゜	わゐ゛ゑ゜	わゐ゛ゑ゜
Y9Ð!¤[!/Y	ゖゐゔゕ゜゜	!□[Y	D/t	t[w	a□																	{!![9!.[9		わゐ゛ゐ゜	わゐ゛ゐ゜	わゐ゛ゑ゜	わゐ゛ゑ゜
Y9Ð!¤[!/Y	ゖゐゔゕ゜	!□[Y	D/t	t[w	a□																	{!![9!.[9		わゐ゛ゐ゜	わゐ゛ゐ゜	わゐ゛ゑ゜	わゐ゛ゑ゜
Y9Ð!¤[!/Y	ゖゐゔゕ゜゛	!□[Y	D/t	t[w	a□																	{!![9!.[9		わゐ゛ゐ゜	わゐ゛ゐ゜	わゐ゛ゑ゜	わゐ゛ゑ゜
Y9Ð!¤[!/Y	ゖゐゔゕ゜゜	!□[Y	D/t	t[w	a□																	{!![9!.[9		わゐ゛ゐ゜	わゐ゛ゐ゜	わゐ゛ゑ゜	わゐ゛ゑ゜
Y9Ð!¤[!/Y	ゖゐゔゕ゜゜゛	!□[Y	D/t	t[w	a□																	{!![9!.[9		わゐ゛ゐ゜	わゐ゛ゐ゜	わゐ゛ゑ゜	わゐ゛ゑ゜
Y9Ð!¤[!/Y	ゖゐゔゕ゜゜゜	!□[Y	D/t	t[w	a□																	{!![9!.[9		わゐ゛ゐ゜	わゐ゛ゐ゜	わゐ゛ゑ゜	わゐ゛ゑ゜
Y9Ð!¤[!/Y	ゖゐゔゕ゜゜゛゜	!□[Y	D/t	t[w	a□																	{!![9!.[9		わゐ゛ゐ゜	わゐ゛ゐ゜	わゐ゛ゑ゜	わゐ゛ゑ゜
Y9Ð!¤[!/Y	ゖゐゔゕ゜゜゜゛	!□[Y	D/t	t[w	a□																	{!![9!.[9		わゐ゛ゐ゜	わゐ゛ゐ゜	わゐ゛ゑ゜	わゐ゛ゑ゜
Y9Ð!¤[!/Y	ゖゐゔゕ゜゜゜゜	!□[Y	D/t	t[w	a□																	{!![9!.[9		わゐ゛ゐ゜	わゐ゛ゐ゜	わゐ゛ゑ゜	わゐ゛ゑ゜
Y9Ð!¤[!/Y	ゖゐゔゕ゜゜゜゜゛	!□[Y	D/t	t[w	a□																	{!![9!.[9		わゐ゛ゐ゜	わゐ゛ゐ゜	わゐ゛ゑ゜	わゐ゛ゑ゜
Y9Ð!¤[!/Y	ゖゐゔゕ゜゜゜゜゜	!□[Y	D/t	t[w	a□																	{!![9!.[9		わゐ゛ゐ゜	わゐ゛ゐ゜	わゐ゛ゑ゜	わゐ゛ゑ゜
Y9Ð!¤[!/Y	ゖゐゔゕ゜゜゜゜゜゛	!□[Y	D/t	t[w	a□																	{!![9!.[9		わゐ゛ゐ゜	わゐ゛ゐ゜	わゐ゛ゑ゜	わゐ゛ゑ゜
Y9Ð!¤[!/Y	ゖゐゔゕ゜゜゜゜゜゜	!□[Y	D/t	t[w	a□																	{!![9!.[9		わゐ゛ゐ゜	わゐ゛ゐ゜	わゐ゛ゑ゜	わゐ゛ゑ゜
Y9Ð!¤[!/Y	ゖゐゔゕ゜゜゜゜゜゜゛	!□[Y	D/t	t[w	a□																	{!![9!.[9		わゐ゛ゐ゜	わゐ゛ゐ゜	わゐ゛ゑ゜	わゐ゛ゑ゜
Y9Ð!¤[!/Y	ゖゐゔゕ゜゜゜゜゜゜゜	!□[Y	D/t	t[w	a□																	{!![9!.[9		わゐ゛ゐ゜	わゐ゛ゐ゜	わゐ゛ゑ゜	わゐ゛ゑ゜
Y9Ð!¤[!/Y	ゖゐゔゕ゜゜゜゜゜゜゜゛	!□[Y	D/t	t[w	a□																	{!![9!.[9		わゐ゛ゐ゜	わゐ゛ゐ゜	わゐ゛ゑ゜	わゐ゛ゑ゜
Y9Ð!¤[!/Y	ゖゐゔゕ゜゜゜゜゜゜゜゜	!□[Y	D/t	t[w	a□																	{!![9!.[9		わゐ゛ゐ゜	わゐ゛ゐ゜	わゐ゛ゑ゜	わゐ゛ゑ゜
Y9Ð!¤[!/Y	ゖゐゔゕ゜゜゜゜゜゜゜゜゛	!□[Y	D/t	t[w	a□																	{!![9!.[9		わゐ゛ゐ゜	わゐ゛ゐ゜	わゐ゛ゑ゜	わゐ゛ゑ゜
Y9Ð!¤[!/Y	ゖゐゔゕ゜゜゜゜゜゜゜゜゜	!□[Y	D/t	t[w	a□																	{!![9!.[9		わゐ゛ゐ゜	わゐ゛ゐ゜	わゐ゛ゑ゜	わゐ゛ゑ゜
Y9Ð!¤[!/Y	ゖゐゔゕ゜゜゜゜゜゜゜゜゜゛	!□[Y	D/t	t[w	a□																	{!![9!.[9		わゐ゛ゐ゜	わゐ゛ゐ゜	わゐ゛ゑ゜	わゐ゛ゑ゜
Y9Ð!¤[!/Y	ゖゐゔゕ゜゜゜゜゜゜゜゜゜゜	!□[Y	D/t	t[w	a□																	{!![9!.[9		わゐ゛ゐ゜	わゐ゛ゐ゜	わゐ゛ゑ゜	わゐ゛ゑ゜
Y9Ð!¤[!/Y	ゖゐゔゕ゜゜゜゜゜゜゜゜゜゜゛	!□[Y	D/t	t[w	a□																	{!![9!.[9		わゐ゛ゐ゜	わゐ゛ゐ゜	わゐ゛ゑ゜	わゐ゛ゑ゜
Y9Ð!¤[!/Y	ゖゐゔゕ゜゜゜゜゜゜゜゜゜゜゜	!□[Y	D/t	t[w	a□																	{!![9!.[9		わゐ゛ゐ゜	わゐ゛ゐ゜	わゐ゛ゑ゜	わゐ゛ゑ゜
Y9Ð!¤[!/Y	ゖゐゔゕ゜゜゜゜゜゜゜゜゜゜゜゛	!□[Y	D/t	t[w	a□																	{!![9!.[9		わゐ゛ゐ゜	わゐ゛ゐ゜	わゐ゛ゑ゜	わゐ゛ゑ゜
Y9Ð!¤[!/Y	ゖゐゔゕ゜゜゜゜゜゜゜゜゜゜゜゜	!□[Y	D/t	t[w	a□																	{!![9!.[9		わゐ゛ゐ゜	わゐ゛ゐ゜	わゐ゛ゑ゜	わゐ゛ゑ゜
Y9Ð!¤[!/Y	ゖゐゔゕ゜゜゜゜゜゜゜゜゜゜゜゜゛	!□[Y	D/t	t[w	a□																	{!![9!.[9		わゐ゛ゐ゜	わゐ゛ゐ゜	わゐ゛ゑ゜	わゐ゛ゑ゜
Y9Ð!¤[!/Y	ゖゐゔゕ゜゜゜゜゜゜゜゜゜゜゜゜゜	!□[Y	D/t	t[w	a□																	{!![9!.[9		わゐ゛ゐ゜	わゐ゛ゐ゜	わゐ゛ゑ゜	わゐ゛ゑ゜
Y9Ð!¤[!/Y	ゖゐゔゕ゜゜゜゜゜゜゜゜゜゜゜゜゜゛	!□[Y	D/t	t[w	a□																	{!![9!.[9		わゐ゛ゐ゜	わゐ゛ゐ゜	わゐ゛ゑ゜	わゐ゛ゑ゜
Y9Ð!¤[!/Y	ゖゐゔゕ゜゜゜゜゜゜゜゜゜゜゜゜゜゜	!□[Y	D/t	t[w	a□																	{!![9!.[9		わゐ゛ゐ゜	わゐ゛ゐ゜	わゐ゛ゑ゜	わゐ゛ゑ゜
Y9Ð!¤[!/Y	ゖゐゔゕ゜゜゜゜゜゜゜゜゜゜゜゜゜゜゛	!□[Y	D/t	t[w	a□																	{!![9!.[9		わゐ゛ゐ゜	わゐ゛ゐ゜	わゐ゛ゑ゜	わゐ゛ゑ゜
Y9Ð!¤[!/Y	ゖゐゔゕ゜゜゜゜゜゜゜゜゜゜゜゜゜゜゜	!□[Y	D/t	t[w	a□																	{!![9!.[9		わゐ゛ゐ゜	わゐ゛ゐ゜	わゐ゛ゑ゜	わゐ゛ゑ゜
Y9Ð!¤[!/Y	ゖゐゔゕ゜゜゜゜゜゜゜゜゜゜゜゜゜゜゜゛	!□[Y	D/t	t[w	a□																	{!![9!.[9		わゐ゛ゐ゜	わゐ゛ゐ゜	わゐ゛ゑ゜	わゐ゛ゑ゜
Y9Ð!¤[!/Y	ゖゐゔゕ゜゜゜゜゜゜゜゜゜゜゜゜゜゜゜゜	!□[Y	D/t	t[w	a□																	{!![9!.[9		わゐ゛ゐ゜	わゐ゛ゐ゜	わゐ゛ゑ゜	わゐ゛ゑ゜

a /E3れゎ/Eゔ [! 59{9! [95 ! {{Ða ! ¤{9! [
. ha ! b5 t Lb h- ¤{I 99¤

! {{9a . [Ð59{/ wLt¤Lhb	! {{9a . [Ðt! w¤ b- a . 9w	/ha thb9b¤ ¤I 9tw9{9b/9hC! b! . . w9¹ L! ¤Lhb Lb5L/! ¤9{ ¤I 9 tw9{9b/9hC¤I ! ¤/ha thb9b¤				. [h/Y95 ¤9wa Lb! [{ /! ¹ L¤Ð° L¤I ! b- a . 9wLb5L/! ¤9{ . [h/Y95 ¤9wa Lb! [th{L¤Lhb /! ¹ L¤Ð° L¤I h- ¤! b- a . 9wLb5L/! ¤9{ ht9b ¤9wa Lb! [th{L¤Lhb																{¤! ¤- {	/ha a 9b¤{	ht¤Lhb! [! ¤¤! ¤/I a 9b¤{ {h[5 {9t 9w! ¤9[Ð			
		I h- {LbD Y9Ð☝h[hw	Dwha a 9¤ /! t	t[w	a ! ¤{9! [	ろ	ゎ	わ	ゐ	ゑ	を	ん	ゔ	゛	ろれ	ろろ	ろゎ	ろわ	ろゐ	ろゑ	ろを			. ! /Y{I 9[[° L¤I wL {	. ! /Y{I 9[[° L¤I h- ¤wL {	れ! 5! t¤hw° L¤I wL {	れ! 5! t¤hw° L¤I h- ¤ wL {
Y9Ð! ☞[! /Y	[illegible]	! ⊡[Y	D/t	t[w	a ⊡						ﾓ	ﾊ									ろﾓ	{! [9! . [9		[illegible]	[illegible]	[illegible]	[illegible]
Y9Ð! ☞[! /Y	[illegible]	! ⊡[Y	D/t	t[w	a ⊡	ﾐ	ｷ		∂	ｽ		ﾊ	ﾆ							ろｽ	ろﾓ	{! [9! . [9		[illegible]	[illegible]	[illegible]	[illegible]
Y9Ð! ☞[! /Y	[illegible]	! ⊡[Y	D/t	t[w	a ⊡											ろｴ	ろｲ	ろﾁ	ろﾊ	ろｽ		{! [9! . [9		[illegible]	[illegible]	[illegible]	[illegible]
Y9Ð! ☞[! /Y	[illegible]	! ⊡[Y	D/t	t[w	a ⊡												ろｲ	ろﾁ	ろﾊ			{! [9! . [9		[illegible]	[illegible]	[illegible]	[illegible]
Y9Ð. ☞LÐI ¤DwL Ɛ	[illegible]	. ⊡D	D/t	t[w	a ⊡														ろﾊ	ろｽ		{! [9! . [9		[illegible]	[illegible]	[illegible]	[illegible]
Y9Ð! ☞[! /Y	[illegible]	! ⊡[Y	D/t	t[w	a ⊡		ｷ						ﾆ		ろｵ	ろｴ				ろｽ	ろﾓ	{! [9! . [9		[illegible]	[illegible]	[illegible]	[illegible]
Y9Ð! ☞[! /Y	[illegible]	! ⊡[Y	D/t	t[w	a ⊡										ろｵ	ろｴ				ろｽ		{! [9! . [9		[illegible]	[illegible]	[illegible]	[illegible]
Y9Ð! ☞[! /Y	[illegible]	! ⊡[Y	D/t	t[w	a ⊡	ﾐ							ﾆ		ろｵ	ろｴ				ろｽ		{! [9! . [9		[illegible]	[illegible]	[illegible]	[illegible]
Y9Ð! ☞[! /Y	[illegible]	! ⊡[Y	D/t	t[w	a ⊡	ﾐ	ｷ	ｵ	∂	ｽ	ﾓ	ﾊ	ﾆ		ろｵ	ろｴ				ろｽ		{! [9! . [9		[illegible]	[illegible]	[illegible]	[illegible]
Y9Ð! ☞[! /Y	[illegible]	! ⊡[Y	D/t	t[w	a ⊡	ﾐ							ﾆ		ろｵ	ろｴ				ろｽ	ろﾓ	{! [9! . [9		[illegible]	[illegible]	[illegible]	[illegible]
Y9Ð! ☞[! /Y	[illegible]	! ⊡[Y	D/t	t[w	a ⊡										ろｵ	ろｴ				ろｽ	ろﾓ	{! [9! . [9		[illegible]	[illegible]	[illegible]	[illegible]
Y9Ð! ☞[! /Y	[illegible]	! ⊡[Y	D/t	t[w	a ⊡	ﾐ	ｷ	ｵ	∂	ｽ	ﾓ	ﾊ	ﾆ									{! [9! . [9		[illegible]	[illegible]	[illegible]	[illegible]
Y9Ð! ☞[! /Y	[illegible]	! ⊡[Y	D/t	t[w	a ⊡	ﾐ																{! [9! . [9		[illegible]	[illegible]	[illegible]	[illegible]
Y9Ð! ☞[! /Y	[illegible]	! ⊡[Y	D/t	t[w	a ⊡	ﾐ	ｷ	ｵ	∂	ｽ	ﾓ	ﾊ	ﾆ			ろｴ					ろﾓ	{! [9! . [9		[illegible]	[illegible]	[illegible]	[illegible]
Y9Ð! ☞[! /Y	[illegible]	! ⊡[Y	D/t	t[w	a ⊡	ﾐ			∂	ｽ	ﾓ	ﾊ										{! [9! . [9		[illegible]	[illegible]	[illegible]	[illegible]
Y9Ð! ☞[! /Y	[illegible]	! ⊡[Y	D/t	t[w	a ⊡	ﾐ			∂	ｽ	ﾓ	ﾊ	ﾆ			ろｴ						{! [9! . [9		[illegible]	[illegible]	[illegible]	[illegible]
Y9Ð! ☞[! /Y	[illegible]	! ⊡[Y	D/t	t[w	a ⊡													ろﾁ			ろﾓ	{! [9! . [9		[illegible]	[illegible]	[illegible]	[illegible]
Y9Ð! ☞[! /Y	[illegible]	! ⊡[Y	D/t	t[w	a ⊡											ろｴ	ろｲ	ろﾁ			ろﾓ	{! [9! . [9		[illegible]	[illegible]	[illegible]	[illegible]
Y9Ð! ☞[! /Y	[illegible]	! ⊡[Y	D/t	t[w	a ⊡	ﾐ							ﾆ			ろｴ						{! [9! . [9		[illegible]	[illegible]	[illegible]	[illegible]
Y9Ð! ☞[! /Y	[illegible]	! ⊡[Y	D/t	t[w	a ⊡	ﾐ	ｷ				ﾓ	ﾊ	ﾆ		ろｵ				ろﾊ	ろｽ	ろﾓ	{! [9! . [9		[illegible]	[illegible]	[illegible]	[illegible]
Y9Ð! ☞[! /Y	[illegible]	! ⊡[Y	D/t	t[w	a ⊡	ﾐ	ｷ					ﾊ	ﾆ		ろｵ					ろｽ	ろﾓ	{! [9! . [9		[illegible]	[illegible]	[illegible]	[illegible]
Y9Ð! ☞[! /Y	[illegible]	! ⊡[Y	D/t	t[w	a ⊡			ｵ	∂	ｽ	ﾓ	ﾊ	ﾆ			ろｴ	ろｲ	ろﾁ	ろﾊ	ろｽ	ろﾓ	{! [9! . [9		[illegible]	[illegible]	[illegible]	[illegible]
Y9Ð! ☞[! /Y	[illegible]	! ⊡[Y	D/t	t[w	a ⊡						ﾓ	ﾊ	ﾆ						ろﾊ	ろｽ	ろﾓ	{! [9! . [9		[illegible]	[illegible]	[illegible]	[illegible]
Y9Ð! ☞[! /Y	[illegible]	! ⊡[Y	D/t	t[w	a ⊡							ﾊ	ﾆ							ろｽ	ろﾓ	{! [9! . [9		[illegible]	[illegible]	[illegible]	[illegible]
Y9Ð! ☞[! /Y	[illegible]	! ⊡[Y	D/t	t[w	a ⊡			ｵ	∂	ｽ	ﾓ	ﾊ									ろﾓ	{! [9! . [9		[illegible]	[illegible]	[illegible]	[illegible]
Y9Ð! ☞[! /Y	[illegible]	! ⊡[Y	D/t	t[w	a ⊡				∂								ろｲ					{! [9! . [9		[illegible]	[illegible]	[illegible]	[illegible]
Y9Ð! ☞[! /Y	[illegible]	! ⊡[Y	D/t	t[w	a ⊡				∂						ろｵ		ろｲ					{! [9! . [9		[illegible]	[illegible]	[illegible]	[illegible]
Y9Ð! ☞[! /Y	[illegible]	! ⊡[Y	D/t	t[w	a ⊡			ｵ	∂						ろｵ			ろﾁ	ろﾊ			{! [9! . [9		[illegible]	[illegible]	[illegible]	[illegible]
Y9Ð! ☞[! /Y	[illegible]	! ⊡[Y	D/t	t[w	a ⊡	ﾐ	ｷ		∂		ﾓ	ﾊ	ﾆ				ろｲ					{! [9! . [9		[illegible]	[illegible]	[illegible]	[illegible]
Y9Ð! ☞[! /Y	[illegible]	! ⊡[Y	D/t	t[w	a ⊡	ﾐ	ｷ		∂		ﾓ	ﾊ	ﾆ		ろｵ		ろｲ					{! [9! . [9		[illegible]	[illegible]	[illegible]	[illegible]
Y9Ð! ☞[! /Y	[illegible]	! ⊡[Y	D/t	t[w	a ⊡	ﾐ	ｷ	ｵ	∂		ﾓ	ﾊ	ﾆ		ろｵ			ろﾁ	ろﾊ		ろﾓ	{! [9! . [9		[illegible]	[illegible]	[illegible]	[illegible]
Y9Ð! ☞[! /Y	[illegible]	! ⊡[Y	D/t	t[w	a ⊡		ｷ			ｽ		ﾊ			ろｵ	ろｴ	ろｲ	ろﾁ	ろﾊ		ろﾓ	{! [9! . [9		[illegible]	[illegible]	[illegible]	[illegible]
Y9Ð! ☞[! /Y	[illegible]	! ⊡[Y	D/t	t[w	a ⊡										ろｵ	ろｴ	ろｲ	ろﾁ			ろﾓ	{! [9! . [9		[illegible]	[illegible]	[illegible]	[illegible]
Y9Ð! ☞[! /Y	[illegible]	! ⊡[Y	D/t	t[w	a ⊡	ﾐ	ｷ	ｵ		ｽ	ﾓ	ﾊ	ﾆ		ろｵ	ろｴ		ろﾁ	ろﾊ	ろｽ	ろﾓ	{! [9! . [9		[illegible]	[illegible]	[illegible]	[illegible]
Y9Ð! ☞[! /Y	[illegible]	! ⊡[Y	D/t	t[w	a ⊡	ﾐ	ｷ	ｵ		ｽ	ﾓ	ﾊ	ﾆ			ろｴ		ろﾁ	ろﾊ	ろｽ	ろﾓ	{! [9! . [9		[illegible]	[illegible]	[illegible]	[illegible]
Y9Ð! ☞[! /Y	[illegible]	! ⊡[Y	D/t	t[w	a ⊡							ﾊ	ﾆ					ろﾁ			ろﾓ	{! [9! . [9		[illegible]	[illegible]	[illegible]	[illegible]
Y9Ð! ☞[! /Y	[illegible]	! ⊡[Y	D/t	t[w	a ⊡							ﾊ	ﾆ					ろﾁ			ろﾓ	{! [9! . [9		[illegible]	[illegible]	[illegible]	[illegible]
Y9Ð! ☞[! /Y	[illegible]	! ⊡[Y	D/t	t[w	a ⊡							ﾊ	ﾆ		ろｵ	ろｴ	ろｲ	ろﾁ	ろﾊ			{! [9! . [9		[illegible]	[illegible]	[illegible]	[illegible]
Y9Ð! ☞[! /Y	[illegible]	! ⊡[Y	D/t	t[w	a ⊡						ﾓ					ろｴ	ろｲ	ろﾁ	ろﾊ			{! [9! . [9		[illegible]	[illegible]	[illegible]	[illegible]
Y9Ð! ☞[! /Y	[illegible]	! ⊡[Y	D/t	t[w	a ⊡	ﾐ	ｷ	ｵ	∂	ｽ	ﾓ	ﾊ	ﾆ		ろｵ	ろｴ	ろｲ	ろﾁ	ろﾊ	ろｽ		{! [9! . [9		[illegible]	[illegible]	[illegible]	[illegible]
Y9Ð! ☞[! /Y	[illegible]	! ⊡[Y	D/t	t[w	a ⊡	ﾐ	ｷ	ｵ	∂	ｽ	ﾓ	ﾊ	ﾆ		ろｵ	ろｴ				ろｽ	ろﾓ	{! [9! . [9		[illegible]	[illegible]	[illegible]	[illegible]
Y9Ð! ☞[! /Y	[illegible]	! ⊡[Y	D/t	t[w	a ⊡			ｵ			ﾓ											{! [9! . [9		[illegible]	[illegible]	[illegible]	[illegible]
Y9Ð. ☞LÐI ¤DwL Ɛ	[illegible]	. ⊡D	D/t	t[w	a ⊡						ﾓ							ろﾁ	ろﾊ	ろｽ	ろﾓ	{! [9! . [9		[illegible]	[illegible]	[illegible]	[illegible]
Y9Ð. ☞LÐI ¤DwL Ɛ	[illegible]	. ⊡D	D/t	t[w	a ⊡					ｽ								ろﾁ	ろﾊ	ろｽ	ろﾓ	{! [9! . [9		[illegible]	[illegible]	[illegible]	[illegible]
Y9Ð! ☞[! /Y	[illegible]	! ⊡[Y	D/t	t[w	a ⊡			わ	ゐ											ろゑ	ろを	{! [9! . [9		[illegible]	[illegible]	[illegible]	[illegible]
Y9Ð! ☞[! /Y	[illegible]	! ⊡[Y	D/t	t[w	a ⊡										ろれ	ろろ		ろわ			ろを	{! [9! . [9		[illegible]	[illegible]	[illegible]	[illegible]
Y9Ð! ☞[! /Y	[illegible]	! ⊡[Y	D/t	t[w	a ⊡		ゎ					ん	ゔ					ろわ	ろゐ	ろゑ	ろを	{! [9! . [9		[illegible]	[illegible]	[illegible]	[illegible]
Y9Ð! ☞[! /Y	[illegible]	! ⊡[Y	D/t	t[w	a ⊡						を				ろれ	ろろ	ろゎ					{! [9! . [9		[illegible]	[illegible]	[illegible]	[illegible]
Y9Ð! ☞[! /Y	[illegible]	! ⊡[Y	D/t	t[w	a ⊡	ろ	ゎ	わ	ゐ	ゑ	を											{! [9! . [9		[illegible]	[illegible]	[illegible]	[illegible]
Y9Ð! ☞[! /Y	[illegible]	! ⊡[Y	D/t	t[w	a ⊡		ゎ			ゑ				゛			ろゎ	ろわ				{! [9! . [9		[illegible]	[illegible]	[illegible]	[illegible]
Y9Ð! ☞[! /Y	[illegible]	! ⊡[Y	D/t	t[w	a ⊡		ゎ					ん		゛	ろれ	ろろ	ろゎ	ろわ	ろゐ		ろを	{! [9! . [9		[illegible]	[illegible]	[illegible]	[illegible]
Y9Ð! ☞[! /Y	[illegible]	! ⊡[Y	D/t	t[w	a ⊡	ﾐ	ｷ	ｵ	∂	ｽ		ﾊ	ﾆ									{! [9! . [9		[illegible]	[illegible]	[illegible]	[illegible]
Y9Ð! ☞[! /Y	[illegible]	! ⊡[Y	D/t	t[w	a ⊡							ﾊ	ﾆ			ろｴ	ろｲ		ろﾊ	ろｽ	ろﾓ	{! [9! . [9		[illegible]	[illegible]	[illegible]	[illegible]
Y9Ð! ☞[! /Y	[illegible]	! ⊡[Y	D/t	t[w	a ⊡	ﾐ	ｷ															{! [9! . [9		[illegible]	[illegible]	[illegible]	[illegible]
Y9Ð! ☞[! /Y	[illegible]	! ⊡[Y	D/t	t[w	a ⊡			ｵ			ﾓ				ろｵ	ろｴ	ろｲ	ろﾁ	ろﾊ	ろｽ	ろﾓ	{! [9! . [9		[illegible]	[illegible]	[illegible]	[illegible]
Y9Ð! ☞[! /Y	[illegible]	! ⊡[Y	D/t	t[w	a ⊡						ﾓ		ﾆ							ろｽ	ろﾓ	{! [9! . [9		[illegible]	[illegible]	[illegible]	[illegible]
Y9Ð! ☞[! /Y	[illegible]	! ⊡[Y	D/t	t[w	a ⊡						ﾓ		ﾆ		ろｵ	ろｴ	ろｲ			ろｽ	ろﾓ	{! [9! . [9		[illegible]	[illegible]	[illegible]	[illegible]
Y9Ð! ☞[! /Y	[illegible]	! ⊡[Y	D/t	t[w	a ⊡			ｵ	∂		ﾓ		ﾆ		ろｵ	ろｴ	ろｲ			ろｽ	ろﾓ	{! [9! . [9		[illegible]	[illegible]	[illegible]	[illegible]
Y9Ð! ☞[! /Y	[illegible]	! ⊡[Y	D/t	t[w	a ⊡			ｵ	∂		ﾓ		ﾆ							ろｽ	ろﾓ	{! [9! . [9		[illegible]	[illegible]	[illegible]	[illegible]
Y9Ð! ☞[! /Y	[illegible]	! ⊡[Y	D/t	t[w	a ⊡				∂				ﾆ		ろｵ					ろｽ	ろﾓ	{! [9! . [9		[illegible]	[illegible]	[illegible]	[illegible]
Y9Ð! ☞[! /Y	[illegible]	! ⊡[Y	D/t	t[w	a ⊡								ﾆ							ろｽ	ろﾓ	{! [9! . [9		[illegible]	[illegible]	[illegible]	[illegible]
Y9Ð! ☞[! /Y	[illegible]	! ⊡[Y	D/t	t[w	a ⊡				∂				ﾆ		ろｵ			ろﾁ	ろﾊ	ろｽ	ろﾓ	{! [9! . [9		[illegible]	[illegible]	[illegible]	[illegible]
Y9Ð! ☞[! /Y	[illegible]	! ⊡[Y	D/t	t[w	a ⊡										ろｵ	ろｴ		ろﾁ		ろｽ	ろﾓ	{! [9! . [9		[illegible]	[illegible]	[illegible]	[illegible]
Y9Ð! ☞[! /Y	[illegible]	! ⊡[Y	D/t	t[w	a ⊡	ﾐ							ﾆ		ろｵ	ろｴ		ろﾁ		ろｽ	ろﾓ	{! [9! . [9		[illegible]	[illegible]	[illegible]	[illegible]
Y9Ð! ☞[! /Y	[illegible]	! ⊡[Y	D/t	t[w	a ⊡	ﾐ	ｷ	ｵ	∂	ｽ	ﾓ	ﾊ	ﾆ		ろｵ	ろｴ		ろﾁ		ろｽ	ろﾓ	{! [9! . [9		[illegible]	[illegible]	[illegible]	[illegible]
Y9Ð! ☞[! /Y	[illegible]	! ⊡[Y	D/t	t[w	a ⊡	ﾐ	ｷ	ｵ				ﾊ					ろｲ	ろﾁ			ろﾓ	{! [9! . [9		[illegible]	[illegible]	[illegible]	[illegible]
Y9Ð! ☞[! /Y	[illegible]	! ⊡[Y	D/t	t[w	a ⊡			ｵ			ﾓ					ろｴ		ろﾁ	ろﾊ			{! [9! . [9		[illegible]	[illegible]	[illegible]	[illegible]
Y9Ð! ☞[! /Y	[illegible]	! ⊡[Y	D/t	t[w	a ⊡								ﾆ								ろﾓ	{! [9! . [9		[illegible]	[illegible]	[illegible]	[illegible]
Y9Ð! ☞[! /Y	[illegible]	! ⊡[Y	D/t	t[w	a ⊡			ｵ			ﾓ					ろｴ			ろﾊ			{! [9! . [9		[illegible]	[illegible]	[illegible]	[illegible]
Y9Ð! ☞[! /Y	[illegible]	! ⊡[Y	D/t	t[w	a ⊡	ﾐ	ｷ	ｵ	∂	ｽ	ﾓ	ﾊ	ﾆ		ろｵ	ろｴ	ろｲ	ろﾁ	ろﾊ	ろｽ		{! [9! . [9		[illegible]	[illegible]	[illegible]	[illegible]
Y9Ð! ☞[! /Y	[illegible]	! ⊡[Y	D/t	t[w	a ⊡	ﾐ	ｷ	ｵ	∂	ｽ		ﾊ	ﾆ		ろｵ	ろｴ	ろｲ	ろﾁ	ろﾊ	ろｽ		{! [9! . [9		[illegible]	[illegible]	[illegible]	[illegible]
Y9Ð! ☞[! /Y	[illegible]	! ⊡[Y	D/t	t[w	a ⊡	ﾐ	ｷ	ｵ				ﾊ	ﾆ		ろｵ	ろｴ			ろﾊ			{! [9! . [9		[illegible]	[illegible]	[illegible]	[illegible]
Y9Ð! ☞[! /Y	[illegible]	! ⊡[Y	D/t	t[w	a ⊡	ﾐ	ｷ					ﾊ	ﾆ		ろｵ				ろﾊ			{! [9! . [9		[illegible]	[illegible]	[illegible]	[illegible]
Y9Ð! ☞[! /Y	[illegible]	! ⊡[Y	D/t	t[w	a ⊡		ｷ	ｵ	∂	ｽ		ﾊ			ろｵ	ろｴ	ろｲ	ろﾁ	ろﾊ	ろｽ		{! [9! . [9		[illegible]	[illegible]	[illegible]	[illegible]
Y9Ð! ☞[! /Y	[illegible]	! ⊡[Y	D/t	t[w	a ⊡		ｷ	ｵ				ﾊ			ろｵ	ろｴ			ろﾊ			{! [9! . [9		[illegible]	[illegible]	[illegible]	[illegible]
Y9Ð! ☞[! /Y	[illegible]	! ⊡[Y	D/t	t[w	a ⊡		ｷ					ﾊ			ろｵ				ろﾊ			{! [9! . [9		[illegible]	[illegible]	[illegible]	[illegible]
Y9Ð! ☞[! /Y	[illegible]	! ⊡[Y	D/t	t[w	a ⊡	ﾐ	ｷ			ｽ	ﾓ		ﾆ		ろｵ	ろｴ	ろｲ	ろﾁ	ろﾊ	ろｽ	ろﾓ	{! [9! . [9		[illegible]	[illegible]	[illegible]	[illegible]
Y9Ð! ☞[! /Y	[illegible]	! ⊡[Y	D/t	t[w	a ⊡	ﾐ	ｷ									ろｴ	ろｲ	ろﾁ	ろﾊ	ろｽ	ろﾓ	{! [9! . [9		[illegible]	[illegible]	[illegible]	[illegible]
Y9Ð! ☞[! /Y	[illegible]	! ⊡[Y	D/t	t[w	a ⊡	ﾐ	ｷ	ｵ					ﾆ		ろｵ	ろｴ			ろﾊ		ろﾓ	{! [9! . [9		[illegible]	[illegible]	[illegible]	[illegible]
Y9Ð! ☞[! /Y	[illegible]	! ⊡[Y	D/t	t[w	a ⊡		ｷ	ｵ							ろｵ	ろｴ			ろﾊ			{! [9! . [9		[illegible]	[illegible]	[illegible]	[illegible]
Y9Ð! ☞[! /Y	[illegible]	! ⊡[Y	D/t	t[w	a ⊡		ｷ								ろｵ				ろﾊ			{! [9! . [9		[illegible]	[illegible]	[illegible]	[illegible]
Y9Ð! ☞[! /Y	[illegible]	! ⊡[Y	D/t	t[w	a ⊡	ﾐ	ｷ	ｵ	∂	ｽ	ﾓ	ﾊ	ﾆ						ろﾊ	ろｽ		{! [9! . [9		[illegible]	[illegible]	[illegible]	[illegible]
Y9Ð! ☞[! /Y	[illegible]	! ⊡[Y	D/t	t[w	a ⊡			ｵ												ろｽ		{! [9! . [9		[illegible]	[illegible]	[illegible]	[illegible]
Y9Ð! ☞[! /Y	[illegible]	! ⊡[Y	D/t	t[w	a ⊡	ﾐ			∂	ｽ	ﾓ	ﾊ									ろﾓ	{! [9! . [9		[illegible]	[illegible]	[illegible]	[illegible]
Y9Ð! ☞[! /Y	[illegible]	! ⊡[Y	D/t	t[w	a ⊡	ﾐ			∂	ｽ	ﾓ	ﾊ	ﾆ			ろｴ					ろﾓ	{! [9! . [9		[illegible]	[illegible]	[illegible]	[illegible]
Y9Ð! ☞[! /Y	[illegible]	! ⊡[Y	D/t	t[w	a ⊡			ｵ													ろﾓ	{! [9! . [9		[illegible]	[illegible]	[illegible]	[illegible]
Y9Ð. ☞LÐI ¤DwL Ɛ	[illegible]	. ⊡D	D/t	t[w	a ⊡				∂	ｽ	ﾓ	ﾊ	ﾆ		ろｵ	ろｴ	ろｲ	ろﾁ	ろﾊ	ろｽ	ろﾓ	{! [9! . [9		[illegible]	[illegible]	[illegible]	[illegible]
Y9Ð. ☞LÐI ¤DwL Ɛ	[illegible]	. ⊡D	D/t	t[w	a ⊡	ﾐ	ｷ				ﾓ							ろﾁ	ろﾊ	ろｽ	ろﾓ	{! [9! . [9		[illegible]	[illegible]	[illegible]	[illegible]
Y9Ð! ☞[! /Y	[illegible]	! ⊡[Y	D/t	t[w	a ⊡			ｵ	∂			ﾊ	ﾆ							ろｽ	ろﾓ	{! [9! . [9		[illegible]	[illegible]	[illegible]	[illegible]
Y9Ð! ☞[! /Y	[illegible]	! ⊡[Y	D/t	t[w	a ⊡			ｵ	∂										ろﾊ	ろｽ	ろﾓ	{! [9! . [9		[illegible]	[illegible]	[illegible]	[illegible]
Y9Ð! ☞[! /Y	[illegible]	! ⊡[Y	D/t	t[w	a ⊡										ろｵ	ろｴ					ろﾓ	{! [9! . [9		[illegible]	[illegible]	[illegible]	[illegible]
Y9Ð! ☞[! /Y	[illegible]	! ⊡[Y	D/t	t[w	a ⊡				∂		ﾓ	ﾊ	ﾆ		ろｵ	ろｴ	ろｲ			ろｽ	ろﾓ	{! [9! . [9		[illegible]	[illegible]	[illegible]	[illegible]

| ! { { 9a . [Ð59(/wlt ¤lhb | b- a . 9w | /ha thb9b¤ | | | | . [h/Y95 ¤9wa lb! [{ | | | |

a ÆƷ... [! 59{9! [95 ! {{Ða ! ¤{9! [
. ha ! b5 t lb h- ¤{I 99¤

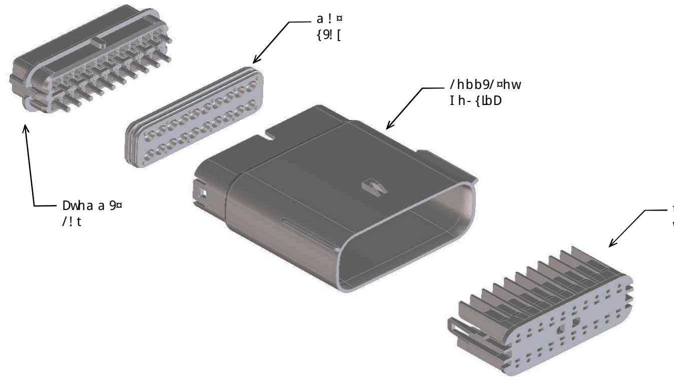

Chw! 55lǀ¤hb! [lbChwa ! ¤lhb {99 {5 [illegible]

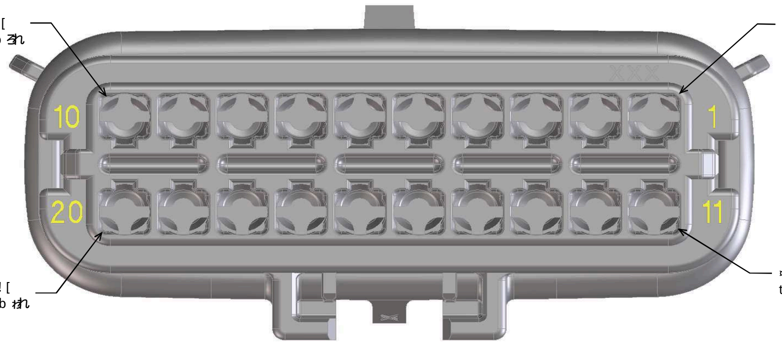

! . . w9¹ L! ¤lhb	59{/wLt ¤lhb	/h[hw	a ! ¤9wL! [
! ⊡[Y	I h-{lbD☞Y9ÐlbD ht ¤lhb !	. [! /Y	{t{ [illegible]
. ⊞D	I h-{lbD☞Y9ÐlbD ht ¤lhb .	[lDI ¤ Dw. Ɛ	{t{ [illegible]
/ ⊡w	I h-{lbD☞Y9ÐlbD ht ¤lhb /	. wh° b	{t{ [illegible]
5 ⊡Dw	I h-{lbD☞Y9ÐlbD ht ¤lhb 5	Dw99b	{t{ [illegible]
! ⊞[	I h-{lbD☞Y9ÐlbD ht ¤lhb !	Ð9[[h°	{t{ [illegible]
/ ⊟D	I h-{lbD☞Y9ÐlbD ht ¤lhb /	5! wY Dw. Ɛ	{t{ [illegible]
5 ⊞D	I h-{lbD☞Y9ÐlbD ht ¤lhb 5	{¤hb9 Dw. Ɛ	{t{ [illegible]
D/t	Dwha a 9¤/! t t[- DD95、	. [! /Y	{t{ [illegible]
D/h	Dwha a 9¤/! t ht 9b、	. [! /Y	{t{ [illegible]
t[w	t[w	b! ¤- w. [	{t{ [illegible]
a ⊠	a ! ¤{9! [	w- {¤ w95	lbI 9w9b¤[Ð[- . wL/! ¤95 {l[l/hb9
a ⊡	a ! ¤{9! [	[lDI ¤ . [- 9	lbI 9w9b¤[Ð[- . wL/! ¤95 {l[l/hb9

! {{9a . [Ð59{/wLt ¤lhb	! {{9a . [Ðt! w¤ b- a . 9w	/ha thb9b¤ ¤I 9 tw9{9b/9 hC! b ! . . w9¹ L! ¤lhb lb5l/! ¤9{ ¤I 9 tw9{9b/9 hC¤I ! ¤/ha thb9b¤				. [h/Y95 ¤9wa lb! [{ /! ¹ l¤Ð° l¤I ! b- a . 9wlb5l/! ¤9{ . [h/Y95 ¤9wa lb! [th{l¤lhb /! ¹ l¤Ð° l¤I h- ¤! b- a . 9wlb5l/! ¤9{ ht 9b ¤9wa lb! [th{l¤lhb																				{¤! ¤- {	/ha a 9b¤{	ht¤lhb! [! ¤¤! ¤/I a 9b¤{ {h[5 {9t9w. ¤9[Ð			
		I h-{lbD Y9Ð☞h[hw	Dwha a 9¤ /! t	t[w	a ! ¤{9! [	ろ	ゎ	わ	ゐ	ゑ	を	ん	ゔ	゜	ろれ	ろろ	ろゎ	ろわ	ろゐ	ろゑ	ろを	ろん	ろゔ	ろ゜	ゎれ			. ! /Y{I 9[[° l¤I wL {	. ! /Y{I 9[[° l¤I h- ¤wL {	[illegible]! 5! t¤hw° l¤I wL {	[illegible]! 5! t¤hw° l¤I h- ¤ wL {
Y9Ð! ☞[! /Y	[illegible]	! ⊡[Y	D/h	t[w	a ⊠																					h.{h[9¤9	{99 [illegible]	[illegible]	[illegible]	[illegible]	[illegible]
Y9Ð. ☞[lDI ¤ Dw. Ɛ	[illegible]	. ⊞D	D/h	t[w	a ⊠																					h.{h[9¤9	{99 [illegible]	[illegible]	[illegible]	[illegible]	[illegible]
Y9Ð/☞wh° b	[illegible]	/ ⊡w	D/h	t[w	a ⊠																					h.{h[9¤9	{99 [illegible]	[illegible]	[illegible]	[illegible]	[illegible]
Y9Ð5☞Dw99b	[illegible]	5 ⊡Dw	D/h	t[w	a ⊠																					h.{h[9¤9	{99 [illegible]	[illegible]	[illegible]	[illegible]	[illegible]
Y9Ð! ☞[! /Y	[illegible]	! ⊡[Y	D/t	t[w	a ⊠																				[illegible]	h.{h[9¤9	{99 [illegible]	[illegible]	[illegible]	[illegible]	[illegible]
Y9Ð! ☞[! /Y	[illegible]	! ⊡[Y	D/t	t[w	a ⊠											[illegible]										h.{h[9¤9	{99 [illegible]	[illegible]	[illegible]	[illegible]	[illegible]
Y9Ð! ☞[! /Y	[illegible]	! ⊡[Y	D/t	t[w	a ⊠				[illegible]	[illegible]	[illegible]	[illegible]							[illegible]	[illegible]	[illegible]	[illegible]				h.{h[9¤9	{99 [illegible]	[illegible]	[illegible]	[illegible]	[illegible]
Y9Ð! ☞[! /Y	[illegible]	! ⊡[Y	D/t	t[w	a ⊠							[illegible]									[illegible]					h.{h[9¤9	{99 [illegible]	[illegible]	[illegible]	[illegible]	[illegible]
Y9Ð! ☞[! /Y	[illegible]	! ⊡[Y	D/t	t[w	a ⊠										[illegible]	[illegible]	[illegible]								[illegible]	h.{h[9¤9	{99 [illegible]	[illegible]	[illegible]	[illegible]	[illegible]
Y9Ð! ☞[! /Y	[illegible]	! ⊡[Y	D/t	t[w	a ⊠	[illegible]	[illegible]																		[illegible]	h.{h[9¤9	{99 [illegible]	[illegible]	[illegible]	[illegible]	[illegible]
Y9Ð! ☞[! /Y	[illegible]	! ⊡[Y	D/t	t[w	a ⊠	[illegible]	[illegible]								[illegible]	[illegible]	[illegible]								[illegible]	h.{h[9¤9	{99 [illegible]	[illegible]	[illegible]	[illegible]	[illegible]
Y9Ð! ☞[! /Y	[illegible]	! ⊡[Y	D/t	t[w	a ⊠	[illegible]	[illegible]								[illegible]	[illegible]	[illegible]	[illegible]	[illegible]						[illegible]	h.{h[9¤9	{99 [illegible]	[illegible]	[illegible]	[illegible]	[illegible]
Y9Ð! ☞[! /Y	[illegible]	! ⊡[Y	D/t	t[w	a ⊠			[illegible]	[illegible]	[illegible]									[illegible]			[illegible]		[illegible]		h.{h[9¤9	{99 [illegible]	[illegible]	[illegible]	[illegible]	[illegible]
Y9Ð! ☞[! /Y	[illegible]	! ⊡[Y	D/t	t[w	a ⊠			[illegible]	[illegible]	[illegible]												[illegible]				h.{h[9¤9	{99 [illegible]	[illegible]	[illegible]	[illegible]	[illegible]
Y9Ð! ☞[! /Y	[illegible]	! ⊡[Y	D/t	t[w	a ⊠		[illegible]																[illegible]	[illegible]	[illegible]	h.{h[9¤9	{99 [illegible]	[illegible]	[illegible]	[illegible]	[illegible]
Y9Ð! ☞[! /Y	[illegible]	! ⊡[Y	D/t	t[w	a ⊠																		[illegible]	[illegible]	[illegible]	h.{h[9¤9	{99 [illegible]	[illegible]	[illegible]	[illegible]	[illegible]
Y9Ð! ☞[! /Y	[illegible]	! ⊡[Y	D/t	t[w	a ⊠										[illegible]		[illegible]	[illegible]	[illegible]					[illegible]		h.{h[9¤9	{99 [illegible]	[illegible]	[illegible]	[illegible]	[illegible]
Y9Ð! ☞[! /Y	[illegible]	! ⊡[Y	D/t	t[w	a ⊠			[illegible]	[illegible]										[illegible]			[illegible]		[illegible]		h.{h[9¤9	{99 [illegible]	[illegible]	[illegible]	[illegible]	[illegible]
Y9Ð! ☞[! /Y	[illegible]	! ⊡[Y	D/t	t[w	a ⊠			[illegible]	[illegible]	[illegible]									[illegible]			[illegible]	[illegible]	[illegible]	[illegible]	h.{h[9¤9	{99 [illegible]	[illegible]	[illegible]	[illegible]	[illegible]
Y9Ð! ☞[! /Y	[illegible]	! ⊡[Y	D/t	t[w	a ⊠	[illegible]	[illegible]	[illegible]	[illegible]	[illegible]					[illegible]				[illegible]			[illegible]	[illegible]	[illegible]	[illegible]	h.{h[9¤9	{99 [illegible]	[illegible]	[illegible]	[illegible]	[illegible]
Y9Ð! ☞[! /Y	[illegible]	! ⊡[Y	D/t	t[w	a ⊠			[illegible]	[illegible]						[illegible]				[illegible]			[illegible]		[illegible]		h.{h[9¤9	{99 [illegible]	[illegible]	[illegible]	[illegible]	[illegible]
Y9Ð! ☞[! /Y	[illegible]	! ⊡[Y	D/t	t[w	a ⊠										[illegible]	[illegible]	[illegible]			[illegible]	[illegible]	[illegible]			[illegible]	h.{h[9¤9	{99 [illegible]	[illegible]	[illegible]	[illegible]	[illegible]
Y9Ð! ☞[! /Y	[illegible]	! ⊡[Y	D/t	t[w	a ⊠															[illegible]	[illegible]	[illegible]			[illegible]	h.{h[9¤9	{99 [illegible]	[illegible]	[illegible]	[illegible]	[illegible]
Y9Ð! ☞[! /Y	[illegible]	! ⊡[Y	D/t	t[w	a ⊠										[illegible]				[illegible]			[illegible]		[illegible]		h.{h[9¤9	{99 [illegible]	[illegible]	[illegible]	[illegible]	[illegible]
Y9Ð! ☞[! /Y	[illegible]	! ⊡[Y	D/t	t[w	a ⊠				[illegible]	[illegible]					[illegible]				[illegible]	[illegible]		[illegible]		[illegible]		h.{h[9¤9	{99 [illegible]	[illegible]	[illegible]	[illegible]	[illegible]
Y9Ð! ☞[! /Y	[illegible]	! ⊡[Y	D/t	t[w	a ⊠				[illegible]	[illegible]					[illegible]				[illegible]	[illegible]		[illegible]	[illegible]	[illegible]		h.{h[9¤9	{99 [illegible]	[illegible]	[illegible]	[illegible]	[illegible]
Y9Ð! ☞[! /Y	[illegible]	! ⊡[Y	D/t	t[w	a ⊠	[illegible]		[illegible]	[illegible]	[illegible]	[illegible]	[illegible]	[illegible]		[illegible]	[illegible]		[illegible]	[illegible]	[illegible]	[illegible]	[illegible]	[illegible]	[illegible]	[illegible]	h.{h[9¤9	{99 [illegible]	[illegible]	[illegible]	[illegible]	[illegible]
Y9Ð! ☞[! /Y	[illegible]	! ⊡[Y	D/t	t[w	a ⊠				[illegible]	[illegible]	[illegible]	[illegible]									[illegible]	[illegible]				h.{h[9¤9	{99 [illegible]	[illegible]	[illegible]	[illegible]	[illegible]
Y9Ð! ☞[! /Y	[illegible]	! ⊡[Y	D/t	t[w	a ⊠			[illegible]	[illegible]	[illegible]								[illegible]	[illegible]	[illegible]			[illegible]	[illegible]		h.{h[9¤9	{99 [illegible]	[illegible]	[illegible]	[illegible]	[illegible]
Y9Ð! ☞[! /Y	[illegible]	! ⊡[Y	D/t	t[w	a ⊠				[illegible]			[illegible]									[illegible]					h.{h[9¤9	{99 [illegible]	[illegible]	[illegible]	[illegible]	[illegible]
Y9Ð! ☞[! /Y	[illegible]	! ⊡[Y	D/t	t[w	a ⊠			[illegible]	[illegible]	[illegible]								[illegible]		[illegible]			[illegible]	[illegible]		h.{h[9¤9	{99 [illegible]	[illegible]	[illegible]	[illegible]	[illegible]
Y9Ð! ☞[! /Y	[illegible]	! ⊡[Y	D/t	t[w	a ⊠										[illegible]							[illegible]		[illegible]		h.{h[9¤9	{99 [illegible]	[illegible]	[illegible]	[illegible]	[illegible]
Y9Ð! ☞[! /Y	[illegible]	! ⊡[Y	D/t	t[w	a ⊠																	[illegible]	[illegible]	[illegible]	[illegible]	h.{h[9¤9	{99 [illegible]	[illegible]	[illegible]	[illegible]	[illegible]
Y9Ð! ☞[! /Y	[illegible]	! ⊡[Y	D/t	t[w	a ⊠																[illegible]	[illegible]	[illegible]	[illegible]	[illegible]	h.{h[9¤9	{99 [illegible]	[illegible]	[illegible]	[illegible]	[illegible]
Y9Ð! ☞[! /Y	[illegible]	! ⊡[Y	D/t	t[w	a ⊠							[illegible]										[illegible]	[illegible]	[illegible]	[illegible]	h.{h[9¤9	{99 [illegible]	[illegible]	[illegible]	[illegible]	[illegible]
Y9Ð! ☞[! /Y	[illegible]	! ⊡[Y	D/t	t[w	a ⊠							[illegible]														h.{h[9¤9	{99 [illegible]	[illegible]	[illegible]	[illegible]	[illegible]
Y9Ð! ☞[! /Y	[illegible]	! ⊡[Y	D/t	t[w	a ⊠	[illegible]	[illegible]	[illegible]	[illegible]	[illegible]	[illegible]	[illegible]	[illegible]		[illegible]		[illegible]					[illegible]		[illegible]		h.{h[9¤9	{99 [illegible]	[illegible]	[illegible]	[illegible]	[illegible]
Y9Ð! ☞[! /Y	[illegible]	! ⊡[Y	D/t	t[w	a ⊠	[illegible]	[illegible]	[illegible]	[illegible]	[illegible]	[illegible]	[illegible]	[illegible]		[illegible]							[illegible]		[illegible]		h.{h[9¤9	{99 [illegible]	[illegible]	[illegible]	[illegible]	[illegible]
Y9Ð! ☞[! /Y	[illegible]	! ⊡[Y	D/t	t[w	a ⊠							[illegible]										[illegible]			[illegible]	h.{h[9¤9	{99 [illegible]	[illegible]	[illegible]	[illegible]	[illegible]
Y9Ð! ☞Ð9[[h°	[illegible]	! ⊞[	D/h	t[w	a ⊠																					h.{h[9¤9	{99 [illegible]	[illegible]	[illegible]	[illegible]	[illegible]
Y9Ð! ☞[! /Y	[illegible]	! ⊡[Y	D/t	t[w	a ⊠										[illegible]				[illegible]			[illegible]	[illegible]	[illegible]		h.{h[9¤9	{99 [illegible]	[illegible]	[illegible]	[illegible]	[illegible]
Y9Ð! ☞[! /Y	[illegible]	! ⊡[Y	D/t	t[w	a ⊠		[illegible]		[illegible]							[illegible]	[illegible]		[illegible]							h.{h[9¤9	{99 [illegible]	[illegible]	[illegible]	[illegible]	[illegible]
Y9Ð! ☞[! /Y	[illegible]	! ⊡[Y	D/t	t[w	a ⊠																		[illegible]	[illegible]		h.{h[9¤9	{99 [illegible]	[illegible]	[illegible]	[illegible]	[illegible]
Y9Ð! ☞[! /Y	[illegible]	! ⊡[Y	D/t	t[w	a ⊠										[illegible]											h.{h[9¤9	{99 [illegible]	[illegible]	[illegible]	[illegible]	[illegible]
Y9Ð! ☞[! /Y	[illegible]	! ⊡[Y	D/t	t[w	a ⊠	[illegible]											[illegible]			[illegible]	[illegible]	[illegible]	[illegible]	[illegible]	[illegible]	h.{h[9¤9	{99 [illegible]	[illegible]	[illegible]	[illegible]	[illegible]
Y9Ð! ☞[! /Y	[illegible]	! ⊡[Y	D/t	t[w	a ⊠			[illegible]	[illegible]	[illegible]					[illegible]			[illegible]	[illegible]	[illegible]		[illegible]	[illegible]	[illegible]		h.{h[9¤9	{99 [illegible]	[illegible]	[illegible]	[illegible]	[illegible]
Y9Ð! ☞[! /Y	[illegible]	! ⊡[Y	D/t	t[w	a ⊠	[illegible]	[illegible]	[illegible]	[illegible]	[illegible]	[illegible]	[illegible]	[illegible]			[illegible]	[illegible]	[illegible]	[illegible]	[illegible]	[illegible]		[illegible]	[illegible]	[illegible]	h.{h[9¤9	{99 [illegible]	[illegible]	[illegible]	[illegible]	[illegible]
Y9Ð! ☞[! /Y	[illegible]	! ⊡[Y	D/t	t[w	a ⊠			[illegible]	[illegible]	[illegible]	[illegible]		[illegible]										[illegible]	[illegible]	[illegible]	h.{h[9¤9	{99 [illegible]	[illegible]	[illegible]	[illegible]	[illegible]
Y9Ð! ☞[! /Y	[illegible]	! ⊡[Y	D/t	t[w	a ⊠	[illegible]	[illegible]	[illegible]	[illegible]	[illegible]	[illegible]					[illegible]	[illegible]	[illegible]	[illegible]	[illegible]	[illegible]	[illegible]	[illegible]	[illegible]	[illegible]	h.{h[9¤9	{99 [illegible]	[illegible]	[illegible]	[illegible]	[illegible]
Y9Ð! ☞[! /Y	[illegible]	! ⊡[Y	D/t	t[w	a ⊠											[illegible]	[illegible]	[illegible]	[illegible]	[illegible]	[illegible]	[illegible]	[illegible]	[illegible]	[illegible]	h.{h[9¤9	{99 [illegible]	[illegible]	[illegible]	[illegible]	[illegible]
Y9Ð! ☞[! /Y	[illegible]	! ⊡[Y	D/t	t[w	a ⊠	[illegible]	[illegible]	[illegible]	[illegible]	[illegible]	[illegible]	[illegible]	[illegible]		[illegible]	[illegible]	[illegible]	[illegible]	[illegible]	[illegible]	[illegible]	[illegible]	[illegible]	[illegible]	[illegible]	h.{h[9¤9	{99 [illegible]	[illegible]	[illegible]	[illegible]	[illegible]
Y9Ð! ☞[! /Y	[illegible]	! ⊡[Y	D/t	t[w	a ⊠			[illegible]					[illegible]										[illegible]	[illegible]	[illegible]	h.{h[9¤9	{99 [illegible]	[illegible]	[illegible]	[illegible]	[illegible]
Y9Ð/☞5! wY Dw. Ɛ	[illegible]	/ ⊟D	D/h	t[w	a ⊠																					h.{h[9¤9	{99 [illegible]	[illegible]	[illegible]	[illegible]	[illegible]
Y9Ð5☞{¤hb9 Dw. Ɛ	[illegible]	5 ⊞D	D/h	t[w	a ⊠																					h.{h[9¤9	{99 [illegible]	[illegible]	[illegible]	[illegible]	[illegible]
Y9Ð. ☞[lDI ¤ Dw. Ɛ	[illegible]	. ⊞D	D/t	t[w	a ⊠			[illegible]		[illegible]					[illegible]											h.{h[9¤9	{99 [illegible]	[illegible]	[illegible]	[illegible]	[illegible]
Y9Ð. ☞[lDI ¤ Dw. Ɛ	[illegible]	. ⊞D	D/t	t[w	a ⊠			[illegible]	[illegible]	[illegible]					[illegible]	[illegible]	[illegible]	[illegible]	[illegible]	[illegible]	[illegible]	[illegible]	[illegible]	[illegible]	[illegible]	h.{h[9¤9	{99 [illegible]	[illegible]	[illegible]	[illegible]	[illegible]
Y9Ð. ☞[lDI ¤ Dw. Ɛ	[illegible]	. ⊞D	D/t	t[w	a ⊠			[illegible]		[illegible]					[illegible]	[illegible]	[illegible]	[illegible]	[illegible]							h.{h[9¤9	{99 [illegible]	[illegible]	[illegible]	[illegible]	[illegible]
Y9Ð. ☞[lDI ¤ Dw. Ɛ	[illegible]	. ⊞D	D/t	t[w	a ⊠			[illegible]	[illegible]	[illegible]	[illegible]		[illegible]		[illegible]				[illegible]					[illegible]		h.{h[9¤9	{99 [illegible]	[illegible]	[illegible]	[illegible]	[illegible]
Y9Ð! ☞[! /Y	[illegible]	! ⊡[Y	D/t	t[w	a ⊠				[illegible]	[illegible]			[illegible]				[illegible]			[illegible]	[illegible]	[illegible]	[illegible]	[illegible]	[illegible]	h.{h[9¤9	{99 [illegible]	[illegible]	[illegible]	[illegible]	[illegible]
Y9Ð! ☞[! /Y	[illegible]	! ⊡[Y	D/t	t[w	a ⊠				[illegible]	[illegible]			[illegible]				[illegible]					[illegible]	[illegible]	[illegible]	[illegible]	h.{h[9¤9	{99 [illegible]	[illegible]	[illegible]	[illegible]	[illegible]
Y9Ð! ☞Ð9[[h°	[illegible]	! ⊞[	D/t	t[w	a ⊠			[illegible]			[illegible]	[illegible]	[illegible]		[illegible]	[illegible]	[illegible]	[illegible]	[illegible]				[illegible]			h.{h[9¤9	{99 [illegible]	[illegible]	[illegible]	[illegible]	[illegible]
Y9Ð! ☞Ð9[[h°	[illegible]	! ⊞[	D/t	t[w	a ⊠			[illegible]			[illegible]	[illegible]	[illegible]		[illegible]		[illegible]	[illegible]	[illegible]							h.{h[9¤9	{99 [illegible]	[illegible]	[illegible]	[illegible]	[illegible]
Y9Ð! ☞Ð9[[h°	[illegible]	! ⊞[	D/t	t[w	a ⊠			[illegible]				[illegible]			[illegible]				[illegible]	[illegible]						h.{h[9¤9	{99 [illegible]	[illegible]	[illegible]	[illegible]	[illegible]
Y9Ð! ☞Ð9[[h°	[illegible]	! ⊞[	D/t	t[w	a ⊠			[illegible]	[illegible]	[illegible]	[illegible]	[illegible]	[illegible]		[illegible]	[illegible]	[illegible]	[illegible]	[illegible]	[illegible]	[illegible]	[illegible]	[illegible]	[illegible]	[illegible]	h.{h[9¤9	{99 [illegible]	[illegible]	[illegible]	[illegible]	[illegible]
Y9Ð! ☞Ð9[[h°	[illegible]	! ⊞[	D/t	t[w	a ⊠			[illegible]	[illegible]	[illegible]	[illegible]	[illegible]	[illegible]		[illegible]	[illegible]	[illegible]	[illegible]	[illegible]				[illegible]			h.{h[9¤9	{99 [illegible]	[illegible]	[illegible]	[illegible]	[illegible]
Y9Ð! ☞Ð9[[h°	[illegible]	! ⊞[	D/t	t[w	a ⊠			[illegible]				[illegible]	[illegible]		[illegible]				[illegible]							h.{h[9¤9	{99 [illegible]	[illegible]	[illegible]	[illegible]	[illegible]
Y9Ð! ☞[! /Y	[illegible]	! ⊡[Y	D/t	t[w	a ⊠			[illegible]	[illegible]	[illegible]		[illegible]						[illegible]		[illegible]			[illegible]	[illegible]		h.{h[9¤9	{99 [illegible]	[illegible]	[illegible]	[illegible]	[illegible]
Y9Ð! ☞[! /Y	[illegible]	! ⊡[Y	D/t	t[w	a ⊠							[illegible]			[illegible]				[illegible]			[illegible]	[illegible]	[illegible]		h.{h[9¤9	{99 [illegible]	[illegible]	[illegible]	[illegible]	[illegible]
Y9Ð! ☞[! /Y	[illegible]	! ⊡[Y	D/t	t[w	a ⊠		[illegible]	[illegible]	[illegible]	[illegible]									[illegible]			[illegible]	[illegible]	[illegible]	[illegible]	h.{h[9¤9	{99 [illegible]	[illegible]	[illegible]	[illegible]	[illegible]
Y9Ð! ☞[! /Y	[illegible]	! ⊡[Y	D/t	t[w	a ⊠											[illegible]						[illegible]		[illegible]		h.{h[9¤9	{99 [illegible]	[illegible]	[illegible]	[illegible]	[illegible]
Y9Ð! ☞[! /Y	[illegible]	! ⊡[Y	D/t	t[w	a ⊠	[illegible]	[illegible]	[illegible]	[illegible]	[illegible]	[illegible]	[illegible]	[illegible]			[illegible]						[illegible]		[illegible]		h.{h[9¤9	{99 [illegible]	[illegible]	[illegible]	[illegible]	[illegible]
Y9Ð! ☞[! /Y	[illegible]	! ⊡[Y	D/t	t[w	a ⊠								[illegible]							[illegible]						h.{h[9¤9	{99 [illegible]	[illegible]	[illegible]	[illegible]	[illegible]
Y9Ð! ☞[! /Y	[illegible]	! ⊡[Y	D/t	t[w	a ⊠	[illegible]							[illegible]		[illegible]					[illegible]		[illegible]				h.{h[9¤9	{99 [illegible]	[illegible]	[illegible]	[illegible]	[illegible]
Y9Ð! ☞[! /Y	[illegible]	! ⊡[Y	D/t	t[w	a ⊠	[illegible]							[illegible]			[illegible]								[illegible]	[illegible]	h.{h[9¤9	{99 [illegible]	[illegible]	[illegible]	[illegible]	[illegible]
Y9Ð! ☞[! /Y	[illegible]	! ⊡[Y	D/t	t[w	a ⊠										[illegible]									[illegible]	[illegible]	h.{h[9¤9	{99 [illegible]	[illegible]	[illegible]	[illegible]	[illegible]
Y9Ð! ☞[! /Y	[illegible]	! ⊡[Y	D/t	t[w	a ⊠													[illegible]			[illegible]			[illegible]	[illegible]	h.{h[9¤9	{99 [illegible]	[illegible]	[illegible]	[illegible]	[illegible]
Y9Ð! ☞[! /Y	[illegible]	! ⊡[Y	D/t	t[w	a ⊠				[illegible]										[illegible]							h.{h[9¤9	{99 [illegible]	[illegible]	[illegible]	[illegible]	[illegible]
Y9Ð! ☞[! /Y	[illegible]	! ⊡[Y	D/t	t[w	a ⊠				[illegible]	[illegible]	[illegible]	[illegible]	[illegible]		[illegible]				[illegible]	[illegible]	[illegible]	[illegible]	[illegible]	[illegible]	[illegible]	h.{h[9¤9	{99 [illegible]	[illegible]	[illegible]	[illegible]	[illegible]
Y9Ð! ☞[! /Y	[illegible]	! ⊡[Y	D/t	t[w	a ⊠	[illegible]							[illegible]		[illegible]	[illegible]	[illegible]	[illegible]	[illegible]	[illegible]		[illegible]				h.{h[9¤9	{99 [illegible]	[illegible]	[illegible]	[illegible]	[illegible]
Y9Ð! ☞[! /Y	[illegible]	! ⊡[Y	D/t	t[w	a ⊠	[illegible]		[illegible]	[illegible]				[illegible]			[illegible]		[illegible]	[illegible]				[illegible]	[illegible]	[illegible]	h.{h[9¤9	{99 [illegible]	[illegible]	[illegible]	[illegible]	[illegible]

molex

a ÆÆ[illegible] [! 59{9! [95 ! {{Ða ! ¤{9! [. ha ! b5 tŁb h- ¤{I 99¤

| !{{9a . [Ð t! w¤ b- a . 9w | /ha thb9b¤ | | |

!{{9a . [Ð59{/wŁt ¤thb	!{{9a . [Ðt! w¤ b- a . 9w	/ha thb9b¤					.[h/Y95 ¤9wa Łb![{																	{¤! ¤- {	/ha a 9b¤{	ht¤Łhb![!¤¤! ¤/I a 9b¤{ {h[5 {9t9wL ¤9{Ð			
		¤[9tw8{9b/9hC! b!. . w8' I! ¤thb Łb5L/! ¤9{ ¤[9 tw8{9b/9hC¤I! ¤/ha thb9b¤☆					/!'Ł¤Ð° Ł¤I ! b- a . 9wŁb5L/! ¤9{ . [h/Y95 ¤9wa Łb! [t h{Ł¤Łhb /!'Ł¤Ð° Ł¤I h- ¤! b- a . 9wŁb5L/! ¤9{ ht9b ¤9wa Łb! [t h{Ł¤Łhb																						
		I h- {ŁbD Y9Ð¤UŁh[hw	Dwha a 9¤ /!t	t[w	a ! ¤{9! [	ろ	わ	わ	ゐ	え	を	ん	う	゛	ゔれ	ゔゐ	ゔゑ	ゔを	ゔん	ゔゔ	ゔゔ	ゔゔ゛	ゔれ			.!/Y{I 9[[° Ł¤I wL {	.!/Y{I 9[[° Ł¤I h- ¤wL {	れ! 5! t¤hw° Ł¤I wL {	れ! 5! t¤hw° Ł¤I h- ¤wL {
Y9Ð! ¤[!/Y	ゕゔゔゔゔ゛	! □[Y	D/t	t[w	a ⊡	²	₮	₮				ん									゚		ろ	ゖ	{! [9! . [9		ゐゑ¥ぼ€	ゐゑ¥ぼ€	ゐゑ¥ぼ€	ゐゑ¥ぼ€
Y9Ð! ¤[!/Y	ゕゔゔゔゔ゛゛	! □[Y	D/t	t[w	a ⊡	²	₮	₮	ゐ	ゑ		ん	゛					ゔ	ゔ	ゔ	ゔ		ろ	ゖ	{! [9! . [9		ゐゑ¥ぼ€	ゐゑ¥ぼ€	ゐゑ¥ぼ€	ゐゑ¥ぼ€
Y9Ð! ¤[!/Y	ゕゔゔゔれ	! □[Y	D/t	t[w	a ⊡	²	₮	₮	ゐ	ゑ						ゔ	ゔ			ゔ		ゔ	ろ	ゖ	{! [9! . [9		ゐゑ¥ぼ€	ゐゑ¥ぼ€	ゐゑ¥ぼ€	ゐゑ¥ぼ€
Y9Ð! ¤[!/Y	ゕゔゔゔど	! □[Y	D/t	t[w	a ⊡	²	₮								ゔ	ゔ				ゔ			ろ	ゖ	{! [9! . [9		ゐゑ¥ぼ€	ゐゑ¥ぼ€	ゐゑ¥ぼ€	ゐゑ¥ぼ€
Y9Ð! ¤[!/Y	ゕゔゔゔれ	! □[Y	D/t	t[w	a ⊡		₮	₮	ゐ	ゑ			²												{! [9! . [9		ゐゑ¥ぼ€	ゐゑ¥ぼ€	ゐゑ¥ぼ€	ゐゑ¥ぼ€
Y9Ð! ¤[!/Y	ゕゔゔゔれ	! □[Y	D/t	t[w	a ⊡	²	₮	₮															ろ	ゖ	{! [9! . [9		ゐゑ¥ぼ€	ゐゑ¥ぼ€	ゐゑ¥ぼ€	ゐゑ¥ぼ€
Y9Ð! ¤[!/Y	ゕゔゔゔれ	! □[Y	D/t	t[w	a ⊡				ゐ	ゑ	ゐ					ゔ			ゔ	ゔ	ゔ	ゔ	ろ		{! [9! . [9		ゐゑ¥ぼ€	ゐゑ¥ぼ€	ゐゑ¥ぼ€	ゐゑ¥ぼ€
Y9Ð. ¥[Ð! ¤ Dw Ð	ゕゔゔゔれ	. [Ð	D/t	t[w	a ⊡			₮	ゐ	ゑ			²		ゔ			ゔ					ろ		{! [9! . [9		ゐゑ¥ぼ€	ゐゑ¥ぼ€	ゐゑ¥ぼ€	ゐゑ¥ぼ€
Y9Ð! ¤[!/Y	ゕゔゔゔれ	! □[Y	D/t	t[w	a ⊡	²	₮	₮	ゐ	ゑ	ゐ												ろ	ゖ	{! [9! . [9		ゐゑ¥ぼ€	ゐゑ¥ぼ€	ゐゑ¥ぼ€	ゐゑ¥ぼ€
Y9Ð. ¥[Ð! ¤ Dw Ð	ゕゔゔゔれ	. [Ð	D/t	t[w	a ⊡				ゐ	ゑ	ゐ				ゔ										{! [9! . [9		ゐゑ¥ぼ€	ゐゑ¥ぼ€	ゐゑ¥ぼ€	ゐゑ¥ぼ€
Y9Ð. ¥[Ð! ¤ Dw Ð	ゕゔゔゔれ	. [Ð	D/t	t[w	a ⊡										ゔ	ゔ									{! [9! . [9		ゐゑ¥ぼ€	ゐゑ¥ぼ€	ゐゑ¥ぼ€	ゐゑ¥ぼ€
Y9Ð. ¥[Ð! ¤ Dw Ð	ゕゔゔゔれ	. [Ð	D/t	t[w	a ⊡				ゐ	ゑ	ゐ	ん			ゔ										{! [9! . [9		ゐゑ¥ぼ€	ゐゑ¥ぼ€	ゐゑ¥ぼ€	ゐゑ¥ぼ€
Y9Ð! ¤[!/Y	ゕゔゔゔゔ	! □[Y	D/t	t[w	a ⊡	²									ゔ	ゔ	ゔ								{! [9! . [9		ゐゑ¥ぼ€	ゐゑ¥ぼ€	ゐゑ¥ぼ€	ゐゑ¥ぼ€
Y9Ð! ¤[!/Y	ゕゔゔゔど	! □[Y	D/t	t[w	a ⊡	²	₮					ん			ゔ	ゔ	ゔ						ろ	ゖ	{! [9! . [9		ゐゑ¥ぼ€	ゐゑ¥ぼ€	ゐゑ¥ぼ€	ゐゑ¥ぼ€
Y9Ð! ¤[!/Y	ゕゔゔゔど	! □[Y	D/t	t[w	a ⊡																				{! [9! . [9		ゐゑ¥ぼ€	ゐゑ¥ぼ€	ゐゑ¥ぼ€	ゐゑ¥ぼ€
Y9Ð! ¤[!/Y	ゕゔゔゔど	! □[Y	D/t	t[w	a ⊡		₮						²		ゔ										{! [9! . [9		ゐゑ¥ぼ€	ゐゑ¥ぼ€	ゐゑ¥ぼ€	ゐゑ¥ぼ€
Y9Ð! ¤[!/Y	ゕゔゔゔど	! □[Y	D/t	t[w	a ⊡																			ゖ	{! [9! . [9		ゐゑ¥ぼ€	ゐゑ¥ぼ€	ゐゑ¥ぼ€	ゐゑ¥ぼ€
Y9Ð! ¤[!/Y	ゕゔゔゔみ	! □[Y	D/t	t[w	a ⊡							ん												ゖ	{! [9! . [9		ゐゑ¥ぼ€	ゐゑ¥ぼ€	ゐゑ¥ぼ€	ゐゑ¥ぼ€
Y9Ð! ¤[!/Y	ゕゔゔゔむ	! □[Y	D/t	t[w	a ⊡	²	₮	₮	ゐ	ゑ	ゐ												ろ	ゖ	{! [9! . [9		ゐゑ¥ぼ€	ゐゑ¥ぼ€	ゐゑ¥ぼ€	ゐゑ¥ぼ€
Y9Ð! ¤[!/Y	ゕゔゔゔめ	! □[Y	D/t	t[w	a ⊡						ゐ													ゖ	{! [9! . [9		ゐゑ¥ぼ€	ゐゑ¥ぼ€	ゐゑ¥ぼ€	ゐゑ¥ぼ€
Y9Ð! ¤[!/Y	ゕゔゔゔも	! □[Y	D/t	t[w	a ⊡	²	₮	₮		ゑ		ん			ゔ			ゔ	ゔ	ゔ	ゔ		ろ		{! [9! . [9		ゐゑ¥ぼ€	ゐゑ¥ぼ€	ゐゑ¥ぼ€	ゐゑ¥ぼ€
Y9Ð! ¤[!/Y	ゕゔゔゔや	! □[Y	D/t	t[w	a ⊡																				{! [9! . [9		ゐゑ¥ぼ€	ゐゑ¥ぼ€	ゐゑ¥ぼ€	ゐゑ¥ぼ€
Y9Ð! ¤[!/Y	ゕゔゔゔゆ	! □[Y	D/t	t[w	a ⊡					ゑ															{! [9! . [9		ゐゑ¥ぼ€	ゐゑ¥ぼ€	ゐゑ¥ぼ€	ゐゑ¥ぼ€
Y9Ð! ¤[!/Y	ゕゔゔゔよ	! □[Y	D/t	t[w	a ⊡								²		ゔ										{! [9! . [9		ゐゑ¥ぼ€	ゐゑ¥ぼ€	ゐゑ¥ぼ€	ゐゑ¥ぼ€
Y9Ð! ¤[!/Y	ゕゔゔゔら	! □[Y	D/t	t[w	a ⊡																				{! [9! . [9		ゐゑ¥ぼ€	ゐゑ¥ぼ€	ゐゑ¥ぼ€	ゐゑ¥ぼ€
Y9Ð! ¤[!/Y	ゕゔゔゔり	! □[Y	D/t	t[w	a ⊡																				{! [9! . [9		ゐゑ¥ぼ€	ゐゑ¥ぼ€	ゐゑ¥ぼ€	ゐゑ¥ぼ€
Y9Ð! ¤[!/Y	ゕゔゔゔる	! □[Y	D/t	t[w	a ⊡																				{! [9! . [9		ゐゑ¥ぼ€	ゐゑ¥ぼ€	ゐゑ¥ぼ€	ゐゑ¥ぼ€
Y9Ð! ¤[!/Y	ゕゔゔゔれ	! □[Y	D/t	t[w	a ⊡																				{! [9! . [9		ゐゑ¥ぼ€	ゐゑ¥ぼ€	ゐゑ¥ぼ€	ゐゑ¥ぼ€
Y9Ð! ¤[!/Y	ゕゔゔゔれ	! □[Y	D/t	t[w	a ⊡																				{! [9! . [9		ゐゑ¥ぼ€	ゐゑ¥ぼ€	ゐゑ¥ぼ€	ゐゑ¥ぼ€
Y9Ð! ¤[!/Y	ゕゔゔゔれ	! □[Y	D/t	t[w	a ⊡																				{! [9! . [9		ゐゑ¥ぼ€	ゐゑ¥ぼ€	ゐゑ¥ぼ€	ゐゑ¥ぼ€
Y9Ð! ¤[!/Y	ゕゔゔゔれ	! □[Y	D/t	t[w	a ⊡																				{! [9! . [9		ゐゑ¥ぼ€	ゐゑ¥ぼ€	ゐゑ¥ぼ€	ゐゑ¥ぼ€
Y9Ð! ¤[!/Y	ゕゔゔゔれ	! □[Y	D/t	t[w	a ⊡																				{! [9! . [9		ゐゑ¥ぼ€	ゐゑ¥ぼ€	ゐゑ¥ぼ€	ゐゑ¥ぼ€
Y9Ð! ¤[!/Y	ゕゔゔゔれ	! □[Y	D/t	t[w	a ⊡																				{! [9! . [9		ゐゑ¥ぼ€	ゐゑ¥ぼ€	ゐゑ¥ぼ€	ゐゑ¥ぼ€
Y9Ð! ¤[!/Y	ゕゔゔゔれ	! □[Y	D/t	t[w	a ⊡																				{! [9! . [9		ゐゑ¥ぼ€	ゐゑ¥ぼ€	ゐゑ¥ぼ€	ゐゑ¥ぼ€
Y9Ð! ¤[!/Y	ゕゔゔゔれ	! □[Y	D/t	t[w	a ⊡																				{! [9! . [9		ゐゑ¥ぼ€	ゐゑ¥ぼ€	ゐゑ¥ぼ€	ゐゑ¥ぼ€
Y9Ð! ¤[!/Y	ゕゔゔゔれ	! □[Y	D/t	t[w	a ⊡																				{! [9! . [9		ゐゑ¥ぼ€	ゐゑ¥ぼ€	ゐゑ¥ぼ€	ゐゑ¥ぼ€
Y9Ð! ¤[!/Y	ゕゔゔゔれ	! □[Y	D/t	t[w	a ⊡																				{! [9! . [9		ゐゑ¥ぼ€	ゐゑ¥ぼ€	ゐゑ¥ぼ€	ゐゑ¥ぼ€
Y9Ð! ¤[!/Y	ゕゔゔゔれ	! □[Y	D/t	t[w	a ⊡																				{! [9! . [9		ゐゑ¥ぼ€	ゐゑ¥ぼ€	ゐゑ¥ぼ€	ゐゑ¥ぼ€
Y9Ð! ¤[!/Y	ゕゔゔゔれ	! □[Y	D/t	t[w	a ⊡																				{! [9! . [9		ゐゑ¥ぼ€	ゐゑ¥ぼ€	ゐゑ¥ぼ€	ゐゑ¥ぼ€
Y9Ð! ¤[!/Y	ゕゔゔゔれ	! □[Y	D/t	t[w	a ⊡																				{! [9! . [9		ゐゑ¥ぼ€	ゐゑ¥ぼ€	ゐゑ¥ぼ€	ゐゑ¥ぼ€
Y9Ð! ¤[!/Y	ゕゔゔゔれ	! □[Y	D/t	t[w	a ⊡																				{! [9! . [9		ゐゑ¥ぼ€	ゐゑ¥ぼ€	ゐゑ¥ぼ€	ゐゑ¥ぼ€
Y9Ð! ¤[!/Y	ゕゔゔゔわ	! □[Y	D/t	t[w	a ⊡																				{! [9! . [9		ゐゑ¥ぼ€	ゐゑ¥ぼ€	ゐゑ¥ぼ€	ゐゑ¥ぼ€
Y9Ð! ¤[!/Y	ゕゔゔゔゐ	! □[Y	D/t	t[w	a ⊡																				{! [9! . [9		ゐゑ¥ぼ€	ゐゑ¥ぼ€	ゐゑ¥ぼ€	ゐゑ¥ぼ€
Y9Ð! ¤[!/Y	ゕゔゔゔゑ	! □[Y	D/t	t[w	a ⊡																				{! [9! . [9		ゐゑ¥ぼ€	ゐゑ¥ぼ€	ゐゑ¥ぼ€	ゐゑ¥ぼ€
Y9Ð! ¤[!/Y	ゕゔゔゔを	! □[Y	D/t	t[w	a ⊡																				{! [9! . [9		ゐゑ¥ぼ€	ゐゑ¥ぼ€	ゐゑ¥ぼ€	ゐゑ¥ぼ€
Y9Ð! ¤[!/Y	ゕゔゔゔん	! □[Y	D/t	t[w	a ⊡																				{! [9! . [9		ゐゑ¥ぼ€	ゐゑ¥ぼ€	ゐゑ¥ぼ€	ゐゑ¥ぼ€
Y9Ð! ¤[!/Y	ゕゔゔゔゔ゛	! □[Y	D/t	t[w	a ⊡																				{! [9! . [9		ゐゑ¥ぼ€	ゐゑ¥ぼ€	ゐゑ¥ぼ€	ゐゑ¥ぼ€
Y9Ð! ¤[!/Y	ゕゔゔゔゔ゛゛	! □[Y	D/t	t[w	a ⊡																				{! [9! . [9		ゐゑ¥ぼ€	ゐゑ¥ぼ€	ゐゑ¥ぼ€	ゐゑ¥ぼ€
Y9Ð! ¤[!/Y	ゕゔゔゔれ	! □[Y	D/t	t[w	a ⊡																				{! [9! . [9		ゐゑ¥ぼ€	ゐゑ¥ぼ€	ゐゑ¥ぼ€	ゐゑ¥ぼ€
Y9Ð! ¤[!/Y	ゕゔゔゔれ	! □[Y	D/t	t[w	a ⊡																				{! [9! . [9		ゐゑ¥ぼ€	ゐゑ¥ぼ€	ゐゑ¥ぼ€	ゐゑ¥ぼ€

molex

a ÆÆ¾¼½¼Æ¾½ [! 5 9{9! [95 ! {{Ða ! ¤{9! [
. ha ! b5 tŁb h- ¤{I 99¤

| ! {{9a . [Ð t! w¥ b- a . 9w | /ha thb9b¤ | | |

TABLE OF CONTENTS	
SHEET NO.	SHEET DESCRIPTION
1	NOTES
2	KEY CONFIGURATIONS
3	BLADE SEALED ASSEMBLY
4	SYSTEM PACKAGING
5	BOM

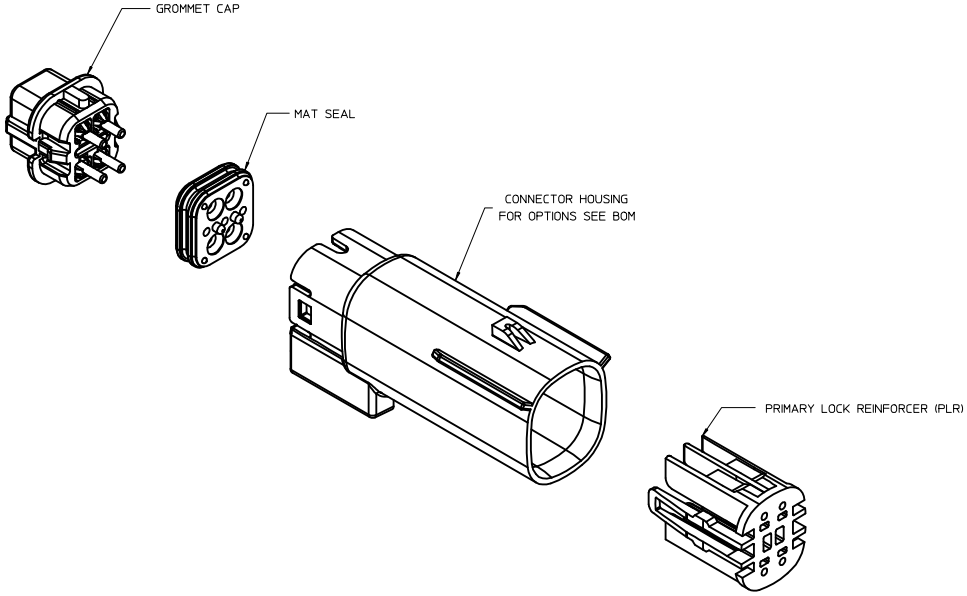

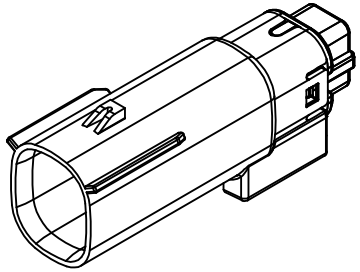

NOTES: VALID UNLESS OTHERWISE SPECIFIED

1. GENERAL:
a. APPLICATION SPECIFICATION SEE: AS-33472-100
CONTAINS: PRODUCT INTRODUCTION, PRODUCT SUMMARY, CONNECTOR ASSEMBLY, PACKAGING INFORMATION, CONNECTOR MATING, SERVICE INSTRUCTIONS, ELECTRICAL CONTINUITY CHECKING, CRIMPING, AND TROUBLESHOOTING.
-DESIGNED TO MATE WITH RECEPTACLE SEALED ASSEMBLY SPECIFIED IN MOLEX DRAWING SD-33472-041.
-FOR 1.5mm BLADE TERMINALS TO BE USED WITH THIS ASSEMBLY SEE MOLEX DRAWING SD-33000-001.
- SYSTEM TO BE USED WITH WIRE WITHIN DIAMETER RANGE OF 1.4mm TO 2.69mm.
-ASSEMBLY SHIPPED WITH PLR IN PRE-LOCK POSITION
-IN THE EVENT THAT THE PLR IS FOUND IN THE SEATED (FINAL LOCK) POSITION, REFER TO MOLEX SPECIFICATION PS-34646-001, AVAILABLE AT www.molex.com <http://www.molex.com>
-ASSEMBLY CONFORMS TO SAE/USCAR-2 REV.4 WITH THE FOLLOWING EXCEPTIONS: TERMINAL INSERTION FORCE FOR WIRE DIAMETER ABOVE 2.5mm NOT EXCEEDING 2.69mm SHALL NOT EXCEED 45 NEWTONS.
b. PRODUCT SPECIFICATION SEE: PS-33472-000
CONTAINS: PRODUCT INTRODUCTION, PRODUCT SUMMARY, RATINGS (CURRENT, TEMPERATURE, SEALING, AND FLAMMABILITY), AND PRODUCT VALIDATION.
c. PACKAGING SPECIFICATION PER MOLEX DRAWING: PK-31300-635
d. PARTS MUST BE IN COMPLIANCE TO MOLEX CHEMICAL SUBSTANCES FOR PRODUCTS AND PACKAGING SPECIFICATION: ES-40000-5016
e. DATA MUST BE SUBMITTED UNDER THE MOLEX PART NUMBER TO IMDS (COMPANY ID#13255)

2. DESIGN - MATERIALS:
a. CONNECTOR HOUSING, GROMMET CAP, PLR: SPS/NYLON 20% GLASS FILLED
b. MAT SEAL: INTERNALLY LUBRICATED SILICONE

3. DESIGN - GEOMETRY:
a. THIS IS A 100% CAD GENERATED PART. THE CAD MATHEMATICAL DATA IS THE MASTER FOR THIS PART. FOR DIMENSIONAL OR ANY INFORMATION NOT SHOWN ON THIS DRAWING, ANALYZE THE CAD MODEL.
b. GEOMETRIC DIMENSIONS AND TOLERANCES PER ASME Y14.5M - 1994
c. EDGES AND UNDIMENSIONED DETAILS PER ISO13715
d. CORNERS SHOWN AS SHARP TO BE R 0.2 MAX.
e. LETTERING SHALL BE 0.15 MAX RAISED IN 0.25 MAX RECESS PAD. THIS INCLUDES RECYCLING CODE, CAVITY ID, VENDOR IDENTIFICATION, AND CUSTOMER MATERIAL NUMBER.
f. VISUAL DEFECTS SHALL MEET COSMETIC STANDARD PS-45499-002 (Class B)
g. LASER MARKING: TBD

INSPECTION NUMBER LOG
LAST NUMBER USED:
ADDED:
REMOVED:

REV	DESCRIPTION
V	UPDATED STATUS AND COMMENTS COLUMNS
U	ADD NEW P/N 33482-4417
T	ADD NEW P/N 33482-4415 33482-4416
S	ADD NEW P/N 33482-4413
R	ADD NEW P/N 33482-4412
Q	UPDATED GROMMET CAP
P3	UPDATED DIMENSIONS
P2	UPDATED DIMENSIONS TO MATCH MODEL
P1	UPDATED NOTES
P	REDRAWN

REVISED
EC NO: UAU2016-0465
DRWN:APROFFITT 2015/10/06
CHKD:KBORUSZEWSKI 2015/10/06
APPR:KOSHY 2015/10/07
DESCRIPTION
REV V

QUALITY SYMBOLS
▽7 =0
▽6 =0
▽5 =0

GENERAL TOLERANCES (UNLESS SPECIFIED)	mm	INCH
4 PLACES	± ---	± ---
3 PLACES	± ---	± ---
2 PLACES	± 0.10	± ---
1 PLACE	± 0.3	± ---
0 PLACE	±	±
ANGULAR ± 3 °		

DRAFT WHERE APPLICABLE MUST REMAIN WITHIN DIMENSIONS

DIMENSION STYLE: MM ONLY
SCALE: 3:1
DESIGN UNITS: METRIC
THIRD ANGLE PROJECTION

DRAWN BY	MVANSLAMBROU	DATE 04-27-06
CHECKED BY	DGRIFFITHS	DATE 06-22-06
APPROVED BY	SMARCEAU	DATE 06-22-06
MATERIAL NO.	SEE BOM	

TITLE
MX150 2X2 BLADE SEALED ASSEMBLY MAT SEAL

molex

DOCUMENT NO. SD-33482-041
SHEET NO. 1 OF 5
SIZE D

THIS DRAWING CONTAINS INFORMATION THAT IS PROPRIETARY TO MOLEX INCORPORATED AND SHOULD NOT BE USED WITHOUT WRITTEN PERMISSION

KEY CONFIGURATIONS

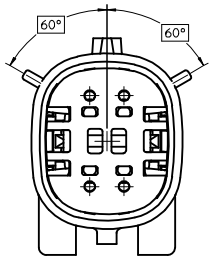

KEY A

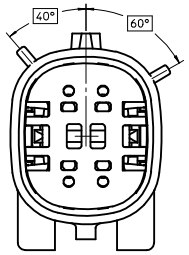

KEY B

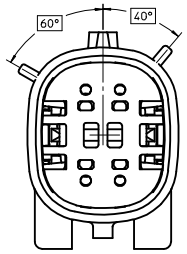

KEY C

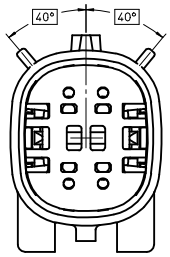

KEY D

REVISED EC NO: UAU2016-0465	REV	DESCRIPTION	QUALITY SYMBOLS	GENERAL TOLERANCES (UNLESS SPECIFIED)	DIMENSION STYLE MM ONLY	SCALE 4:1	DESIGN UNITS METRIC	THIRD ANGLE PROJECTION	
DRWN:APROFFITT 2015/10/06	V			mm / INCH	DRAWN BY MVANSLAMBROU DATE 04-27-06	TITLE MX150 2X2 BLADE SEALED ASSEMBLY MAT SEAL			
CHKD:KBOROSZENSKI 2015/10/06			4 PLACES	± --- / ± ---	CHECKED BY DGRIFFITHS DATE 06-22-06				
APPR:KOSHY 2015/10/07			3 PLACES	± --- / ± ---	APPROVED BY SMARCEAU DATE 06-22-06	molex			
			2 PLACES	± 0.10 / ± ---	MATERIAL NO. SEE BOM	DOCUMENT NO. SD-33482-041		SHEET NO. 2 OF 5	
			1 PLACE	± 0.3 / ± ---					
			0 PLACE	± / ±					
			ANGULAR ± 3 °	DRAFT WHERE APPLICABLE MUST REMAIN WITHIN DIMENSIONS	SIZE D	THIS DRAWING CONTAINS INFORMATION THAT IS PROPRIETARY TO MOLEX INCORPORATED AND SHOULD NOT BE USED WITHOUT WRITTEN PERMISSION			

BLADE SEALED ASSEMBLY

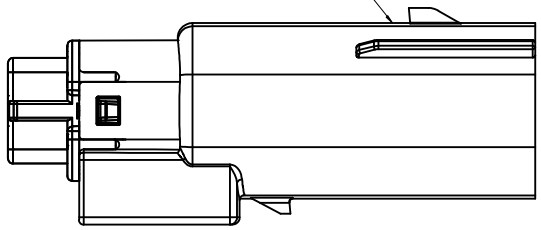

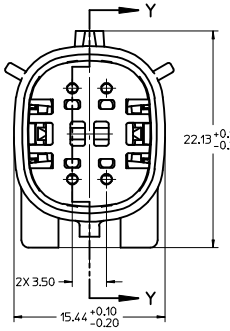

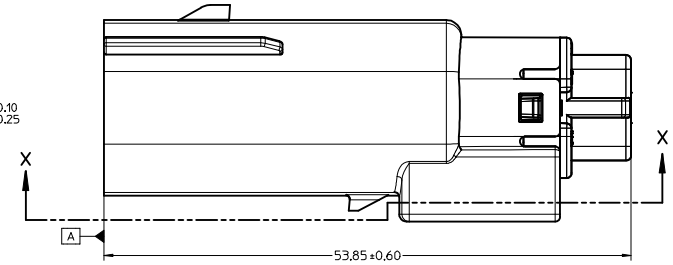

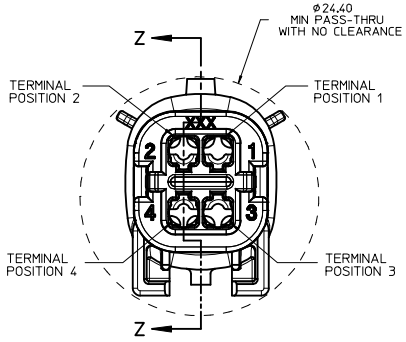

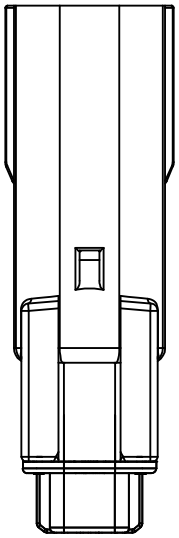

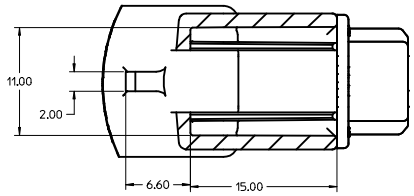

PARTIAL X-X
SCALE 4:1

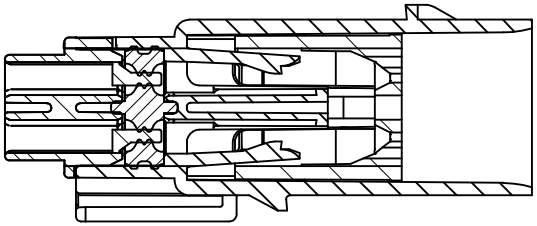

PRIMARY LOCK REINFORCER (PLR) SHOWN
IN PRE-STAGED POSITION

SECTION Z-Z

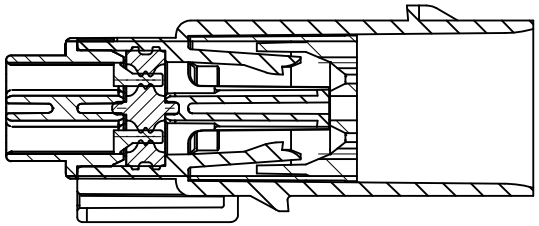

PRIMARY LOCK REINFORCER (PLR) SHOWN
IN FINAL LOCK POSITION

SECTION Y-Y

REVISED			
EC NO: UAU2016-0465			
DRWN:APROFFITT	2015/10/06		
CHKD:KBORUSZEWSKI	2015/10/06		
APPR:WKOSHY	2015/10/07		
REV	DESCRIPTION		
V			

QUALITY SYMBOLS	GENERAL TOLERANCES (UNLESS SPECIFIED)	mm	INCH
	4 PLACES	± ---	± ---
	3 PLACES	± ---	± ---
	2 PLACES	± 0.10	± ---
	1 PLACE	± 0.3	± ---
	0 PLACE	±	±
	ANGULAR ± 3 °		
	DRAFT WHERE APPLICABLE MUST REMAIN WITHIN DIMENSIONS		

DIMENSION STYLE	SCALE	DESIGN UNITS	
MM ONLY	4:1	METRIC	THIRD ANGLE PROJECTION

DRAWN BY MVANSLAMBROU	DATE 04-27-06	TITLE MX150 2X2 BLADE SEALED ASSEMBLY MAT SEAL
CHECKED BY DGRIFFITHS	DATE 06-22-06	
APPROVED BY SMARCEAU	DATE 06-22-06	molex
MATERIAL NO. SEE BOM		DOCUMENT NO. SD-33482-041
SIZE D		SHEET NO. 3 OF 5

THIS DRAWING CONTAINS INFORMATION THAT IS PROPRIETARY TO MOLEX INCORPORATED AND SHOULD NOT BE USED WITHOUT WRITTEN PERMISSION

SYSTEM PACKAGING

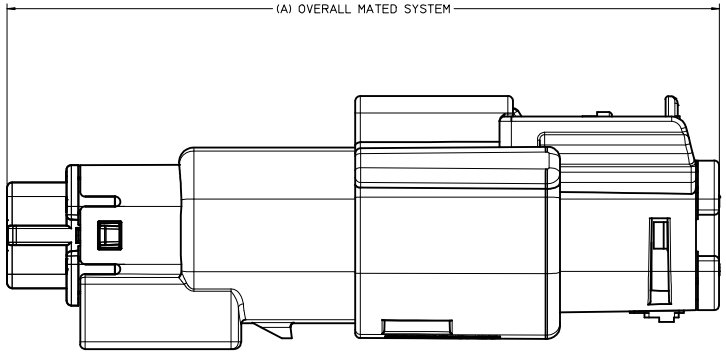

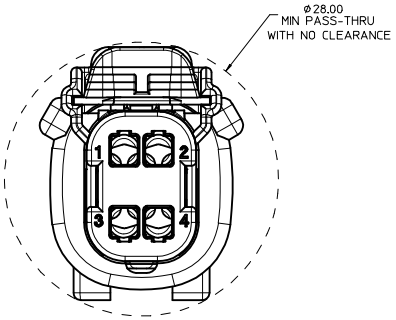

CHARTED DIMENSIONS		
RECEPTACLE ASSY PART NUMBER	CONFIGURATION	A
33472-0401 THRU 33472-0452	MX150 2X2 RECEPTACLE SEALED ASSEMBLY - STANDARD	72.78
33472-4401 THRU 33472-4412	MX150 2X2 RECEPTACLE SEALED ASSEMBLY - LENGTHENED	77.21

REVISED
EC NO: UAU2016-0465
DRWN:APROFFITT 2015/10/06
CHKD:KBOROSZEWSKI 2015/10/06
APPR:WKOSHY 2015/10/07
DESCRIPTION
REV
V

QUALITY SYMBOLS
▽=0
▽=0
▽=0

GENERAL TOLERANCES (UNLESS SPECIFIED)

	mm	INCH
4 PLACES	± ---	± ---
3 PLACES	± ---	± ---
2 PLACES	± 0.10	± ---
1 PLACE	± 0.3	± ---
0 PLACE	±	±
ANGULAR ± 3 °		

DRAFT WHERE APPLICABLE MUST REMAIN WITHIN DIMENSIONS

DIMENSION STYLE: MM ONLY
SCALE: 4:1
DESIGN UNITS: METRIC
THIRD ANGLE PROJECTION

DRAWN BY: MVANSLAMBROU DATE: 04-27-06
CHECKED BY: DGRIFFITHS DATE: 06-22-06
APPROVED BY: SMARCEAU DATE: 06-22-06

TITLE: MX150 2X2 BLADE SEALED ASSEMBLY MAT SEAL

molex

MATERIAL NO.: SEE BOM
DOCUMENT NO.: SD-33482-041
SHEET NO.: 4 OF 5
SIZE: D

THIS DRAWING CONTAINS INFORMATION THAT IS PROPRIETARY TO MOLEX INCORPORATED AND SHOULD NOT BE USED WITHOUT WRITTEN PERMISSION

BOM SHEET 1

ASSEMBLY PART NUMBER	COLOR	KEYING OPTION	CAVITY TYPE & STATUS (X = PLUGGED) 1	2	3	4	STATUS	COMMENTS
33482-0401	BLACK	A					PLANNED OBSOLESCENCE SEE DRAWING SD-33482-0002 FOR REPLACEMENT P/N	REPLACEMENT P/N'S ARE: 33482-04XX TO 33482-40XX 33482-44XX TO 33482-41XX
33482-0402	LIGHT GRAY	B						
33482-0403	BROWN	C						
33482-0404	GREEN	D						
33482-0406	BLACK	A		X				
33482-0407	LIGHT GRAY	B		X				
33482-0408	BROWN	C		X				
33482-0409	GREEN	D		X				
33482-0411	BLACK	A		X	X			
33482-0412	LIGHT GRAY	B		X	X			
33482-0413	BROWN	C		X	X			
33482-0414	GREEN	D		X	X			
33482-0416	BLACK	A	X	X	X	X		
33482-0417	LIGHT GRAY	B	X	X	X	X		
33482-0418	BROWN	C	X	X	X	X		
33482-0419	GREEN	D	X	X	X	X		
33482-0421	BLACK	A	X	X	X			
33482-0422	BLACK	A				X		
33482-0423	BLACK	A			X	X		
33482-0424	BLACK	A			X			
33482-0425	BLACK	A	X	X				
33482-4403	DARK GRAY	C						
33482-4404	STONE GRAY	D						
33482-4405	DARK GRAY	C		X				
33482-4406	STONE GRAY	D		X				
33482-4407	DARK GRAY	C		X	X			
33482-4408	STONE GRAY	D		X	X			
33482-4409	DARK GRAY	C	X	X	X	X		
33482-4410	STONE GRAY	D	X	X	X	X		
33482-4411	BLACK	A		X		X		
33482-4412	YELLOW	A						
33482-4413	LIGHT GRAY	B	X					
33482-4415	BLACK	A	X		X			
33482-4416	DARK GRAY	C		X		X		
33482-4417	LIGHT GRAY	B		X		X		

REVISED
EC NO: UAU2016-0465
DRWN:APROFFITT 2015/10/06
CHKD:KBOROSZEWSKI 2015/10/06
APPR:KOSHY 2015/10/07
DESCRIPTION
REV
V

QUALITY SYMBOLS
4 PLACES =0
3 PLACES =0
2 PLACES =0
1 PLACE =0
0 PLACE

GENERAL TOLERANCES (UNLESS SPECIFIED)

	mm	INCH
4 PLACES	± ---	± ---
3 PLACES	± ---	± ---
2 PLACES	± 0.10	± ---
1 PLACE	± 0.3	± ---
0 PLACE	±	±
ANGULAR ± 3 °		

DRAFT WHERE APPLICABLE MUST REMAIN WITHIN DIMENSIONS

DIMENSION STYLE: MM ONLY
SCALE
DESIGN UNITS: METRIC
THIRD ANGLE PROJECTION

DRAWN BY: MVANSLAMBROU DATE: 04-27-06
CHECKED BY: DGRIFFITHS DATE: 06-22-06
APPROVED BY: SMARCEAU DATE: 06-22-06
MATERIAL NO.: SEE BOM

TITLE: MX150 2X2 BLADE SEALED ASSEMBLY MAT SEAL

molex

DOCUMENT NO.: SD-33482-041
SHEET NO.: 5 OF 5
SIZE: D

THIS DRAWING CONTAINS INFORMATION THAT IS PROPRIETARY TO MOLEX INCORPORATED AND SHOULD NOT BE USED WITHOUT WRITTEN PERMISSION

TABLE OF CONTENTS	
SHEET NO.	SHEET DESCRIPTION
1	NOTES
2	KEY CONFIGURATIONS
3	BLADE SEALED ASSEMBLY
4	SYSTEM PACKAGING
5	BOM

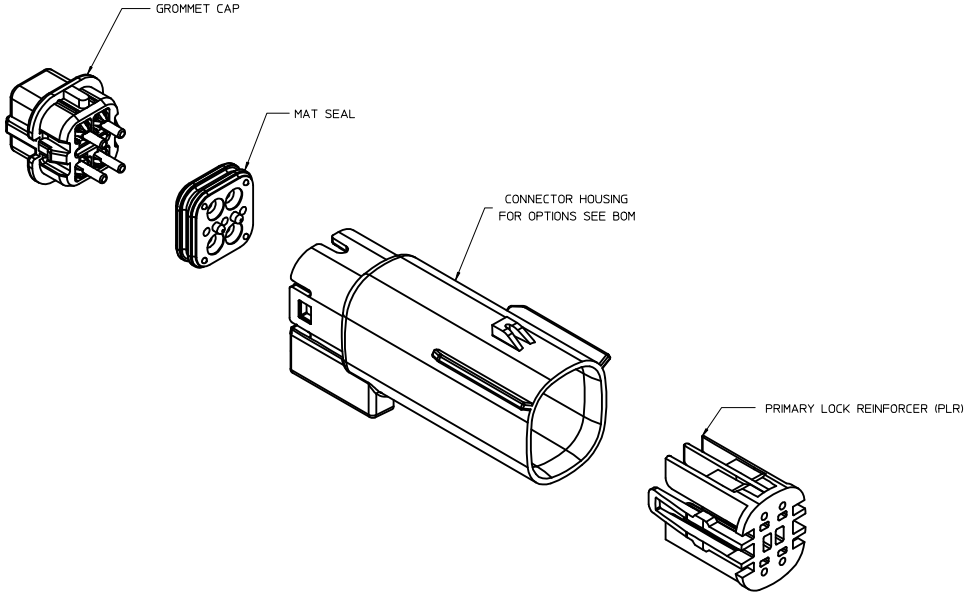

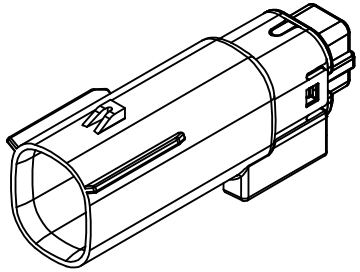

NOTES: VALID UNLESS OTHERWISE SPECIFIED

1. GENERAL:
a. APPLICATION SPECIFICATION SEE: AS-33472-100
CONTAINS: PRODUCT INTRODUCTION, PRODUCT SUMMARY, CONNECTOR ASSEMBLY, PACKAGING INFORMATION, CONNECTOR MATING, SERVICE INSTRUCTIONS, ELECTRICAL CONTINUITY CHECKING, CRIMPING, AND TROUBLESHOOTING.
-DESIGNED TO MATE WITH RECEPTACLE SEALED ASSEMBLY SPECIFIED IN MOLEX DRAWING SD-33472-041.
-FOR 1.5mm BLADE TERMINALS TO BE USED WITH THIS ASSEMBLY SEE MOLEX DRAWING SD-33000-001.
- SYSTEM TO BE USED WITH WIRE WITHIN DIAMETER RANGE OF 1.4mm TO 2.69mm.
-ASSEMBLY SHIPPED WITH PLR IN PRE-LOCK POSITION
-IN THE EVENT THAT THE PLR IS FOUND IN THE SEATED (FINAL LOCK) POSITION, REFER TO MOLEX SPECIFICATION PS-34646-001, AVAILABLE AT www.molex.com <http://www.molex.com>
-ASSEMBLY CONFORMS TO SAE/USCAR-2 REV.4 WITH THE FOLLOWING EXCEPTIONS: TERMINAL INSERTION FORCE FOR WIRE DIAMETER ABOVE 2.5mm NOT EXCEEDING 2.69mm SHALL NOT EXCEED 45 NEWTONS.
b. PRODUCT SPECIFICATION SEE: PS-33472-000
CONTAINS: PRODUCT INTRODUCTION, PRODUCT SUMMARY, RATINGS (CURRENT, TEMPERATURE, SEALING, AND FLAMMABILITY), AND PRODUCT VALIDATION.
c. PACKAGING SPECIFICATION PER MOLEX DRAWING: PK-31300-635
d. PARTS MUST BE IN COMPLIANCE TO MOLEX CHEMICAL SUBSTANCES FOR PRODUCTS AND PACKAGING SPECIFICATION: ES-40000-5016
e. DATA MUST BE SUBMITTED UNDER THE MOLEX PART NUMBER TO IMDS (COMPANY ID#13255)

2. DESIGN - MATERIALS:
a. CONNECTOR HOUSING, GROMMET CAP, PLR: SPS/NYLON 20% GLASS FILLED
b. MAT SEAL: INTERNALLY LUBRICATED SILICONE

3. DESIGN - GEOMETRY:
a. THIS IS A 100% CAD GENERATED PART. THE CAD MATHEMATICAL DATA IS THE MASTER FOR THIS PART. FOR DIMENSIONAL OR ANY INFORMATION NOT SHOWN ON THIS DRAWING, ANALYZE THE CAD MODEL.
b. GEOMETRIC DIMENSIONS AND TOLERANCES PER ASME Y14.5M - 1994
c. EDGES AND UNDIMENSIONED DETAILS PER ISO13715
d. CORNERS SHOWN AS SHARP TO BE R 0.2 MAX.
e. LETTERING SHALL BE 0.15 MAX RAISED IN 0.25 MAX RECESS PAD. THIS INCLUDES RECYCLING CODE, CAVITY ID, VENDOR IDENTIFICATION, AND CUSTOMER MATERIAL NUMBER.
f. VISUAL DEFECTS SHALL MEET COSMETIC STANDARD PS-45499-002 (Class B)
g. LASER MARKING: TBD

INSPECTION NUMBER LOG
LAST NUMBER USED:
ADDED:
REMOVED:

REV	DESCRIPTION
V	UPDATED STATUS AND COMMENTS COLUMNS
U	ADD NEW P/N 33482-4417
T	ADD NEW P/N 33482-4415 33482-4416
S	ADD NEW P/N 33482-4413
R	ADD NEW P/N 33482-4412
Q	UPDATED GROMMET CAP
P3	UPDATED DIMENSIONS
P2	UPDATED DIMENSIONS TO MATCH MODEL
P1	UPDATED NOTES
P	REDRAWN

REVISED
EC NO: UAU2016-0465
DRWN:APROFFITT 2015/10/06
CHKD:KBORUSZEWSKI 2015/10/06
APPR:KOSHY 2015/10/07
DESCRIPTION
REV V

QUALITY SYMBOLS
▽7 =0
▽6 =0
▽5 =0

GENERAL TOLERANCES (UNLESS SPECIFIED)	mm	INCH
4 PLACES	± ---	± ---
3 PLACES	± ---	± ---
2 PLACES	± 0.10	± ---
1 PLACE	± 0.3	± ---
0 PLACE	±	±
ANGULAR ± 3 °		

DRAFT WHERE APPLICABLE MUST REMAIN WITHIN DIMENSIONS

DIMENSION STYLE: MM ONLY
SCALE: 3:1
DESIGN UNITS: METRIC
THIRD ANGLE PROJECTION

DRAWN BY	MVANSLAMBROU	DATE 04-27-06
CHECKED BY	DGRIFFITHS	DATE 06-22-06
APPROVED BY	SMARCEAU	DATE 06-22-06
MATERIAL NO.	SEE BOM	

TITLE
MX150 2X2 BLADE SEALED ASSEMBLY MAT SEAL

molex

DOCUMENT NO. SD-33482-041
SHEET NO. 1 OF 5
SIZE D

THIS DRAWING CONTAINS INFORMATION THAT IS PROPRIETARY TO MOLEX INCORPORATED AND SHOULD NOT BE USED WITHOUT WRITTEN PERMISSION

KEY CONFIGURATIONS

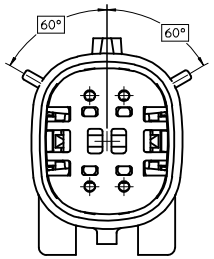

KEY A

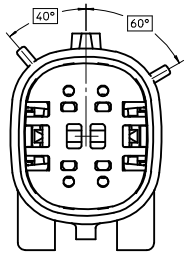

KEY B

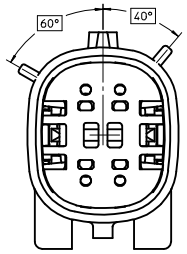

KEY C

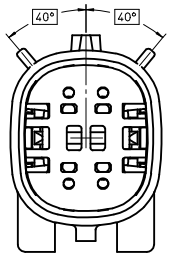

KEY D

REVISED EC NO: UAU2016-0465	REV	DESCRIPTION	QUALITY SYMBOLS	GENERAL TOLERANCES (UNLESS SPECIFIED)	DIMENSION STYLE MM ONLY	SCALE 4:1	DESIGN UNITS METRIC	THIRD ANGLE PROJECTION	
DRWN:APROFFITT 2015/10/06	V			mm / INCH	DRAWN BY MVANSLAMBROU DATE 04-27-06	TITLE MX150 2X2 BLADE SEALED ASSEMBLY MAT SEAL			
CHKD:KBOROSZENSKI 2015/10/06			4 PLACES	± --- / ± ---	CHECKED BY DGRIFFITHS DATE 06-22-06				
APPR:KOSHY 2015/10/07			3 PLACES	± --- / ± ---	APPROVED BY SMARCEAU DATE 06-22-06	molex			
			2 PLACES	± 0.10 / ± ---	MATERIAL NO. SEE BOM	DOCUMENT NO. SD-33482-041		SHEET NO. 2 OF 5	
			1 PLACE	± 0.3 / ± ---					
			0 PLACE	± / ±					
			ANGULAR ± 3 °	DRAFT WHERE APPLICABLE MUST REMAIN WITHIN DIMENSIONS	SIZE D	THIS DRAWING CONTAINS INFORMATION THAT IS PROPRIETARY TO MOLEX INCORPORATED AND SHOULD NOT BE USED WITHOUT WRITTEN PERMISSION			

BLADE SEALED ASSEMBLY

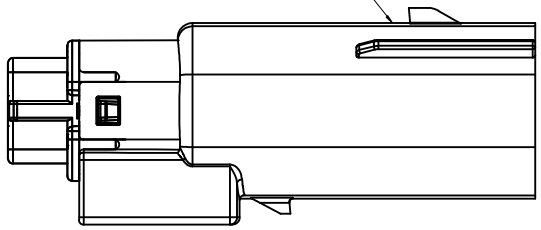

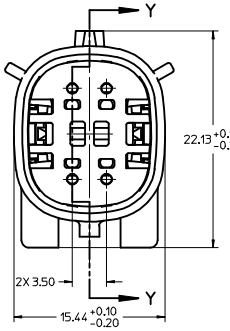

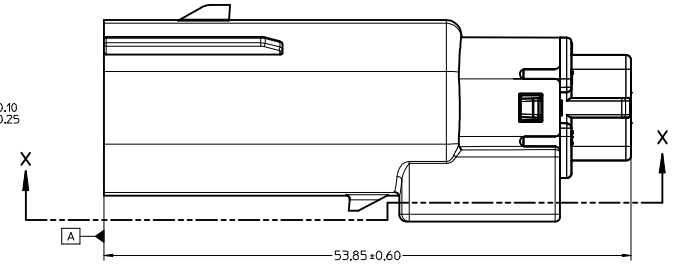

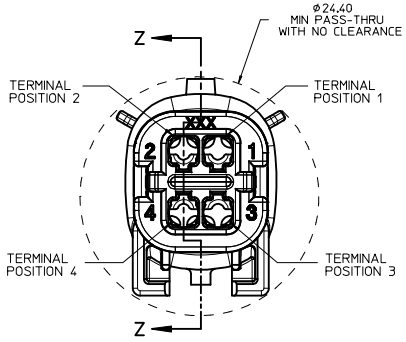

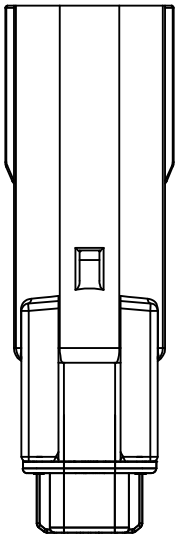

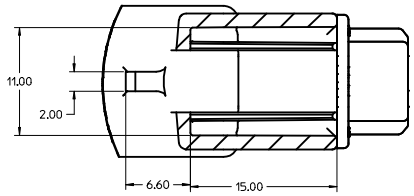

PARTIAL X-X
SCALE 4:1

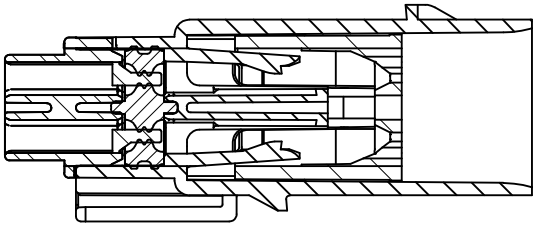

PRIMARY LOCK REINFORCER (PLR) SHOWN
IN PRE-STAGED POSITION

SECTION Z-Z

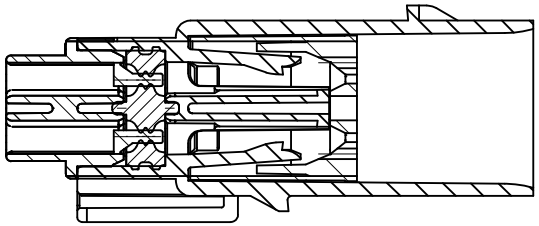

PRIMARY LOCK REINFORCER (PLR) SHOWN
IN FINAL LOCK POSITION

SECTION Y-Y

REVISED			
EC NO: UAU2016-0465			
DRWN:APROFFITT	2015/10/06		
CHKD:KBORUSZEWSKI	2015/10/06		
APPR:WKOSHY	2015/10/07		
REV	DESCRIPTION		
V			

QUALITY SYMBOLS	GENERAL TOLERANCES (UNLESS SPECIFIED)	mm	INCH
	4 PLACES	± ---	± ---
	3 PLACES	± ---	± ---
	2 PLACES	± 0.10	± ---
	1 PLACE	± 0.3	± ---
	0 PLACE	±	±
	ANGULAR ± 3 °		
	DRAFT WHERE APPLICABLE MUST REMAIN WITHIN DIMENSIONS		

DIMENSION STYLE	SCALE	DESIGN UNITS	
MM ONLY	4:1	METRIC	THIRD ANGLE PROJECTION

DRAWN BY MVANSLAMBROU	DATE 04-27-06	TITLE MX150 2X2 BLADE SEALED ASSEMBLY MAT SEAL
CHECKED BY DGRIFFITHS	DATE 06-22-06	
APPROVED BY SMARCEAU	DATE 06-22-06	molex
MATERIAL NO. SEE BOM		DOCUMENT NO. SD-33482-041
SIZE D		SHEET NO. 3 OF 5

THIS DRAWING CONTAINS INFORMATION THAT IS PROPRIETARY TO MOLEX INCORPORATED AND SHOULD NOT BE USED WITHOUT WRITTEN PERMISSION

SYSTEM PACKAGING

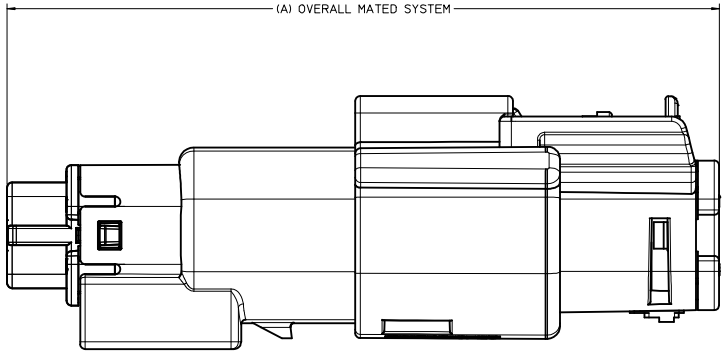

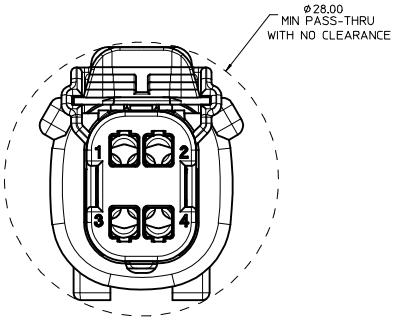

CHARTED DIMENSIONS		
RECEPTACLE ASSY PART NUMBER	CONFIGURATION	A
33472-0401 THRU 33472-0452	MX150 2X2 RECEPTACLE SEALED ASSEMBLY - STANDARD	72.78
33472-4401 THRU 33472-4412	MX150 2X2 RECEPTACLE SEALED ASSEMBLY - LENGTHENED	77.21

REVISED
EC NO: UAU2016-0465
DRWN:APROFFITT 2015/10/06
CHKD:KBOROSZEWSKI 2015/10/06
APPR:WKOSHY 2015/10/07
DESCRIPTION
REV
V

QUALITY SYMBOLS
▽=0
▽=0
▽=0

GENERAL TOLERANCES (UNLESS SPECIFIED)

	mm	INCH
4 PLACES	± ---	± ---
3 PLACES	± ---	± ---
2 PLACES	± 0.10	± ---
1 PLACE	± 0.3	± ---
0 PLACE	±	±
ANGULAR ± 3 °		

DRAFT WHERE APPLICABLE MUST REMAIN WITHIN DIMENSIONS

DIMENSION STYLE: MM ONLY
SCALE: 4:1
DESIGN UNITS: METRIC
THIRD ANGLE PROJECTION

DRAWN BY: MVANSLAMBROU DATE: 04-27-06
CHECKED BY: DGRIFFITHS DATE: 06-22-06
APPROVED BY: SMARCEAU DATE: 06-22-06

TITLE: MX150 2X2 BLADE SEALED ASSEMBLY MAT SEAL

molex

MATERIAL NO.: SEE BOM
DOCUMENT NO.: SD-33482-041
SHEET NO.: 4 OF 5
SIZE: D

THIS DRAWING CONTAINS INFORMATION THAT IS PROPRIETARY TO MOLEX INCORPORATED AND SHOULD NOT BE USED WITHOUT WRITTEN PERMISSION

BOM SHEET 1

ASSEMBLY PART NUMBER	COLOR	KEYING OPTION	CAVITY TYPE & STATUS (X = PLUGGED) 1	2	3	4	STATUS	COMMENTS
33482-0401	BLACK	A					PLANNED OBSOLESCENCE SEE DRAWING SD-33482-0002 FOR REPLACEMENT P/N	REPLACEMENT P/N'S ARE: 33482-04XX TO 33482-40XX 33482-44XX TO 33482-41XX
33482-0402	LIGHT GRAY	B						
33482-0403	BROWN	C						
33482-0404	GREEN	D						
33482-0406	BLACK	A		X				
33482-0407	LIGHT GRAY	B		X				
33482-0408	BROWN	C		X				
33482-0409	GREEN	D		X				
33482-0411	BLACK	A		X	X			
33482-0412	LIGHT GRAY	B		X	X			
33482-0413	BROWN	C		X	X			
33482-0414	GREEN	D		X	X			
33482-0416	BLACK	A	X	X	X	X		
33482-0417	LIGHT GRAY	B	X	X	X	X		
33482-0418	BROWN	C	X	X	X	X		
33482-0419	GREEN	D	X	X	X	X		
33482-0421	BLACK	A	X	X	X			
33482-0422	BLACK	A				X		
33482-0423	BLACK	A			X	X		
33482-0424	BLACK	A			X			
33482-0425	BLACK	A	X	X				
33482-4403	DARK GRAY	C						
33482-4404	STONE GRAY	D						
33482-4405	DARK GRAY	C		X				
33482-4406	STONE GRAY	D		X				
33482-4407	DARK GRAY	C		X	X			
33482-4408	STONE GRAY	D		X	X			
33482-4409	DARK GRAY	C	X	X	X	X		
33482-4410	STONE GRAY	D	X	X	X	X		
33482-4411	BLACK	A		X		X		
33482-4412	YELLOW	A						
33482-4413	LIGHT GRAY	B	X					
33482-4415	BLACK	A	X		X			
33482-4416	DARK GRAY	C		X		X		
33482-4417	LIGHT GRAY	B		X		X		

REVISED
EC NO: UAU2016-0465
DRWN:APROFFITT 2015/10/06
CHKD:KBOROSZEWSKI 2015/10/06
APPR:KOSHY 2015/10/07
DESCRIPTION
REV
V

QUALITY SYMBOLS
4 PLACES =0
3 PLACES =0
2 PLACES =0
1 PLACE =0
0 PLACE

GENERAL TOLERANCES (UNLESS SPECIFIED)

	mm	INCH
4 PLACES	± ---	± ---
3 PLACES	± ---	± ---
2 PLACES	± 0.10	± ---
1 PLACE	± 0.3	± ---
0 PLACE	±	±
ANGULAR ± 3 °		

DRAFT WHERE APPLICABLE MUST REMAIN WITHIN DIMENSIONS

DIMENSION STYLE: MM ONLY
SCALE
DESIGN UNITS: METRIC
THIRD ANGLE PROJECTION

DRAWN BY: MVANSLAMBROU DATE: 04-27-06
CHECKED BY: DGRIFFITHS DATE: 06-22-06
APPROVED BY: SMARCEAU DATE: 06-22-06
MATERIAL NO.: SEE BOM

TITLE: MX150 2X2 BLADE SEALED ASSEMBLY MAT SEAL

molex

DOCUMENT NO.: SD-33482-041
SHEET NO.: 5 OF 5
SIZE: D

THIS DRAWING CONTAINS INFORMATION THAT IS PROPRIETARY TO MOLEX INCORPORATED AND SHOULD NOT BE USED WITHOUT WRITTEN PERMISSION