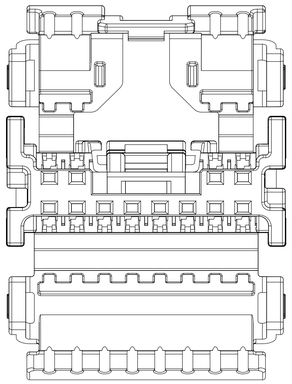

12 CIRCUIT RECEPTACLE WITHOUT LOCK BRIDGE

POLARIZATION OPTION A

USCAR COMPATIBLE

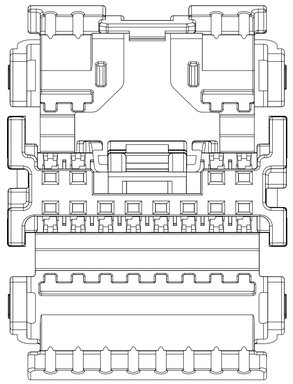

12 CIRCUIT RECEPTACLE WITHOUT LOCK BRIDGE

POLARIZATION OPTION B

USCAR COMPATIBLE

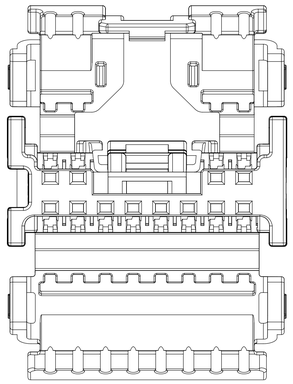

12 CIRCUIT RECEPTACLE WITHOUT LOCK BRIDGE

POLARIZATION OPTION C

USCAR COMPATIBLE

NOTES: VALID UNLESS OTHERWISE SPECIFIED

1. GENERAL:
   a. APPLICATION SPECIFICATION SEE: AS-34791-020
   b. PRODUCT SPECIFICATION SEE: PS-34791-020
   c. PACKAGING SPECIFICATION PER MOLEX DRAWING: SEE CHART
   d. PARTS MUST BE IN COMPLIANCE TO MOLEX CHEMICAL SUBSTANCES FOR PRODUCTS AND PACKAGING SPECIFICATION: QEHS-699000-301
   e. DATA MUST BE SUBMITTED UNDER THE MOLEX PART NUMBER TO IMDS (COMPANY ID#13255)
   f. FLAMMABILITY REQUIREMENT: PER ISO3795 OR GM3191
      1. BURN RATE 100 mm/MIN MAXIMUM
      2. MATERIAL MUST BE SELF EXTINGUISHING
   g. VISUAL DEFECTS SHALL MEET COSMETIC STANDARD PS-45499-002 (Class B)
   h. FOR TERMINAL USAGE, REFER TO MOLEX SALES DRAWING SD-560023-002

2. DESIGN - MATERIALS: SEE P/N TABLE

3. DESIGN - GEOMETRY:
   a. THIS IS A 100% CAD GENERATED PART. THE CAD MATHEMATICAL DATA IS THE MASTER FOR THIS PART. FOR DIMENSIONAL OR ANY INFORMATION NOT SHOWN ON THIS DRAWING, ANALYZE THE CAD MODEL.
   b. GEOMETRIC DIMENSIONS AND TOLERANCES PER ASME Y14.5M - 2009
   c. GENERAL TOLERANCES:
      LINEAR: PER DIN 16901 CODE B FOR PRECISION ENGINEERING (SEE TABLE)
      ANGULAR: ±3°
   d. EDGES AND UNDIMENSIONED DETAILS PER ISO13715
   e. CORNERS SHOWN AS SHARP TO BE R 0.2 MAX
   f. LETTERING SHALL BE 0.1 MAX RAISED IN 0.15 MAX RECESS PAD AND NOT PROTRUDE THE SURFACE. THIS INCLUDES RECYCLING CODE, PLANT AND CAVITY ID, VENDOR ID, CIRCUIT ID, AND PART SERIES NUMBER.
   g. DIMENSION APPLIES ONLY TO RECEPTACLES WITH LOCK BRIDGE OPTION.

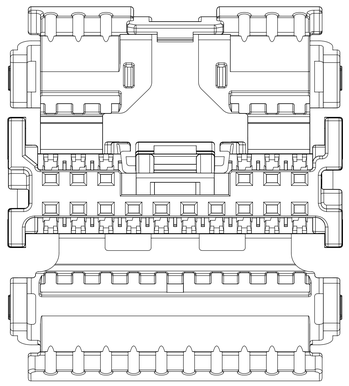

16 CIRCUIT RECEPTACLE WITHOUT LOCK BRIDGE

POLARIZATION OPTION A

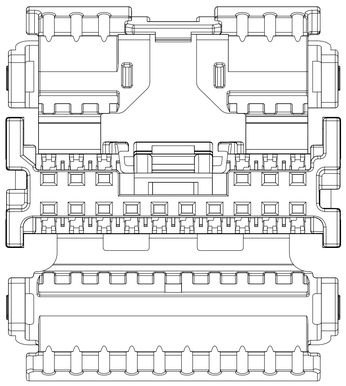

16 CIRCUIT RECEPTACLE WITHOUT LOCK BRIDGE

POLARIZATION OPTION B

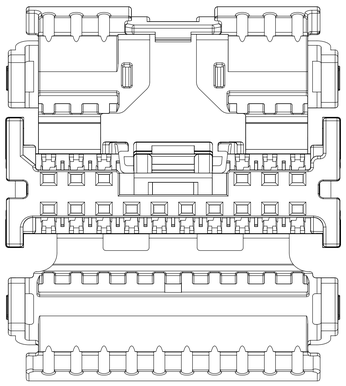

16 CIRCUIT RECEPTACLE WITHOUT LOCK BRIDGE

POLARIZATION OPTION C

HINGES OPEN

12 CIRCUIT RECEPTACLE SHOWN

(AS SHIPPED)

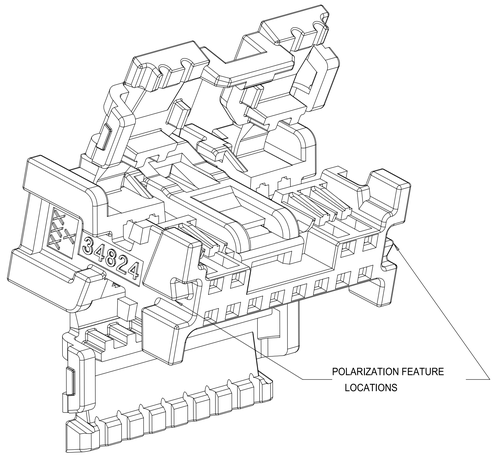

HINGES CLOSED

12 CIRCUIT RECEPTACLE SHOWN

(AS ASSEMBLED)

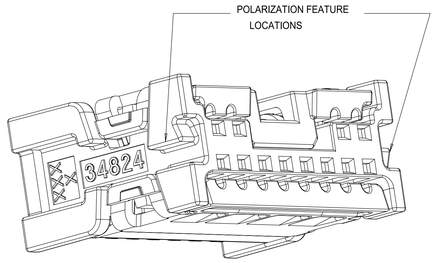

SCALE 7:1

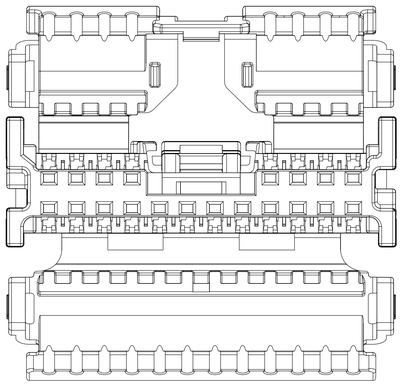

20 CIRCUIT RECEPTACLE WITHOUT LOCK BRIDGE

POLARIZATION OPTION A

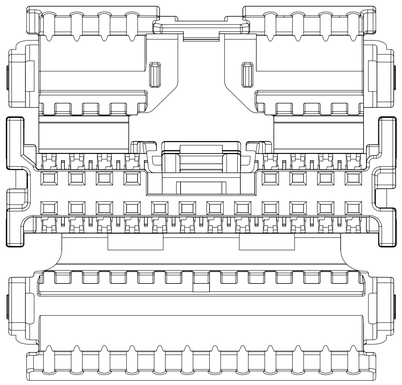

20 CIRCUIT RECEPTACLE WITHOUT LOCK BRIDGE

POLARIZATION OPTION B

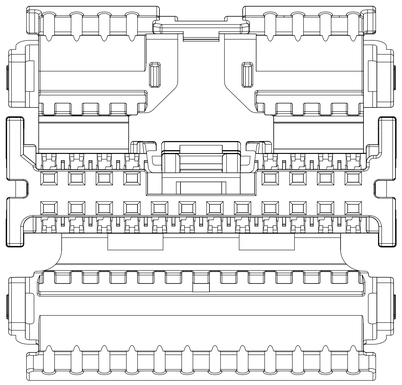

20 CIRCUIT RECEPTACLE WITHOUT LOCK BRIDGE

POLARIZATION OPTION C

SCALE 7:1

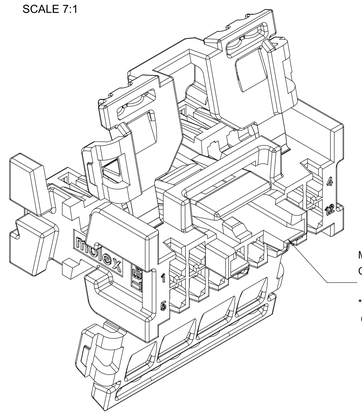

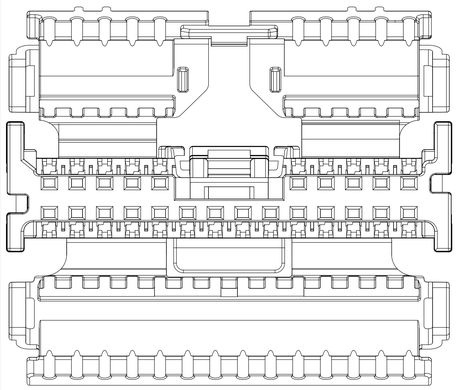

24 CIRCUIT RECEPTACLE WITHOUT LOCK BRIDGE

POLARIZATION OPTION A

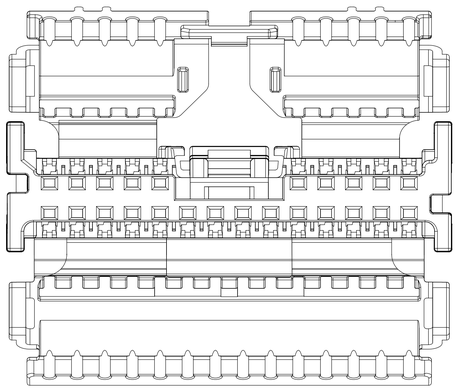

24 CIRCUIT RECEPTACLE WITHOUT LOCK BRIDGE

POLARIZATION OPTION B

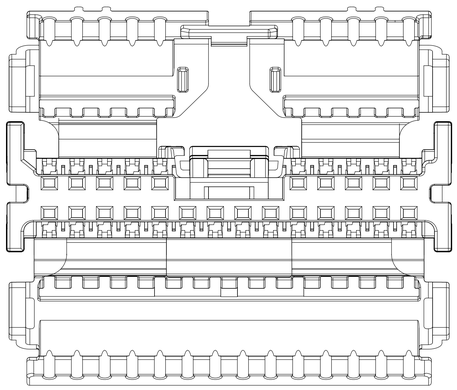

24 CIRCUIT RECEPTACLE WITHOUT LOCK BRIDGE

POLARIZATION OPTION C

INSPECTION BALLOON NUMBER		
PER DRAWING REVISION: L		
LAST BALLOON USED: 17	L5	VERTICAL PITCH DIMENSION ADDED
	L4	UPDATED P/N TABLE TO SHOW MATERIAL
ADDED BALLOON NUMBERS:	L	UPDATED 24 CKT
REMOVED BALLOON NUMBERS:	REV	DESCRIPTION

QUALITY SYMBOLS	
FA	= 0
FC	= 0
FP	= 0
▼	= 0
C	= 0
☒	= 0
■	= 0
C	= 0

THIS DRAWING CONTAINS INFORMATION THAT IS PROPRIETARY TO MOLEX ELECTRONIC TECHNOLOGIES, LLC AND SHOULD NOT BE USED WITHOUT WRITTEN PERMISSION

EC NO: 614746 2019/03/27
DRWN: SRUSS 2019/03/29
CHK'D: JDUNAJ 2019/03/29
APPR: JDUNAJ

L5 REV

GENERAL TOLERANCES (UNLESS SPECIFIED)

ANGULAR TOL ±	°
4 PLACES	±
3 PLACES	±
2 PLACES	± 0.1
1 PLACE	± 0.2
0 PLACES	±

DRAFT WHERE APPLICABLE MUST REMAIN WITHIN DIMENSIONS

DIMENSION UNITS	SCALE
MM ONLY	6:1
DRWN BY: TCUCU	DATE: 2011/03/10
CHK'D BY: TMACHUGA	DATE: 2011/03/11
APPR BY: SMARCEAU	DATE: 2012/05/21
DRAWING SIZE: E	THIRD ANGLE PROJECTION

molex®

MINI50 DUAL ROW
RECEPTACLE SALES DRAWING

PRODUCT CUSTOMER DRAWING

SERIES	MATERIAL NUMBER	CUSTOMER
34824	SEE TABLE	GENERAL MARKET

DOCUMENT NUMBER	DOC TYPE	DOC PART	SHEET NUMBER
SD-34824-002	PSD	001	1 OF 4

RELEASE STATUS	P1	RELEASE DATE	2019/03/29 20:37:18

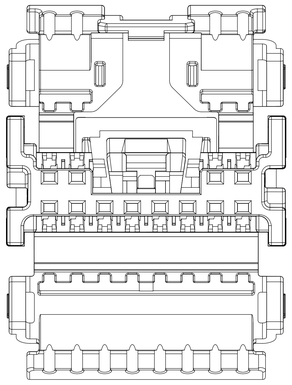

12 CIRCUIT RECEPTACLE WITH LOCK BRIDGE
POLARIZATION OPTION A
USCAR COMPATIBLE

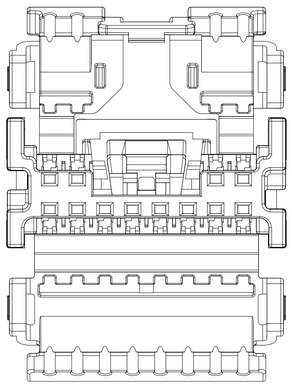

12 CIRCUIT RECEPTACLE WITH LOCK BRIDGE
POLARIZATION OPTION B
USCAR COMPATIBLE

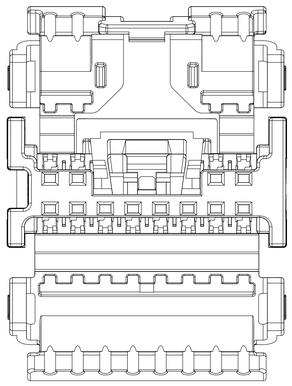

12 CIRCUIT RECEPTACLE WITH LOCK BRIDGE
POLARIZATION OPTION C
USCAR COMPATIBLE

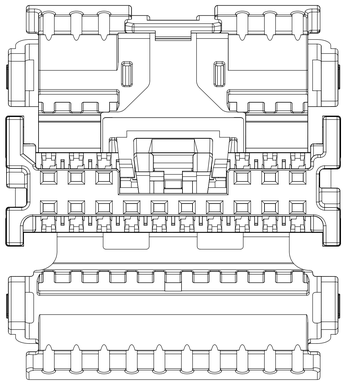

16 CIRCUIT RECEPTACLE WITH LOCK BRIDGE
POLARIZATION OPTION A

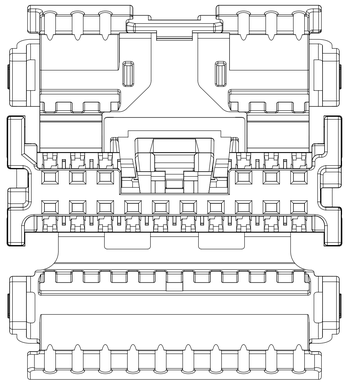

16 CIRCUIT RECEPTACLE WITH LOCK BRIDGE
POLARIZATION OPTION B

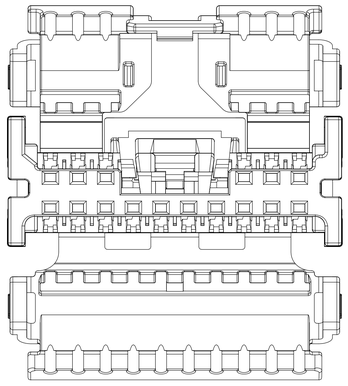

16 CIRCUIT RECEPTACLE WITH LOCK BRIDGE
POLARIZATION OPTION C

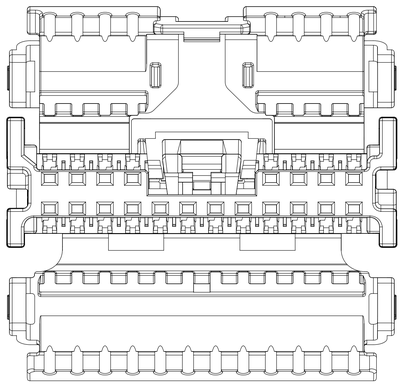

20 CIRCUIT RECEPTACLE WITH LOCK BRIDGE
POLARIZATION OPTION A

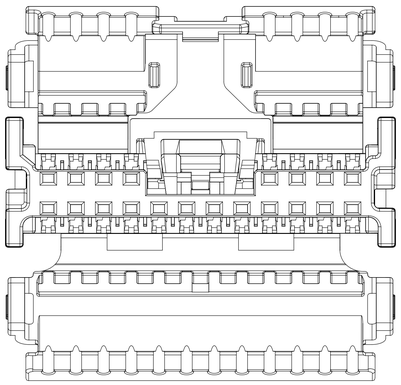

20 CIRCUIT RECEPTACLE WITH LOCK BRIDGE
POLARIZATION OPTION B

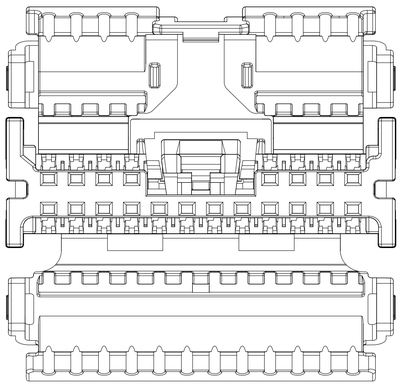

20 CIRCUIT RECEPTACLE WITH LOCK BRIDGE
POLARIZATION OPTION C

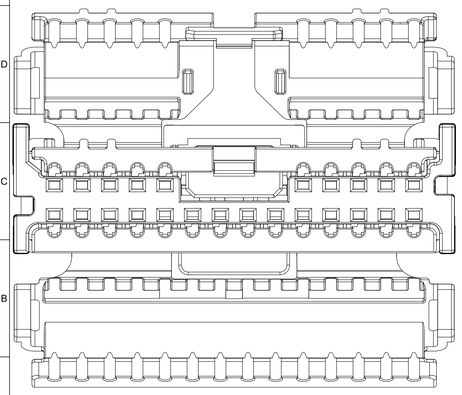

24 CIRCUIT RECEPTACLE WITH LOCK BRIDGE
POLARIZATION OPTION A

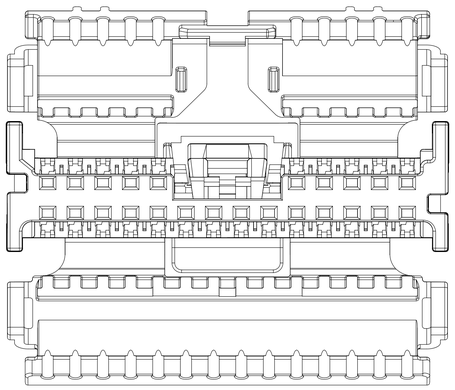

24 CIRCUIT RECEPTACLE WITH LOCK BRIDGE
POLARIZATION OPTION B

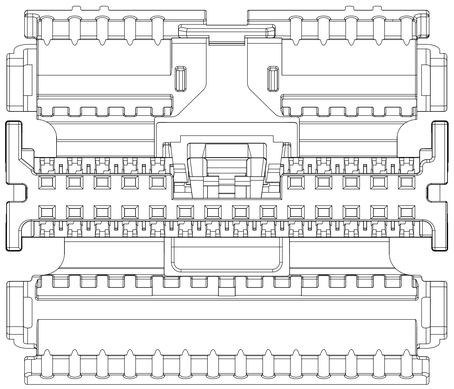

24 CIRCUIT RECEPTACLE WITH LOCK BRIDGE
POLARIZATION OPTION C

RELEASE STATUS	P1	RELEASE DATE	2019/03/29 20:37:18

THIS DRAWING CONTAINS INFORMATION THAT IS PROPRIETARY TO MOLEX ELECTRONIC TECHNOLOGIES, LLC AND SHOULD NOT BE USED WITHOUT WRITTEN PERMISSION

QUALITY SYMBOLS	
FA	= 0
FC	= 0
FP	= 0
▼	= 0
C	= 0
☒	= 0
■	= 0
C	= 0

EC NO: 614746 2019/03/27
DRWN: SRUSS 2019/03/29
CHK'D: JDUNAJ 2019/03/29
APPR: JDUNAJ

REV: L5

GENERAL TOLERANCES (UNLESS SPECIFIED)

ANGULAR TOL ±		°
4 PLACES	±	
3 PLACES	±	
2 PLACES	±	0.1
1 PLACE	±	0.2
0 PLACES	±	

DRAFT WHERE APPLICABLE MUST REMAIN WITHIN DIMENSIONS

DIMENSION UNITS	MM ONLY
SCALE	6:1
DRWN BY	TCUCU
DATE	2011/03/10
CHK'D BY	TMACHUGA
DATE	2011/03/11
APPR BY	SMARCEAU
DATE	2012/05/21
DRAWING SIZE	E
THIRD ANGLE PROJECTION	

molex®

MINI50 DUAL ROW
RECEPTACLE SALES DRAWING

PRODUCT CUSTOMER DRAWING

SERIES	MATERIAL NUMBER	CUSTOMER
34824	SEE TABLE	GENERAL MARKET

DOCUMENT NUMBER	DOC TYPE	DOC PART	SHEET NUMBER
SD-34824-002	PSD	001	2 OF 4

(NON-BRIDGED OPTION SHOWN BELOW)

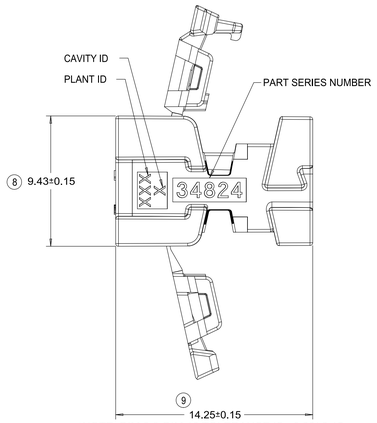

*NOTE: DIM 9 & DIM 12 TOLERANCE IS +0.30/-0.15
FOR THE FOLLOWING P/NS:
34824-0164-5-6; 34824-1164/5/6
34824-0204/5/6; 34824-1204/5/6
34824-0244/5/6; 34824-1244/5/6

(BRIDGED OPTION SHOWN BELOW)

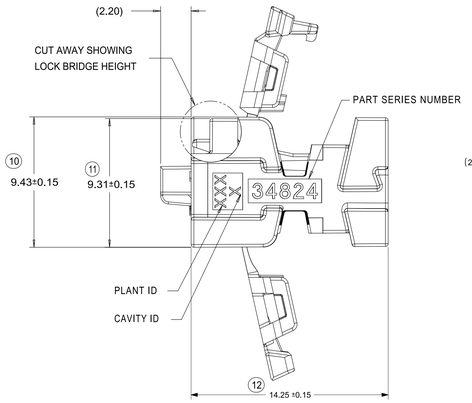

*NOTE: DIM 9 & DIM 12 TOLERANCE IS +0.30/-0.15
FOR THE FOLLOWING P/NS:
34824-0164/5/6; 34824-1164/5/6
34824-0204/5/6; 34824-1204/5/6
34824-0244/5/6; 34824-1244/5/6

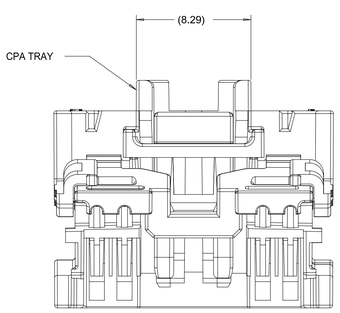

(BRIDGED OPTION SHOWN)

12 CIRCUIT USCAR COMPATIBLE RECEPTACLE

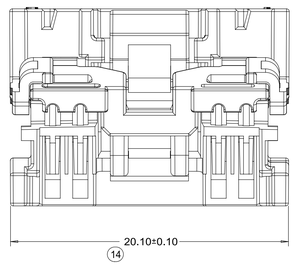

16 CIRCUIT RECEPTACLE

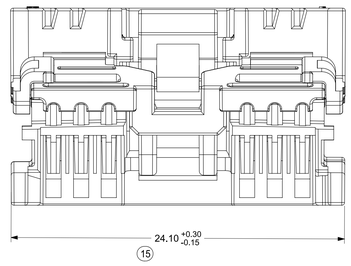

20 CIRCUIT RECEPTACLE

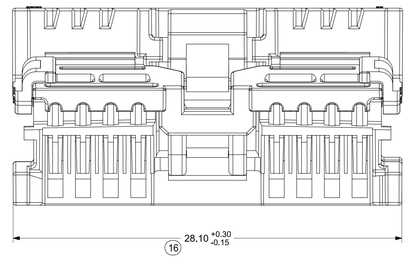

24 CIRCUIT RECEPTACLE

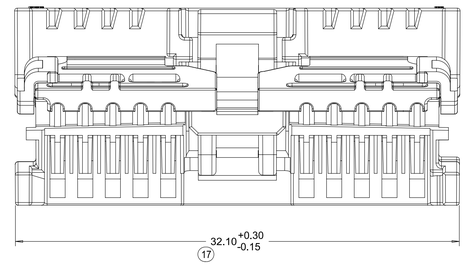

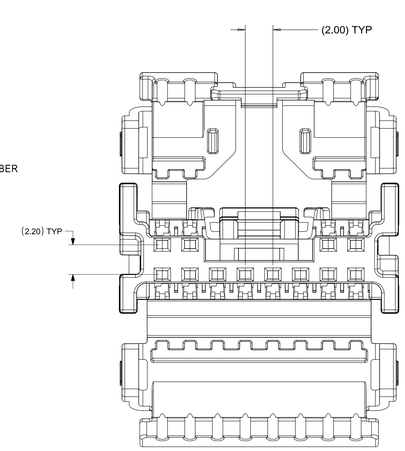

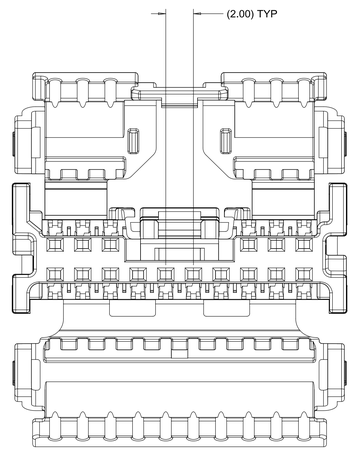

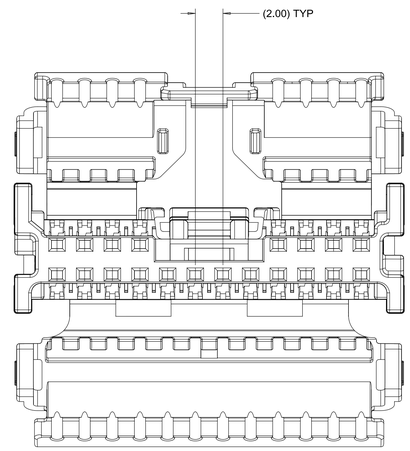

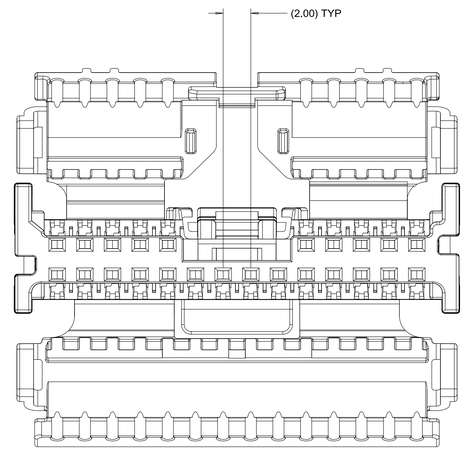

12 CKT RECEPTACLE SHOWN BELOW
16, 20, AND 24 CKT RECEPTACLE
HAS SIMILAR CIRCUIT ID LOCATION

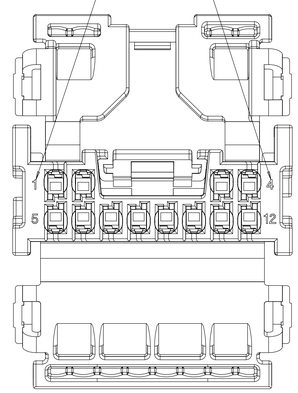

HINGES CLOSED
(BRIDGED/NON-BRIDGED)

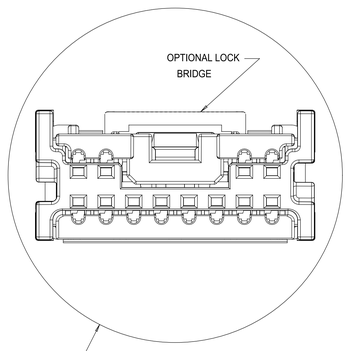

PASS THRU DIAMETER
∅24.18
1 mm ADDITIONAL CLEARANCE
ADDED TO TIGHTEST FIT CIRCLE

HINGES CLOSED
(BRIDGED/NON-BRIDGED)

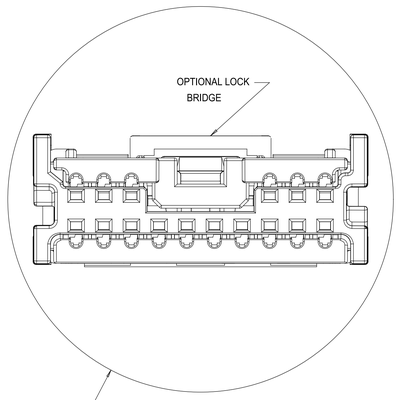

PASS THRU DIAMETER
∅27.88
1 mm ADDITIONAL CLEARANCE
ADDED TO TIGHTEST FIT CIRCLE

HINGES CLOSED
(BRIDGED/NON-BRIDGED)

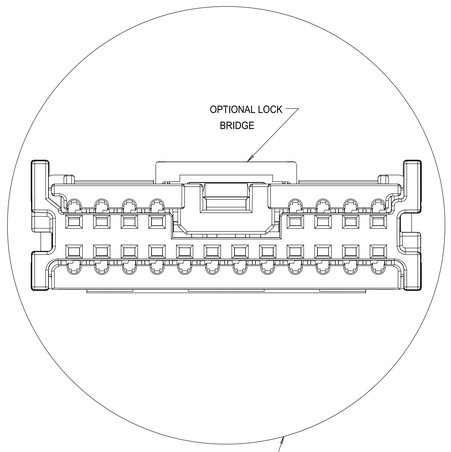

PASS THRU DIAMETER
∅31.64
1 mm ADDITIONAL CLEARANCE
ADDED TO TIGHTEST FIT CIRCLE

HINGES CLOSED
(BRIDGED/NON-BRIDGED)

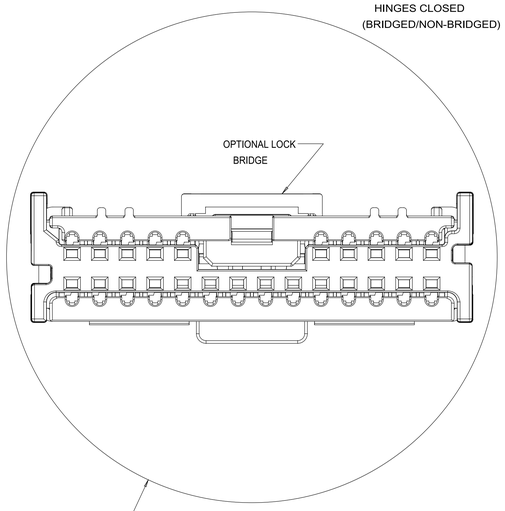

PASS THRU DIAMETER
∅35.48
1 mm ADDITIONAL CLEARANCE
ADDED TO TIGHTEST FIT CIRCLE

HINGES CLOSED

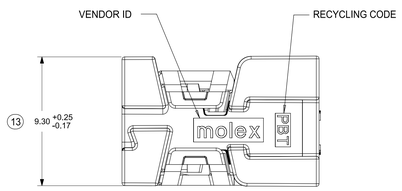

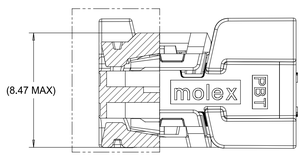

CUTAWAY SHOWING MAXIMUM
POINTS ASSEMBLE HINGES

QUALITY SYMBOLS		
FA	=	0
FC	=	0
FP	=	0
	=	0
C	=	0
	=	0
	=	0
C	=	0

THIS DRAWING CONTAINS INFORMATION THAT IS PROPRIETARY TO MOLEX ELECTRONIC TECHNOLOGIES, LLC AND SHOULD NOT BE USED WITHOUT WRITTEN PERMISSION

EC NO: 614746 2019/03/27
DRWN: SRUSS 2019/03/29
CHK'D: JDUNAJ 2019/03/29
APPR: JDUNAJ 2019/03/29

L5 REV

GENERAL TOLERANCES (UNLESS SPECIFIED)		
ANGULAR TOL ±	°	
4 PLACES	±	
3 PLACES	±	
2 PLACES	±	0.1
1 PLACE	±	0.2
0 PLACES	±	

DRAFT WHERE APPLICABLE MUST REMAIN WITHIN DIMENSIONS

DIMENSION UNITS	SCALE
MM ONLY	6:1
DRWN BY: TCUCU	DATE: 2011/03/10
CHK'D BY: TMACHUGA	DATE: 2011/03/11
APPR BY: SMARCEAU	DATE: 2012/05/21
DRAWING SIZE: E	THIRD ANGLE PROJECTION

molex®

MINI50 DUAL ROW
RECEPTACLE SALES DRAWING

PRODUCT CUSTOMER DRAWING

SERIES	MATERIAL NUMBER	CUSTOMER
34824	SEE TABLE	GENERAL MARKET

DOCUMENT NUMBER	DOC TYPE	DOC PART	SHEET NUMBER
SD-34824-002	PSD	001	3 OF 4

RELEASE STATUS	P1	RELEASE DATE	2019/03/29 20:37:18

MINI50 RECEPTACLE ASSEMBLIES

PBT RECEPTACLES

MATERIAL NUMBER	LOCK BRIDGE OPTION	CONFIGURATION	CIRCUIT	POL	COLOR	MATING COMPONENT					
						SURFACE MOUNT TECHNOLOGY (SMT) HEADER		VERTICAL THRU HOLE HEADER		RIGHT ANGLE THRU HOLE HEADER	
BULK PACKAGING PK-31301-538						TAPE AND REEL PACKAGING PK-31301-786	TUBE PACKAGING PK-31301-688	TRAY PACKAGING PK-31301-440	TUBE PACKAGING PK-31301-688	TRAY PACKAGING PK-31301-440	TUBE PACKAGING PK-31301-688
34824-0124	NO	USCAR COMPATIBLE	12	A	BLACK	34897-8120	34897-9120	34825-0124	34825-9124	34826-0124	34826-9124
34824-0125	NO	USCAR COMPATIBLE	12	B	GRAY	34897-8121	34897-9121	34825-0125	34825-9125	34826-0125	34826-9125
34824-0126	NO	USCAR COMPATIBLE	12	C	DARK GRAY	34897-8122	34897-9122	34825-0126	34825-9126	34826-0126	34826-9126
34824-1124	YES	USCAR COMPATIBLE	12	A	BLACK	34897-8120	34897-9120	34825-0124	34825-9124	34826-0124	34826-9124
34824-1125	YES	USCAR COMPATIBLE	12	B	GRAY	34897-8121	34897-9121	34825-0125	34825-9125	34826-0125	34826-9125
34824-1126	YES	USCAR COMPATIBLE	12	C	DARK GRAY	34897-8122	34897-9122	34825-0126	34825-9126	34826-0126	34826-9126
34824-0160	NO	USCAR COMPATIBLE	16	A	BLACK	34897-8160	34897-9160	34825-0160	34825-9160	34826-0160	34826-9160
34824-0161	NO	USCAR COMPATIBLE	16	B	GRAY	34897-8161	34897-9161	34825-0161	34825-9161	34826-0161	34826-9161
34824-0162	NO	USCAR COMPATIBLE	16	C	DARK GRAY	34897-8162	34897-9162	34825-0162	34825-9162	34826-0162	34826-9162
34824-1160	YES	USCAR COMPATIBLE	16	A	BLACK	34897-8160	34897-9160	34825-0160	34825-9160	34826-0160	34826-9160
34824-1161	YES	USCAR COMPATIBLE	16	B	GRAY	34897-8161	34897-9161	34825-0161	34825-9161	34826-0161	34826-9161
34824-1162	YES	USCAR COMPATIBLE	16	C	DARK GRAY	34897-8162	34897-9162	34825-0162	34825-9162	34826-0162	34826-9162
34824-0200	NO	USCAR COMPATIBLE	20	A	BLACK	34897-8200	34897-9200	34825-0200	34825-9200	34826-0200	34826-9200
34824-0201	NO	USCAR COMPATIBLE	20	B	GRAY	34897-8201	34897-9201	34825-0201	34825-9201	34826-0201	34826-9201
34824-0202	NO	USCAR COMPATIBLE	20	C	DARK GRAY	34897-8202	34897-9202	34825-0202	34825-9202	34826-0202	34826-9202
34824-1200	YES	USCAR COMPATIBLE	20	A	BLACK	34897-8200	34897-9200	34825-0200	34825-9200	34826-0200	34826-9200
34824-1201	YES	USCAR COMPATIBLE	20	B	GRAY	34897-8201	34897-9201	34825-0201	34825-9201	34826-0201	34826-9201
34824-1202	YES	USCAR COMPATIBLE	20	C	DARK GRAY	34897-8202	34897-9202	34825-0202	34825-9202	34826-0202	34826-9202
34824-0240	NO	USCAR COMPATIBLE	24	A	BLACK	34897-8240	34897-9240	34825-0240	34825-9240	34826-0240	34826-9240
34824-0241	NO	USCAR COMPATIBLE	24	B	GRAY	34897-8241	34897-9241	34825-0241	34825-9241	34826-0241	34826-9241
34824-0242	NO	USCAR COMPATIBLE	24	C	DARK GRAY	34897-8242	34897-9242	34825-0242	34825-9242	34826-0242	34826-9242
34824-1240	YES	USCAR COMPATIBLE	24	A	BLACK	34897-8240	34897-9240	34825-0240	34825-9240	34826-0240	34826-9240
34824-1241	YES	USCAR COMPATIBLE	24	B	GRAY	34897-8241	34897-9241	34825-0241	34825-9241	34826-0241	34826-9241
34824-1242	YES	USCAR COMPATIBLE	24	C	DARK GRAY	34897-8242	34897-9242	34825-0242	34825-9242	34826-0242	34826-9242

ECOPAXX RECEPTACLES

MATERIAL NUMBER	LOCK BRIDGE OPTION	CONFIGURATION	CIRCUIT	POL	COLOR	MATING COMPONENT					
						SURFACE MOUNT TECHNOLOGY (SMT) HEADER		VERTICAL THRU HOLE HEADER		RIGHT ANGLE THRU HOLE HEADER	
BULK PACKAGING PK-31301-538						TAPE AND REEL PACKAGING PK-31301-786	TUBE PACKAGING PK-31301-688	TRAY PACKAGING PK-31301-440	TUBE PACKAGING PK-31301-688	TRAY PACKAGING PK-31301-440	TUBE PACKAGING PK-31301-688
34824-0164	NO	USCAR COMPATIBLE	16	A	BLACK	34897-8160	34897-9160	34825-0160	34825-9160	34826-0160	34826-9160
34824-0165	NO	USCAR COMPATIBLE	16	B	GRAY	34897-8161	34897-9161	34825-0161	34825-9161	34826-0161	34826-9161
34824-0166	NO	USCAR COMPATIBLE	16	C	DARK GRAY	34897-8162	34897-9162	34825-0162	34825-9162	34826-0162	34826-9162
34824-1164	YES	USCAR COMPATIBLE	16	A	BLACK	34897-8160	34897-9160	34825-0160	34825-9160	34826-0160	34826-9160
34824-1165	YES	USCAR COMPATIBLE	16	B	GRAY	34897-8161	34897-9161	34825-0161	34825-9161	34826-0161	34826-9161
34824-1166	YES	USCAR COMPATIBLE	16	C	DARK GRAY	34897-8162	34897-9162	34825-0162	34825-9162	34826-0162	34826-9162
34824-0204	NO	USCAR COMPATIBLE	20	A	BLACK	34897-8200	34897-9200	34825-0200	34825-9200	34826-0200	34826-9200
34824-0205	NO	USCAR COMPATIBLE	20	B	GRAY	34897-8201	34897-9201	34825-0201	34825-9201	34826-0201	34826-9201
34824-0206	NO	USCAR COMPATIBLE	20	C	DARK GRAY	34897-8202	34897-9202	34825-0202	34825-9202	34826-0202	34826-9202
34824-1204	YES	USCAR COMPATIBLE	20	A	BLACK	34897-8200	34897-9200	34825-0200	34825-9200	34826-0200	34826-9200
34824-1205	YES	USCAR COMPATIBLE	20	B	GRAY	34897-8201	34897-9201	34825-0201	34825-9201	34826-0201	34826-9201
34824-1206	YES	USCAR COMPATIBLE	20	C	DARK GRAY	34897-8202	34897-9202	34825-0202	34825-9202	34826-0202	34826-9202
34824-0244	NO	USCAR COMPATIBLE	24	A	BLACK	34897-8240	34897-9240	34825-0240	34825-9240	34826-0240	34826-9240
34824-0245	NO	USCAR COMPATIBLE	24	B	GRAY	34897-8241	34897-9241	34825-0241	34825-9241	34826-0241	34826-9241
34824-0246	NO	USCAR COMPATIBLE	24	C	DARK GRAY	34897-8242	34897-9242	34825-0242	34825-9242	34826-0242	34826-9242
34824-1244	YES	USCAR COMPATIBLE	24	A	BLACK	34897-8240	34897-9240	34825-0240	34825-9240	34826-0240	34826-9240
34824-1245	YES	USCAR COMPATIBLE	24	B	GRAY	34897-8241	34897-9241	34825-0241	34825-9241	34826-0241	34826-9241
34824-1246	YES	USCAR COMPATIBLE	24	C	DARK GRAY	34897-8242	34897-9242	34825-0242	34825-9242	34826-0242	34826-9242

CTX50 UNSEALED RECEPTACLE TERMINALS

PART NUMBER		MATERIAL	WIRE GAGE (mm^2)	GRIP
D-WIND (LEFT PAYOFF)	B-WIND (RIGHT PAYOFF)			
560023-0448	560023-0450	COPPER ALLOY	0.35	LARGE
560023-0421	560023-0423	COPPER ALLOY	0.22	MEDIUM
560023-0422	560023-0424	COPPER ALLOY	0.13	SMALL

QUALITY SYMBOLS
FA = 0
FC = 0
FP = 0
= 0
C = 0
= 0
= 0
C = 0

THIS DRAWING CONTAINS INFORMATION THAT IS PROPRIETARY TO MOLEX ELECTRONIC TECHNOLOGIES, LLC AND SHOULD NOT BE USED WITHOUT WRITTEN PERMISSION

EC NO: 614746 2019/03/27
DRWN: SRUSS 2019/03/29
CHK'D: JDUNAJ 2019/03/29
APPR: JDUNAJ

GENERAL TOLERANCES (UNLESS SPECIFIED)
ANGULAR TOL ± °
4 PLACES ±
3 PLACES ±
2 PLACES ± 0.1
1 PLACE ± 0.2
0 PLACES ±
DRAFT WHERE APPLICABLE MUST REMAIN WITHIN DIMENSIONS

L5 REV

DIMENSION UNITS: MM ONLY
SCALE: 1:1
DRWN BY: TCUCU DATE: 2011/03/10
CHK'D BY: TMACHUGA DATE: 2011/03/11
APPR BY: SMARCEAU DATE: 2012/05/21
DRAWING SIZE: E
THIRD ANGLE PROJECTION

molex®

MINI50 DUAL ROW
RECEPTACLE SALES DRAWING

PRODUCT CUSTOMER DRAWING

SERIES	MATERIAL NUMBER	CUSTOMER
34824	SEE TABLE	GENERAL MARKET

DOCUMENT NUMBER	DOC TYPE	DOC PART	SHEET NUMBER
SD-34824-002	PSD	001	4 OF 4

RELEASE STATUS | P1 | RELEASE DATE | 2019/03/29 20:37:18

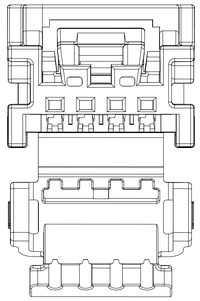

4CKT BRIDGED RECEPTACLE WITH CPA
POLARIZATION OPTION A

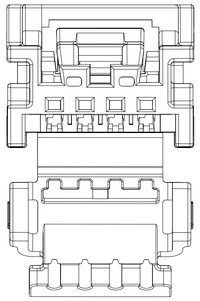

4CKT BRIDGED RECEPTACLE WITH CPA
POLARIZATION OPTION B

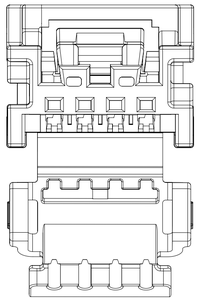

4CKT BRIDGED RECEPTACLE WITH CPA
POLARIZATION OPTION C

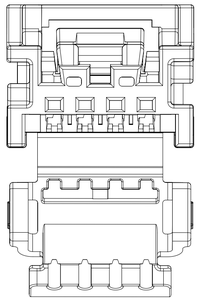

4CKT BRIDGED RECEPTACLE WITH CPA
POLARIZATION OPTION D

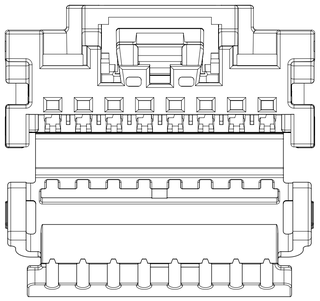

8CKT BRIDGED RECEPTACLE WITH CPA
POLARIZATION OPTION A

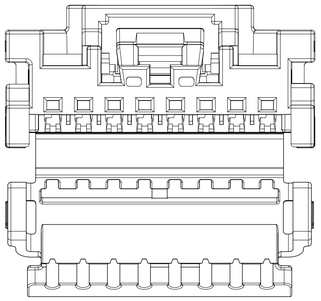

8CKT BRIDGED RECEPTACLE WITH CPA
POLARIZATION OPTION B

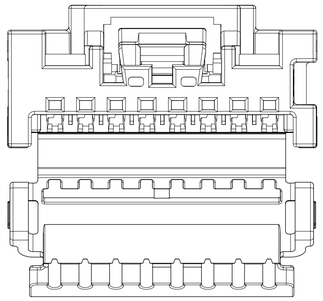

8CKT BRIDGED RECEPTACLE WITH CPA
POLARIZATION OPTION C

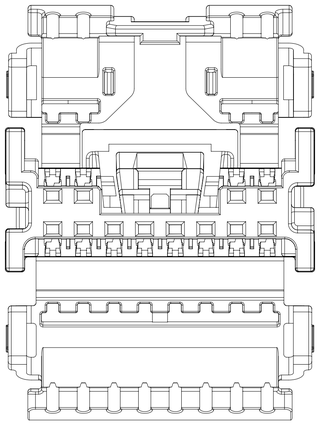

12CKT BRIDGED RECEPTACLE WITH CPA
POLARIZATION OPTION A

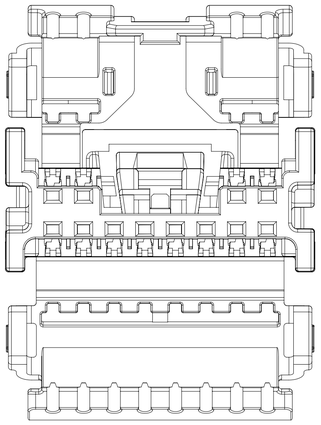

12CKT BRIDGED RECEPTACLE WITH CPA
POLARIZATION OPTION B

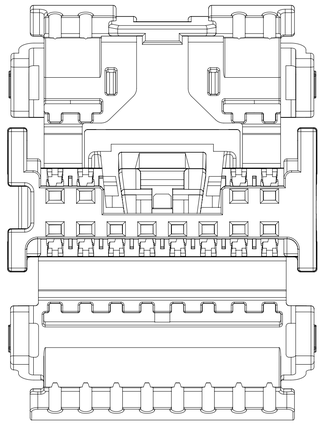

12CKT BRIDGED RECEPTACLE WITH CPA
POLARIZATION OPTION C

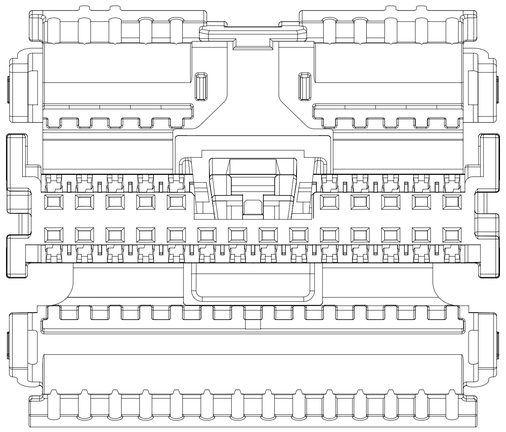

24CKT BRIDGED RECEPTACLE WITH CPA
POLARIZATION OPTION A

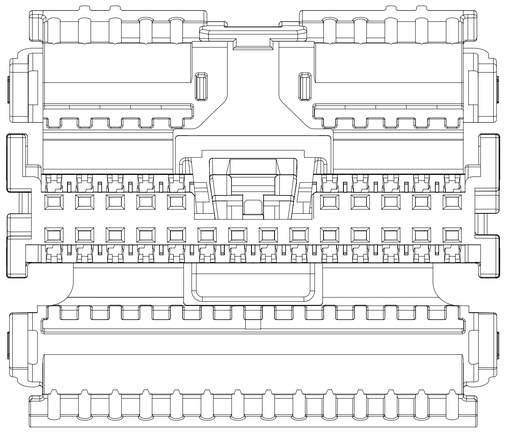

24CKT BRIDGED RECEPTACLE WITH CPA
POLARIZATION OPTION B

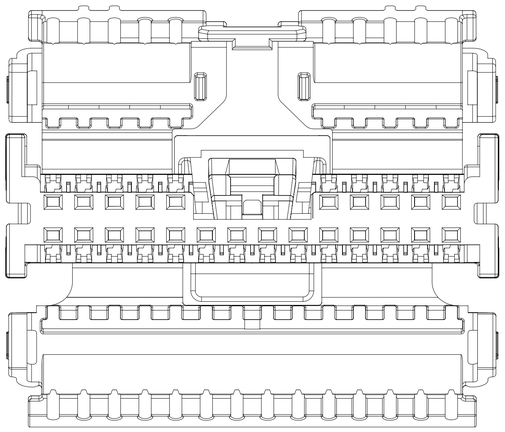

24CKT BRIDGED RECEPTACLE WITH CPA
POLARIZATION OPTION C

24CKT POLARIZATIONS ARE REPRESENTATIVE OF 16CKT AND 20CKT

NOTES: VALID UNLESS OTHERWISE SPECIFIED

1. GENERAL:
   a. APPLICATION SPECIFICATION SEE: AS-34791-020
   b. PRODUCT SPECIFICATION SEE: PS-34791-020
   c. PACKAGING SPECIFICATION PER MOLEX DRAWING: SEE CHART
   d. PARTS MUST BE IN COMPLIANCE TO MOLEX CHEMICAL SUBSTANCES FOR PRODUCTS AND PACKAGING SPECIFICATION: QEHS-699000-301
   e. DATA MUST BE SUBMITTED UNDER THE MOLEX PART NUMBER TO IMDS (COMPANY ID#13255)
   f. FLAMMABILITY REQUIREMENT: PER ISO3795 OR GM3191
      1. BURN RATE 100 mm/MIN MAXIMUM
      2. MATERIAL MUST BE SELF EXTINGUISHING
   g. VISUAL DEFECTS SHALL MEET COSMETIC STANDARD PS-45499-002 (Class B)
   f. FOR TERMINAL USAGE, REFER TO MOLEX SALES DRAWING SD-560023-002

2. DESIGN - MATERIALS:
   a. SEE BOM FOR MATERIAL INFORMATION

3. DESIGN - GEOMETRY:
   a. THIS IS A 100% CAD GENERATED PART. THE CAD MATHEMATICAL DATA IS THE MASTER FOR THIS PART. FOR DIMENSIONAL OR ANY INFORMATION NOT SHOWN ON THIS DRAWING, ANALYZE THE CAD MODEL.
   b. GEOMETRIC DIMENSIONS AND TOLERANCES PER ASME Y14.5 - 2009
   c. GENERAL TOLERANCES:
      LINEAR: PER DIN 16901 CODE B FOR PRECISION ENGINEERING (SEE TABLE)
      ANGULAR: ±3°
   d. EDGES AND UNDIMENSIONED DETAILS PER ISO13715
   e. CORNERS SHOWN AS SHARP TO BE R 0.2 MAX
   f. LETTERING SHALL BE 0.1 MAX RAISED IN 0.15 MAX RECESS PAD AND NOT PROTRUDE THE SURFACE. THIS INCLUDES RECYCLING CODE, PLANT ID, CAVITY ID, VENDOR ID, CIRCUIT ID, AND PART SERIES NUMBER.
   g. DIMENSION APPLIES ONLY TO RECEPTACLES WITH LOCK BRIDGE OPTION.

4. DESIGN - FUNCTIONALITY:
   a. HINGE DOES NOT AFFECT FUNCTION OF THE PART.

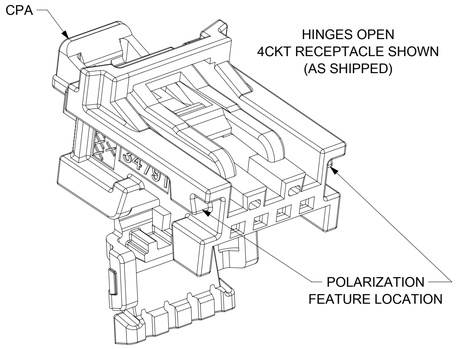

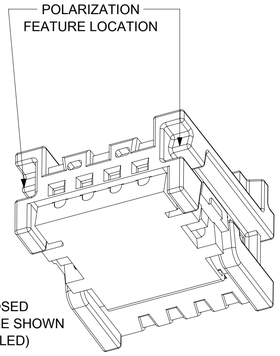

INSPECTION BALLOON LOG
PER DRAWING REVISION: M9

LAST BALLOON USED: 21

ADDED BALLOON NUMBERS:

REMOVED BALLOON NUMBERS: 22-33

REV	DESCRIPTION
M9	DRAWING REMASTERED SHEET 1: CORRECTED NOTE 2 SHEET 2-3: UPDATED VIEWS-NO GEOMETRY CHANGES SHEET 4: ADDED TAPE AND REEL P/N'S TO BOM
M8	DIMENSION ADDED ON SHEET 3
M6	ADDED DATUMS AND DATUM NOTE
M5	REMASTERING DRAWING
M2	UPDATED 24 CKT

THIS DRAWING CONTAINS INFORMATION THAT IS PROPRIETARY TO MOLEX ELECTRONIC TECHNOLOGIES, LLC AND SHOULD NOT BE USED WITHOUT WRITTEN PERMISSION

DIMENSION UNITS	SCALE
mm	5:1

GENERAL TOLERANCES (UNLESS SPECIFIED)

ANGULAR TOL	±	1.0 °
4 PLACES	±	
3 PLACES	±	
2 PLACES	±	0.1
1 PLACE	±	0.2
0 PLACES	±	

DRAFT WHERE APPLICABLE MUST REMAIN WITHIN DIMENSIONS

CURRENT REV DESC:

EC NO: 635574
DRWN: KHEWITT 2020/03/27
CHK'D: KHEWITT 2020/04/09
APPR: JDUNAJ 2020/04/10

INITIAL REVISION:
DRWN: TMACHUGA 2013/10/15
APPR: RBAUMAN 2013/11/13

THIRD ANGLE PROJECTION | DRAWING: A1-SIZE | SERIES: 34824

molex

MINI50 RECEPTACLE WITH CPA SALES DRAWING

PRODUCT CUSTOMER DRAWING

DOCUMENT NUMBER	DOC TYPE	DOC PART	REVISION
SD-34824-003	PSD	001	M9

MATERIAL NUMBER | CUSTOMER: GENERAL MARKET | SHEET NUMBER: 1 OF 4

DOCUMENT STATUS	P1	RELEASE DATE	2020/04/10 12:40:17

COPYRIGHT: creator-ltr-prod-A1
REVISION: J
DATE: 2020/01/14

4CKT BRIDGE OPTION WITH CPA IN PRE-LOCK

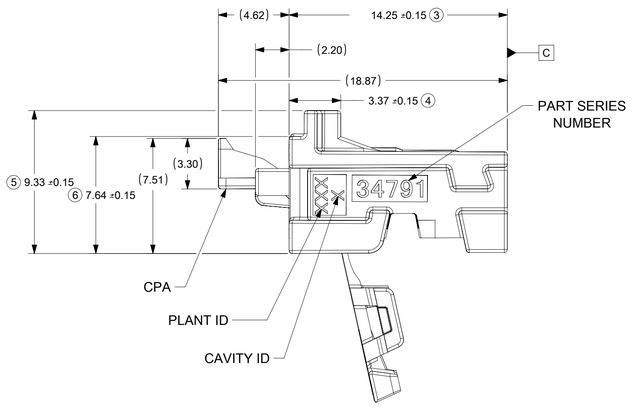

4CKT USCAR COMPATIBLE RECEPTACLE WITH CPA

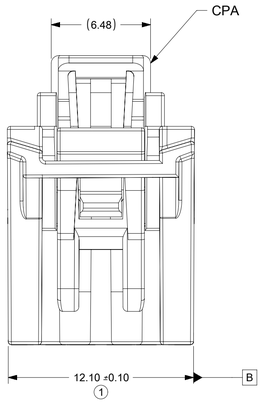

8CKT USCAR COMPATIBLE RECEPTACLE WITH CPA

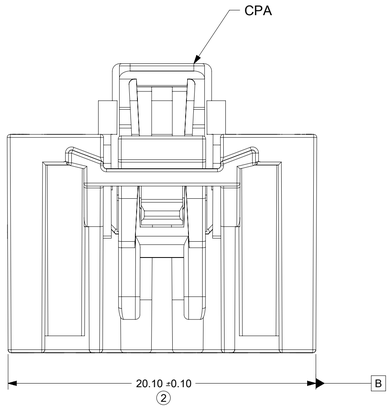

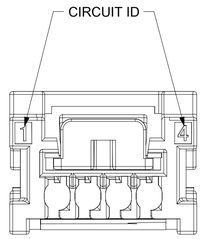

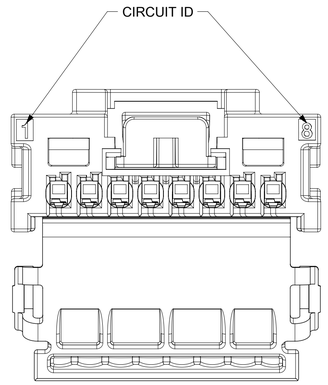

8CKT BRIDGE OPTION WITH CPA IN PRE-LOCK

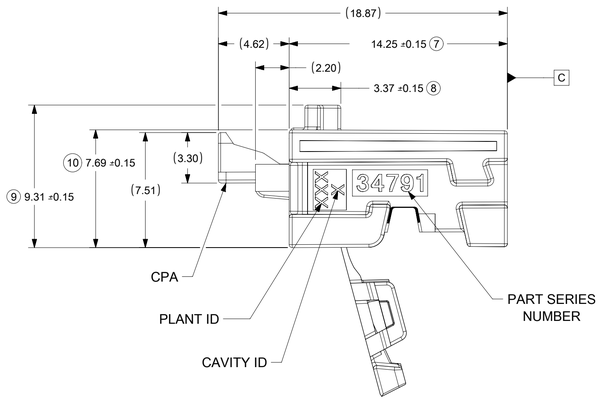

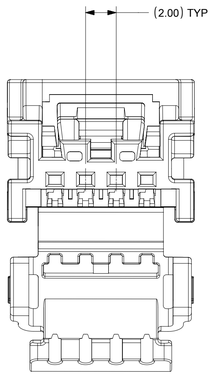

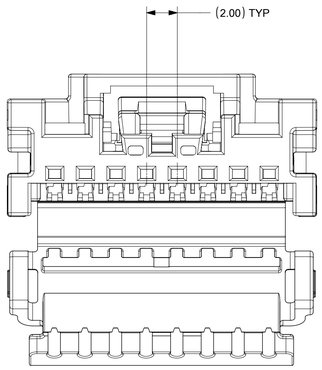

4CKT HINGE CLOSED

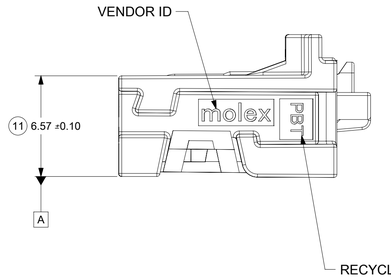

8CKT HINGE CLOSED

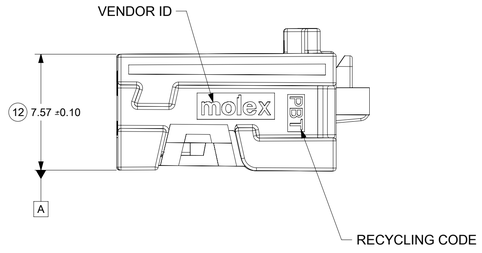

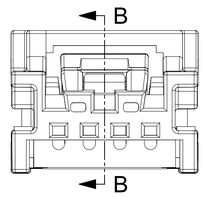

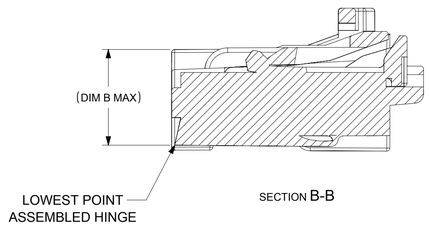

4CKT HINGE CLOSED

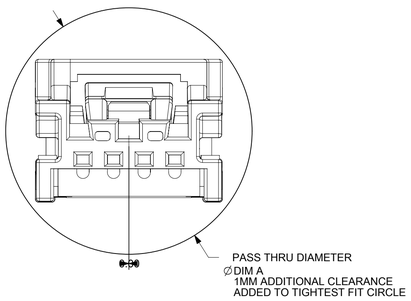

CHARTED DIMENSIONS		
DESCRIPTION	DIMENSION	
	A	B
4 CKT	16.09	6.77
8 CKT	22.52	7.77
12 CKT	23.18	8.47
16 CKT	26.87	8.47
20 CKT	30.65	8.47
24 CKT	34.47	8.47

THIS DRAWING CONTAINS INFORMATION THAT IS PROPRIETARY TO MOLEX ELECTRONIC TECHNOLOGIES, LLC AND SHOULD NOT BE USED WITHOUT WRITTEN PERMISSION

DIMENSION UNITS	SCALE
mm	5:1

GENERAL TOLERANCES (UNLESS SPECIFIED)

ANGULAR TOL	±	1.0 °
4 PLACES	±	
3 PLACES	±	
2 PLACES	±	0.1
1 PLACE	±	0.2
0 PLACES	±	

DRAFT WHERE APPLICABLE MUST REMAIN WITHIN DIMENSIONS

CURRENT REV DESC:

EC NO: 635574
DRWN: KHEWITT 2020/03/27
CHK'D: KHEWITT 2020/04/09
APPR: JDUNAJ 2020/04/10

INITIAL REVISION:
DRWN: TMACHUGA 2013/10/15
APPR: RBAUMAN 2013/11/13

THIRD ANGLE PROJECTION | DRAWING: A1-SIZE | SERIES: 34824

molex

MINI50 RECEPTACLE WITH CPA SALES DRAWING

PRODUCT CUSTOMER DRAWING

DOCUMENT NUMBER	DOC TYPE	DOC PART	REVISION
SD-34824-003	PSD	001	M9

MATERIAL NUMBER | CUSTOMER: GENERAL MARKET | SHEET NUMBER: 2 OF 4

DOCUMENT STATUS	P1	RELEASE DATE	2020/04/10 12:40:17

DUAL ROW LOCK BRIDGE OPTION

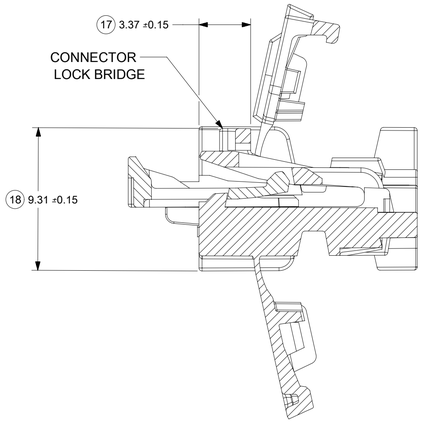

12CKT USCAR COMPATIBLE RECEPTACLE WITH CPA

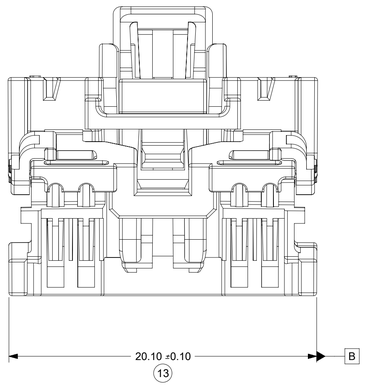

16CKT USCAR COMPATIBLE RECEPTACLE WITH CPA

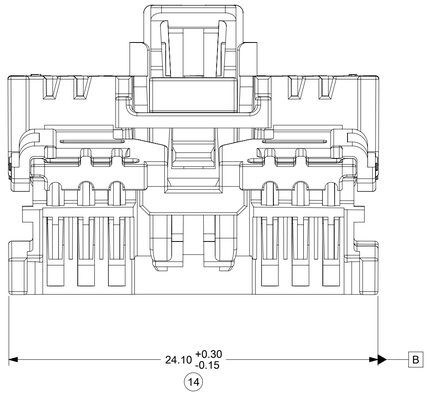

20CKT USCAR COMPATIBLE RECEPTACLE WITH CPA

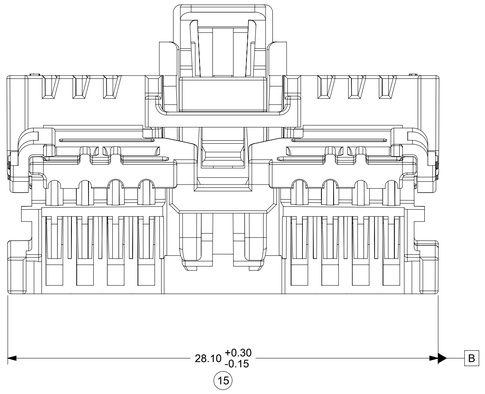

24CKT USCAR COMPATIBLE RECEPTACLE WITH CPA

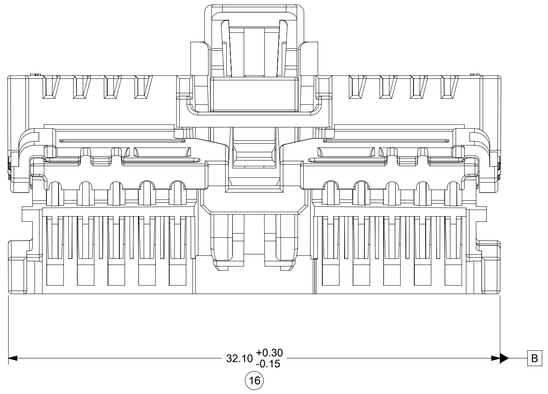

SECTION C-C

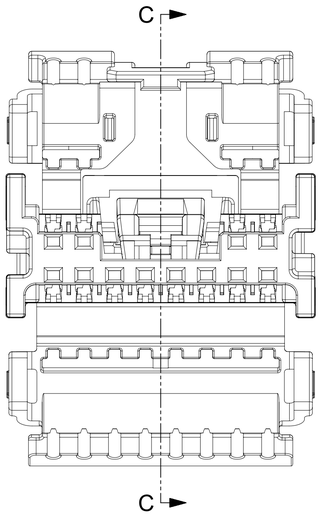

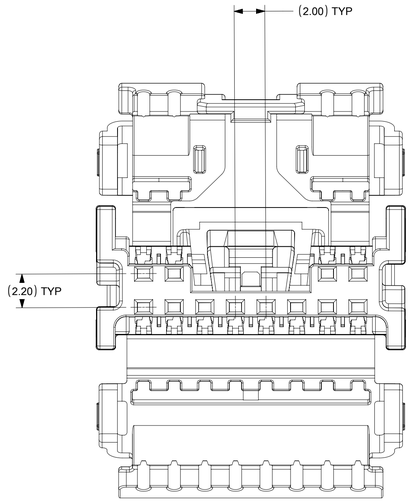

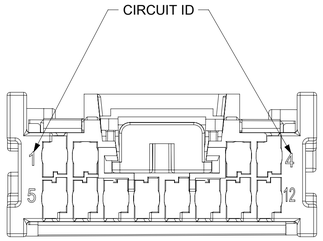

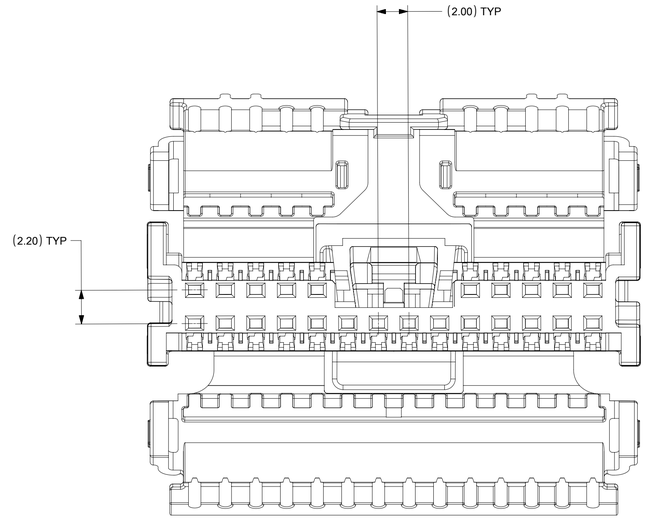

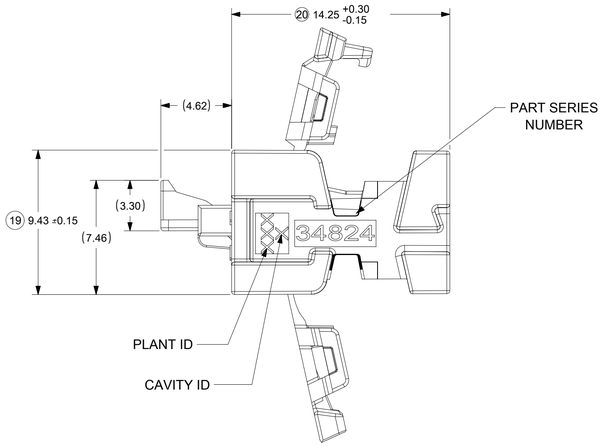

*NOTE: DIM 20 TOLERANCE IS +0.20/-0.15
FOR P/N 34824-2244/5/6

HINGES CLOSED

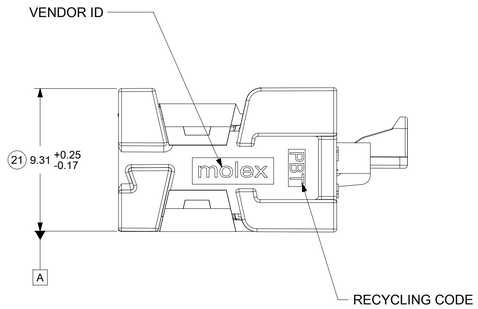

*NOTE: DATUMS A AND C ARE SIMILAR FOR 12-24CKT CONNECTORS

THIS DRAWING CONTAINS INFORMATION THAT IS PROPRIETARY TO MOLEX ELECTRONIC TECHNOLOGIES, LLC AND SHOULD NOT BE USED WITHOUT WRITTEN PERMISSION

DIMENSION UNITS	SCALE
mm	5:1

GENERAL TOLERANCES (UNLESS SPECIFIED)

ANGULAR TOL	±	1.0 °
4 PLACES	±	
3 PLACES	±	
2 PLACES	±	0.1
1 PLACE	±	0.2
0 PLACES	±	

DRAFT WHERE APPLICABLE MUST REMAIN WITHIN DIMENSIONS

CURRENT REV DESC:

EC NO: 635574
DRWN: KHEWITT 2020/03/27
CHK'D: KHEWITT 2020/04/09
APPR: JDUNAJ 2020/04/10

INITIAL REVISION:
DRWN: TMACHUGA 2013/10/15
APPR: RBAUMAN 2013/11/13

molex

MINI50 RECEPTACLE WITH CPA SALES DRAWING

PRODUCT CUSTOMER DRAWING

DOCUMENT NUMBER	DOC TYPE	DOC PART	REVISION
SD-34824-003	PSD	001	M9

THIRD ANGLE PROJECTION	DRAWING	SERIES	MATERIAL NUMBER	CUSTOMER	SHEET NUMBER
	A1-SIZE	34824		GENERAL MARKET	3 OF 4

DOCUMENT STATUS	P1	RELEASE DATE	2020/04/10 12:40:17

FORMAT: master-tb-prod-A1
REVISION: J
DATE: 2020/01/14

SINGLE ROW ASSEMBLY
(RECEPTACLE WITH CPA)

MOLEX MATERIAL NUMBER BULK PACKAGING PK-31301-538	GENERAL MOTORS PART NUMBER	CONFIGURATION	MATERIAL TYPE	CIRCUIT	POL	COLOR	MATING COMPONENT							
							SURFACE MOUNT TECHNOLOGY (SMT) HEADER		VERTICAL THRU HOLE HEADER			RIGHT ANGLE THRU HOLE HEADER		
							TAPE AND REEL PACKAGING PK-31301-786	TUBE PACKAGING PK-31301-688	TRAY PACKAGING PK-31301-440	TUBE PACKAGING PK-31301-688	TAPE AND REEL PACKAGING PK-47799-0001	TRAY PACKAGING PK-31301-440	TUBE PACKAGING PK-31301-688	TAPE AND REEL PACKAGING PK-47799-0001
34791-5140	13507113	USCAR	PBT	4	A	BLACK	34912-8040	34912-9040	34792-0040	34792-9040	34792-8040	34793-0040	34793-9040	34793-8040
34791-5141	13507115	USCAR		4	B	LIGHT GRAY	34912-8041	34912-9041	34792-0041	34792-9041	34792-8041	34793-0041	34793-9041	34793-8041
34791-5142	13507116	USCAR		4	C	DARK GRAY	34912-8042	34912-9042	34792-0042	34792-9042	34792-8042	34793-0042	34793-9042	34793-8042
34791-5143	13507117	USCAR		4	D	GREEN	34912-8043	34912-9043	34792-0043	34792-9043	34792-8043	34793-0043	34793-9043	34793-8043
34791-5180	13507118	USCAR		8	A	BLACK	34912-8080	34912-9080	34792-0080	34792-9080	34792-8080	34793-0080	34793-9080	34793-8080
34791-5181	13507119	USCAR		8	B	LIGHT GRAY	34912-8081	34912-9081	34792-0081	34792-9081	34792-8081	34793-0081	34793-9081	34793-8081
34791-5182	13507120	USCAR		8	C	DARK GRAY	34912-8082	34912-9082	34792-0082	34792-9082	34792-8082	34793-0082	34793-9082	34793-8082

DUAL ROW ASSEMBLY
(RECEPTACLE WITH CPA)

MOLEX MATERIAL NUMBER BULK PACKAGING PK-31301-538	GENERAL MOTORS PART NUMBER	CONFIGURATION	MATERIAL TYPE	CIRCUIT	POL	COLOR	MATING COMPONENT							
							SURFACE MOUNT TECHNOLOGY (SMT) HEADER		VERTICAL THRU HOLE HEADER			RIGHT ANGLE THRU HOLE HEADER		
							TAPE AND REEL PACKAGING PK-31301-786	TUBE PACKAGING PK-31301-688	TRAY PACKAGING PK-31301-440	TUBE PACKAGING PK-31301-688	TAPE AND REEL PACKAGING PK-47799-0001	TRAY PACKAGING PK-31301-440	TUBE PACKAGING PK-31301-688	TAPE AND REEL PACKAGING PK-47799-0001
34824-2164	N/A	USCAR	ECOPAXX	16	A	BLACK	34897-8160	34897-9160	34825-0160	34825-9160	34825-8160	34826-0160	34826-9160	34826-8160
34824-2165	N/A	USCAR		16	B	LIGHT GRAY	34897-8161	34897-9161	34825-0161	34825-9161	34825-8161	34826-0161	34826-9161	34826-8161
34824-2166	N/A	USCAR		16	C	DARK GRAY	34897-8162	34897-9162	34825-0162	34825-9162	34825-8162	34826-0162	34826-9162	34826-8162
34824-2204	13596105	USCAR		20	A	BLACK	34897-8200	34897-9200	34825-0200	34825-9200	34825-8200	34826-0200	34826-9200	34826-8200
34824-2205	13596106	USCAR		20	B	LIGHT GRAY	34897-8201	34897-9201	34825-0201	34825-9201	34825-8201	34826-0201	34826-9201	34826-8201
34824-2206	13596107	USCAR		20	C	DARK GRAY	34897-8202	34897-9202	34825-0202	34825-9202	34825-8202	34826-0202	34826-9202	34826-8202
34824-2244	N/A	USCAR		24	A	BLACK	34897-8240	34897-9240	34825-0240	34825-9240	34825-8240	34826-0240	34826-9240	34826-8240
34824-2245	N/A	USCAR		24	B	LIGHT GRAY	34897-8241	34897-9241	34825-0241	34825-9241	34825-8241	34826-0241	34826-9241	34826-8241
34824-2246	N/A	USCAR		24	C	DARK GRAY	34897-8242	34897-9242	34825-0242	34825-9242	34825-8242	34826-0242	34826-9242	34826-8242
34824-5124	13507121	USCAR	PBT	12	A	BLACK	34897-8120	34897-9120	34825-0124	34825-9124	34825-8124	34826-0124	34826-9124	34826-8124
34824-5125	13507122	USCAR		12	B	LIGHT GRAY	34897-8121	34897-9121	34825-0125	34825-9125	34825-8125	34826-0125	34826-9125	34826-8125
34824-5126	13507114	USCAR		12	C	DARK GRAY	34897-8122	34897-9122	34825-0126	34825-9126	34825-8126	34826-0126	34826-9126	34826-8126
34824-2160	N/A	USCAR		16	A	BLACK	34897-8160	34897-9160	34825-0160	34825-9160	34825-8160	34826-0160	34826-9160	34826-8160
34824-2161	N/A	USCAR		16	B	LIGHT GRAY	34897-8161	34897-9161	34825-0161	34825-9161	34825-8161	34826-0161	34826-9161	34826-8161
34824-2162	N/A	USCAR		16	C	DARK GRAY	34897-8162	34897-9162	34825-0162	34825-9162	34825-8162	34826-0162	34826-9162	34826-8162
34824-2200	13596105	USCAR		20	A	BLACK	34897-8200	34897-9200	34825-0200	34825-9200	34825-8200	34826-0200	34826-9200	34826-8200
34824-2201	13596106	USCAR		20	B	LIGHT GRAY	34897-8201	34897-9201	34825-0201	34825-9201	34825-8201	34826-0201	34826-9201	34826-8201
34824-2202	13596107	USCAR		20	C	DARK GRAY	34897-8202	34897-9202	34825-0202	34825-9202	34825-8202	34826-0202	34826-9202	34826-8202
34824-2240	N/A	USCAR		24	A	BLACK	34897-8240	34897-9240	34825-0240	34825-9240	34825-8240	34826-0240	34826-9240	34826-8240
34824-2241	N/A	USCAR		24	B	LIGHT GRAY	34897-8241	34897-9241	34825-0241	34825-9241	34825-8241	34826-0241	34826-9241	34826-8241
34824-2242	N/A	USCAR		24	C	DARK GRAY	34897-8242	34897-9242	34825-0242	34825-9242	34825-8242	34826-0242	34826-9242	34826-8242

*NOTE: CONFIGURATION CONSISTS OF AN EXPANSION OF THE 12CKT USCAR-COMPATIBLE CONFIGURATION TO ALLOW FOR 16, 20, AND 24 CIRCUITS

MINI50 CPA (APPLIED TO SINGLE AND DUAL ROW BRIDGED RECEPTACLE CONNECTORS)

MATERIAL NUMBER	COLOR	MATING COMPONENT
34824-7000	NATURAL	SEE CHARTS ABOVE

CTX50 UNSEALED RECEPTACLE TERMINALS

PART NUMBER		MATERIAL	WIRE GAGE (mm^2)	GRIP
D-WIND (LEFT PAYOFF)	B-WIND (RIGHT PAYOFF)			
560023-0448	560023-0450	COPPER ALLOY	0.35	LARGE
560023-0421	560023-0423	COPPER ALLOY	0.22	MEDIUM
560023-0422	560023-0424	COPPER ALLOY	0.13	SMALL

THIS DRAWING CONTAINS INFORMATION THAT IS PROPRIETARY TO MOLEX ELECTRONIC TECHNOLOGIES, LLC AND SHOULD NOT BE USED WITHOUT WRITTEN PERMISSION

DIMENSION UNITS	SCALE
mm	1:1

GENERAL TOLERANCES (UNLESS SPECIFIED)

ANGULAR TOL	±	1.0 °
4 PLACES	±	
3 PLACES	±	
2 PLACES	±	0.1
1 PLACE	±	0.2
0 PLACES	±	

DRAFT WHERE APPLICABLE MUST REMAIN WITHIN DIMENSIONS

CURRENT REV DESC:

EC NO: 635574
DRWN: KHEWITT 2020/03/27
CHK'D: KHEWITT 2020/04/09
APPR: JDUNAJ 2020/04/10

INITIAL REVISION:
DRWN: TMACHUGA 2013/10/15
APPR: RBAUMAN 2013/11/13

THIRD ANGLE PROJECTION | DRAWING: A1-SIZE | SERIES: 34824

molex

MINI50 RECEPTACLE WITH CPA SALES DRAWING

PRODUCT CUSTOMER DRAWING

DOCUMENT NUMBER	DOC TYPE	DOC PART	REVISION
SD-34824-003	PSD	001	M9

MATERIAL NUMBER	CUSTOMER	SHEET NUMBER
	GENERAL MARKET	4 OF 4

DOCUMENT STATUS	P1	RELEASE DATE	2020/04/10 12:40:17