molex
one company > a world of innovation

This document was generated on 11/04/2009

PLEASE CHECK WWW.MOLEX.COM FOR LATEST PART INFORMATION

Part Number: 0780350001

Status: Active

Description: 0.60mm (.024") Pitch miniDIMM DDR2 Socket, Surface Mount, 22.5° Reverse Angle, 0.76µm (30µ") Gold (Au) Plating, Off-White Latches, with Pick-and-Place Cap, 244 Circuits, 1.8V Voltage Key, Lead-free

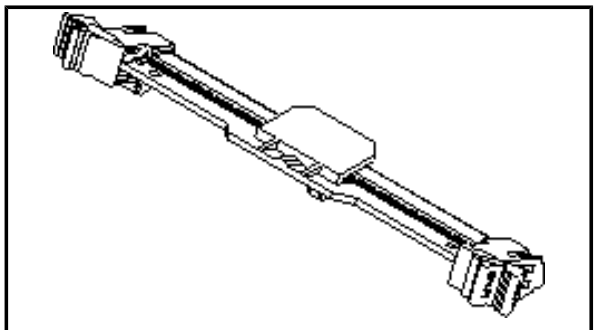

Series image - Reference only

Documents:

3D Model
Drawing (PDF)
Product Specification PS-78035-001 (PDF)
RoHS Certificate of Compliance (PDF)

General	
Product Family	Memory Module Sockets
Series	78035
Comments	<LI>Latches in Off-White Color
Component Type	Socket
JEDEC Outline	MO-244
Product Name	MiniDIMM
Physical	
Circuits (Loaded)	244
Color - Resin	Black
Color - Resin	Natural (White)
Durability (mating cycles max)	25
Entry Angle	22.5° Angle
Flammability	94V-0
Keying to Mating Part	Yes
Material - Metal	Copper Alloy
Material - Plating Mating	Gold
Material - Plating Termination	Tin
Material - Resin	High Temperature Thermoplastic
PCB Locator	Yes
PCB Retention	Yes
Packaging Type	Tray
Pitch - Mating Interface (in)	0.024 In
Pitch - Mating Interface (mm)	0.60 mm
Plating min: Mating (µin)	30
Plating min: Mating (µm)	0.76
Plating min: Termination (µin)	100
Plating min: Termination (µm)	2.54
Temperature Range - Operating	-10°C to +85°C
Termination Interface: Style	Surface Mount
Electrical	
CSA	LR 19980
Current - Maximum	1A
UL	E29179
Voltage - Maximum	30V
Voltage Key	1.8V
Solder Process Data	
Duration at Max. Process Temperature (seconds)	5
Lead-free Process Capability	Reflow Capable (SMT only)
Max. Cycles at Max. Process Temperature	1
Process Temperature max. C	260
Material Info	
Reference - Drawing Numbers	

EU RoHS
ELV and RoHS Compliant
REACH SVHC
Contains SVHC: No
Halogen-Free Status
Not Halogen-Free

China RoHS

Need more information on product environmental compliance?

Email productcompliance@molex.com
Please visit the Contact Us section for any non-product compliance questions.

Search Parts in this Series
78035 Series

Mates With
JEDEC MO-244 Modules

Product Specification	PS-78035-001
Sales Drawing	SD-78035-001

This document was generated on 11/04/2009

PLEASE CHECK WWW.MOLEX.COM FOR LATEST PART INFORMATION