Part Number : 511171605
Product Description : 4.00mm Wire-to-Wire Terminal Position Assurance (TPA) Retainer, 16 Circuits
Series Number : 51117
Status : Active
Product Category : Connector Accessories

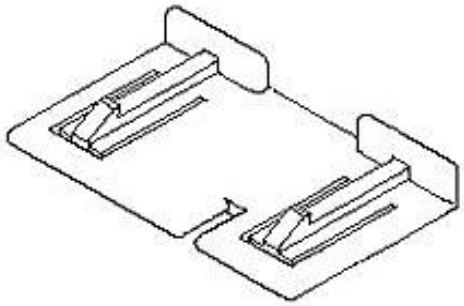

Documents and Resources

Drawings

511171605_sd.pdf

SPK-51117-001-001.pdf

Specifications

AS-51115-001-007.pdf

PS-51115-001-001.pdf

PS-68503-001-001.pdf

Product Environment Compliance

Compliance

GADSL/IMDS	Compliant
China RoHS	per SJ/T 11365-2006
EU ELV	Compliant per 2000/53/EC
Low-Halogen Status	Not Low-Halogen per IEC 61249-2-21
REACH SVHC	Not Contained per D(2025)7771-DC (04 Feb 2026)
EU RoHS	Compliant per EU 2015/863

Compliance Statements

- EU RoHS
- REACH SVHC
- Low-Halogen

Industry Documents

- IPC 1752A Class C

- IPC 1752A Class D
- Molex Product Compliance Declaration
- IEC-62474
- chemSHERPA (xml)

Substances of Interest
- PFAS

EU RoHS Certificate of Compliance

Additional Product Compliance Information

Part Details

General

Status	Active
Category	Connector Accessories
Series	51117
Description	4.00mm Wire-to-Wire Terminal Position Assurance (TPA) Retainer, 16 Circuits
Component Type	Terminal Position Assurance (TPA)
Product Name	N/A
UPC	800754367738

Physical

Circuits (Loaded)	16
Circuits (maximum)	16
Color - Resin	Gray
Material - Resin	Polyester
Net Weight	933.000/mg
Packaging Type	Bag

Solder Process Data

Lead-Free Process Capability	N/A
