This document was generated on 11/30/2017

PLEASE CHECK WWW.MOLEX.COM FOR LATEST PART INFORMATION

Part Number: 0355060510
Status: Active
Description: 2.79mm MP-Lock Tab Housing, Female, 5 Circuits

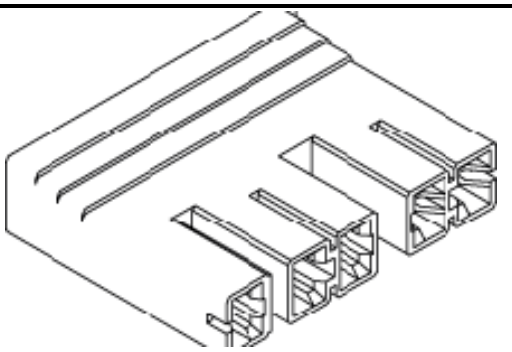

Series image - Reference only

Documents:

3D Model
Drawing (PDF)
Product Specification PS-35506-001 (PDF)
Packaging Specification PK-35506-001-001 (PDF)
RoHS Certificate of Compliance (PDF)

General

Product Family	Crimp Housings
Series	35506
Application	Power
Product Name	MP-Lock
UPC	756054283721

Physical

Circuits (maximum)	5
Gender	Receptacle
Glow-Wire Compliant	No
Net Weight	2.693/g
Number of Rows	1
Packaging Type	Bag
Panel Mount	No
Pitch - Mating Interface	4.80mm, 6.00mm, 6.50mm
Pitch - Termination Interface	4.80mm, 6.00mm, 6.50mm
Stackable	No
Temperature Range - Operating	-40°C to +105°C

Material Info

Reference - Drawing Numbers

Packaging Specification	PK-35506-001-001
Product Specification	PS-35506-001
Sales Drawing	SD-35506-001, SD-35546-003

EU ELV
Not Relevant

EU RoHS | **China RoHS**
Compliant

REACH SVHC
Not Contained Per - ED/30/2017 (7 July 2017)

Halogen-Free Status
Not Low-Halogen

Need more information on product environmental compliance?

Email productcompliance@molex.com
Please visit the Contact Us section for any non-product compliance questions.

China ROHS	Green Image
ELV	Not Relevant
RoHS Phthalates	Not Contained

Search Parts in this Series
35506 Series

Mates With
2.79mm Tab

Use With
35097-9*12

This document was generated on 11/30/2017

PLEASE CHECK WWW.MOLEX.COM FOR LATEST PART INFORMATION