This document was generated on 09/12/2018

PLEASE CHECK WWW.MOLEX.COM FOR LATEST PART INFORMATION

Part Number: 0734151040
Status: Active
Overview: MCX RF Connectors
Description: 50 Ohms, MCX PCB Bulkhead Jack Receptacle

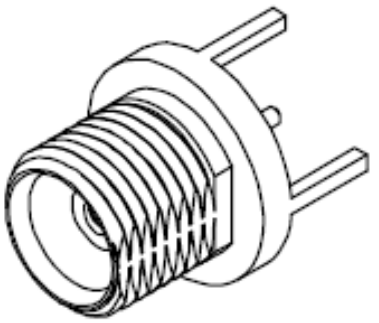

Series image - Reference only

Documents:
Drawing (PDF)
RoHS Certificate of Compliance (PDF)

General

Product Family	RF/Coax Connectors
Series	73415
Comments	PCB Mount
Overview	MCX RF Connectors
Product Name	MCX
Style	PCB
Type	Microminiature
UPC	822348110636
Wire/Cable Type	N/A

Physical

Gender	Jack
Keying to Mating Part	None
Net Weight	0.697/g
Orientation	Straight
PCB Mounting	Through Hole
PCB Thickness - Recommended	2.40mm
Packaging Type	Tray
Panel Mount	Yes
Panel Mount Method	Bulkhead
Reverse Polar	No

Electrical

Frequency	6 GHz
Impedance	50Ω

Material Info

Reference - Drawing Numbers

Sales Drawing	SD-73415-104

EU ELV
Not Relevant

EU RoHS
Compliant with Exemption 6(c)

China RoHS

REACH SVHC
Contained Per - ED/61/2018 (27 June 2018)
Lead

Halogen-Free Status
Low-Halogen

Need more information on product environmental compliance?

Email productcompliance@molex.com
Please visit the Contact Us section for any non-product compliance questions.

China ROHS	Not Relevant
ELV	Not Relevant
Prop65	Duty-To-Declare
PropRisk	Cancer
PropRisk	Developmental toxicity
PropRisk	Reproductive toxicity
PropSub	Lead and its compounds
RoHS Phthalates	Not Contained

Search Parts in this Series
73415 Series

This document was generated on 09/12/2018

PLEASE CHECK WWW.MOLEX.COM FOR LATEST PART INFORMATION