MATERIAL NO.	ENG. NUMBER	NUMBER OF CIRCUITS "XX"	DIM. "A" in	DIM. "A" mm	DIM. "B" in	DIM. "B" mm	HINGED COVER COLOR	HINGED COVER MATERIAL
387291658	72803-C-H	03	1.21	30.7	.750	19.05	BLACK	PBT (UL94V-0)
387291659	72803-C-H-SP1	03	1.21	30.7	.750	19.05	CLEAR	LEXAN (UL 94V-0)
387291452	72804-C-H	04	1.58	40.1	1.125	28.58	BLACK	PBT (UL94V-0)

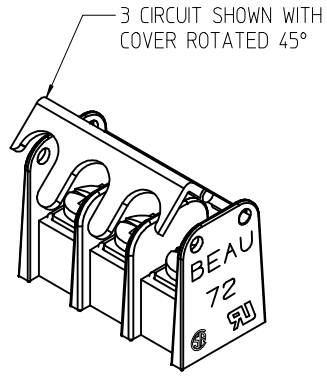

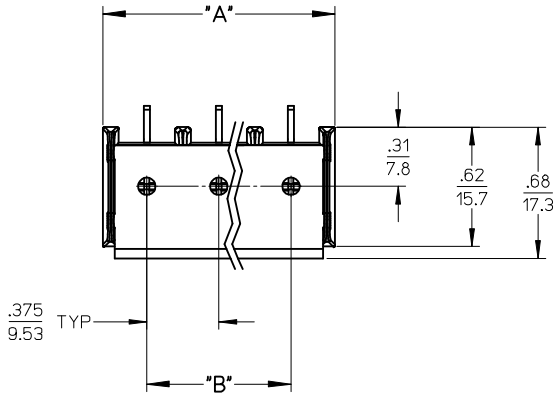

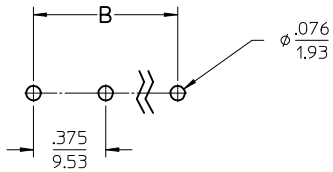

PTH PATTERN

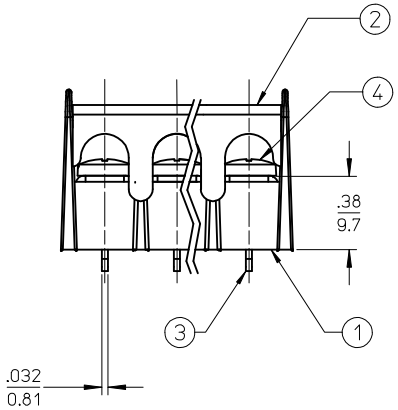

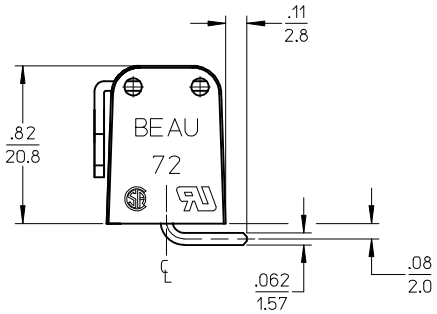

NOTES:

1. MATERIAL: SEE TABLE
2. FINISH: SEE TABLE
3. ELECTRICAL SPECS:
   MAX VOLTAGE: 300V
   MAX CURRENT: 15A
4. WIRE RANGE: 22 TO 14 AWG
5. SCREW TIGHTENING TORQUE: 12 IN LBS. (MAX)
6. WIRE STRIP LENGTH: .31 (7.9mm)
7. OPERATING TEMP: -40°C TO +100°C
8. PRODUCT SPEC: PS-38710-001
9. PART IS RoHS COMPLIANT
10. XX EQUALS NUMBER OF CIRCUITS

REF. THIS DRAWING SUPERSEDES ME10 DOC SD-38729-008 REV-C

ITEM	QTY.	DESCRIPTION	MATERIAL	FINISH
4	XX	SCREW, #6-32X.250, BHD, PH/SL (STD.)	STEEL	ZINC, CLEAR CHROMATE
3	XX	TERM WIRE WRAP 6C SN-KT	BRASS	TIN PLATE (SEMI-BRIGHT) .00015/.00025 TIN OVER .00005/.00015 COPPER Ⓑ
2	1	COVER, HINGE (UL 94V-0)	SEE CHART	SEE CHART
1	1	INSULATOR, SR, PC, CH	POLYESTER (PBT)	BLACK

WAS SEE PROD SPEC.
EC NO: IPG2015-1572 2015/03/05
DRWN:RSTONE 2015/03/06
CH'KD:B ARDEN 2015/04/20
APPR: JFMURPHY
DESCRIPTION
REV B

QUALITY SYMBOLS
▼=0
▽(C)=0

GENERAL TOLERANCES (UNLESS SPECIFIED)	mm	INCH
4 PLACES	± ---	± ---
3 PLACES	± ---	± .005
2 PLACES	± 0.13	± .01
1 PLACE	± 0.3	± ---
0 PLACE	± ---	± ---
ANGULAR ± 2 °		

DRAFT WHERE APPLICABLE MUST REMAIN WITHIN DIMENSIONS

DIMENSION STYLE: IN/MM
SCALE
DESIGN UNITS: INCH
THIRD ANGLE PROJECTION

DRAWN BY	RSTONE	DATE 2015/01/21
CHECKED BY	B RUPERT	DATE 2015/01/26
APPROVED BY	JFMURPHY	DATE 2015/02/25

TITLE: SR BTS .375 PITCH PC, RA WITH CLEAR HINGED COVER

molex

MATERIAL NO.: SEE CHART
DOCUMENT NO.: SD-38729-077
SHEET NO.: 1 OF 1
SIZE: C

THIS DRAWING CONTAINS INFORMATION THAT IS PROPRIETARY TO MOLEX INCORPORATED AND SHOULD NOT BE USED WITHOUT WRITTEN PERMISSION