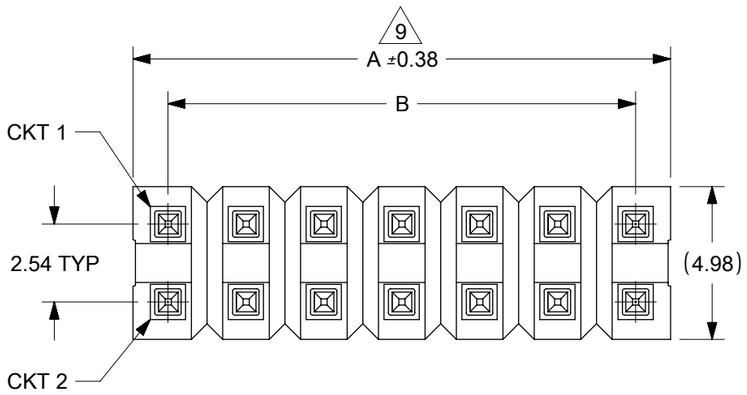

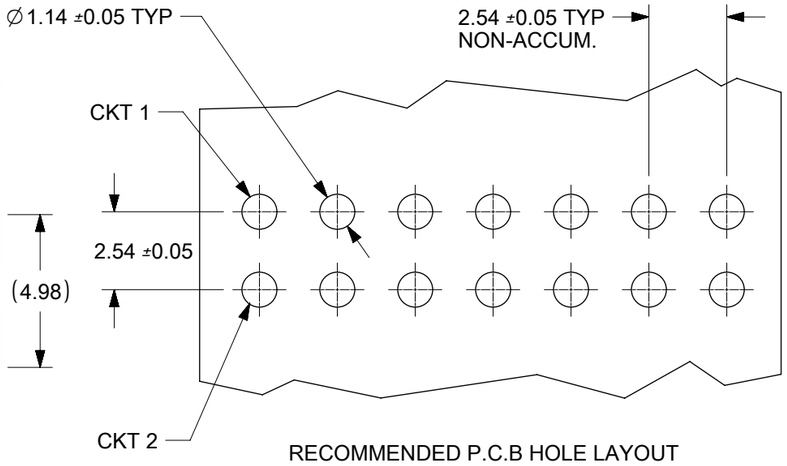

RECOMMENDED P.C.B HOLE LAYOUT

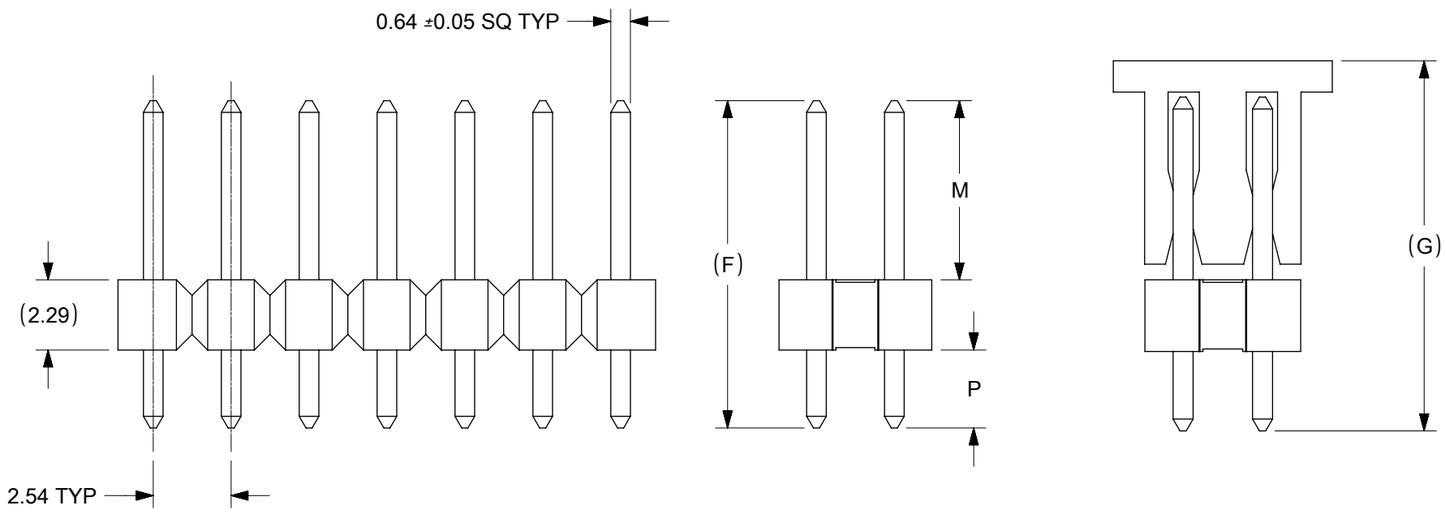

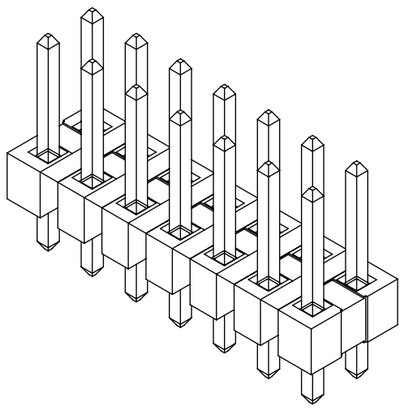

NOTES:
1. MATERIAL:
   HSG: LCP, GLASS-FILLED, UL94V-0,
   COLOR: BLACK
   PIN: 0.64MM SQ PIN, COPPER ALLOY
2. PLATING TYPE:
   (1) : 0.0254 µm GOLD FLASH OVER
   1.25 µm MIN. NICKEL OVERALL.
   (2) : 0.025 µm MIN. GOLD PLATE ON CONTACT AND
   1.88 µm MIN. TIN ON SOLDERTAIL OVER
   1.25 µm MIN. NICKEL OVERALL.
   (3) : 0.25 µm MIN. GOLD PLATE ON CONTACT AND
   1.88 µm MIN. TIN ON SOLDERTAIL OVER
   1.25 µm MIN. NICKEL OVERALL.
   (4) : 0.38 µm MIN. GOLD PLATE ON CONTACT AND
   1.88 µm MIN. TIN ON SOLDERTAIL OVER
   1.25 µm MIN. NICKEL OVERALL.
   (5) : 0.75 µm MIN. GOLD PLATE ON CONTACT AND
   1.88 µm MIN. TIN ON SOLDERTAIL OVER
   1.25 µm MIN. NICKEL OVERALL
   (6) : 2.50 µm MIN. TIN OVER 1.25 m MIN. NICKEL OVERALL.
   (7) : 0.38 µm MIN. GOLD PLATE ON CONTACT AND
   2.50 µm MIN. TIN ON SOLDERTAIL OVER
   1.25 µm MIN. NICKEL OVERALL.
   (8) : 0.38 µm MIN. GOLD PLATE ON CONTACT AND
   0.05 µm MIN. GOLD FLASH ON SOLDERTAIL OVER
   1.25 µm MIN. NICKEL OVERALL.
   (9) : 0.05 - 0.25 µm MIN. GOLD FLASH OVER
   1.25 µm MIN. NICKEL OVERALL.
3. PIN PUSHOUT FORCE: 1KG MIN IN EITHER DIRECTION
4. THE ABOVE 14 CKT IS FOR ILLUSTRATION PURPOSE ONLY.
5. FOR PACKAGING OPTION PLEASE REFER TO THE TABLE.
6. RECOMMENDED PCB THICKNESS 1.60MM.
7. PRODUCT SPECIFICATION: PS-87920-019
8. WAFER TO BE FLAT WITHIN 0.003mm/mm
9. IRREGULAR CIRCUIT CUTOFF WITHIN BREAKAWAY SECTION IS PERMISSIBLE. CUTTING OR CHIPPING OF THE MAIN BODY IS NOT ACCEPTABLE.
10. PARTS ARE NOT STACKABLE ON 2.54 CENTER
11. CAP TO BE PLACED AS CENTRAL OF PART AS POSSIBLE WITH THE TOP SURFACE FLAT FOR PICK AND PLACE.
12. PACKAGING SPECIFICATION:
   TRAY: PK-89990-489
   BULK: PK-89990-491
   TUBE: PK-87914-300

REVISION OF DRAWING MAY BE CHANGED DURING FINAL RELEASED FOR PRODUCTION.

RELEASE STATUS		RELEASE DATE	

THIS DRAWING CONTAINS INFORMATION THAT IS PROPRIETARY TO MOLEX ELECTRONIC TECHNOLOGIES, LLC AND SHOULD NOT BE USED WITHOUT WRITTEN PERMISSION

MIGRATED TO NX
EC NO: 114031 2017/03/17
DRWN: FCSOO
CHK'D:
APPR: KHLIM 2017/05/09

GENERAL TOLERANCES (UNLESS SPECIFIED)	MM	INCH
4 PLACES	±	±
3 PLACES	±	±
2 PLACES	± 0.2	±
1 PLACES	±	±
0 PLACES	±	±
ANGULAR TOL ± 3.0		
DRAFT WHERE APPLICABLE MUST REMAIN WITHIN DIMENSIONS		

REV D18

DIMENSION UNITS	SCALE
MM	NTS
DRWN BY: KCHO	DATE: 2004/11/05
CHK'D BY: PTLIM	DATE: 2004/12/08
APPR BY: MLONG	DATE: 2010/09/06
DRAWING SIZE: A3	THIRD ANGLE PROJECTION

molex®

2.54MM PITCH
DUAL ROW HEADER SINGLE WAFER, T/H

PRODUCT CUSTOMER DRAWING

SERIES	MATERIAL NUMBER	CUSTOMER
87914	SEE TABLE	GENERAL MARKET

DOCUMENT NUMBER	DOC TYPE	DOC PART	SHEET NUMBER
SD-87914-013	PSD	000	1 OF 45

FORMAT: Met-lega-master-tb-prod-A3
REVISION: C
DATE: 2016/02/04

PART NO FOR TRAY PACKAGING	PART NO. FOR TUBE WITHOUT CAP PACKAGING	PART NO. FOR TUBE WITH CAP PACKAGING	PART NO. FOR TAPE & REEL WITHOUT CAP PACKAGING	PART NO. FOR TAPE & REEL WITH CAP PACKAGING	CKT SIZE	VOID POSITION	PLATING TYPE	DIMENSION				
								A	B	F	M	P
87914-0211	-------	-------	-------	-------	2	-------	1	2.54	----	10.92	5.84	2.79
87914-0221	-------	-------	-------	-------	2	-------	1	2.54	----	12.25	7.00	2.96
87914-0231	-------	-------	-------	-------	2	-------	1	2.54	----	13.38	6.09	5.00
87914-0212	-------	-------	-------	-------	2	-------	2	2.54	----	10.92	5.84	2.79
87914-0222	-------	-------	-------	-------	2	-------	2	2.54	----	12.25	7.00	2.96
87914-0232	-------	-------	-------	-------	2	-------	2	2.54	----	13.38	6.09	5.00
87914-0213	-------	-------	-------	-------	2	-------	3	2.54	----	10.92	5.84	2.79
87914-0223	-------	-------	-------	-------	2	-------	3	2.54	----	12.25	7.00	2.96
87914-0233	-------	-------	-------	-------	2	-------	3	2.54	----	13.38	6.09	5.00
87914-0214	-------	-------	-------	-------	2	-------	4	2.54	----	10.92	5.84	2.79
87914-0224	-------	-------	-------	-------	2	-------	4	2.54	----	12.25	7.00	2.96
87914-0234	-------	-------	-------	-------	2	-------	4	2.54	----	13.38	6.09	5.00
87914-0215	-------	-------	-------	-------	2	-------	5	2.54	----	10.92	5.84	2.79
87914-0225	-------	-------	-------	-------	2	-------	5	2.54	----	12.25	7.00	2.96
87914-0235	-------	-------	-------	-------	2	-------	5	2.54	----	13.38	6.09	5.00
87914-0216	-------	-------	-------	-------	2	-------	6	2.54	----	10.92	5.84	2.79
87914-0226	-------	-------	-------	-------	2	-------	6	2.54	----	12.25	7.00	2.96
87914-0236	-------	-------	-------	-------	2	-------	6	2.54	----	13.38	6.09	5.00

THIS DRAWING CONTAINS INFORMATION THAT IS PROPRIETARY TO MOLEX ELECTRONIC TECHNOLOGIES, LLC AND SHOULD NOT BE USED WITHOUT WRITTEN PERMISSION

MIGRATED TO NX

EC NO: 114031 2017/03/17
DRWN: FCSOO
CHK'D:
APPR: KHLIM 2017/05/09

D18 REV

GENERAL TOLERANCES (UNLESS SPECIFIED)

	MM	INCH
4 PLACES	±	±
3 PLACES	±	±
2 PLACES	± 0.2	±
1 PLACES	±	±
0 PLACES	±	±

ANGULAR TOL ± 3.0

DRAFT WHERE APPLICABLE MUST REMAIN WITHIN DIMENSIONS

DIMENSION UNITS: MM
SCALE: NTS

DRWN BY: KCHO DATE: 2004/11/05
CHK'D BY: PTLIM DATE: 2004/12/08
APPR BY: MLONG DATE: 2010/09/06

DRAWING SIZE: A3
THIRD ANGLE PROJECTION

molex®

2.54MM PITCH
DUAL ROW HEADER SINGLE WAFER, T/H

PRODUCT CUSTOMER DRAWING

SERIES: 87914
MATERIAL NUMBER: SEE TABLE
CUSTOMER: GENERAL MARKET

DOCUMENT NUMBER: SD-87914-013
DOC TYPE: PSD
DOC PART: 000
SHEET NUMBER: 2 OF 45

RELEASE STATUS
RELEASE DATE

FORMAT: Met-lega-master-tb-prod-A3
REVISION: C
DATE: 2016/02/04

PART NO FOR TRAY PACKAGING	PART NO. FOR TUBE WITHOUT CAP PACKAGING	PART NO. FOR TUBE WITH CAP PACKAGING	PART NO. FOR TAPE & REEL WITHOUT CAP PACKAGING	PART NO. FOR TAPE & REEL WITH CAP PACKAGING	CKT SIZE	VOID POSITION	PLATING TYPE	DIMENSION				
								A	B	F	M	P
87914-0411	-------	-------	-------	-------	4	-------	1	5.08	2.54	10.92	5.84	2.79
87914-0421	-------	-------	-------	-------	4	-------	1	5.08	2.54	12.25	7.00	2.96
87914-0431	-------	-------	-------	-------	4	-------	1	5.08	2.54	13.38	6.09	5.00
87914-0412	-------	-------	-------	-------	4	-------	2	5.08	2.54	10.92	5.84	2.79
87914-0422	-------	-------	-------	-------	4	-------	2	5.08	2.54	12.25	7.00	2.96
87914-0432	-------	-------	-------	-------	4	-------	2	5.08	2.54	13.38	6.09	5.00
87914-0413	-------	-------	-------	-------	4	-------	3	5.08	2.54	10.92	5.84	2.79
87914-0423	-------	-------	-------	-------	4	-------	3	5.08	2.54	12.25	7.00	2.96
87914-0433	-------	-------	-------	-------	4	-------	3	5.08	2.54	13.38	6.09	5.00
87914-0414	-------	-------	-------	-------	4	-------	4	5.08	2.54	10.92	5.84	2.79
87914-0424	-------	-------	-------	-------	4	-------	4	5.08	2.54	12.25	7.00	2.96
87914-0434	-------	-------	-------	-------	4	-------	4	5.08	2.54	13.38	6.09	5.00
87914-0415	-------	-------	-------	-------	4	-------	5	5.08	2.54	10.92	5.84	2.79
87914-0425	-------	-------	-------	-------	4	-------	5	5.08	2.54	12.25	7.00	2.96
87914-0435	-------	-------	-------	-------	4	-------	5	5.08	2.54	13.38	6.09	5.00
87914-0416	-------	-------	-------	-------	4	-------	6	5.08	2.54	10.92	5.84	2.79
87914-0426	-------	-------	-------	-------	4	-------	6	5.08	2.54	12.25	7.00	2.96
87914-0436	-------	-------	-------	-------	4	-------	6	5.08	2.54	13.38	6.09	5.00

THIS DRAWING CONTAINS INFORMATION THAT IS PROPRIETARY TO MOLEX ELECTRONIC TECHNOLOGIES, LLC AND SHOULD NOT BE USED WITHOUT WRITTEN PERMISSION

MIGRATED TO NX
EC NO: 114031 2017/03/17
DRWN: FCSOO
CHK'D: 2017/05/09
APPR: KHLIM

D18 REV

GENERAL TOLERANCES (UNLESS SPECIFIED)

	MM	INCH
4 PLACES	±	±
3 PLACES	±	±
2 PLACES	± 0.2	±
1 PLACES	±	±
0 PLACES	±	±

ANGULAR TOL ± 3.0

DRAFT WHERE APPLICABLE MUST REMAIN WITHIN DIMENSIONS

DIMENSION UNITS: MM
SCALE: NTS
DRWN BY: KCHO DATE: 2004/11/05
CHK'D BY: PTLIM DATE: 2004/12/08
APPR BY: MLONG DATE: 2010/09/06
DRAWING SIZE: A3
THIRD ANGLE PROJECTION

molex®

2.54MM PITCH
DUAL ROW HEADER SINGLE WAFER, T/H

PRODUCT CUSTOMER DRAWING

SERIES	MATERIAL NUMBER	CUSTOMER
87914	SEE TABLE	GENERAL MARKET

DOCUMENT NUMBER	DOC TYPE	DOC PART	SHEET NUMBER
SD-87914-013	PSD	000	3 OF 45

RELEASE STATUS | RELEASE DATE

FORMAT: Met-lega-master-tb-prod-A3
REVISION: C
DATE: 2016/02/04

PART NO FOR TRAY PACKAGING	PART NO. FOR TUBE WITHOUT CAP PACKAGING	PART NO. FOR TUBE WITH CAP PACKAGING	PART NO. FOR TAPE & REEL WITHOUT CAP PACKAGING	PART NO. FOR TAPE & REEL WITH CAP PACKAGING	CKT SIZE	VOID POSITION	PLATING TYPE	DIMENSION					
								A	B	F	M	P	G
87914-0611	-------	-------	-------	-------	6	-------	1	7.62	5.08	10.92	5.84	2.79	----
87914-0621	-------	-------	-------	-------	6	-------	1	7.62	5.08	12.25	7.00	2.96	----
87914-0631	-------	-------	-------	-------	6	-------	1	7.62	5.08	13.38	6.09	5.00	----
87914-0612	-------	-------	-------	-------	6	-------	2	7.62	5.08	10.92	5.84	2.79	----
87914-0622	-------	-------	-------	-------	6	-------	2	7.62	5.08	12.25	7.00	2.96	----
87914-0632	-------	-------	-------	-------	6	-------	2	7.62	5.08	13.38	6.09	5.00	----
87914-0613	-------	-------	-------	-------	6	-------	3	7.62	5.08	10.92	5.84	2.79	----
87914-0623	-------	-------	-------	-------	6	-------	3	7.62	5.08	12.25	7.00	2.96	----
87914-0633	-------	-------	-------	-------	6	-------	3	7.62	5.08	13.38	6.09	5.00	----
87914-0614	-------	-------	-------	-------	6	-------	4	7.62	5.08	10.92	5.84	2.79	----
87914-0624	-------	-------	-------	-------	6	-------	4	7.62	5.08	12.25	7.00	2.96	----
87914-0634	-------	-------	-------	-------	6	-------	4	7.62	5.08	13.38	6.09	5.00	----
87914-0615	-------	-------	-------	-------	6	-------	5	7.62	5.08	10.92	5.84	2.79	----
87914-0625	-------	-------	-------	-------	6	-------	5	7.62	5.08	12.25	7.00	2.96	----
87914-0635	-------	-------	-------	-------	6	-------	5	7.62	5.08	13.38	6.09	5.00	----
87914-0616	-------	-------	-------	-------	6	-------	6	7.62	5.08	10.92	5.84	2.79	----
87914-0626	-------	-------	-------	-------	6	-------	6	7.62	5.08	12.25	7.00	2.96	----
87914-0636	-------	-------	-------	-------	6	-------	6	7.62	5.08	13.38	6.09	5.00	----

THIS DRAWING CONTAINS INFORMATION THAT IS PROPRIETARY TO MOLEX ELECTRONIC TECHNOLOGIES, LLC AND SHOULD NOT BE USED WITHOUT WRITTEN PERMISSION

MIGRATED TO NX

EC NO: 114031 2017/03/17
DRWN: FCSOO
CHK'D: 2017/05/09
APPR: KHLIM

D18 REV

GENERAL TOLERANCES (UNLESS SPECIFIED)

	MM	INCH
4 PLACES	±	±
3 PLACES	±	±
2 PLACES	± 0.2	±
1 PLACES	±	±
0 PLACES	±	±

ANGULAR TOL ± 3.0

DRAFT WHERE APPLICABLE MUST REMAIN WITHIN DIMENSIONS

DIMENSION UNITS: MM
SCALE: NTS

DRWN BY: KCHO DATE: 2004/11/05
CHK'D BY: PTLIM DATE: 2004/12/08
APPR BY: MLONG DATE: 2010/09/06

DRAWING SIZE: A3
THIRD ANGLE PROJECTION

molex®

2.54MM PITCH
DUAL ROW HEADER SINGLE WAFER, T/H

PRODUCT CUSTOMER DRAWING

SERIES: 87914
MATERIAL NUMBER: SEE TABLE
CUSTOMER: GENERAL MARKET

DOCUMENT NUMBER: SD-87914-013
DOC TYPE: PSD
DOC PART: 000
SHEET NUMBER: 4 OF 45

RELEASE STATUS
RELEASE DATE

FORMAT: Met-lega-master-tb-prod-A3
REVISION: C
DATE: 2016/02/04

PART NO FOR TRAY PACKAGING	PART NO. FOR TUBE WITHOUT CAP PACKAGING	PART NO. FOR TUBE WITH CAP PACKAGING	PART NO. FOR TAPE & REEL WITHOUT CAP PACKAGING	PART NO. FOR TAPE & REEL WITH CAP PACKAGING	CKT SIZE	VOID POSITION	PLATING TYPE	DIMENSION				
								A	B	F	M	P
87914-0009	-------	-------	-------	-------	6	-------	1	7.62	5.08	18.84	13.25	3.30
87914-0642	-------	-------	-------	-------	6	-------	2	7.62	5.08	18.84	13.25	3.30
87914-0643	-------	-------	-------	-------	6	-------	3	7.62	5.08	18.84	13.25	3.30
87914-0644	-------	-------	-------	-------	6	-------	4	7.62	5.08	18.84	13.25	3.30
87914-0645	-------	-------	-------	-------	6	-------	5	7.62	5.08	18.84	13.25	3.30
87914-0646	-------	-------	-------	-------	6	-------	6	7.62	5.08	18.84	13.25	3.30

THIS DRAWING CONTAINS INFORMATION THAT IS PROPRIETARY TO MOLEX ELECTRONIC TECHNOLOGIES, LLC AND SHOULD NOT BE USED WITHOUT WRITTEN PERMISSION

MIGRATED TO NX

EC NO: 114031 2017/03/17
DRWN: FCSOO
CHK'D: 2017/05/09
APPR: KHLIM

D18 REV

GENERAL TOLERANCES (UNLESS SPECIFIED)

	MM	INCH
4 PLACES	±	±
3 PLACES	±	±
2 PLACES	± 0.2	±
1 PLACES	±	±
0 PLACES	±	±

ANGULAR TOL ± 3.0

DRAFT WHERE APPLICABLE MUST REMAIN WITHIN DIMENSIONS

DIMENSION UNITS: MM
SCALE: NTS

DRWN BY: KCHO DATE: 2004/11/05
CHK'D BY: PTLIM DATE: 2004/12/08
APPR BY: MLONG DATE: 2010/09/06

DRAWING SIZE: A3
THIRD ANGLE PROJECTION

molex®

2.54MM PITCH
DUAL ROW HEADER SINGLE WAFER, T/H

PRODUCT CUSTOMER DRAWING

SERIES	MATERIAL NUMBER	CUSTOMER
87914	SEE TABLE	GENERAL MARKET

DOCUMENT NUMBER	DOC TYPE	DOC PART	SHEET NUMBER
SD-87914-013	PSD	000	5 OF 45

RELEASE STATUS		RELEASE DATE	

FORMAT: Met-lega-master-tb-prod-A3
REVISION: C
DATE: 2016/02/04

PART NO FOR TRAY PACKAGING	PART NO. FOR TUBE WITHOUT CAP PACKAGING	PART NO. FOR TUBE WITH CAP PACKAGING	PART NO. FOR TAPE & REEL WITHOUT CAP PACKAGING	PART NO. FOR TAPE & REEL WITH CAP PACKAGING	CKT SIZE	VOID POSITION	PLATING TYPE	DIMENSION					
								A	B	F	M	P	G
87914-0811	-------	-------	-------	-------	8	-------	1	10.16	7.62	10.92	5.84	2.79	----
87914-0821	-------	-------	-------	-------	8	-------	1	10.16	7.62	12.25	7.00	2.96	----
87914-0831	-------	-------	-------	-------	8	-------	1	10.16	7.62	13.38	6.09	5.00	----
87914-0812	-------	-------	-------	-------	8	-------	2	10.16	7.62	10.92	5.84	2.79	----
87914-0822	-------	-------	-------	-------	8	-------	2	10.16	7.62	12.25	7.00	2.96	----
87914-0832	-------	-------	-------	-------	8	-------	2	10.16	7.62	13.38	6.09	5.00	----
87914-0813	-------	-------	-------	-------	8	-------	3	10.16	7.62	10.92	5.84	2.79	----
87914-0823	-------	-------	-------	-------	8	-------	3	10.16	7.62	12.25	7.00	2.96	----
87914-0833	-------	-------	-------	-------	8	-------	4	10.16	7.62	13.38	6.09	5.00	----
87914-0814	-------	-------	-------	-------	8	-------	4	10.16	7.62	10.92	5.84	2.79	----
87914-0824	-------	-------	-------	-------	8	-------	4	10.16	7.62	12.25	7.00	2.96	----
87914-0834	-------	-------	-------	-------	8	-------	4	10.16	7.62	13.38	6.09	5.00	----
87914-0815	-------	-------	-------	-------	8	-------	5	10.16	7.62	10.92	5.84	2.79	----
87914-0825	-------	-------	-------	-------	8	-------	5	10.16	7.62	12.25	7.00	2.96	----
87914-0835	-------	-------	-------	-------	8	-------	5	10.16	7.62	13.38	6.09	5.00	----
87914-0816	-------	-------	-------	-------	8	-------	6	10.16	7.62	10.92	5.84	2.79	----
87914-0826	-------	-------	-------	-------	8	-------	6	10.16	7.62	12.25	7.00	2.96	----
87914-0836	-------	-------	-------	-------	8	-------	6	10.16	7.62	13.38	6.09	5.00	----

THIS DRAWING CONTAINS INFORMATION THAT IS PROPRIETARY TO MOLEX ELECTRONIC TECHNOLOGIES, LLC AND SHOULD NOT BE USED WITHOUT WRITTEN PERMISSION

MIGRATED TO NX

EC NO: 114031 2017/03/17
DRWN: FCSOO
CHK'D: 2017/05/09
APPR: KHLIM

D18 REV

GENERAL TOLERANCES (UNLESS SPECIFIED)

	MM	INCH
4 PLACES	±	±
3 PLACES	±	±
2 PLACES	± 0.2	±
1 PLACES	±	±
0 PLACES	±	±

ANGULAR TOL ± 3.0

DRAFT WHERE APPLICABLE MUST REMAIN WITHIN DIMENSIONS

DIMENSION UNITS: MM
SCALE: NTS

DRWN BY: KCHO DATE: 2004/11/05
CHK'D BY: PTLIM DATE: 2004/12/08
APPR BY: MLONG DATE: 2010/09/06

DRAWING SIZE: A3
THIRD ANGLE PROJECTION

molex®

2.54MM PITCH
DUAL ROW HEADER SINGLE WAFER, T/H

PRODUCT CUSTOMER DRAWING

SERIES	MATERIAL NUMBER	CUSTOMER
87914	SEE TABLE	GENERAL MARKET

DOCUMENT NUMBER	DOC TYPE	DOC PART	SHEET NUMBER
SD-87914-013	PSD	000	6 OF 45

RELEASE STATUS		RELEASE DATE	

FORMAT: Met-lega-master-tb-prod-A3
REVISION: C
DATE: 2016/02/04

PART NO FOR TRAY PACKAGING	PART NO. FOR TUBE WITHOUT CAP PACKAGING	PART NO. FOR TUBE WITH CAP PACKAGING	PART NO. FOR TAPE & REEL WITHOUT CAP PACKAGING	PART NO. FOR TAPE & REEL WITH CAP PACKAGING	CKT SIZE	VOID POSITION	PLATING TYPE	DIMENSION				
								A	B	F	M	P
87914-0841	-------	-------	-------	-------	8	-------	1	10.16	7.62	13.51	8.75	2.47
87914-0842	-------	-------	-------	-------	8	-------	2	10.16	7.62	13.51	8.75	2.47
87914-0843	-------	-------	-------	-------	8	-------	3	10.16	7.62	13.51	8.75	2.47
87914-0844	-------	-------	-------	-------	8	-------	4	10.16	7.62	13.51	8.75	2.47
87914-0845	-------	-------	-------	-------	8	-------	5	10.16	7.62	13.51	8.75	2.47
87914-0005	-------	-------	-------	-------	8	-------	6	10.16	7.62	13.51	8.75	2.47

THIS DRAWING CONTAINS INFORMATION THAT IS PROPRIETARY TO MOLEX ELECTRONIC TECHNOLOGIES, LLC AND SHOULD NOT BE USED WITHOUT WRITTEN PERMISSION

MIGRATED TO NX

EC NO: 114031 2017/03/17
DRWN: FCSOO
CHK'D: 2017/05/09
APPR: KHLIM

D18 REV

GENERAL TOLERANCES (UNLESS SPECIFIED)

	MM	INCH
4 PLACES	±	±
3 PLACES	±	±
2 PLACES	± 0.2	±
1 PLACES	±	±
0 PLACES	±	±

ANGULAR TOL ± 3.0

DRAFT WHERE APPLICABLE MUST REMAIN WITHIN DIMENSIONS

DIMENSION UNITS: MM
SCALE: NTS

DRWN BY: KCHO DATE: 2004/11/05
CHK'D BY: PTLIM DATE: 2004/12/08
APPR BY: MLONG DATE: 2010/09/06

DRAWING SIZE: A3
THIRD ANGLE PROJECTION

molex®

2.54MM PITCH
DUAL ROW HEADER SINGLE WAFER, T/H

PRODUCT CUSTOMER DRAWING

SERIES: 87914
MATERIAL NUMBER: SEE TABLE
CUSTOMER: GENERAL MARKET

DOCUMENT NUMBER: SD-87914-013
DOC TYPE: PSD
DOC PART: 000
SHEET NUMBER: 7 OF 45

RELEASE STATUS
RELEASE DATE

FORMAT: Met-lega-master-tb-prod-A3
REVISION: C
DATE: 2016/02/04

PART NO FOR TRAY PACKAGING	PART NO. FOR TUBE WITHOUT CAP PACKAGING	PART NO. FOR TUBE WITH CAP PACKAGING	PART NO. FOR TAPE & REEL WITHOUT CAP PACKAGING	PART NO. FOR TAPE & REEL WITH CAP PACKAGING	PART NO. FOR BULK PACKAGING	CKT SIZE	VOID POSITION	PLATING TYPE	DIMENSION					
									A	B	F	M	P	G
87914-1011	-------	-------	-------	-------	-------	10	-------	1	12.70	10.16	10.92	5.84	2.79	----
87914-1021	-------	-------	-------	-------	-------	10	-------	1	12.70	10.16	12.25	7.00	2.96	----
87914-1031	-------	-------	-------	-------	-------	10	-------	1	12.70	10.16	13.38	6.09	5.00	----
87914-1012	-------	-------	-------	-------	-------	10	-------	2	12.70	10.16	10.92	5.84	2.79	----
87914-1022	-------	-------	-------	-------	-------	10	-------	2	12.70	10.16	12.25	7.00	2.96	----
87914-1032	-------	-------	-------	-------	-------	10	-------	2	12.70	10.16	13.38	6.09	5.00	----
87914-1013	-------	-------	-------	-------	-------	10	-------	3	12.70	10.16	10.92	5.84	2.79	----
87914-1023	-------	-------	-------	-------	-------	10	-------	3	12.70	10.16	12.25	7.00	2.96	----
87914-1033	-------	-------	-------	-------	-------	10	-------	3	12.70	10.16	13.38	6.09	5.00	----
87914-1014	-------	-------	-------	-------	-------	10	-------	4	12.70	10.16	10.92	5.84	2.79	----
87914-1024	-------	-------	-------	-------	-------	10	-------	4	12.70	10.16	12.25	7.00	2.96	----
87914-1034	-------	-------	-------	-------	-------	10	-------	4	12.70	10.16	13.38	6.09	5.00	----
87914-1015	-------	-------	-------	-------	-------	10	-------	5	12.70	10.16	10.92	5.84	2.79	----
87914-1025	-------	-------	-------	-------	-------	10	-------	5	12.70	10.16	12.25	7.00	2.96	----
87914-1035	-------	-------	-------	-------	-------	10	-------	5	12.70	10.16	13.38	6.09	5.00	----
87914-1016	-------	-------	-------	-------	-------	10	-------	6	12.70	10.16	10.92	5.84	2.79	----
87914-1026	-------	-------	-------	-------	-------	10	-------	6	12.70	10.16	12.25	7.00	2.96	----
87914-1036	-------	-------	-------	-------	-------	10	-------	6	12.70	10.16	13.38	6.09	5.00	----
-------	-------	-------	-------	-------	87914-1037	10	9	4	12.70	10.16	10.92	5.84	2.79	----

THIS DRAWING CONTAINS INFORMATION THAT IS PROPRIETARY TO MOLEX ELECTRONIC TECHNOLOGIES, LLC AND SHOULD NOT BE USED WITHOUT WRITTEN PERMISSION

MIGRATED TO NX

EC NO: 114031 2017/03/17
DRWN: FCSOO
CHK'D: 2017/05/09
APPR: KHLIM

D18 REV

GENERAL TOLERANCES (UNLESS SPECIFIED)

	MM	INCH
4 PLACES	±	±
3 PLACES	±	±
2 PLACES	± 0.2	±
1 PLACES	±	±
0 PLACES	±	±

ANGULAR TOL ± 3.0

DRAFT WHERE APPLICABLE MUST REMAIN WITHIN DIMENSIONS

DIMENSION UNITS: MM
SCALE: NTS

DRWN BY: KCHO DATE: 2004/11/05
CHK'D BY: PTLIM DATE: 2004/12/08
APPR BY: MLONG DATE: 2010/09/06

DRAWING SIZE: A3
THIRD ANGLE PROJECTION

molex®

2.54MM PITCH
DUAL ROW HEADER SINGLE WAFER, T/H

PRODUCT CUSTOMER DRAWING

SERIES	MATERIAL NUMBER	CUSTOMER
87914	SEE TABLE	GENERAL MARKET

DOCUMENT NUMBER	DOC TYPE	DOC PART	SHEET NUMBER
SD-87914-013	PSD	000	8 OF 45

RELEASE STATUS | RELEASE DATE

FORMAT: Met-lega-master-tb-prod-A3
REVISION: C
DATE: 2016/02/04

PART NO FOR TRAY PACKAGING	PART NO. FOR TUBE WITHOUT CAP PACKAGING	PART NO. FOR TUBE WITH CAP PACKAGING	PART NO. FOR TAPE & REEL WITHOUT CAP PACKAGING	PART NO. FOR TAPE & REEL WITH CAP PACKAGING	CKT SIZE	VOID POSITION	PLATING TYPE	DIMENSION				
								A	B	F	M	P
87914-1211	-------	-------	-------	-------	12	-------	1	15.24	12.70	10.92	5.84	2.79
-------	87914-1291	-------	-------	-------	12	-------	9	15.24	12.70	10.92	5.84	2.79
87914-1221	-------	-------	-------	-------	12	-------	1	15.24	12.70	12.25	7.00	2.96
87914-1231	-------	-------	-------	-------	12	-------	1	15.24	12.70	13.38	6.09	5.00
87914-1212	-------	-------	-------	-------	12	-------	2	15.24	12.70	10.92	5.84	2.79
87914-1222	-------	-------	-------	-------	12	-------	2	15.24	12.70	12.25	7.00	2.96
87914-1232	-------	-------	-------	-------	12	-------	2	15.24	12.70	13.38	6.09	5.00
87914-1213	-------	-------	-------	-------	12	-------	3	15.24	12.70	10.92	5.84	2.79
87914-1223	-------	-------	-------	-------	12	-------	3	15.24	12.70	12.25	7.00	2.96
87914-1233	-------	-------	-------	-------	12	-------	3	15.24	12.70	13.38	6.09	5.00
87914-1214	-------	-------	-------	-------	12	-------	4	15.24	12.70	10.92	5.84	2.79
87914-1224	-------	-------	-------	-------	12	-------	4	15.24	12.70	12.25	7.00	2.96
87914-1234	-------	-------	-------	-------	12	-------	4	15.24	12.70	13.38	6.09	5.00
87914-1215	-------	-------	-------	-------	12	-------	5	15.24	12.70	10.92	5.84	2.79
87914-1225	-------	-------	-------	-------	12	-------	5	15.24	12.70	12.25	7.00	2.96
87914-1235	-------	-------	-------	-------	12	-------	5	15.24	12.70	13.38	6.09	5.00
87914-1216	-------	-------	-------	-------	12	-------	6	15.24	12.70	10.92	5.84	2.79
87914-1226	-------	-------	-------	-------	12	-------	6	15.24	12.70	12.25	7.00	2.96
87914-1236	-------	-------	-------	-------	12	-------	6	15.24	12.70	13.38	6.09	5.00

THIS DRAWING CONTAINS INFORMATION THAT IS PROPRIETARY TO MOLEX ELECTRONIC TECHNOLOGIES, LLC AND SHOULD NOT BE USED WITHOUT WRITTEN PERMISSION

MIGRATED TO NX

EC NO: 114031 2017/03/17
DRWN: FCSOO
CHK'D: KHLIM 2017/05/09
APPR:

REV D18

GENERAL TOLERANCES (UNLESS SPECIFIED)

	MM	INCH
4 PLACES	±	±
3 PLACES	±	±
2 PLACES	± 0.2	±
1 PLACES	±	±
0 PLACES	±	±

ANGULAR TOL ± 3.0

DRAFT WHERE APPLICABLE MUST REMAIN WITHIN DIMENSIONS

DIMENSION UNITS: MM
SCALE: NTS

DRWN BY: KCHO DATE: 2004/11/05
CHK'D BY: PTLIM DATE: 2004/12/08
APPR BY: MLONG DATE: 2010/09/06

DRAWING SIZE: A3
THIRD ANGLE PROJECTION

molex®

2.54MM PITCH
DUAL ROW HEADER SINGLE WAFER, T/H

PRODUCT CUSTOMER DRAWING

SERIES: 87914
MATERIAL NUMBER: SEE TABLE
CUSTOMER: GENERAL MARKET

DOCUMENT NUMBER: SD-87914-013
DOC TYPE: PSD
DOC PART: 000
SHEET NUMBER: 9 OF 45

RELEASE STATUS
RELEASE DATE

FORMAT: Met-lega-master-tb-prod-A3
REVISION: C
DATE: 2016/02/04

PART NO FOR TRAY PACKAGING	PART NO. FOR TUBE WITHOUT CAP PACKAGING	PART NO. FOR TUBE WITH CAP PACKAGING	PART NO. FOR TAPE & REEL WITHOUT CAP PACKAGING	PART NO. FOR TAPE & REEL WITH CAP PACKAGING	CKT SIZE	VOID POSITION	PLATING TYPE	DIMENSION				
								A	B	F	M	P
87914-1251	-------	-------	-------	-------	12	-------	1	15.24	12.70	18.40	13.08	3.03
87914-1252	-------	-------	-------	-------	12	-------	2	15.24	12.70	18.40	13.08	3.03
87914-1253	-------	-------	-------	-------	12	-------	3	15.24	12.70	18.40	13.08	3.03
87914-1254	-------	-------	-------	-------	12	-------	4	15.24	12.70	18.40	13.08	3.03
87914-1255	-------	-------	-------	-------	12	-------	5	15.24	12.70	18.40	13.08	3.03
87914-1256	-------	-------	-------	-------	12	-------	6	15.24	12.70	18.40	13.08	3.03
87914-1241	-------	-------	-------	-------	12	-------	1	15.24	12.70	12.50	6.95	3.26
87914-1242	-------	-------	-------	-------	12	-------	2	15.24	12.70	12.50	6.95	3.26
87914-1243	-------	-------	-------	-------	12	-------	3	15.24	12.70	12.50	6.95	3.26
87914-1244	-------	-------	-------	-------	12	-------	4	15.24	12.70	12.50	6.95	3.26
87914-1245	-------	-------	-------	-------	12	-------	5	15.24	12.70	12.50	6.95	3.26

THIS DRAWING CONTAINS INFORMATION THAT IS PROPRIETARY TO MOLEX ELECTRONIC TECHNOLOGIES, LLC AND SHOULD NOT BE USED WITHOUT WRITTEN PERMISSION

MIGRATED TO NX

EC NO: 114031 2017/03/17
DRWN: FCSOO
CHK'D: 2017/05/09
APPR: KHLIM

D18 REV

GENERAL TOLERANCES (UNLESS SPECIFIED)

	MM	INCH
4 PLACES	±	±
3 PLACES	±	±
2 PLACES	± 0.2	±
1 PLACES	±	±
0 PLACES	±	±

ANGULAR TOL ± 3.0

DRAFT WHERE APPLICABLE MUST REMAIN WITHIN DIMENSIONS

DIMENSION UNITS: MM
SCALE: NTS
DRWN BY: KCHO DATE: 2004/11/05
CHK'D BY: PTLIM DATE: 2004/12/08
APPR BY: MLONG DATE: 2010/09/06
DRAWING SIZE: A3
THIRD ANGLE PROJECTION

molex®

2.54MM PITCH
DUAL ROW HEADER SINGLE WAFER, T/H

PRODUCT CUSTOMER DRAWING

SERIES	MATERIAL NUMBER	CUSTOMER
87914	SEE TABLE	GENERAL MARKET

DOCUMENT NUMBER	DOC TYPE	DOC PART	SHEET NUMBER
SD-87914-013	PSD	000	10 OF 45

RELEASE STATUS		RELEASE DATE	

FORMAT: Met-lega-master-tb-prod-A3
REVISION: C
DATE: 2016/02/04

PART NO FOR TRAY PACKAGING	PART NO. FOR TUBE WITHOUT CAP PACKAGING	PART NO. FOR TUBE WITH CAP PACKAGING	PART NO. FOR TAPE & REEL WITHOUT CAP PACKAGING	PART NO. FOR TAPE & REEL WITH CAP PACKAGING	CKT SIZE	VOID POSITION	PLATING TYPE	DIMENSION				
								A	B	F	M	P
87914-1411	-------	-------	-------	-------	14	-------	1	17.78	15.24	10.92	5.84	2.79
87914-1421	-------	-------	-------	-------	14	-------	1	17.78	15.24	12.25	7.00	2.96
87914-1431	-------	-------	-------	-------	14	-------	1	17.78	15.24	13.38	6.09	5.00
87914-1412	-------	-------	-------	-------	14	-------	2	17.78	15.24	10.92	5.84	2.79
87914-1422	-------	-------	-------	-------	14	-------	2	17.78	15.24	12.25	7.00	2.96
87914-1432	-------	-------	-------	-------	14	-------	2	17.78	15.24	13.38	6.09	5.00
87914-1413	-------	-------	-------	-------	14	-------	3	17.78	15.24	10.92	5.84	2.79
87914-1423	-------	-------	-------	-------	14	-------	3	17.78	15.24	12.25	7.00	2.96
87914-1433	-------	-------	-------	-------	14	-------	3	17.78	15.24	13.38	6.09	5.00
87914-1414	-------	-------	-------	-------	14	-------	4	17.78	15.24	10.92	5.84	2.79
87914-1424	-------	-------	-------	-------	14	-------	4	17.78	15.24	12.25	7.00	2.96
87914-1434	-------	-------	-------	-------	14	-------	4	17.78	15.24	13.38	6.09	5.00
87914-1415	-------	-------	-------	-------	14	-------	5	17.78	15.24	10.92	5.84	2.79
87914-1425	-------	-------	-------	-------	14	-------	5	17.78	15.24	12.25	7.00	2.96
87914-1435	-------	-------	-------	-------	14	-------	5	17.78	15.24	13.38	6.09	5.00
87914-1416	-------	-------	-------	-------	14	-------	6	17.78	15.24	10.92	5.84	2.79
87914-1426	-------	-------	-------	-------	14	-------	6	17.78	15.24	12.25	7.00	2.96
87914-1436	-------	-------	-------	-------	14	-------	6	17.78	15.24	13.38	6.09	5.00

THIS DRAWING CONTAINS INFORMATION THAT IS PROPRIETARY TO MOLEX ELECTRONIC TECHNOLOGIES, LLC AND SHOULD NOT BE USED WITHOUT WRITTEN PERMISSION

MIGRATED TO NX

EC NO: 114031 2017/03/17
DRWN: FCSOO
CHK'D: 2017/05/09
APPR: KHLIM

D18 REV

GENERAL TOLERANCES (UNLESS SPECIFIED)

	MM	INCH
4 PLACES	±	±
3 PLACES	±	±
2 PLACES	± 0.2	±
1 PLACES	±	±
0 PLACES	±	±

ANGULAR TOL ± 3.0

DRAFT WHERE APPLICABLE MUST REMAIN WITHIN DIMENSIONS

DIMENSION UNITS: MM
SCALE: NTS

DRWN BY: KCHO DATE: 2004/11/05
CHK'D BY: PTLIM DATE: 2004/12/08
APPR BY: MLONG DATE: 2010/09/06

DRAWING SIZE: A3
THIRD ANGLE PROJECTION

molex®

2.54MM PITCH
DUAL ROW HEADER SINGLE WAFER, T/H

PRODUCT CUSTOMER DRAWING

SERIES: 87914
MATERIAL NUMBER: SEE TABLE
CUSTOMER: GENERAL MARKET

DOCUMENT NUMBER: SD-87914-013
DOC TYPE: PSD
DOC PART: 000
SHEET NUMBER: 11 OF 45

RELEASE STATUS
RELEASE DATE

FORMAT: Met-lega-master-tb-prod-A3
REVISION: C
DATE: 2016/02/04

PART NO FOR TRAY PACKAGING	PART NO. FOR TUBE WITHOUT CAP PACKAGING	PART NO. FOR TUBE WITH CAP PACKAGING	PART NO. FOR TAPE & REEL WITHOUT CAP PACKAGING	PART NO. FOR TAPE & REEL WITH CAP PACKAGING	CKT SIZE	VOID POSITION	PLATING TYPE	DIMENSION				
								A	B	F	M	P
87914-1441	-------	-------	-------	-------	14	-------	1	17.78	15.24	13.42	8.08	3.05
87914-1442	-------	-------	-------	-------	14	-------	2	17.78	15.24	13.42	8.08	3.05
87914-1443	-------	-------	-------	-------	14	-------	3	17.78	15.24	13.42	8.08	3.05
87914-1444	-------	-------	-------	-------	14	-------	4	17.78	15.24	13.42	8.08	3.05
87914-1445	-------	-------	-------	-------	14	-------	5	17.78	15.24	13.42	8.08	3.05

THIS DRAWING CONTAINS INFORMATION THAT IS PROPRIETARY TO MOLEX ELECTRONIC TECHNOLOGIES, LLC AND SHOULD NOT BE USED WITHOUT WRITTEN PERMISSION

MIGRATED TO NX

EC NO: 114031 2017/03/17
DRWN: FCSOO
CHK'D: 2017/05/09
APPR: KHLIM

D18 REV

GENERAL TOLERANCES (UNLESS SPECIFIED)

	MM	INCH
4 PLACES	±	±
3 PLACES	±	±
2 PLACES	± 0.2	±
1 PLACES	±	±
0 PLACES	±	±

ANGULAR TOL ± 3.0

DRAFT WHERE APPLICABLE MUST REMAIN WITHIN DIMENSIONS

DIMENSION UNITS: MM
SCALE: NTS

DRWN BY: KCHO DATE: 2004/11/05
CHK'D BY: PTLIM DATE: 2004/12/08
APPR BY: MLONG DATE: 2010/09/06

DRAWING SIZE: A3
THIRD ANGLE PROJECTION

molex®

2.54MM PITCH
DUAL ROW HEADER SINGLE WAFER, T/H

PRODUCT CUSTOMER DRAWING

SERIES	MATERIAL NUMBER	CUSTOMER
87914	SEE TABLE	GENERAL MARKET

DOCUMENT NUMBER	DOC TYPE	DOC PART	SHEET NUMBER
SD-87914-013	PSD	000	12 OF 45

RELEASE STATUS		RELEASE DATE	

FORMAT: Met-lega-master-tb-prod-A3
REVISION: C
DATE: 2016/02/04

PART NO FOR TRAY PACKAGING	PART NO. FOR TUBE WITHOUT CAP PACKAGING	PART NO. FOR TUBE WITH CAP PACKAGING	PART NO. FOR TAPE & REEL WITHOUT CAP PACKAGING	PART NO. FOR TAPE & REEL WITH CAP PACKAGING	CKT SIZE	VOID POSITION	PLATING TYPE	DIMENSION				
								A	B	F	M	P
87914-1611	-------	-------	-------	-------	16	-------	1	20.32	17.78	10.92	5.84	2.79
87914-1621	-------	-------	-------	-------	16	-------	1	20.32	17.78	12.25	7.00	2.96
87914-1631	-------	-------	-------	-------	16	-------	1	20.32	17.78	13.38	6.09	5.00
87914-1612	-------	-------	-------	-------	16	-------	2	20.32	17.78	10.92	5.84	2.79
87914-1622	-------	-------	-------	-------	16	-------	2	20.32	17.78	12.25	7.00	2.96
87914-1632	-------	-------	-------	-------	16	-------	2	20.32	17.78	13.38	6.09	5.00
87914-1613	-------	-------	-------	-------	16	-------	3	20.32	17.78	10.92	5.84	2.79
87914-1623	-------	-------	-------	-------	16	-------	3	20.32	17.78	12.25	7.00	2.96
87914-1633	-------	-------	-------	-------	16	-------	3	20.32	17.78	13.38	6.09	5.00
87914-1614	-------	-------	-------	-------	16	-------	4	20.32	17.78	10.92	5.84	2.79
87914-1624	-------	-------	-------	-------	16	-------	4	20.32	17.78	12.25	7.00	2.96
87914-1634	-------	-------	-------	-------	16	-------	4	20.32	17.78	13.38	6.09	5.00
87914-1615	-------	-------	-------	-------	16	-------	5	20.32	17.78	10.92	5.84	2.79
87914-1625	-------	-------	-------	-------	16	-------	5	20.32	17.78	12.25	7.00	2.96
87914-1635	-------	-------	-------	-------	16	-------	5	20.32	17.78	13.38	6.09	5.00
87914-1616	-------	-------	-------	-------	16	-------	6	20.32	17.78	10.92	5.84	2.79
87914-1626	-------	-------	-------	-------	16	-------	6	20.32	17.78	12.25	7.00	2.96
87914-1636	-------	-------	-------	-------	16	-------	6	20.32	17.78	13.38	6.09	5.00

THIS DRAWING CONTAINS INFORMATION THAT IS PROPRIETARY TO MOLEX ELECTRONIC TECHNOLOGIES, LLC AND SHOULD NOT BE USED WITHOUT WRITTEN PERMISSION

MIGRATED TO NX

EC NO: 114031 2017/03/17
DRWN: FCSOO
CHK'D:
APPR: KHLIM 2017/05/09

D18 REV

GENERAL TOLERANCES (UNLESS SPECIFIED)

	MM	INCH
4 PLACES	±	±
3 PLACES	±	±
2 PLACES	± 0.2	±
1 PLACES	±	±
0 PLACES	±	±

ANGULAR TOL ± 3.0

DRAFT WHERE APPLICABLE MUST REMAIN WITHIN DIMENSIONS

DIMENSION UNITS: MM
SCALE: NTS

DRWN BY: KCHO DATE: 2004/11/05
CHK'D BY: PTLIM DATE: 2004/12/08
APPR BY: MLONG DATE: 2010/09/06

DRAWING SIZE: A3
THIRD ANGLE PROJECTION

molex®

2.54MM PITCH
DUAL ROW HEADER SINGLE WAFER, T/H

PRODUCT CUSTOMER DRAWING

SERIES	MATERIAL NUMBER	CUSTOMER
87914	SEE TABLE	GENERAL MARKET

DOCUMENT NUMBER	DOC TYPE	DOC PART	SHEET NUMBER
SD-87914-013	PSD	000	13 OF 45

RELEASE STATUS		RELEASE DATE	

FORMAT: Met-lega-master-tb-prod-A3
REVISION: C
DATE: 2016/02/04

PART NO FOR TRAY PACKAGING	PART NO. FOR TUBE WITHOUT CAP PACKAGING	PART NO. FOR TUBE WITH CAP PACKAGING	PART NO. FOR TAPE & REEL WITHOUT CAP PACKAGING	PART NO. FOR TAPE & REEL WITH CAP PACKAGING	CKT SIZE	VOID POSITION	PLATING TYPE	DIMENSION					
								A	B	F	M	P	G
87914-1811	-------	-------	-------	-------	18	-------	1	22.86	20.32	10.92	5.84	2.79	----
87914-1821	-------	-------	-------	-------	18	-------	1	22.86	20.32	12.25	7.00	2.96	----
87914-1831	-------	-------	-------	-------	18	-------	1	22.86	20.32	13.38	6.09	5.00	----
87914-1812	-------	-------	-------	-------	18	-------	2	22.86	20.32	10.92	5.84	2.79	----
87914-1822	-------	-------	-------	-------	18	-------	2	22.86	20.32	12.25	7.00	2.96	----
87914-1832	-------	-------	-------	-------	18	-------	2	22.86	20.32	13.38	6.09	5.00	----
87914-1813	-------	-------	-------	-------	18	-------	3	22.86	20.32	10.92	5.84	2.79	----
87914-1823	-------	-------	-------	-------	18	-------	3	22.86	20.32	12.25	7.00	2.96	----
87914-1833	-------	-------	-------	-------	18	-------	3	22.86	20.32	13.38	6.09	5.00	----
87914-1814	-------	-------	-------	-------	18	-------	4	22.86	20.32	10.92	5.84	2.79	----
87914-1824	-------	-------	-------	-------	18	-------	4	22.86	20.32	12.25	7.00	2.96	----
87914-1834	-------	-------	-------	-------	18	-------	4	22.86	20.32	13.38	6.09	5.00	----
87914-1815	-------	-------	-------	-------	18	-------	5	22.86	20.32	10.92	5.84	2.79	----
87914-1825	-------	-------	-------	-------	18	-------	5	22.86	20.32	12.25	7.00	2.96	----
87914-1835	-------	-------	-------	-------	18	-------	5	22.86	20.32	13.38	6.09	5.00	----
87914-1816	-------	-------	-------	-------	18	-------	6	22.86	20.32	10.92	5.84	2.79	----
87914-1826	-------	-------	-------	-------	18	-------	6	22.86	20.32	12.25	7.00	2.96	----
87914-1836	-------	-------	-------	-------	18	-------	6	22.86	20.32	13.38	6.09	5.00	----

THIS DRAWING CONTAINS INFORMATION THAT IS PROPRIETARY TO MOLEX ELECTRONIC TECHNOLOGIES, LLC AND SHOULD NOT BE USED WITHOUT WRITTEN PERMISSION

MIGRATED TO NX

EC NO: 114031 2017/03/17
DRWN: FCSOO
CHK'D:
APPR: KHLIM 2017/05/09

D18 REV

GENERAL TOLERANCES (UNLESS SPECIFIED)

	MM	INCH
4 PLACES	±	±
3 PLACES	±	±
2 PLACES	± 0.2	±
1 PLACES	±	±
0 PLACES	±	±

ANGULAR TOL ± 3.0

DRAFT WHERE APPLICABLE MUST REMAIN WITHIN DIMENSIONS

DIMENSION UNITS: MM
SCALE: NTS

DRWN BY: KCHO DATE: 2004/11/05
CHK'D BY: PTLIM DATE: 2004/12/08
APPR BY: MLONG DATE: 2010/09/06

DRAWING SIZE: A3
THIRD ANGLE PROJECTION

molex®

2.54MM PITCH
DUAL ROW HEADER SINGLE WAFER, T/H

PRODUCT CUSTOMER DRAWING

SERIES	MATERIAL NUMBER	CUSTOMER
87914	SEE TABLE	GENERAL MARKET

DOCUMENT NUMBER	DOC TYPE	DOC PART	SHEET NUMBER
SD-87914-013	PSD	000	14 OF 45

RELEASE STATUS | RELEASE DATE

FORMAT: Met-lega-master-tb-prod-A3
REVISION: C
DATE: 2016/02/04

PART NO FOR TRAY PACKAGING	PART NO. FOR TUBE WITHOUT CAP PACKAGING	PART NO. FOR TUBE WITH CAP PACKAGING	PART NO. FOR TAPE & REEL WITHOUT CAP PACKAGING	PART NO. FOR TAPE & REEL WITH CAP PACKAGING	CKT SIZE	VOID POSITION	PLATING TYPE	DIMENSION				
								A	B	F	M	P
87914-2011	-------	-------	-------	-------	20	-------	1	25.40	22.86	10.92	5.84	2.79
87914-2021	-------	-------	-------	-------	20	-------	1	25.40	22.86	12.25	7.00	2.96
87914-2031	-------	-------	-------	-------	20	-------	1	25.40	22.86	13.38	6.09	5.00
87914-2012	-------	-------	-------	-------	20	-------	2	25.40	22.86	10.92	5.84	2.79
87914-2022	-------	-------	-------	-------	20	-------	2	25.40	22.86	12.25	7.00	2.96
87914-2032	-------	-------	-------	-------	20	-------	2	25.40	22.86	13.38	6.09	5.00
87914-2013	-------	-------	-------	-------	20	-------	3	25.40	22.86	10.92	5.84	2.79
87914-2023	-------	-------	-------	-------	20	-------	3	25.40	22.86	12.25	7.00	2.96
87914-2033	-------	-------	-------	-------	20	-------	3	25.40	22.86	13.38	6.09	5.00
87914-2014	-------	-------	-------	-------	20	-------	4	25.40	22.86	10.92	5.84	2.79
87914-2024	-------	-------	-------	-------	20	-------	4	25.40	22.86	12.25	7.00	2.96
87914-2034	-------	-------	-------	-------	20	-------	4	25.40	22.86	13.38	6.09	5.00
87914-2015	-------	-------	-------	-------	20	-------	5	25.40	22.86	10.92	5.84	2.79
87914-2025	-------	-------	-------	-------	20	-------	5	25.40	22.86	12.25	7.00	2.96
87914-2035	-------	-------	-------	-------	20	-------	5	25.40	22.86	13.38	6.09	5.00
87914-2016	-------	-------	-------	-------	20	-------	6	25.40	22.86	10.92	5.84	2.79
87914-2026	-------	-------	-------	-------	20	-------	6	25.40	22.86	12.25	7.00	2.96
87914-2036	-------	-------	-------	-------	20	-------	6	25.40	22.86	13.38	6.09	5.00

THIS DRAWING CONTAINS INFORMATION THAT IS PROPRIETARY TO MOLEX ELECTRONIC TECHNOLOGIES, LLC AND SHOULD NOT BE USED WITHOUT WRITTEN PERMISSION

MIGRATED TO NX

EC NO: 114031 2017/03/17
DRWN: FCSOO
CHK'D:
APPR: KHLIM 2017/05/09

D18 REV

GENERAL TOLERANCES (UNLESS SPECIFIED)

	MM	INCH
4 PLACES	±	±
3 PLACES	±	±
2 PLACES	± 0.2	±
1 PLACES	±	±
0 PLACES	±	±

ANGULAR TOL ± 3.0

DRAFT WHERE APPLICABLE MUST REMAIN WITHIN DIMENSIONS

DIMENSION UNITS: MM
SCALE: NTS

DRWN BY: KCHO DATE: 2004/11/05
CHK'D BY: PTLIM DATE: 2004/12/08
APPR BY: MLONG DATE: 2010/09/06

DRAWING SIZE: A3
THIRD ANGLE PROJECTION

molex®

2.54MM PITCH
DUAL ROW HEADER SINGLE WAFER, T/H

PRODUCT CUSTOMER DRAWING

SERIES	MATERIAL NUMBER	CUSTOMER
87914	SEE TABLE	GENERAL MARKET

DOCUMENT NUMBER	DOC TYPE	DOC PART	SHEET NUMBER
SD-87914-013	PSD	000	15 OF 45

RELEASE STATUS		RELEASE DATE	

FORMAT: Met-lega-master-tb-prod-A3
REVISION: C
DATE: 2016/02/04

PART NO FOR TRAY PACKAGING	PART NO. FOR TUBE WITHOUT CAP PACKAGING	PART NO. FOR TUBE WITH CAP PACKAGING	PART NO. FOR TAPE & REEL WITHOUT CAP PACKAGING	PART NO. FOR TAPE & REEL WITH CAP PACKAGING	CKT SIZE	VOID POSITION	PLATING TYPE	DIMENSION				
								A	B	F	M	P
87914-2211	-------	-------	-------	-------	22	-------	1	27.94	25.40	10.92	5.84	2.79
87914-2221	-------	-------	-------	-------	22	-------	1	27.94	25.40	12.25	7.00	2.96
87914-2231	-------	-------	-------	-------	22	-------	1	27.94	25.40	13.38	6.09	5.00
87914-2212	-------	-------	-------	-------	22	-------	2	27.94	25.40	10.92	5.84	2.79
87914-2222	-------	-------	-------	-------	22	-------	2	27.94	25.40	12.25	7.00	2.96
87914-2232	-------	-------	-------	-------	22	-------	2	27.94	25.40	13.38	6.09	5.00
87914-2213	-------	-------	-------	-------	22	-------	3	27.94	25.40	10.92	5.84	2.79
87914-2223	-------	-------	-------	-------	22	-------	3	27.94	25.40	12.25	7.00	2.96
87914-2233	-------	-------	-------	-------	22	-------	3	27.94	25.40	13.38	6.09	5.00
87914-2214	-------	-------	-------	-------	22	-------	4	27.94	25.40	10.92	5.84	2.79
87914-2224	-------	-------	-------	-------	22	-------	4	27.94	25.40	12.25	7.00	2.96
87914-2234	-------	-------	-------	-------	22	-------	4	27.94	25.40	13.38	6.09	5.00
87914-2215	-------	-------	-------	-------	22	-------	5	27.94	25.40	10.92	5.84	2.79
87914-2225	-------	-------	-------	-------	22	-------	5	27.94	25.40	12.25	7.00	2.96
87914-2235	-------	-------	-------	-------	22	-------	5	27.94	25.40	13.38	6.09	5.00
87914-2216	-------	-------	-------	-------	22	-------	6	27.94	25.40	10.92	5.84	2.79
87914-2226	-------	-------	-------	-------	22	-------	6	27.94	25.40	12.25	7.00	2.96
87914-2236	-------	-------	-------	-------	22	-------	6	27.94	25.40	13.38	6.09	5.00

THIS DRAWING CONTAINS INFORMATION THAT IS PROPRIETARY TO MOLEX ELECTRONIC TECHNOLOGIES, LLC AND SHOULD NOT BE USED WITHOUT WRITTEN PERMISSION

MIGRATED TO NX

EC NO: 114031 2017/03/17
DRWN: FCSOO
CHK'D:
APPR: KHLIM 2017/05/09

D18 REV

GENERAL TOLERANCES (UNLESS SPECIFIED)

	MM	INCH
4 PLACES	±	±
3 PLACES	±	±
2 PLACES	± 0.2	±
1 PLACES	±	±
0 PLACES	±	±

ANGULAR TOL ± 3.0

DRAFT WHERE APPLICABLE MUST REMAIN WITHIN DIMENSIONS

DIMENSION UNITS: MM
SCALE: NTS

DRWN BY: KCHO DATE: 2004/11/05
CHK'D BY: PTLIM DATE: 2004/12/08
APPR BY: MLONG DATE: 2010/09/06

DRAWING SIZE: A3
THIRD ANGLE PROJECTION

molex®

2.54MM PITCH
DUAL ROW HEADER SINGLE WAFER, T/H

PRODUCT CUSTOMER DRAWING

SERIES	MATERIAL NUMBER	CUSTOMER
87914	SEE TABLE	GENERAL MARKET

DOCUMENT NUMBER	DOC TYPE	DOC PART	SHEET NUMBER
SD-87914-013	PSD	000	16 OF 45

RELEASE STATUS		RELEASE DATE	

FORMAT: Met-lega-master-tb-prod-A3
REVISION: C
DATE: 2016/02/04

PART NO FOR TRAY PACKAGING	PART NO. FOR TUBE WITHOUT CAP PACKAGING	PART NO. FOR TUBE WITH CAP PACKAGING	PART NO. FOR TAPE & REEL WITHOUT CAP PACKAGING	PART NO. FOR TAPE & REEL WITH CAP PACKAGING	CKT SIZE	VOID POSITION	PLATING TYPE	DIMENSION				
								A	B	F	M	P
87914-2411	-------	-------	-------	-------	24	-------	1	30.48	27.94	10.92	5.84	2.79
87914-2421	-------	-------	-------	-------	24	-------	1	30.48	27.94	12.25	7.00	2.96
87914-2431	-------	-------	-------	-------	24	-------	1	30.48	27.94	13.38	6.09	5.00
87914-2412	-------	-------	-------	-------	24	-------	2	30.48	27.94	10.92	5.84	2.79
87914-2422	-------	-------	-------	-------	24	-------	2	30.48	27.94	12.25	7.00	2.96
87914-2432	-------	-------	-------	-------	24	-------	2	30.48	27.94	13.38	6.09	5.00
87914-2413	-------	-------	-------	-------	24	-------	3	30.48	27.94	10.92	5.84	2.79
87914-2423	-------	-------	-------	-------	24	-------	3	30.48	27.94	12.25	7.00	2.96
87914-2433	-------	-------	-------	-------	24	-------	3	30.48	27.94	13.38	6.09	5.00
87914-2414	-------	-------	-------	-------	24	-------	4	30.48	27.94	10.92	5.84	2.79
87914-2424	-------	-------	-------	-------	24	-------	4	30.48	27.94	12.25	7.00	2.96
87914-2434	-------	-------	-------	-------	24	-------	4	30.48	27.94	13.38	6.09	5.00
87914-2415	-------	-------	-------	-------	24	-------	5	30.48	27.94	10.92	5.84	2.79
87914-2425	-------	-------	-------	-------	24	-------	5	30.48	27.94	12.25	7.00	2.96
87914-2435	-------	-------	-------	-------	24	-------	5	30.48	27.94	13.38	6.09	5.00
87914-2416	-------	-------	-------	-------	24	-------	6	30.48	27.94	10.92	5.84	2.79
87914-2426	-------	-------	-------	-------	24	-------	6	30.48	27.94	12.25	7.00	2.96
87914-2436	-------	-------	-------	-------	24	-------	6	30.48	27.94	13.38	6.09	5.00

THIS DRAWING CONTAINS INFORMATION THAT IS PROPRIETARY TO MOLEX ELECTRONIC TECHNOLOGIES, LLC AND SHOULD NOT BE USED WITHOUT WRITTEN PERMISSION

MIGRATED TO NX

EC NO: 114031 2017/03/17
DRWN: FCSOO
CHK'D: 2017/05/09
APPR: KHLIM

D18 REV

GENERAL TOLERANCES (UNLESS SPECIFIED)

	MM	INCH
4 PLACES	±	±
3 PLACES	±	±
2 PLACES	± 0.2	±
1 PLACES	±	±
0 PLACES	±	±

ANGULAR TOL ± 3.0

DRAFT WHERE APPLICABLE MUST REMAIN WITHIN DIMENSIONS

DIMENSION UNITS: MM
SCALE: NTS

DRWN BY: KCHO DATE: 2004/11/05
CHK'D BY: PTLIM DATE: 2004/12/08
APPR BY: MLONG DATE: 2010/09/06

DRAWING SIZE: A3
THIRD ANGLE PROJECTION

molex®

2.54MM PITCH
DUAL ROW HEADER SINGLE WAFER, T/H

PRODUCT CUSTOMER DRAWING

SERIES	MATERIAL NUMBER	CUSTOMER
87914	SEE TABLE	GENERAL MARKET

DOCUMENT NUMBER	DOC TYPE	DOC PART	SHEET NUMBER
SD-87914-013	PSD	000	17 OF 45

RELEASE STATUS		RELEASE DATE	

FORMAT: Met-lega-master-tb-prod-A3
REVISION: C
DATE: 2016/02/04

PART NO FOR TRAY PACKAGING	PART NO. FOR TUBE WITHOUT CAP PACKAGING	PART NO. FOR TUBE WITH CAP PACKAGING	PART NO. FOR TAPE & REEL WITHOUT CAP PACKAGING	PART NO. FOR TAPE & REEL WITH CAP PACKAGING	CKT SIZE	VOID POSITION	PLATING TYPE	DIMENSION				
								A	B	F	M	P
87914-2611	-------	-------	-------	-------	26	-------	1	33.02	30.48	10.92	5.84	2.79
87914-2621	-------	-------	-------	-------	26	-------	1	33.02	30.48	12.25	7.00	2.96
87914-2631	-------	-------	-------	-------	26	-------	1	33.02	30.48	13.38	6.09	5.00
87914-2612	-------	-------	-------	-------	26	-------	2	33.02	30.48	10.92	5.84	2.79
87914-2622	-------	-------	-------	-------	26	-------	2	33.02	30.48	12.25	7.00	2.96
87914-2632	-------	-------	-------	-------	26	-------	2	33.02	30.48	13.38	6.09	5.00
87914-2613	-------	-------	-------	-------	26	-------	3	33.02	30.48	10.92	5.84	2.79
87914-2623	-------	-------	-------	-------	26	-------	3	33.02	30.48	12.25	7.00	2.96
87914-2633	-------	-------	-------	-------	26	-------	3	33.02	30.48	13.38	6.09	5.00
87914-2614	-------	-------	-------	-------	26	-------	4	33.02	30.48	10.92	5.84	2.79
87914-2624	-------	-------	-------	-------	26	-------	4	33.02	30.48	12.25	7.00	2.96
87914-2634	-------	-------	-------	-------	26	-------	4	33.02	30.48	13.38	6.09	5.00
87914-2615	-------	-------	-------	-------	26	-------	5	33.02	30.48	10.92	5.84	2.79
87914-2625	-------	-------	-------	-------	26	-------	5	33.02	30.48	12.25	7.00	2.96
87914-2635	-------	-------	-------	-------	26	-------	5	33.02	30.48	13.38	6.09	5.00
87914-2616	-------	-------	-------	-------	26	-------	6	33.02	30.48	10.92	5.84	2.79
87914-2626	-------	-------	-------	-------	26	-------	6	33.02	30.48	12.25	7.00	2.96
87914-2636	-------	-------	-------	-------	26	-------	6	33.02	30.48	13.38	6.09	5.00

THIS DRAWING CONTAINS INFORMATION THAT IS PROPRIETARY TO MOLEX ELECTRONIC TECHNOLOGIES, LLC AND SHOULD NOT BE USED WITHOUT WRITTEN PERMISSION

MIGRATED TO NX

EC NO: 114031 2017/03/17
DRWN: FCSOO
CHK'D: 2017/05/09
APPR: KHLIM

D18 REV

GENERAL TOLERANCES (UNLESS SPECIFIED)

	MM	INCH
4 PLACES	±	±
3 PLACES	±	±
2 PLACES	± 0.2	±
1 PLACES	±	±
0 PLACES	±	±

ANGULAR TOL ± 3.0

DRAFT WHERE APPLICABLE MUST REMAIN WITHIN DIMENSIONS

DIMENSION UNITS: MM
SCALE: NTS

DRWN BY: KCHO DATE: 2004/11/05
CHK'D BY: PTLIM DATE: 2004/12/08
APPR BY: MLONG DATE: 2010/09/06

DRAWING SIZE: A3
THIRD ANGLE PROJECTION

molex®

2.54MM PITCH
DUAL ROW HEADER SINGLE WAFER, T/H

PRODUCT CUSTOMER DRAWING

SERIES	MATERIAL NUMBER	CUSTOMER
87914	SEE TABLE	GENERAL MARKET

DOCUMENT NUMBER	DOC TYPE	DOC PART	SHEET NUMBER
SD-87914-013	PSD	000	18 OF 45

RELEASE STATUS | RELEASE DATE

FORMAT: Met-lega-master-tb-prod-A3
REVISION: C
DATE: 2016/02/04

PART NO FOR TRAY PACKAGING	PART NO. FOR TUBE WITHOUT CAP PACKAGING	PART NO. FOR TUBE WITH CAP PACKAGING	PART NO. FOR TAPE & REEL WITHOUT CAP PACKAGING	PART NO. FOR TAPE & REEL WITH CAP PACKAGING	CKT SIZE	VOID POSITION	PLATING TYPE	DIMENSION				
								A	B	F	M	P
87914-2811	-------	-------	-------	-------	28	-------	1	35.56	33.02	10.92	5.84	2.79
87914-2821	-------	-------	-------	-------	28	-------	1	35.56	33.02	12.25	7.00	2.96
87914-2831	-------	-------	-------	-------	28	-------	1	35.56	33.02	13.38	6.09	5.00
87914-2812	-------	-------	-------	-------	28	-------	2	35.56	33.02	10.92	5.84	2.79
87914-2822	-------	-------	-------	-------	28	-------	2	35.56	33.02	12.25	7.00	2.96
87914-2832	-------	-------	-------	-------	28	-------	2	35.56	33.02	13.38	6.09	5.00
87914-2813	-------	-------	-------	-------	28	-------	3	35.56	33.02	10.92	5.84	2.79
87914-2823	-------	-------	-------	-------	28	-------	3	35.56	33.02	12.25	7.00	2.96
87914-2833	-------	-------	-------	-------	28	-------	3	35.56	33.02	13.38	6.09	5.00
87914-2814	-------	-------	-------	-------	28	-------	4	35.56	33.02	10.92	5.84	2.79
87914-2824	-------	-------	-------	-------	28	-------	4	35.56	33.02	12.25	7.00	2.96
87914-2834	-------	-------	-------	-------	28	-------	4	35.56	33.02	13.38	6.09	5.00
87914-2815	-------	-------	-------	-------	28	-------	5	35.56	33.02	10.92	5.84	2.79
87914-2825	-------	-------	-------	-------	28	-------	5	35.56	33.02	12.25	7.00	2.96
87914-2835	-------	-------	-------	-------	28	-------	5	35.56	33.02	13.38	6.09	5.00
87914-2816	-------	-------	-------	-------	28	-------	6	35.56	33.02	10.92	5.84	2.79
87914-2826	-------	-------	-------	-------	28	-------	6	35.56	33.02	12.25	7.00	2.96
87914-2836	-------	-------	-------	-------	28	-------	6	35.56	33.02	13.38	6.09	5.00

THIS DRAWING CONTAINS INFORMATION THAT IS PROPRIETARY TO MOLEX ELECTRONIC TECHNOLOGIES, LLC AND SHOULD NOT BE USED WITHOUT WRITTEN PERMISSION

MIGRATED TO NX

EC NO: 114031 2017/03/17
DRWN: FCSOO
CHK'D: 2017/05/09
APPR: KHLIM

D18 REV

GENERAL TOLERANCES (UNLESS SPECIFIED)

	MM	INCH
4 PLACES	±	±
3 PLACES	±	±
2 PLACES	± 0.2	±
1 PLACES	±	±
0 PLACES	±	±

ANGULAR TOL ± 3.0

DRAFT WHERE APPLICABLE MUST REMAIN WITHIN DIMENSIONS

DIMENSION UNITS: MM
SCALE: NTS

DRWN BY: KCHO DATE: 2004/11/05
CHK'D BY: PTLIM DATE: 2004/12/08
APPR BY: MLONG DATE: 2010/09/06

DRAWING SIZE: A3
THIRD ANGLE PROJECTION

molex®

2.54MM PITCH
DUAL ROW HEADER SINGLE WAFER, T/H

PRODUCT CUSTOMER DRAWING

SERIES: 87914
MATERIAL NUMBER: SEE TABLE
CUSTOMER: GENERAL MARKET

DOCUMENT NUMBER: SD-87914-013
DOC TYPE: PSD
DOC PART: 000
SHEET NUMBER: 19 OF 45

RELEASE STATUS
RELEASE DATE

FORMAT: Met-lega-master-tb-prod-A3
REVISION: C
DATE: 2016/02/04

PART NO FOR TRAY PACKAGING	PART NO. FOR TUBE WITHOUT CAP PACKAGING	PART NO. FOR TUBE WITH CAP PACKAGING	PART NO. FOR TAPE & REEL WITHOUT CAP PACKAGING	PART NO. FOR TAPE & REEL WITH CAP PACKAGING	CKT SIZE	VOID POSITION	PLATING TYPE	DIMENSION				
								A	B	F	M	P
87914-3011	-------	-------	-------	-------	30	-------	1	38.10	35.56	10.92	5.84	2.79
87914-3021	-------	-------	-------	-------	30	-------	1	38.10	35.56	12.25	7.00	2.96
87914-3031	-------	-------	-------	-------	30	-------	1	38.10	35.56	13.38	6.09	5.00
87914-3012	-------	-------	-------	-------	30	-------	2	38.10	35.56	10.92	5.84	2.79
87914-3022	-------	-------	-------	-------	30	-------	2	38.10	35.56	12.25	7.00	2.96
87914-3032	-------	-------	-------	-------	30	-------	2	38.10	35.56	13.38	6.09	5.00
87914-3013	-------	-------	-------	-------	30	-------	3	38.10	35.56	10.92	5.84	2.79
87914-3023	-------	-------	-------	-------	30	-------	3	38.10	35.56	12.25	7.00	2.96
87914-3033	-------	-------	-------	-------	30	-------	3	38.10	35.56	13.38	6.09	5.00
87914-3014	-------	-------	-------	-------	30	-------	4	38.10	35.56	10.92	5.84	2.79
87914-3024	-------	-------	-------	-------	30	-------	4	38.10	35.56	12.25	7.00	2.96
87914-3034	-------	-------	-------	-------	30	-------	4	38.10	35.56	13.38	6.09	5.00
87914-3015	-------	-------	-------	-------	30	-------	5	38.10	35.56	10.92	5.84	2.79
87914-3025	-------	-------	-------	-------	30	-------	5	38.10	35.56	12.25	7.00	2.96
87914-3035	-------	-------	-------	-------	30	-------	5	38.10	35.56	13.38	6.09	5.00
87914-3016	-------	-------	-------	-------	30	-------	6	38.10	35.56	10.92	5.84	2.79
87914-3026	-------	-------	-------	-------	30	-------	6	38.10	35.56	12.25	7.00	2.96
87914-3036	-------	-------	-------	-------	30	-------	6	38.10	35.56	13.38	6.09	5.00

THIS DRAWING CONTAINS INFORMATION THAT IS PROPRIETARY TO MOLEX ELECTRONIC TECHNOLOGIES, LLC AND SHOULD NOT BE USED WITHOUT WRITTEN PERMISSION

MIGRATED TO NX

EC NO: 114031 2017/03/17
DRWN: FCSOO
CHK'D: KHLIM 2017/05/09
APPR:

D18 REV

GENERAL TOLERANCES (UNLESS SPECIFIED)

	MM	INCH
4 PLACES	±	±
3 PLACES	±	±
2 PLACES	± 0.2	±
1 PLACES	±	±
0 PLACES	±	±

ANGULAR TOL ± 3.0

DRAFT WHERE APPLICABLE MUST REMAIN WITHIN DIMENSIONS

DIMENSION UNITS: MM
SCALE: NTS

DRWN BY: KCHO DATE: 2004/11/05
CHK'D BY: PTLIM DATE: 2004/12/08
APPR BY: MLONG DATE: 2010/09/06

DRAWING SIZE: A3
THIRD ANGLE PROJECTION

molex®

2.54MM PITCH
DUAL ROW HEADER SINGLE WAFER, T/H

PRODUCT CUSTOMER DRAWING

SERIES	MATERIAL NUMBER	CUSTOMER
87914	SEE TABLE	GENERAL MARKET

DOCUMENT NUMBER	DOC TYPE	DOC PART	SHEET NUMBER
SD-87914-013	PSD	000	20 OF 45

RELEASE STATUS		RELEASE DATE	

FORMAT: Met-lega-master-tb-prod-A3
REVISION: C
DATE: 2016/02/04

PART NO FOR TRAY PACKAGING	PART NO. FOR TUBE WITHOUT CAP PACKAGING	PART NO. FOR TUBE WITH CAP PACKAGING	PART NO. FOR TAPE & REEL WITHOUT CAP PACKAGING	PART NO. FOR TAPE & REEL WITH CAP PACKAGING	CKT SIZE	VOID POSITION	PLATING TYPE	DIMENSION				
								A	B	F	M	P
87914-3211	-------	-------	-------	-------	32	-------	1	40.64	38.10	10.92	5.84	2.79
87914-3221	-------	-------	-------	-------	32	-------	1	40.64	38.10	12.25	7.00	2.96
87914-3231	-------	-------	-------	-------	32	-------	1	40.64	38.10	13.38	6.09	5.00
87914-3212	-------	-------	-------	-------	32	-------	2	40.64	38.10	10.92	5.84	2.79
87914-3222	-------	-------	-------	-------	32	-------	2	40.64	38.10	12.25	7.00	2.96
87914-3232	-------	-------	-------	-------	32	-------	2	40.64	38.10	13.38	6.09	5.00
87914-3213	-------	-------	-------	-------	32	-------	3	40.64	38.10	10.92	5.84	2.79
87914-3223	-------	-------	-------	-------	32	-------	3	40.64	38.10	12.25	7.00	2.96
87914-3233	-------	-------	-------	-------	32	-------	3	40.64	38.10	13.38	6.09	5.00
87914-3214	-------	-------	-------	-------	32	-------	4	40.64	38.10	10.92	5.84	2.79
87914-3224	-------	-------	-------	-------	32	-------	4	40.64	38.10	12.25	7.00	2.96
87914-3234	-------	-------	-------	-------	32	-------	4	40.64	38.10	13.38	6.09	5.00
87914-3215	-------	-------	-------	-------	32	-------	5	40.64	38.10	10.92	5.84	2.79
87914-3225	-------	-------	-------	-------	32	-------	5	40.64	38.10	12.25	7.00	2.96
87914-3235	-------	-------	-------	-------	32	-------	5	40.64	38.10	13.38	6.09	5.00
87914-3216	-------	-------	-------	-------	32	-------	6	40.64	38.10	10.92	5.84	2.79
87914-3226	-------	-------	-------	-------	32	-------	6	40.64	38.10	12.25	7.00	2.96
87914-3236	-------	-------	-------	-------	32	-------	6	40.64	38.10	13.38	6.09	5.00

THIS DRAWING CONTAINS INFORMATION THAT IS PROPRIETARY TO MOLEX ELECTRONIC TECHNOLOGIES, LLC AND SHOULD NOT BE USED WITHOUT WRITTEN PERMISSION

MIGRATED TO NX

EC NO: 114031 2017/03/17
DRWN: FCSOO
CHK'D: KHLIM 2017/05/09
APPR:

D18 REV

GENERAL TOLERANCES (UNLESS SPECIFIED)

	MM	INCH
4 PLACES	±	±
3 PLACES	±	±
2 PLACES	± 0.2	±
1 PLACES	±	±
0 PLACES	±	±

ANGULAR TOL ± 3.0

DRAFT WHERE APPLICABLE MUST REMAIN WITHIN DIMENSIONS

DIMENSION UNITS: MM
SCALE: NTS

DRWN BY: KCHO DATE: 2004/11/05
CHK'D BY: PTLIM DATE: 2004/12/08
APPR BY: MLONG DATE: 2010/09/06

DRAWING SIZE: A3
THIRD ANGLE PROJECTION

molex®

2.54MM PITCH
DUAL ROW HEADER SINGLE WAFER, T/H

PRODUCT CUSTOMER DRAWING

SERIES	MATERIAL NUMBER	CUSTOMER
87914	SEE TABLE	GENERAL MARKET

DOCUMENT NUMBER	DOC TYPE	DOC PART	SHEET NUMBER
SD-87914-013	PSD	000	21 OF 45

RELEASE STATUS		RELEASE DATE	

FORMAT: Met-lega-master-tb-prod-A3
REVISION: C
DATE: 2016/02/04

PART NO FOR TRAY PACKAGING	PART NO. FOR TUBE WITHOUT CAP PACKAGING	PART NO. FOR TUBE WITH CAP PACKAGING	PART NO. FOR TAPE & REEL WITHOUT CAP PACKAGING	PART NO. FOR TAPE & REEL WITH CAP PACKAGING	CKT SIZE	VOID POSITION	PLATING TYPE	DIMENSION				
								A	B	F	M	P
87914-3411	-------	-------	-------	-------	34	-------	1	43.18	40.64	10.92	5.84	2.79
87914-3421	-------	-------	-------	-------	34	-------	1	43.18	40.64	12.25	7.00	2.96
87914-3431	-------	-------	-------	-------	34	-------	1	43.18	40.64	13.38	6.09	5.00
87914-3412	-------	-------	-------	-------	34	-------	2	43.18	40.64	10.92	5.84	2.79
87914-3422	-------	-------	-------	-------	34	-------	2	43.18	40.64	12.25	7.00	2.96
87914-3432	-------	-------	-------	-------	34	-------	2	43.18	40.64	13.38	6.09	5.00
87914-3413	-------	-------	-------	-------	34	-------	3	43.18	40.64	10.92	5.84	2.79
87914-3423	-------	-------	-------	-------	34	-------	3	43.18	40.64	12.25	7.00	2.96
87914-3433	-------	-------	-------	-------	34	-------	3	43.18	40.64	13.38	6.09	5.00
87914-3414	-------	-------	-------	-------	34	-------	4	43.18	40.64	10.92	5.84	2.79
87914-3424	-------	-------	-------	-------	34	-------	4	43.18	40.64	12.25	7.00	2.96
87914-3434	-------	-------	-------	-------	34	-------	4	43.18	40.64	13.38	6.09	5.00
87914-3415	-------	-------	-------	-------	34	-------	5	43.18	40.64	10.92	5.84	2.79
87914-3425	-------	-------	-------	-------	34	-------	5	43.18	40.64	12.25	7.00	2.96
87914-3435	-------	-------	-------	-------	34	-------	5	43.18	40.64	13.38	6.09	5.00
87914-3416	-------	-------	-------	-------	34	-------	6	43.18	40.64	10.92	5.84	2.79
87914-3426	-------	-------	-------	-------	34	-------	6	43.18	40.64	12.25	7.00	2.96
87914-3436	-------	-------	-------	-------	34	-------	6	43.18	40.64	13.38	6.09	5.00

THIS DRAWING CONTAINS INFORMATION THAT IS PROPRIETARY TO MOLEX ELECTRONIC TECHNOLOGIES, LLC AND SHOULD NOT BE USED WITHOUT WRITTEN PERMISSION

MIGRATED TO NX

EC NO: 114031 2017/03/17
DRWN: FCSOO
CHK'D: 2017/05/09
APPR: KHLIM

D18 REV

GENERAL TOLERANCES (UNLESS SPECIFIED)

	MM	INCH
4 PLACES	±	±
3 PLACES	±	±
2 PLACES	± 0.2	±
1 PLACES	±	±
0 PLACES	±	±

ANGULAR TOL ± 3.0

DRAFT WHERE APPLICABLE MUST REMAIN WITHIN DIMENSIONS

DIMENSION UNITS: MM
SCALE: NTS

DRWN BY: KCHO DATE: 2004/11/05
CHK'D BY: PTLIM DATE: 2004/12/08
APPR BY: MLONG DATE: 2010/09/06

DRAWING SIZE: A3
THIRD ANGLE PROJECTION

molex®

2.54MM PITCH
DUAL ROW HEADER SINGLE WAFER, T/H

PRODUCT CUSTOMER DRAWING

SERIES: 87914
MATERIAL NUMBER: SEE TABLE
CUSTOMER: GENERAL MARKET

DOCUMENT NUMBER: SD-87914-013
DOC TYPE: PSD
DOC PART: 000
SHEET NUMBER: 22 OF 45

RELEASE STATUS
RELEASE DATE

FORMAT: Met-lega-master-tb-prod-A3
REVISION: C
DATE: 2016/02/04

PART NO FOR TRAY PACKAGING	PART NO. FOR TUBE WITHOUT CAP PACKAGING	PART NO. FOR TUBE WITH CAP PACKAGING	PART NO. FOR TAPE & REEL WITHOUT CAP PACKAGING	PART NO. FOR TAPE & REEL WITH CAP PACKAGING	CKT SIZE	VOID POSITION	PLATING TYPE	DIMENSION				
								A	B	F	M	P
87914-3611	-------	-------	-------	-------	36	-------	1	45.72	43.18	10.92	5.84	2.79
87914-3621	-------	-------	-------	-------	36	-------	1	45.72	43.18	12.25	7.00	2.96
87914-3631	-------	-------	-------	-------	36	-------	1	45.72	43.18	13.38	6.09	5.00
87914-3612	-------	-------	-------	-------	36	-------	2	45.72	43.18	10.92	5.84	2.79
87914-3622	-------	-------	-------	-------	36	-------	2	45.72	43.18	12.25	7.00	2.96
87914-3632	-------	-------	-------	-------	36	-------	2	45.72	43.18	13.38	6.09	5.00
87914-3613	-------	-------	-------	-------	36	-------	3	45.72	43.18	10.92	5.84	2.79
87914-3623	-------	-------	-------	-------	36	-------	3	45.72	43.18	12.25	7.00	2.96
87914-3633	-------	-------	-------	-------	36	-------	3	45.72	43.18	13.38	6.09	5.00
87914-3614	-------	-------	-------	-------	36	-------	4	45.72	43.18	10.92	5.84	2.79
87914-3624	-------	-------	-------	-------	36	-------	4	45.72	43.18	12.25	7.00	2.96
87914-3634	-------	-------	-------	-------	36	-------	4	45.72	43.18	13.38	6.09	5.00
87914-3615	-------	-------	-------	-------	36	-------	5	45.72	43.18	10.92	5.84	2.79
87914-3625	-------	-------	-------	-------	36	-------	5	45.72	43.18	12.25	7.00	2.96
87914-3635	-------	-------	-------	-------	36	-------	5	45.72	43.18	13.38	6.09	5.00
87914-3616	-------	-------	-------	-------	36	-------	6	45.72	43.18	10.92	5.84	2.79
87914-3626	-------	-------	-------	-------	36	-------	6	45.72	43.18	12.25	7.00	2.96
87914-3636	-------	-------	-------	-------	36	-------	6	45.72	43.18	13.38	6.09	5.00

THIS DRAWING CONTAINS INFORMATION THAT IS PROPRIETARY TO MOLEX ELECTRONIC TECHNOLOGIES, LLC AND SHOULD NOT BE USED WITHOUT WRITTEN PERMISSION

MIGRATED TO NX

EC NO: 114031 2017/03/17
DRWN: FCSOO
CHK'D: 2017/05/09
APPR: KHLIM

D18 REV

GENERAL TOLERANCES (UNLESS SPECIFIED)

	MM	INCH
4 PLACES	±	±
3 PLACES	±	±
2 PLACES	± 0.2	±
1 PLACES	±	±
0 PLACES	±	±

ANGULAR TOL ± 3.0

DRAFT WHERE APPLICABLE MUST REMAIN WITHIN DIMENSIONS

DIMENSION UNITS: MM
SCALE: NTS

DRWN BY: KCHO DATE: 2004/11/05
CHK'D BY: PTLIM DATE: 2004/12/08
APPR BY: MLONG DATE: 2010/09/06

DRAWING SIZE: A3
THIRD ANGLE PROJECTION

molex®

2.54MM PITCH
DUAL ROW HEADER SINGLE WAFER, T/H

PRODUCT CUSTOMER DRAWING

SERIES	MATERIAL NUMBER	CUSTOMER
87914	SEE TABLE	GENERAL MARKET

DOCUMENT NUMBER	DOC TYPE	DOC PART	SHEET NUMBER
SD-87914-013	PSD	000	23 OF 45

RELEASE STATUS		RELEASE DATE	

FORMAT: Met-lega-master-tb-prod-A3
REVISION: C
DATE: 2016/02/04

PART NO FOR TRAY PACKAGING	PART NO. FOR TUBE WITHOUT CAP PACKAGING	PART NO. FOR TUBE WITH CAP PACKAGING	PART NO. FOR TAPE & REEL WITHOUT CAP PACKAGING	PART NO. FOR TAPE & REEL WITH CAP PACKAGING	CKT SIZE	VOID POSITION	PLATING TYPE	DIMENSION				
								A	B	F	M	P
87914-3811	-------	-------	-------	-------	38	-------	1	48.26	45.72	10.92	5.84	2.79
87914-3821	-------	-------	-------	-------	38	-------	1	48.26	45.72	12.25	7.00	2.96
87914-3831	-------	-------	-------	-------	38	-------	1	48.26	45.72	13.38	6.09	5.00
87914-3812	-------	-------	-------	-------	38	-------	2	48.26	45.72	10.92	5.84	2.79
87914-3822	-------	-------	-------	-------	38	-------	2	48.26	45.72	12.25	7.00	2.96
87914-3832	-------	-------	-------	-------	38	-------	2	48.26	45.72	13.38	6.09	5.00
87914-3813	-------	-------	-------	-------	38	-------	3	48.26	45.72	10.92	5.84	2.79
87914-3823	-------	-------	-------	-------	38	-------	3	48.26	45.72	12.25	7.00	2.96
87914-3833	-------	-------	-------	-------	38	-------	3	48.26	45.72	13.38	6.09	5.00
87914-3814	-------	-------	-------	-------	38	-------	4	48.26	45.72	10.92	5.84	2.79
87914-3824	-------	-------	-------	-------	38	-------	4	48.26	45.72	12.25	7.00	2.96
87914-3834	-------	-------	-------	-------	38	-------	4	48.26	45.72	13.38	6.09	5.00
87914-3815	-------	-------	-------	-------	38	-------	5	48.26	45.72	10.92	5.84	2.79
87914-3825	-------	-------	-------	-------	38	-------	5	48.26	45.72	12.25	7.00	2.96
87914-3835	-------	-------	-------	-------	38	-------	5	48.26	45.72	13.38	6.09	5.00
87914-3816	-------	-------	-------	-------	38	-------	6	48.26	45.72	10.92	5.84	2.79
87914-3826	-------	-------	-------	-------	38	-------	6	48.26	45.72	12.25	7.00	2.96
87914-3836	-------	-------	-------	-------	38	-------	6	48.26	45.72	13.38	6.09	5.00

THIS DRAWING CONTAINS INFORMATION THAT IS PROPRIETARY TO MOLEX ELECTRONIC TECHNOLOGIES, LLC AND SHOULD NOT BE USED WITHOUT WRITTEN PERMISSION

MIGRATED TO NX

EC NO: 114031 2017/03/17
DRWN: FCSOO
CHK'D: 2017/05/09
APPR: KHLIM

D18 REV

GENERAL TOLERANCES (UNLESS SPECIFIED)

	MM	INCH
4 PLACES	±	±
3 PLACES	±	±
2 PLACES	± 0.2	±
1 PLACES	±	±
0 PLACES	±	±

ANGULAR TOL ± 3.0

DRAFT WHERE APPLICABLE MUST REMAIN WITHIN DIMENSIONS

DIMENSION UNITS: MM
SCALE: NTS

DRWN BY: KCHO DATE: 2004/11/05
CHK'D BY: PTLIM DATE: 2004/12/08
APPR BY: MLONG DATE: 2010/09/06

DRAWING SIZE: A3
THIRD ANGLE PROJECTION

molex®

2.54MM PITCH
DUAL ROW HEADER SINGLE WAFER, T/H

PRODUCT CUSTOMER DRAWING

SERIES	MATERIAL NUMBER	CUSTOMER
87914	SEE TABLE	GENERAL MARKET

DOCUMENT NUMBER	DOC TYPE	DOC PART	SHEET NUMBER
SD-87914-013	PSD	000	24 OF 45

RELEASE STATUS		RELEASE DATE	

FORMAT: Met-lega-master-tb-prod-A3
REVISION: C
DATE: 2016/02/04

PART NO FOR TRAY PACKAGING	PART NO. FOR TUBE WITHOUT CAP PACKAGING	PART NO. FOR TUBE WITH CAP PACKAGING	PART NO. FOR TAPE & REEL WITHOUT CAP PACKAGING	PART NO. FOR TAPE & REEL WITH CAP PACKAGING	CKT SIZE	VOID POSITION	PLATING TYPE	DIMENSION				
								A	B	F	M	P
87914-4011	-------	-------	-------	-------	40	-------	1	50.80	48.26	10.92	5.84	2.79
87914-4021	-------	-------	-------	-------	40	-------	1	50.80	48.26	12.25	7.00	2.96
87914-4031	-------	-------	-------	-------	40	-------	1	50.80	48.26	13.38	6.09	5.00
87914-4012	-------	-------	-------	-------	40	-------	2	50.80	48.26	10.92	5.84	2.79
87914-4022	-------	-------	-------	-------	40	-------	2	50.80	48.26	12.25	7.00	2.96
87914-4032	-------	-------	-------	-------	40	-------	2	50.80	48.26	13.38	6.09	5.00
87914-4013	-------	-------	-------	-------	40	-------	3	50.80	48.26	10.92	5.84	2.79
87914-4023	-------	-------	-------	-------	40	-------	3	50.80	48.26	12.25	7.00	2.96
87914-4033	-------	-------	-------	-------	40	-------	3	50.80	48.26	13.38	6.09	5.00
87914-4014	-------	-------	-------	-------	40	-------	4	50.80	48.26	10.92	5.84	2.79
87914-4024	-------	-------	-------	-------	40	-------	4	50.80	48.26	12.25	7.00	2.96
87914-4034	-------	-------	-------	-------	40	-------	4	50.80	48.26	13.38	6.09	5.00
87914-4015	-------	-------	-------	-------	40	-------	5	50.80	48.26	10.92	5.84	2.79
87914-4025	-------	-------	-------	-------	40	-------	5	50.80	48.26	12.25	7.00	2.96
87914-4035	-------	-------	-------	-------	40	-------	5	50.80	48.26	13.38	6.09	5.00
87914-4016	-------	-------	-------	-------	40	-------	6	50.80	48.26	10.92	5.84	2.79
87914-4026	-------	-------	-------	-------	40	-------	6	50.80	48.26	12.25	7.00	2.96
87914-4036	-------	-------	-------	-------	40	-------	6	50.80	48.26	13.38	6.09	5.00

THIS DRAWING CONTAINS INFORMATION THAT IS PROPRIETARY TO MOLEX ELECTRONIC TECHNOLOGIES, LLC AND SHOULD NOT BE USED WITHOUT WRITTEN PERMISSION

MIGRATED TO NX

EC NO: 114031 2017/03/17
DRWN: FCSOO
CHK'D: 2017/05/09
APPR: KHLIM

D18 REV

GENERAL TOLERANCES (UNLESS SPECIFIED)

	MM	INCH
4 PLACES	±	±
3 PLACES	±	±
2 PLACES	± 0.2	±
1 PLACES	±	±
0 PLACES	±	±

ANGULAR TOL ± 3.0

DRAFT WHERE APPLICABLE MUST REMAIN WITHIN DIMENSIONS

DIMENSION UNITS: MM
SCALE: NTS

DRWN BY: KCHO DATE: 2004/11/05
CHK'D BY: PTLIM DATE: 2004/12/08
APPR BY: MLONG DATE: 2010/09/06

DRAWING SIZE: A3
THIRD ANGLE PROJECTION

molex®

2.54MM PITCH
DUAL ROW HEADER SINGLE WAFER, T/H

PRODUCT CUSTOMER DRAWING

SERIES	MATERIAL NUMBER	CUSTOMER
87914	SEE TABLE	GENERAL MARKET

DOCUMENT NUMBER	DOC TYPE	DOC PART	SHEET NUMBER
SD-87914-013	PSD	000	25 OF 45

RELEASE STATUS		RELEASE DATE	

FORMAT: Met-lega-master-tb-prod-A3
REVISION: C
DATE: 2016/02/04

PART NO FOR TRAY PACKAGING	PART NO. FOR TUBE WITHOUT CAP PACKAGING	PART NO. FOR TUBE WITH CAP PACKAGING	PART NO. FOR TAPE & REEL WITHOUT CAP PACKAGING	PART NO. FOR TAPE & REEL WITH CAP PACKAGING	CKT SIZE	VOID POSITION	PLATING TYPE	DIMENSION				
								A	B	F	M	P
87914-4211	-------	-------	-------	-------	42	-------	1	53.34	50.80	10.92	5.84	2.79
87914-4221	-------	-------	-------	-------	42	-------	1	53.34	50.80	12.25	7.00	2.96
87914-4212	-------	-------	-------	-------	42	-------	2	53.34	50.80	10.92	5.84	2.79
87914-4222	-------	-------	-------	-------	42	-------	2	53.34	50.80	12.25	7.00	2.96
87914-4213	-------	-------	-------	-------	42	-------	3	53.34	50.80	10.92	5.84	2.79
87914-4223	-------	-------	-------	-------	42	-------	3	53.34	50.80	12.25	7.00	2.96
87914-4214	-------	-------	-------	-------	42	-------	4	53.34	50.80	10.92	5.84	2.79
87914-4224	-------	-------	-------	-------	42	-------	4	53.34	50.80	12.25	7.00	2.96
87914-4215	-------	-------	-------	-------	42	-------	5	53.34	50.80	10.92	5.84	2.79
87914-4225	-------	-------	-------	-------	42	-------	5	53.34	50.80	12.25	7.00	2.96
87914-4216	-------	-------	-------	-------	42	-------	6	53.34	50.80	10.92	5.84	2.79
87914-4226	-------	-------	-------	-------	42	-------	6	53.34	50.80	12.25	7.00	2.96

THIS DRAWING CONTAINS INFORMATION THAT IS PROPRIETARY TO MOLEX ELECTRONIC TECHNOLOGIES, LLC AND SHOULD NOT BE USED WITHOUT WRITTEN PERMISSION

MIGRATED TO NX

EC NO: 114031 2017/03/17
DRWN: FCSOO
CHK'D: 2017/05/09
APPR: KHLIM

D18 REV

GENERAL TOLERANCES (UNLESS SPECIFIED)

	MM	INCH
4 PLACES	±	±
3 PLACES	±	±
2 PLACES	± 0.2	±
1 PLACES	±	±
0 PLACES	±	±

ANGULAR TOL ± 3.0

DRAFT WHERE APPLICABLE MUST REMAIN WITHIN DIMENSIONS

DIMENSION UNITS: MM
SCALE: NTS

DRWN BY: KCHO DATE: 2004/11/05
CHK'D BY: PTLIM DATE: 2004/12/08
APPR BY: MLONG DATE: 2010/09/06

DRAWING SIZE: A3
THIRD ANGLE PROJECTION

molex®

2.54MM PITCH
DUAL ROW HEADER SINGLE WAFER, T/H

PRODUCT CUSTOMER DRAWING

SERIES: 87914
MATERIAL NUMBER: SEE TABLE
CUSTOMER: GENERAL MARKET

DOCUMENT NUMBER: SD-87914-013
DOC TYPE: PSD
DOC PART: 000
SHEET NUMBER: 26 OF 45

RELEASE STATUS
RELEASE DATE

FORMAT: Met-lega-master-tb-prod-A3
REVISION: C
DATE: 2016/02/04

PART NO FOR TRAY PACKAGING	PART NO. FOR TUBE WITHOUT CAP PACKAGING	PART NO. FOR TUBE WITH CAP PACKAGING	PART NO. FOR TAPE & REEL WITHOUT CAP PACKAGING	PART NO. FOR TAPE & REEL WITH CAP PACKAGING	CKT SIZE	VOID POSITION	PLATING TYPE	DIMENSION				
								A	B	F	M	P
87914-4411	-------	-------	-------	-------	44	-------	1	55.88	53.34	10.92	5.84	2.79
87914-4421	-------	-------	-------	-------	44	-------	1	55.88	53.34	12.25	7.00	2.96
87914-4412	-------	-------	-------	-------	44	-------	2	55.88	53.34	10.92	5.84	2.79
87914-4422	-------	-------	-------	-------	44	-------	2	55.88	53.34	12.25	7.00	2.96
87914-4413	-------	-------	-------	-------	44	-------	3	55.88	53.34	10.92	5.84	2.79
87914-4423	-------	-------	-------	-------	44	-------	3	55.88	53.34	12.25	7.00	2.96
87914-4414	-------	-------	-------	-------	44	-------	4	55.88	53.34	10.92	5.84	2.79
87914-4424	-------	-------	-------	-------	44	-------	4	55.88	53.34	12.25	7.00	2.96
87914-4415	-------	-------	-------	-------	44	-------	5	55.88	53.34	10.92	5.84	2.79
87914-4425	-------	-------	-------	-------	44	-------	5	55.88	53.34	12.25	7.00	2.96
87914-4416	-------	-------	-------	-------	44	-------	6	55.88	53.34	10.92	5.84	2.79
87914-4426	-------	-------	-------	-------	44	-------	6	55.88	53.34	12.25	7.00	2.96

THIS DRAWING CONTAINS INFORMATION THAT IS PROPRIETARY TO MOLEX ELECTRONIC TECHNOLOGIES, LLC AND SHOULD NOT BE USED WITHOUT WRITTEN PERMISSION

MIGRATED TO NX

EC NO: 114031 2017/03/17
DRWN: FCSOO
CHK'D: 2017/05/09
APPR: KHLIM

D18 REV

GENERAL TOLERANCES (UNLESS SPECIFIED)

	MM	INCH
4 PLACES	±	±
3 PLACES	±	±
2 PLACES	± 0.2	±
1 PLACES	±	±
0 PLACES	±	±

ANGULAR TOL ± 3.0

DRAFT WHERE APPLICABLE MUST REMAIN WITHIN DIMENSIONS

DIMENSION UNITS: MM
SCALE: NTS

DRWN BY: KCHO DATE: 2004/11/05
CHK'D BY: PTLIM DATE: 2004/12/08
APPR BY: MLONG DATE: 2010/09/06

DRAWING SIZE: A3
THIRD ANGLE PROJECTION

molex®

2.54MM PITCH
DUAL ROW HEADER SINGLE WAFER, T/H

PRODUCT CUSTOMER DRAWING

SERIES	MATERIAL NUMBER	CUSTOMER
87914	SEE TABLE	GENERAL MARKET

DOCUMENT NUMBER	DOC TYPE	DOC PART	SHEET NUMBER
SD-87914-013	PSD	000	27 OF 45

RELEASE STATUS		RELEASE DATE	

FORMAT: Met-lega-master-tb-prod-A3
REVISION: C
DATE: 2016/02/04

PART NO FOR TRAY PACKAGING	PART NO. FOR TUBE WITHOUT CAP PACKAGING	PART NO. FOR TUBE WITH CAP PACKAGING	PART NO. FOR TAPE & REEL WITHOUT CAP PACKAGING	PART NO. FOR TAPE & REEL WITH CAP PACKAGING	CKT SIZE	VOID POSITION	PLATING TYPE	DIMENSION				
								A	B	F	M	P
87914-4611	-------	-------	-------	-------	46	-------	1	58.42	55.88	10.92	5.84	2.79
87914-4621	-------	-------	-------	-------	46	-------	1	58.42	55.88	12.25	7.00	2.96
87914-4612	-------	-------	-------	-------	46	-------	2	58.42	55.88	10.92	5.84	2.79
87914-4622	-------	-------	-------	-------	46	-------	2	58.42	55.88	12.25	7.00	2.96
87914-4613	-------	-------	-------	-------	46	-------	3	58.42	55.88	10.92	5.84	2.79
87914-4623	-------	-------	-------	-------	46	-------	3	58.42	55.88	12.25	7.00	2.96
87914-4614	-------	-------	-------	-------	46	-------	4	58.42	55.88	10.92	5.84	2.79
87914-4624	-------	-------	-------	-------	46	-------	4	58.42	55.88	12.25	7.00	2.96
87914-4615	-------	-------	-------	-------	46	-------	5	58.42	55.88	10.92	5.84	2.79
87914-4625	-------	-------	-------	-------	46	-------	5	58.42	55.88	12.25	7.00	2.96
87914-4616	-------	-------	-------	-------	46	-------	6	58.42	55.88	10.92	5.84	2.79
87914-4626	-------	-------	-------	-------	46	-------	6	58.42	55.88	12.25	7.00	2.96

THIS DRAWING CONTAINS INFORMATION THAT IS PROPRIETARY TO MOLEX ELECTRONIC TECHNOLOGIES, LLC AND SHOULD NOT BE USED WITHOUT WRITTEN PERMISSION

MIGRATED TO NX

EC NO: 114031 2017/03/17
DRWN: FCSOO
CHK'D: 2017/05/09
APPR: KHLIM

D18 REV

GENERAL TOLERANCES (UNLESS SPECIFIED)

	MM	INCH
4 PLACES	±	±
3 PLACES	±	±
2 PLACES	± 0.2	±
1 PLACES	±	±
0 PLACES	±	±

ANGULAR TOL ± 3.0

DRAFT WHERE APPLICABLE MUST REMAIN WITHIN DIMENSIONS

DIMENSION UNITS: MM
SCALE: NTS

DRWN BY: KCHO DATE: 2004/11/05
CHK'D BY: PTLIM DATE: 2004/12/08
APPR BY: MLONG DATE: 2010/09/06

DRAWING SIZE: A3
THIRD ANGLE PROJECTION

molex®

2.54MM PITCH
DUAL ROW HEADER SINGLE WAFER, T/H

PRODUCT CUSTOMER DRAWING

SERIES: 87914
MATERIAL NUMBER: SEE TABLE
CUSTOMER: GENERAL MARKET

DOCUMENT NUMBER: SD-87914-013
DOC TYPE: PSD
DOC PART: 000
SHEET NUMBER: 28 OF 45

RELEASE STATUS
RELEASE DATE

FORMAT: Met-lega-master-tb-prod-A3
REVISION: C
DATE: 2016/02/04

PART NO FOR TRAY PACKAGING	PART NO. FOR TUBE WITHOUT CAP PACKAGING	PART NO. FOR TUBE WITH CAP PACKAGING	PART NO. FOR TAPE & REEL WITHOUT CAP PACKAGING	PART NO. FOR TAPE & REEL WITH CAP PACKAGING	CKT SIZE	VOID POSITION	PLATING TYPE	DIMENSION				
								A	B	F	M	P
87914-4811	-------	-------	-------	-------	48	-------	1	60.96	58.42	10.92	5.84	2.79
87914-4821	-------	-------	-------	-------	48	-------	1	60.96	58.42	12.25	7.00	2.96
87914-4812	-------	-------	-------	-------	48	-------	2	60.96	58.42	10.92	5.84	2.79
87914-4822	-------	-------	-------	-------	48	-------	2	60.96	58.42	12.25	7.00	2.96
87914-4813	-------	-------	-------	-------	48	-------	3	60.96	58.42	10.92	5.84	2.79
87914-4823	-------	-------	-------	-------	48	-------	3	60.96	58.42	12.25	7.00	2.96
87914-4814	-------	-------	-------	-------	48	-------	4	60.96	58.42	10.92	5.84	2.79
87914-4824	-------	-------	-------	-------	48	-------	4	60.96	58.42	12.25	7.00	2.96
87914-4815	-------	-------	-------	-------	48	-------	5	60.96	58.42	10.92	5.84	2.79
87914-4825	-------	-------	-------	-------	48	-------	5	60.96	58.42	12.25	7.00	2.96
87914-4816	-------	-------	-------	-------	48	-------	6	60.96	58.42	10.92	5.84	2.79
87914-4826	-------	-------	-------	-------	48	-------	6	60.96	58.42	12.25	7.00	2.96

THIS DRAWING CONTAINS INFORMATION THAT IS PROPRIETARY TO MOLEX ELECTRONIC TECHNOLOGIES, LLC AND SHOULD NOT BE USED WITHOUT WRITTEN PERMISSION

MIGRATED TO NX

EC NO: 114031 2017/03/17
DRWN: FCSOO
CHK'D: 2017/05/09
APPR: KHLIM

D18 REV

GENERAL TOLERANCES (UNLESS SPECIFIED)

	MM	INCH
4 PLACES	±	±
3 PLACES	±	±
2 PLACES	± 0.2	±
1 PLACES	±	±
0 PLACES	±	±

ANGULAR TOL ± 3.0

DRAFT WHERE APPLICABLE MUST REMAIN WITHIN DIMENSIONS

DIMENSION UNITS: MM
SCALE: NTS

DRWN BY: KCHO DATE: 2004/11/05
CHK'D BY: PTLIM DATE: 2004/12/08
APPR BY: MLONG DATE: 2010/09/06

DRAWING SIZE: A3
THIRD ANGLE PROJECTION

molex®

2.54MM PITCH
DUAL ROW HEADER SINGLE WAFER, T/H

PRODUCT CUSTOMER DRAWING

SERIES: 87914
MATERIAL NUMBER: SEE TABLE
CUSTOMER: GENERAL MARKET

DOCUMENT NUMBER: SD-87914-013
DOC TYPE: PSD
DOC PART: 000
SHEET NUMBER: 29 OF 45

RELEASE STATUS
RELEASE DATE

FORMAT: Met-lega-master-tb-prod-A3
REVISION: C
DATE: 2016/02/04

PART NO FOR TRAY PACKAGING	PART NO. FOR TUBE WITHOUT CAP PACKAGING	PART NO. FOR TUBE WITH CAP PACKAGING	PART NO. FOR TAPE & REEL WITHOUT CAP PACKAGING	PART NO. FOR TAPE & REEL WITH CAP PACKAGING	CKT SIZE	VOID POSITION	PLATING TYPE	DIMENSION				
								A	B	F	M	P
87914-5011	-------	-------	-------	-------	50	-------	1	63.50	60.96	10.92	5.84	2.79
87914-5021	-------	-------	-------	-------	50	-------	1	63.50	60.96	12.25	7.00	2.96
87914-5012	-------	-------	-------	-------	50	-------	2	63.50	60.96	10.92	5.84	2.79
87914-5022	-------	-------	-------	-------	50	-------	2	63.50	60.96	12.25	7.00	2.96
87914-5013	-------	-------	-------	-------	50	-------	3	63.50	60.96	10.92	5.84	2.79
87914-5023	-------	-------	-------	-------	50	-------	3	63.50	60.96	12.25	7.00	2.96
87914-5014	-------	-------	-------	-------	50	-------	4	63.50	60.96	10.92	5.84	2.79
87914-5024	-------	-------	-------	-------	50	-------	4	63.50	60.96	12.25	7.00	2.96
87914-5015	-------	-------	-------	-------	50	-------	5	63.50	60.96	10.92	5.84	2.79
87914-5025	-------	-------	-------	-------	50	-------	5	63.50	60.96	12.25	7.00	2.96
87914-5016	-------	-------	-------	-------	50	-------	6	63.50	60.96	10.92	5.84	2.79
87914-5026	-------	-------	-------	-------	50	-------	6	63.50	60.96	12.25	7.00	2.96

THIS DRAWING CONTAINS INFORMATION THAT IS PROPRIETARY TO MOLEX ELECTRONIC TECHNOLOGIES, LLC AND SHOULD NOT BE USED WITHOUT WRITTEN PERMISSION

MIGRATED TO NX
EC NO: 114031 2017/03/17
DRWN: FCSOO
CHK'D: 2017/05/09
APPR: KHLIM

D18 REV

GENERAL TOLERANCES (UNLESS SPECIFIED)

	MM	INCH
4 PLACES	±	±
3 PLACES	±	±
2 PLACES	± 0.2	±
1 PLACES	±	±
0 PLACES	±	±

ANGULAR TOL ± 3.0

DRAFT WHERE APPLICABLE MUST REMAIN WITHIN DIMENSIONS

DIMENSION UNITS: MM
SCALE: NTS
DRWN BY: KCHO DATE: 2004/11/05
CHK'D BY: PTLIM DATE: 2004/12/08
APPR BY: MLONG DATE: 2010/09/06
DRAWING SIZE: A3
THIRD ANGLE PROJECTION

molex®

2.54MM PITCH
DUAL ROW HEADER SINGLE WAFER, T/H

PRODUCT CUSTOMER DRAWING

SERIES	MATERIAL NUMBER	CUSTOMER
87914	SEE TABLE	GENERAL MARKET

DOCUMENT NUMBER	DOC TYPE	DOC PART	SHEET NUMBER
SD-87914-013	PSD	000	30 OF 45

RELEASE STATUS | RELEASE DATE

FORMAT: Met-lega-master-tb-prod-A3
REVISION: C
DATE: 2016/02/04

PART NO FOR BULK PACKAGING	PART NO. FOR TUBE WITHOUT CAP PACKAGING	PART NO. FOR TUBE WITH CAP PACKAGING	PART NO. FOR TAPE & REEL WITHOUT CAP PACKAGING	PART NO. FOR TAPE & REEL WITH CAP PACKAGING	CKT SIZE	VOID POSITION	PLATING TYPE	DIMENSION				
								A	B	F	M	P
87914-5211	-------	-------	-------	-------	52	-------	1	66.04	63.50	10.92	5.84	2.79
87914-5221	-------	-------	-------	-------	52	-------	1	66.04	63.50	12.25	7.00	2.96
87914-5212	-------	-------	-------	-------	52	-------	2	66.04	63.50	10.92	5.84	2.79
87914-5222	-------	-------	-------	-------	52	-------	2	66.04	63.50	12.25	7.00	2.96
87914-5213	-------	-------	-------	-------	52	-------	3	66.04	63.50	10.92	5.84	2.79
87914-5223	-------	-------	-------	-------	52	-------	3	66.04	63.50	12.25	7.00	2.96
87914-5214	-------	-------	-------	-------	52	-------	4	66.04	63.50	10.92	5.84	2.79
87914-5224	-------	-------	-------	-------	52	-------	4	66.04	63.50	12.25	7.00	2.96
87914-5215	-------	-------	-------	-------	52	-------	5	66.04	63.50	10.92	5.84	2.79
87914-5225	-------	-------	-------	-------	52	-------	5	66.04	63.50	12.25	7.00	2.96
87914-5216	-------	-------	-------	-------	52	-------	6	66.04	63.50	10.92	5.84	2.79
87914-5226	-------	-------	-------	-------	52	-------	6	66.04	63.50	12.25	7.00	2.96

THIS DRAWING CONTAINS INFORMATION THAT IS PROPRIETARY TO MOLEX ELECTRONIC TECHNOLOGIES, LLC AND SHOULD NOT BE USED WITHOUT WRITTEN PERMISSION

MIGRATED TO NX

EC NO: 114031 2017/03/17
DRWN: FCSOO
CHK'D:
APPR: KHLIM 2017/05/09

GENERAL TOLERANCES (UNLESS SPECIFIED)

	MM	INCH
4 PLACES	±	±
3 PLACES	±	±
2 PLACES	± 0.2	±
1 PLACES	±	±
0 PLACES	±	±

ANGULAR TOL ± 3.0

DRAFT WHERE APPLICABLE MUST REMAIN WITHIN DIMENSIONS

D18 REV

DIMENSION UNITS: MM
SCALE: NTS

DRWN BY: KCHO DATE: 2004/11/05
CHK'D BY: PTLIM DATE: 2004/12/08
APPR BY: MLONG DATE: 2010/09/06

DRAWING SIZE: A3
THIRD ANGLE PROJECTION

molex®

2.54MM PITCH
DUAL ROW HEADER SINGLE WAFER, T/H

PRODUCT CUSTOMER DRAWING

SERIES: 87914
MATERIAL NUMBER: SEE TABLE
CUSTOMER: GENERAL MARKET

DOCUMENT NUMBER: SD-87914-013
DOC TYPE: PSD
DOC PART: 000
SHEET NUMBER: 31 OF 45

RELEASE STATUS
RELEASE DATE

FORMAT: Met-lega-master-tb-prod-A3
REVISION: C
DATE: 2016/02/04

PART NO FOR BULK PACKAGING	PART NO. FOR TUBE WITHOUT CAP PACKAGING	PART NO. FOR TUBE WITH CAP PACKAGING	PART NO. FOR TAPE & REEL WITHOUT CAP PACKAGING	PART NO. FOR TAPE & REEL WITH CAP PACKAGING	CKT SIZE	VOID POSITION	PLATING TYPE	DIMENSION				
								A	B	F	M	P
87914-5411	-------	-------	-------	-------	54	-------	1	68.58	66.04	10.92	5.84	2.79
87914-5421	-------	-------	-------	-------	54	-------	1	68.58	66.04	12.25	7.00	2.96
87914-5412	-------	-------	-------	-------	54	-------	2	68.58	66.04	10.92	5.84	2.79
87914-5422	-------	-------	-------	-------	54	-------	2	68.58	66.04	12.25	7.00	2.96
87914-5413	-------	-------	-------	-------	54	-------	3	68.58	66.04	10.92	5.84	2.79
87914-5423	-------	-------	-------	-------	54	-------	3	68.58	66.04	12.25	7.00	2.96
87914-5414	-------	-------	-------	-------	54	-------	4	68.58	66.04	10.92	5.84	2.79
87914-5424	-------	-------	-------	-------	54	-------	4	68.58	66.04	12.25	7.00	2.96
87914-5415	-------	-------	-------	-------	54	-------	5	68.58	66.04	10.92	5.84	2.79
87914-5425	-------	-------	-------	-------	54	-------	5	68.58	66.04	12.25	7.00	2.96
87914-5416	-------	-------	-------	-------	54	-------	6	68.58	66.04	10.92	5.84	2.79
87914-5426	-------	-------	-------	-------	54	-------	6	68.58	66.04	12.25	7.00	2.96

THIS DRAWING CONTAINS INFORMATION THAT IS PROPRIETARY TO MOLEX ELECTRONIC TECHNOLOGIES, LLC AND SHOULD NOT BE USED WITHOUT WRITTEN PERMISSION

MIGRATED TO NX

EC NO: 114031 2017/03/17
DRWN: FCSOO
CHK'D:
APPR: KHLIM 2017/05/09

GENERAL TOLERANCES (UNLESS SPECIFIED)

	MM	INCH
4 PLACES	±	±
3 PLACES	±	±
2 PLACES	± 0.2	±
1 PLACES	±	±
0 PLACES	±	±

ANGULAR TOL ± 3.0

DRAFT WHERE APPLICABLE MUST REMAIN WITHIN DIMENSIONS

D18 REV

DIMENSION UNITS: MM
SCALE: NTS

DRWN BY: KCHO DATE: 2004/11/05
CHK'D BY: PTLIM DATE: 2004/12/08
APPR BY: MLONG DATE: 2010/09/06

DRAWING SIZE: A3
THIRD ANGLE PROJECTION

molex®

2.54MM PITCH
DUAL ROW HEADER SINGLE WAFER, T/H

PRODUCT CUSTOMER DRAWING

SERIES: 87914
MATERIAL NUMBER: SEE TABLE
CUSTOMER: GENERAL MARKET

DOCUMENT NUMBER: SD-87914-013
DOC TYPE: PSD
DOC PART: 000
SHEET NUMBER: 32 OF 45

RELEASE STATUS
RELEASE DATE

FORMAT: Met-lega-master-tb-prod-A3
REVISION: C
DATE: 2016/02/04

PART NO FOR BULK PACKAGING	PART NO. FOR TUBE WITHOUT CAP PACKAGING	PART NO. FOR TUBE WITH CAP PACKAGING	PART NO. FOR TAPE & REEL WITHOUT CAP PACKAGING	PART NO. FOR TAPE & REEL WITH CAP PACKAGING	CKT SIZE	VOID POSITION	PLATING TYPE	DIMENSION				
								A	B	F	M	P
87914-5611	-------	-------	-------	-------	56	-------	1	71.12	68.58	10.92	5.84	2.79
87914-5621	-------	-------	-------	-------	56	-------	1	71.12	68.58	12.25	7.00	2.96
87914-5612	-------	-------	-------	-------	56	-------	2	71.12	68.58	10.92	5.84	2.79
87914-5622	-------	-------	-------	-------	56	-------	2	71.12	68.58	12.25	7.00	2.96
87914-5613	-------	-------	-------	-------	56	-------	3	71.12	68.58	10.92	5.84	2.79
87914-5623	-------	-------	-------	-------	56	-------	3	71.12	68.58	12.25	7.00	2.96
87914-5614	-------	-------	-------	-------	56	-------	4	71.12	68.58	10.92	5.84	2.79
87914-5624	-------	-------	-------	-------	56	-------	4	71.12	68.58	12.25	7.00	2.96
87914-5615	-------	-------	-------	-------	56	-------	5	71.12	68.58	10.92	5.84	2.79
87914-5625	-------	-------	-------	-------	56	-------	5	71.12	68.58	12.25	7.00	2.96
87914-5616	-------	-------	-------	-------	56	-------	6	71.12	68.58	10.92	5.84	2.79
87914-5626	-------	-------	-------	-------	56	-------	6	71.12	68.58	12.25	7.00	2.96

THIS DRAWING CONTAINS INFORMATION THAT IS PROPRIETARY TO MOLEX ELECTRONIC TECHNOLOGIES, LLC AND SHOULD NOT BE USED WITHOUT WRITTEN PERMISSION

MIGRATED TO NX

EC NO: 114031 2017/03/17
DRWN: FCSOO
CHK'D: 2017/05/09
APPR: KHLIM

D18 REV

GENERAL TOLERANCES (UNLESS SPECIFIED)

	MM	INCH
4 PLACES	±	±
3 PLACES	±	±
2 PLACES	± 0.2	±
1 PLACES	±	±
0 PLACES	±	±

ANGULAR TOL ± 3.0

DRAFT WHERE APPLICABLE MUST REMAIN WITHIN DIMENSIONS

DIMENSION UNITS: MM
SCALE: NTS

DRWN BY: KCHO DATE: 2004/11/05
CHK'D BY: PTLIM DATE: 2004/12/08
APPR BY: MLONG DATE: 2010/09/06

DRAWING SIZE: A3
THIRD ANGLE PROJECTION

molex®

2.54MM PITCH
DUAL ROW HEADER SINGLE WAFER, T/H

PRODUCT CUSTOMER DRAWING

SERIES: 87914
MATERIAL NUMBER: SEE TABLE
CUSTOMER: GENERAL MARKET

DOCUMENT NUMBER: SD-87914-013
DOC TYPE: PSD
DOC PART: 000
SHEET NUMBER: 33 OF 45

RELEASE STATUS
RELEASE DATE

FORMAT: Met-lega-master-tb-prod-A3
REVISION: C
DATE: 2016/02/04

PART NO FOR BULK PACKAGING	PART NO. FOR TUBE WITHOUT CAP PACKAGING	PART NO. FOR TUBE WITH CAP PACKAGING	PART NO. FOR TAPE & REEL WITHOUT CAP PACKAGING	PART NO. FOR TAPE & REEL WITH CAP PACKAGING	CKT SIZE	VOID POSITION	PLATING TYPE	DIMENSION				
								A	B	F	M	P
87914-5811	-------	-------	-------	-------	58	-------	1	73.66	71.12	10.92	5.84	2.79
87914-5821	-------	-------	-------	-------	58	-------	1	73.66	71.12	12.25	7.00	2.96
87914-5812	-------	-------	-------	-------	58	-------	2	73.66	71.12	10.92	5.84	2.79
87914-5822	-------	-------	-------	-------	58	-------	2	73.66	71.12	12.25	7.00	2.96
87914-5813	-------	-------	-------	-------	58	-------	3	73.66	71.12	10.92	5.84	2.79
87914-5823	-------	-------	-------	-------	58	-------	3	73.66	71.12	12.25	7.00	2.96
87914-5814	-------	-------	-------	-------	58	-------	4	73.66	71.12	10.92	5.84	2.79
87914-5824	-------	-------	-------	-------	58	-------	4	73.66	71.12	12.25	7.00	2.96
87914-5815	-------	-------	-------	-------	58	-------	5	73.66	71.12	10.92	5.84	2.79
87914-5825	-------	-------	-------	-------	58	-------	5	73.66	71.12	12.25	7.00	2.96
87914-5816	-------	-------	-------	-------	58	-------	6	73.66	71.12	10.92	5.84	2.79
87914-5826	-------	-------	-------	-------	58	-------	6	73.66	71.12	12.25	7.00	2.96

THIS DRAWING CONTAINS INFORMATION THAT IS PROPRIETARY TO MOLEX ELECTRONIC TECHNOLOGIES, LLC AND SHOULD NOT BE USED WITHOUT WRITTEN PERMISSION

MIGRATED TO NX

EC NO: 114031 2017/03/17
DRWN: FCSOO
CHK'D:
APPR: KHLIM 2017/05/09

D18 REV

GENERAL TOLERANCES (UNLESS SPECIFIED)

	MM	INCH
4 PLACES	±	±
3 PLACES	±	±
2 PLACES	± 0.2	±
1 PLACES	±	±
0 PLACES	±	±

ANGULAR TOL ± 3.0

DRAFT WHERE APPLICABLE MUST REMAIN WITHIN DIMENSIONS

DIMENSION UNITS: MM
SCALE: NTS

DRWN BY: KCHO DATE: 2004/11/05
CHK'D BY: PTLIM DATE: 2004/12/08
APPR BY: MLONG DATE: 2010/09/06

DRAWING SIZE: A3
THIRD ANGLE PROJECTION

molex®

2.54MM PITCH
DUAL ROW HEADER SINGLE WAFER, T/H

PRODUCT CUSTOMER DRAWING

SERIES	MATERIAL NUMBER	CUSTOMER
87914	SEE TABLE	GENERAL MARKET

DOCUMENT NUMBER	DOC TYPE	DOC PART	SHEET NUMBER
SD-87914-013	PSD	000	34 OF 45

RELEASE STATUS | RELEASE DATE

FORMAT: Met-lega-master-tb-prod-A3
REVISION: C
DATE: 2016/02/04

PART NO FOR BULK PACKAGING	PART NO. FOR TUBE WITHOUT CAP PACKAGING	PART NO. FOR TUBE WITH CAP PACKAGING	PART NO. FOR TAPE & REEL WITHOUT CAP PACKAGING	PART NO. FOR TAPE & REEL WITH CAP PACKAGING	CKT SIZE	VOID POSITION	PLATING TYPE	DIMENSION				
								A	B	F	M	P
87914-6011	-------	-------	-------	-------	60	-------	1	76.20	73.66	10.92	5.84	2.79
87914-6021	-------	-------	-------	-------	60	-------	1	76.20	73.66	12.25	7.00	2.96
87914-6012	-------	-------	-------	-------	60	-------	2	76.20	73.66	10.92	5.84	2.79
87914-6022	-------	-------	-------	-------	60	-------	2	76.20	73.66	12.25	7.00	2.96
87914-6013	-------	-------	-------	-------	60	-------	3	76.20	73.66	10.92	5.84	2.79
87914-6023	-------	-------	-------	-------	60	-------	3	76.20	73.66	12.25	7.00	2.96
87914-6014	-------	-------	-------	-------	60	-------	4	76.20	73.66	10.92	5.84	2.79
87914-6024	-------	-------	-------	-------	60	-------	4	76.20	73.66	12.25	7.00	2.96
87914-6015	-------	-------	-------	-------	60	-------	5	76.20	73.66	10.92	5.84	2.79
87914-6025	-------	-------	-------	-------	60	-------	5	76.20	73.66	12.25	7.00	2.96
87914-6016	-------	-------	-------	-------	60	-------	6	76.20	73.66	10.92	5.84	2.79
87914-6026	-------	-------	-------	-------	60	-------	6	76.20	73.66	12.25	7.00	2.96

THIS DRAWING CONTAINS INFORMATION THAT IS PROPRIETARY TO MOLEX ELECTRONIC TECHNOLOGIES, LLC AND SHOULD NOT BE USED WITHOUT WRITTEN PERMISSION

MIGRATED TO NX

EC NO: 114031 2017/03/17
DRWN: FCSOO
CHK'D:
APPR: KHLIM 2017/05/09

D18 REV

GENERAL TOLERANCES (UNLESS SPECIFIED)

	MM	INCH
4 PLACES	±	±
3 PLACES	±	±
2 PLACES	± 0.2	±
1 PLACES	±	±
0 PLACES	±	±

ANGULAR TOL ± 3.0

DRAFT WHERE APPLICABLE MUST REMAIN WITHIN DIMENSIONS

DIMENSION UNITS: MM
SCALE: NTS

DRWN BY: KCHO DATE: 2004/11/05
CHK'D BY: PTLIM DATE: 2004/12/08
APPR BY: MLONG DATE: 2010/09/06

DRAWING SIZE: A3
THIRD ANGLE PROJECTION

molex®

2.54MM PITCH
DUAL ROW HEADER SINGLE WAFER, T/H

PRODUCT CUSTOMER DRAWING

SERIES	MATERIAL NUMBER	CUSTOMER
87914	SEE TABLE	GENERAL MARKET

DOCUMENT NUMBER	DOC TYPE	DOC PART	SHEET NUMBER
SD-87914-013	PSD	000	35 OF 45

RELEASE STATUS		RELEASE DATE	

FORMAT: Met-lega-master-tb-prod-A3
REVISION: C
DATE: 2016/02/04

PART NO FOR BULK PACKAGING	PART NO. FOR TUBE WITHOUT CAP PACKAGING	PART NO. FOR TUBE WITH CAP PACKAGING	PART NO. FOR TAPE & REEL WITHOUT CAP PACKAGING	PART NO. FOR TAPE & REEL WITH CAP PACKAGING	CKT SIZE	VOID POSITION	PLATING TYPE	DIMENSION				
								A	B	F	M	P
87914-6211	-------	-------	-------	-------	62	-------	1	78.74	76.20	10.92	5.84	2.79
87914-6221	-------	-------	-------	-------	62	-------	1	78.74	76.20	12.25	7.00	2.96
87914-6212	-------	-------	-------	-------	62	-------	2	78.74	76.20	10.92	5.84	2.79
87914-6222	-------	-------	-------	-------	62	-------	2	78.74	76.20	12.25	7.00	2.96
87914-6213	-------	-------	-------	-------	62	-------	3	78.74	76.20	10.92	5.84	2.79
87914-6223	-------	-------	-------	-------	62	-------	3	78.74	76.20	12.25	7.00	2.96
87914-6214	-------	-------	-------	-------	62	-------	4	78.74	76.20	10.92	5.84	2.79
87914-6224	-------	-------	-------	-------	62	-------	4	78.74	76.20	12.25	7.00	2.96
87914-6215	-------	-------	-------	-------	62	-------	5	78.74	76.20	10.92	5.84	2.79
87914-6225	-------	-------	-------	-------	62	-------	5	78.74	76.20	12.25	7.00	2.96
87914-6216	-------	-------	-------	-------	62	-------	6	78.74	76.20	10.92	5.84	2.79
87914-6226	-------	-------	-------	-------	62	-------	6	78.74	76.20	12.25	7.00	2.96

THIS DRAWING CONTAINS INFORMATION THAT IS PROPRIETARY TO MOLEX ELECTRONIC TECHNOLOGIES, LLC AND SHOULD NOT BE USED WITHOUT WRITTEN PERMISSION

MIGRATED TO NX

EC NO: 114031 2017/03/17
DRWN: FCSOO
CHK'D: 2017/05/09
APPR: KHLIM

D18 REV

GENERAL TOLERANCES (UNLESS SPECIFIED)

	MM	INCH
4 PLACES	±	±
3 PLACES	±	±
2 PLACES	± 0.2	±
1 PLACES	±	±
0 PLACES	±	±

ANGULAR TOL ± 3.0

DRAFT WHERE APPLICABLE MUST REMAIN WITHIN DIMENSIONS

DIMENSION UNITS: MM
SCALE: NTS

DRWN BY: KCHO DATE: 2004/11/05
CHK'D BY: PTLIM DATE: 2004/12/08
APPR BY: MLONG DATE: 2010/09/06

DRAWING SIZE: A3
THIRD ANGLE PROJECTION

molex®

2.54MM PITCH
DUAL ROW HEADER SINGLE WAFER, T/H

PRODUCT CUSTOMER DRAWING

SERIES: 87914
MATERIAL NUMBER: SEE TABLE
CUSTOMER: GENERAL MARKET

DOCUMENT NUMBER: SD-87914-013
DOC TYPE: PSD
DOC PART: 000
SHEET NUMBER: 36 OF 45

RELEASE STATUS
RELEASE DATE

FORMAT: Met-lega-master-tb-prod-A3
REVISION: C
DATE: 2016/02/04

PART NO FOR BULK PACKAGING	PART NO. FOR TUBE WITHOUT CAP PACKAGING	PART NO. FOR TUBE WITH CAP PACKAGING	PART NO. FOR TAPE & REEL WITHOUT CAP PACKAGING	PART NO. FOR TAPE & REEL WITH CAP PACKAGING	CKT SIZE	VOID POSITION	PLATING TYPE	DIMENSION				
								A	B	F	M	P
87914-6411	-------	-------	-------	-------	64	-------	1	81.28	78.74	10.92	5.84	2.79
87914-6421	-------	-------	-------	-------	64	-------	1	81.28	78.74	12.25	7.00	2.96
87914-6412	-------	-------	-------	-------	64	-------	2	81.28	78.74	10.92	5.84	2.79
87914-6422	-------	-------	-------	-------	64	-------	2	81.28	78.74	12.25	7.00	2.96
87914-6413	-------	-------	-------	-------	64	-------	3	81.28	78.74	10.92	5.84	2.79
87914-6423	-------	-------	-------	-------	64	-------	3	81.28	78.74	12.25	7.00	2.96
87914-6414	-------	-------	-------	-------	64	-------	4	81.28	78.74	10.92	5.84	2.79
87914-6424	-------	-------	-------	-------	64	-------	4	81.28	78.74	12.25	7.00	2.96
87914-6415	-------	-------	-------	-------	64	-------	5	81.28	78.74	10.92	5.84	2.79
87914-6425	-------	-------	-------	-------	64	-------	5	81.28	78.74	12.25	7.00	2.96
87914-6416	-------	-------	-------	-------	64	-------	6	81.28	78.74	10.92	5.84	2.79
87914-6426	-------	-------	-------	-------	64	-------	6	81.28	78.74	12.25	7.00	2.96

THIS DRAWING CONTAINS INFORMATION THAT IS PROPRIETARY TO MOLEX ELECTRONIC TECHNOLOGIES, LLC AND SHOULD NOT BE USED WITHOUT WRITTEN PERMISSION

MIGRATED TO NX

EC NO: 114031 2017/03/17
DRWN: FCSOO
CHK'D: 2017/05/09
APPR: KHLIM

D18 REV

GENERAL TOLERANCES (UNLESS SPECIFIED)

	MM	INCH
4 PLACES	±	±
3 PLACES	±	±
2 PLACES	± 0.2	±
1 PLACES	±	±
0 PLACES	±	±

ANGULAR TOL ± 3.0

DRAFT WHERE APPLICABLE MUST REMAIN WITHIN DIMENSIONS

DIMENSION UNITS: MM
SCALE: NTS

DRWN BY: KCHO DATE: 2004/11/05
CHK'D BY: PTLIM DATE: 2004/12/08
APPR BY: MLONG DATE: 2010/09/06

DRAWING SIZE: A3
THIRD ANGLE PROJECTION

molex®

2.54MM PITCH
DUAL ROW HEADER SINGLE WAFER, T/H

PRODUCT CUSTOMER DRAWING

SERIES: 87914
MATERIAL NUMBER: SEE TABLE
CUSTOMER: GENERAL MARKET

DOCUMENT NUMBER: SD-87914-013
DOC TYPE: PSD
DOC PART: 000
SHEET NUMBER: 37 OF 45

RELEASE STATUS
RELEASE DATE

FORMAT: Met-lega-master-tb-prod-A3
REVISION: C
DATE: 2016/02/04

PART NO FOR BULK PACKAGING	PART NO. FOR TUBE WITHOUT CAP PACKAGING	PART NO. FOR TUBE WITH CAP PACKAGING	PART NO. FOR TAPE & REEL WITHOUT CAP PACKAGING	PART NO. FOR TAPE & REEL WITH CAP PACKAGING	CKT SIZE	VOID POSITION	PLATING TYPE	DIMENSION				
								A	B	F	M	P
87914-6611	-------	-------	-------	-------	66	-------	1	83.82	81.28	10.92	5.84	2.79
87914-6621	-------	-------	-------	-------	66	-------	1	83.82	81.28	12.25	7.00	2.96
87914-6612	-------	-------	-------	-------	66	-------	2	83.82	81.28	10.92	5.84	2.79
87914-6622	-------	-------	-------	-------	66	-------	2	83.82	81.28	12.25	7.00	2.96
87914-6613	-------	-------	-------	-------	66	-------	3	83.82	81.28	10.92	5.84	2.79
87914-6623	-------	-------	-------	-------	66	-------	3	83.82	81.28	12.25	7.00	2.96
87914-6614	-------	-------	-------	-------	66	-------	4	83.82	81.28	10.92	5.84	2.79
87914-6624	-------	-------	-------	-------	66	-------	4	83.82	81.28	12.25	7.00	2.96
87914-6615	-------	-------	-------	-------	66	-------	5	83.82	81.28	10.92	5.84	2.79
87914-6625	-------	-------	-------	-------	66	-------	5	83.82	81.28	12.25	7.00	2.96
87914-6616	-------	-------	-------	-------	66	-------	6	83.82	81.28	10.92	5.84	2.79
87914-6626	-------	-------	-------	-------	66	-------	6	83.82	81.28	12.25	7.00	2.96

THIS DRAWING CONTAINS INFORMATION THAT IS PROPRIETARY TO MOLEX ELECTRONIC TECHNOLOGIES, LLC AND SHOULD NOT BE USED WITHOUT WRITTEN PERMISSION

MIGRATED TO NX

EC NO: 114031 2017/03/17
DRWN: FCSOO
CHK'D:
APPR: KHLIM 2017/05/09

GENERAL TOLERANCES (UNLESS SPECIFIED)

	MM	INCH
4 PLACES	±	±
3 PLACES	±	±
2 PLACES	± 0.2	±
1 PLACES	±	±
0 PLACES	±	±

ANGULAR TOL ± 3.0

DRAFT WHERE APPLICABLE MUST REMAIN WITHIN DIMENSIONS

D18 REV

DIMENSION UNITS: MM
SCALE: NTS

DRWN BY: KCHO DATE: 2004/11/05
CHK'D BY: PTLIM DATE: 2004/12/08
APPR BY: MLONG DATE: 2010/09/06

DRAWING SIZE: A3
THIRD ANGLE PROJECTION

molex®

2.54MM PITCH
DUAL ROW HEADER SINGLE WAFER, T/H

PRODUCT CUSTOMER DRAWING

SERIES	MATERIAL NUMBER	CUSTOMER
87914	SEE TABLE	GENERAL MARKET

DOCUMENT NUMBER	DOC TYPE	DOC PART	SHEET NUMBER
SD-87914-013	PSD	000	38 OF 45

RELEASE STATUS | RELEASE DATE

FORMAT: Met-lega-master-tb-prod-A3
REVISION: C
DATE: 2016/02/04

PART NO FOR BULK PACKAGING	PART NO. FOR TUBE WITHOUT CAP PACKAGING	PART NO. FOR TUBE WITH CAP PACKAGING	PART NO. FOR TAPE & REEL WITHOUT CAP PACKAGING	PART NO. FOR TAPE & REEL WITH CAP PACKAGING	CKT SIZE	VOID POSITION	PLATING TYPE	DIMENSION				
								A	B	F	M	P
87914-6811	-------	-------	-------	-------	68	-------	1	86.36	83.82	10.92	5.84	2.79
87914-6821	-------	-------	-------	-------	68	-------	1	86.36	83.82	12.25	7.00	2.96
87914-6812	-------	-------	-------	-------	68	-------	2	86.36	83.82	10.92	5.84	2.79
87914-6822	-------	-------	-------	-------	68	-------	2	86.36	83.82	12.25	7.00	2.96
87914-6813	-------	-------	-------	-------	68	-------	3	86.36	83.82	10.92	5.84	2.79
87914-6823	-------	-------	-------	-------	68	-------	3	86.36	83.82	12.25	7.00	2.96
87914-6814	-------	-------	-------	-------	68	-------	4	86.36	83.82	10.92	5.84	2.79
87914-6824	-------	-------	-------	-------	68	-------	4	86.36	83.82	12.25	7.00	2.96
87914-6815	-------	-------	-------	-------	68	-------	5	86.36	83.82	10.92	5.84	2.79
87914-6825	-------	-------	-------	-------	68	-------	5	86.36	83.82	12.25	7.00	2.96
87914-6816	-------	-------	-------	-------	68	-------	6	86.36	83.82	10.92	5.84	2.79
87914-6826	-------	-------	-------	-------	68	-------	6	86.36	83.82	12.25	7.00	2.96

THIS DRAWING CONTAINS INFORMATION THAT IS PROPRIETARY TO MOLEX ELECTRONIC TECHNOLOGIES, LLC AND SHOULD NOT BE USED WITHOUT WRITTEN PERMISSION

MIGRATED TO NX

EC NO: 114031 2017/03/17
DRWN: FCSOO
CHK'D: 2017/05/09
APPR: KHLIM

D18 REV

GENERAL TOLERANCES (UNLESS SPECIFIED)

	MM	INCH
4 PLACES	±	±
3 PLACES	±	±
2 PLACES	± 0.2	±
1 PLACES	±	±
0 PLACES	±	±

ANGULAR TOL ± 3.0

DRAFT WHERE APPLICABLE MUST REMAIN WITHIN DIMENSIONS

DIMENSION UNITS: MM
SCALE: NTS

DRWN BY: KCHO DATE: 2004/11/05
CHK'D BY: PTLIM DATE: 2004/12/08
APPR BY: MLONG DATE: 2010/09/06

DRAWING SIZE: A3
THIRD ANGLE PROJECTION

molex®

2.54MM PITCH
DUAL ROW HEADER SINGLE WAFER, T/H

PRODUCT CUSTOMER DRAWING

SERIES: 87914
MATERIAL NUMBER: SEE TABLE
CUSTOMER: GENERAL MARKET

DOCUMENT NUMBER: SD-87914-013
DOC TYPE: PSD
DOC PART: 000
SHEET NUMBER: 39 OF 45

RELEASE STATUS
RELEASE DATE

FORMAT: Met-lega-master-tb-prod-A3
REVISION: C
DATE: 2016/02/04

PART NO FOR BULK PACKAGING	PART NO. FOR TUBE WITHOUT CAP PACKAGING	PART NO. FOR TUBE WITH CAP PACKAGING	PART NO. FOR TAPE & REEL WITHOUT CAP PACKAGING	PART NO. FOR TAPE & REEL WITH CAP PACKAGING	CKT SIZE	VOID POSITION	PLATING TYPE	DIMENSION				
								A	B	F	M	P
87914-7011	-------	-------	-------	-------	70	-------	1	88.90	86.36	10.92	5.84	2.79
87914-7021	-------	-------	-------	-------	70	-------	1	88.90	86.36	12.25	7.00	2.96
87914-7012	-------	-------	-------	-------	70	-------	2	88.90	86.36	10.92	5.84	2.79
87914-7022	-------	-------	-------	-------	70	-------	2	88.90	86.36	12.25	7.00	2.96
87914-7013	-------	-------	-------	-------	70	-------	3	88.90	86.36	10.92	5.84	2.79
87914-7023	-------	-------	-------	-------	70	-------	3	88.90	86.36	12.25	7.00	2.96
87914-7014	-------	-------	-------	-------	70	-------	4	88.90	86.36	10.92	5.84	2.79
87914-7024	-------	-------	-------	-------	70	-------	4	88.90	86.36	12.25	7.00	2.96
87914-7015	-------	-------	-------	-------	70	-------	5	88.90	86.36	10.92	5.84	2.79
87914-7025	-------	-------	-------	-------	70	-------	5	88.90	86.36	12.25	7.00	2.96
87914-7016	-------	-------	-------	-------	70	-------	6	88.90	86.36	10.92	5.84	2.79
87914-7026	-------	-------	-------	-------	70	-------	6	88.90	86.36	12.25	7.00	2.96

THIS DRAWING CONTAINS INFORMATION THAT IS PROPRIETARY TO MOLEX ELECTRONIC TECHNOLOGIES, LLC AND SHOULD NOT BE USED WITHOUT WRITTEN PERMISSION

MIGRATED TO NX

EC NO: 114031 2017/03/17
DRWN: FCSOO
CHK'D: 2017/05/09
APPR: KHLIM

D18 REV

GENERAL TOLERANCES (UNLESS SPECIFIED)

	MM	INCH
4 PLACES	±	±
3 PLACES	±	±
2 PLACES	± 0.2	±
1 PLACES	±	±
0 PLACES	±	±

ANGULAR TOL ± 3.0

DRAFT WHERE APPLICABLE MUST REMAIN WITHIN DIMENSIONS

DIMENSION UNITS: MM
SCALE: NTS

DRWN BY: KCHO DATE: 2004/11/05
CHK'D BY: PTLIM DATE: 2004/12/08
APPR BY: MLONG DATE: 2010/09/06

DRAWING SIZE: A3
THIRD ANGLE PROJECTION

molex®

2.54MM PITCH
DUAL ROW HEADER SINGLE WAFER, T/H

PRODUCT CUSTOMER DRAWING

SERIES: 87914
MATERIAL NUMBER: SEE TABLE
CUSTOMER: GENERAL MARKET

DOCUMENT NUMBER: SD-87914-013
DOC TYPE: PSD
DOC PART: 000
SHEET NUMBER: 40 OF 45

RELEASE STATUS
RELEASE DATE

FORMAT: Met-lega-master-tb-prod-A3
REVISION: C
DATE: 2016/02/04

PART NO FOR BULK PACKAGING	PART NO. FOR TUBE WITHOUT CAP PACKAGING	PART NO. FOR TUBE WITH CAP PACKAGING	PART NO. FOR TAPE & REEL WITHOUT CAP PACKAGING	PART NO. FOR TAPE & REEL WITH CAP PACKAGING	CKT SIZE	VOID POSITION	PLATING TYPE	DIMENSION				
								A	B	F	M	P
87914-7211	-------	-------	-------	-------	72	-------	1	91.44	88.90	10.92	5.84	2.79
87914-7221	-------	-------	-------	-------	72	-------	1	91.44	88.90	12.25	7.00	2.96
87914-7212	-------	-------	-------	-------	72	-------	2	91.44	88.90	10.92	5.84	2.79
87914-7222	-------	-------	-------	-------	72	-------	2	91.44	88.90	12.25	7.00	2.96
87914-7213	-------	-------	-------	-------	72	-------	3	91.44	88.90	10.92	5.84	2.79
87914-7223	-------	-------	-------	-------	72	-------	3	91.44	88.90	12.25	7.00	2.96
87914-7214	-------	-------	-------	-------	72	-------	4	91.44	88.90	10.92	5.84	2.79
87914-7224	-------	-------	-------	-------	72	-------	4	91.44	88.90	12.25	7.00	2.96
87914-7215	-------	-------	-------	-------	72	-------	5	91.44	88.90	10.92	5.84	2.79
87914-7225	-------	-------	-------	-------	72	-------	5	91.44	88.90	12.25	7.00	2.96
87914-7216	-------	-------	-------	-------	72	-------	6	91.44	88.90	10.92	5.84	2.79
87914-7226	-------	-------	-------	-------	72	-------	6	91.44	88.90	12.25	7.00	2.96

THIS DRAWING CONTAINS INFORMATION THAT IS PROPRIETARY TO MOLEX ELECTRONIC TECHNOLOGIES, LLC AND SHOULD NOT BE USED WITHOUT WRITTEN PERMISSION

MIGRATED TO NX

EC NO: 114031 2017/03/17
DRWN: FCSOO
CHK'D: 2017/05/09
APPR: KHLIM

D18 REV

GENERAL TOLERANCES (UNLESS SPECIFIED)

	MM	INCH
4 PLACES	±	±
3 PLACES	±	±
2 PLACES	± 0.2	±
1 PLACES	±	±
0 PLACES	±	±

ANGULAR TOL ± 3.0

DRAFT WHERE APPLICABLE MUST REMAIN WITHIN DIMENSIONS

DIMENSION UNITS: MM
SCALE: NTS
DRWN BY: KCHO DATE: 2004/11/05
CHK'D BY: PTLIM DATE: 2004/12/08
APPR BY: MLONG DATE: 2010/09/06
DRAWING SIZE: A3
THIRD ANGLE PROJECTION

molex®

2.54MM PITCH
DUAL ROW HEADER SINGLE WAFER, T/H

PRODUCT CUSTOMER DRAWING

SERIES	MATERIAL NUMBER	CUSTOMER
87914	SEE TABLE	GENERAL MARKET

DOCUMENT NUMBER	DOC TYPE	DOC PART	SHEET NUMBER
SD-87914-013	PSD	000	41 OF 45

RELEASE STATUS | RELEASE DATE

FORMAT: Met-lega-master-tb-prod-A3
REVISION: C
DATE: 2016/02/04

PART NO FOR BULK PACKAGING	PART NO. FOR TUBE WITHOUT CAP PACKAGING	PART NO. FOR TUBE WITH CAP PACKAGING	PART NO. FOR TAPE & REEL WITHOUT CAP PACKAGING	PART NO. FOR TAPE & REEL WITH CAP PACKAGING	CKT SIZE	VOID POSITION	PLATING TYPE	DIMENSION				
								A	B	F	M	P
87914-7411	-------	-------	-------	-------	74	-------	1	93.98	91.44	10.92	5.84	2.79
87914-7421	-------	-------	-------	-------	74	-------	1	93.98	91.44	12.25	7.00	2.96
87914-7412	-------	-------	-------	-------	74	-------	2	93.98	91.44	10.92	5.84	2.79
87914-7422	-------	-------	-------	-------	74	-------	2	93.98	91.44	12.25	7.00	2.96
87914-7413	-------	-------	-------	-------	74	-------	3	93.98	91.44	10.92	5.84	2.79
87914-7423	-------	-------	-------	-------	74	-------	3	93.98	91.44	12.25	7.00	2.96
87914-7414	-------	-------	-------	-------	74	-------	4	93.98	91.44	10.92	5.84	2.79
87914-7424	-------	-------	-------	-------	74	-------	4	93.98	91.44	12.25	7.00	2.96
87914-7415	-------	-------	-------	-------	74	-------	5	93.98	91.44	10.92	5.84	2.79
87914-7425	-------	-------	-------	-------	74	-------	5	93.98	91.44	12.25	7.00	2.96
87914-7416	-------	-------	-------	-------	74	-------	6	93.98	91.44	10.92	5.84	2.79
87914-7426	-------	-------	-------	-------	74	-------	6	93.98	91.44	12.25	7.00	2.96

THIS DRAWING CONTAINS INFORMATION THAT IS PROPRIETARY TO MOLEX ELECTRONIC TECHNOLOGIES, LLC AND SHOULD NOT BE USED WITHOUT WRITTEN PERMISSION

MIGRATED TO NX

EC NO: 114031 2017/03/17
DRWN: FCSOO
CHK'D: 2017/05/09
APPR: KHLIM

D18 REV

GENERAL TOLERANCES (UNLESS SPECIFIED)

	MM	INCH
4 PLACES	±	±
3 PLACES	±	±
2 PLACES	± 0.2	±
1 PLACES	±	±
0 PLACES	±	±

ANGULAR TOL ± 3.0

DRAFT WHERE APPLICABLE MUST REMAIN WITHIN DIMENSIONS

DIMENSION UNITS: MM
SCALE: NTS

DRWN BY: KCHO DATE: 2004/11/05
CHK'D BY: PTLIM DATE: 2004/12/08
APPR BY: MLONG DATE: 2010/09/06

DRAWING SIZE: A3
THIRD ANGLE PROJECTION

molex®

2.54MM PITCH
DUAL ROW HEADER SINGLE WAFER, T/H

PRODUCT CUSTOMER DRAWING

SERIES: 87914
MATERIAL NUMBER: SEE TABLE
CUSTOMER: GENERAL MARKET

DOCUMENT NUMBER: SD-87914-013
DOC TYPE: PSD
DOC PART: 000
SHEET NUMBER: 42 OF 45

RELEASE STATUS
RELEASE DATE

FORMAT: Met-lega-master-tb-prod-A3
REVISION: C
DATE: 2016/02/04

PART NO FOR BULK PACKAGING	PART NO. FOR TUBE WITHOUT CAP PACKAGING	PART NO. FOR TUBE WITH CAP PACKAGING	PART NO. FOR TAPE & REEL WITHOUT CAP PACKAGING	PART NO. FOR TAPE & REEL WITH CAP PACKAGING	CKT SIZE	VOID POSITION	PLATING TYPE	DIMENSION				
								A	B	F	M	P
87914-7611	-------	-------	-------	-------	76	-------	1	96.52	93.98	10.92	5.84	2.79
87914-7621	-------	-------	-------	-------	76	-------	1	96.52	93.98	12.25	7.00	2.96
87914-7612	-------	-------	-------	-------	76	-------	2	96.52	93.98	10.92	5.84	2.79
87914-7622	-------	-------	-------	-------	76	-------	2	96.52	93.98	12.25	7.00	2.96
87914-7613	-------	-------	-------	-------	76	-------	3	96.52	93.98	10.92	5.84	2.79
87914-7623	-------	-------	-------	-------	76	-------	3	96.52	93.98	12.25	7.00	2.96
87914-7614	-------	-------	-------	-------	76	-------	4	96.52	93.98	10.92	5.84	2.79
87914-7624	-------	-------	-------	-------	76	-------	4	96.52	93.98	12.25	7.00	2.96
87914-7615	-------	-------	-------	-------	76	-------	5	96.52	93.98	10.92	5.84	2.79
87914-7625	-------	-------	-------	-------	76	-------	5	96.52	93.98	12.25	7.00	2.96
87914-7616	-------	-------	-------	-------	76	-------	6	96.52	93.98	10.92	5.84	2.79
87914-7626	-------	-------	-------	-------	76	-------	6	96.52	93.98	12.25	7.00	2.96

THIS DRAWING CONTAINS INFORMATION THAT IS PROPRIETARY TO MOLEX ELECTRONIC TECHNOLOGIES, LLC AND SHOULD NOT BE USED WITHOUT WRITTEN PERMISSION

MIGRATED TO NX

EC NO: 114031 2017/03/17
DRWN: FCSOO
CHK'D:
APPR: KHLIM 2017/05/09

D18 REV

GENERAL TOLERANCES (UNLESS SPECIFIED)

	MM	INCH
4 PLACES	±	±
3 PLACES	±	±
2 PLACES	± 0.2	±
1 PLACES	±	±
0 PLACES	±	±

ANGULAR TOL ± 3.0

DRAFT WHERE APPLICABLE MUST REMAIN WITHIN DIMENSIONS

DIMENSION UNITS: MM
SCALE: NTS

DRWN BY: KCHO DATE: 2004/11/05
CHK'D BY: PTLIM DATE: 2004/12/08
APPR BY: MLONG DATE: 2010/09/06

DRAWING SIZE: A3
THIRD ANGLE PROJECTION

molex®

2.54MM PITCH
DUAL ROW HEADER SINGLE WAFER, T/H

PRODUCT CUSTOMER DRAWING

SERIES	MATERIAL NUMBER	CUSTOMER
87914	SEE TABLE	GENERAL MARKET

DOCUMENT NUMBER	DOC TYPE	DOC PART	SHEET NUMBER
SD-87914-013	PSD	000	43 OF 45

RELEASE STATUS | RELEASE DATE

FORMAT: Met-lega-master-tb-prod-A3
REVISION: C
DATE: 2016/02/04

PART NO FOR BULK PACKAGING	PART NO. FOR TUBE WITHOUT CAP PACKAGING	PART NO. FOR TUBE WITH CAP PACKAGING	PART NO. FOR TAPE & REEL WITHOUT CAP PACKAGING	PART NO. FOR TAPE & REEL WITH CAP PACKAGING	CKT SIZE	VOID POSITION	PLATING TYPE	DIMENSION				
								A	B	F	M	P
87914-7811	-------	-------	-------	-------	78	-------	1	99.06	96.52	10.92	5.84	2.79
87914-7821	-------	-------	-------	-------	78	-------	1	99.06	96.52	12.25	7.00	2.96
87914-7812	-------	-------	-------	-------	78	-------	2	99.06	96.52	10.92	5.84	2.79
87914-7822	-------	-------	-------	-------	78	-------	2	99.06	96.52	12.25	7.00	2.96
87914-7813	-------	-------	-------	-------	78	-------	3	99.06	96.52	10.92	5.84	2.79
87914-7823	-------	-------	-------	-------	78	-------	3	99.06	96.52	12.25	7.00	2.96
87914-7814	-------	-------	-------	-------	78	-------	4	99.06	96.52	10.92	5.84	2.79
87914-7824	-------	-------	-------	-------	78	-------	4	99.06	96.52	12.25	7.00	2.96
87914-7815	-------	-------	-------	-------	78	-------	5	99.06	96.52	10.92	5.84	2.79
87914-7825	-------	-------	-------	-------	78	-------	5	99.06	96.52	12.25	7.00	2.96
87914-7816	-------	-------	-------	-------	78	-------	6	99.06	96.52	10.92	5.84	2.79
87914-7826	-------	-------	-------	-------	78	-------	6	99.06	96.52	12.25	7.00	2.96

THIS DRAWING CONTAINS INFORMATION THAT IS PROPRIETARY TO MOLEX ELECTRONIC TECHNOLOGIES, LLC AND SHOULD NOT BE USED WITHOUT WRITTEN PERMISSION

MIGRATED TO NX

EC NO: 114031 2017/03/17
DRWN: FCSOO
CHK'D: KHLIM 2017/05/09
APPR:

D18 REV

GENERAL TOLERANCES (UNLESS SPECIFIED)

	MM	INCH
4 PLACES	±	±
3 PLACES	±	±
2 PLACES	± 0.2	±
1 PLACES	±	±
0 PLACES	±	±

ANGULAR TOL ± 3.0

DRAFT WHERE APPLICABLE MUST REMAIN WITHIN DIMENSIONS

DIMENSION UNITS: MM
SCALE: NTS

DRWN BY: KCHO DATE: 2004/11/05
CHK'D BY: PTLIM DATE: 2004/12/08
APPR BY: MLONG DATE: 2010/09/06

DRAWING SIZE: A3
THIRD ANGLE PROJECTION

molex®

2.54MM PITCH
DUAL ROW HEADER SINGLE WAFER, T/H

PRODUCT CUSTOMER DRAWING

SERIES: 87914
MATERIAL NUMBER: SEE TABLE
CUSTOMER: GENERAL MARKET

DOCUMENT NUMBER: SD-87914-013
DOC TYPE: PSD
DOC PART: 000
SHEET NUMBER: 44 OF 45

RELEASE STATUS
RELEASE DATE

FORMAT: Met-lega-master-tb-prod-A3
REVISION: C
DATE: 2016/02/04

PART NO FOR BULK PACKAGING	PART NO. FOR TUBE WITHOUT CAP PACKAGING	PART NO. FOR TUBE WITH CAP PACKAGING	PART NO. FOR TAPE & REEL WITHOUT CAP PACKAGING	PART NO. FOR TAPE & REEL WITH CAP PACKAGING	CKT SIZE	VOID POSITION	PLATING TYPE	DIMENSION				
								A	B	F	M	P
87914-8011	-------	-------	-------	-------	80	-------	1	101.60	99.06	10.92	5.84	2.79
87914-8021	-------	-------	-------	-------	80	-------	1	101.60	99.06	12.25	7.00	2.96
87914-8012	-------	-------	-------	-------	80	-------	2	101.60	99.06	10.92	5.84	2.79
87914-8022	-------	-------	-------	-------	80	-------	2	101.60	99.06	12.25	7.00	2.96
87914-8013	-------	-------	-------	-------	80	-------	3	101.60	99.06	10.92	5.84	2.79
87914-8023	-------	-------	-------	-------	80	-------	3	101.60	99.06	12.25	7.00	2.96
87914-8014	-------	-------	-------	-------	80	-------	4	101.60	99.06	10.92	5.84	2.79
87914-8024	-------	-------	-------	-------	80	-------	4	101.60	99.06	12.25	7.00	2.96
87914-8015	-------	-------	-------	-------	80	-------	5	101.60	99.06	10.92	5.84	2.79
87914-8025	-------	-------	-------	-------	80	-------	5	101.60	99.06	12.25	7.00	2.96
87914-8016	-------	-------	-------	-------	80	-------	6	101.60	99.06	10.92	5.84	2.79
87914-8026	-------	-------	-------	-------	80	-------	6	101.60	99.06	12.25	7.00	2.96

THIS DRAWING CONTAINS INFORMATION THAT IS PROPRIETARY TO MOLEX ELECTRONIC TECHNOLOGIES, LLC AND SHOULD NOT BE USED WITHOUT WRITTEN PERMISSION

MIGRATED TO NX

EC NO: 114031 2017/03/17
DRWN: FCSOO
CHK'D: 2017/05/09
APPR: KHLIM

D18 REV

GENERAL TOLERANCES (UNLESS SPECIFIED)

	MM	INCH
4 PLACES	±	±
3 PLACES	±	±
2 PLACES	± 0.2	±
1 PLACES	±	±
0 PLACES	±	±

ANGULAR TOL ± 3.0

DRAFT WHERE APPLICABLE MUST REMAIN WITHIN DIMENSIONS

DIMENSION UNITS: MM
SCALE: NTS

DRWN BY: KCHO DATE: 2004/11/05
CHK'D BY: PTLIM DATE: 2004/12/08
APPR BY: MLONG DATE: 2010/09/06

DRAWING SIZE: A3
THIRD ANGLE PROJECTION

molex®

2.54MM PITCH
DUAL ROW HEADER SINGLE WAFER, T/H

PRODUCT CUSTOMER DRAWING

SERIES: 87914
MATERIAL NUMBER: SEE TABLE
CUSTOMER: GENERAL MARKET

DOCUMENT NUMBER: SD-87914-013
DOC TYPE: PSD
DOC PART: 000
SHEET NUMBER: 45 OF 45

RELEASE STATUS
RELEASE DATE

FORMAT: Met-lega-master-tb-prod-A3
REVISION: C
DATE: 2016/02/04

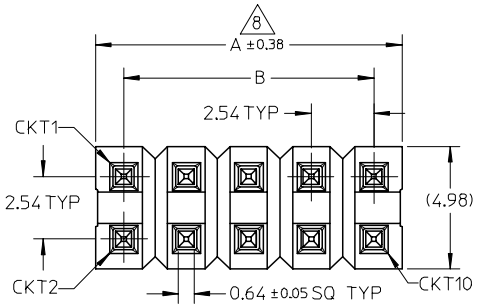

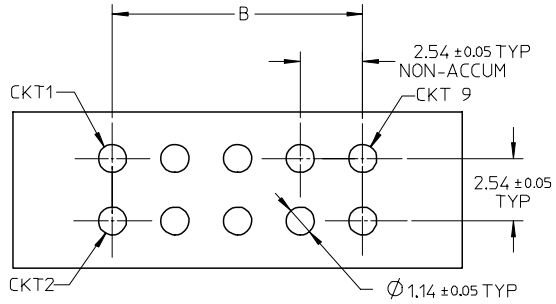

RECOMMENDED PCB LAYOUT

NOTES:

1. MATERIAL:
   HSG: LCP, GLASS-FILLED, UL94V-0,
   COLOR: BLACK
   PIN: 0.64MM SQ PIN, COPPER ALLOY

2. PLATING TYPE:
   (1) : 0.381 μm MIN. GOLD PLATE ON CONTACT AND 1.905 μm MIN. TIN ON SOLDERTAIL OVER 1.270 μm MIN. NICKEL OVERALL.
   (2) : 0.762 μm MIN. GOLD PLATE ON CONTACT AND 1.905 μm MIN. TIN ON SOLDERTAIL OVER 1.270 μm MIN. NICKEL OVERALL.
   (3) : 2.540 μm MIN. TIN IN SELECTED AREA OVER 1.270 μm MIN. NICKEL OVERALL.

3. THE ABOVE 10 CKT IS FOR ILLUSTRATION PURPOSE ONLY.
4. FOR PACKAGING OPTION PLEASE REFER TO THE TABLE.
5. RECOMMENDED PCB THICKNESS 1.60MM.
6. PRODUCT SPECIFICATION: PS-87920-019
7. WAFER TO BE FLAT WITHIN 0.003mm/mm
8. IRREGULAR CIRCUIT CUTOFF WITHIN BREAKAWAY SECTION IS PERMISSIBLE. CUTTING OR CHIPPING OF THE MAIN BODY IS NOT ACCEPTABLE.
9. PARTS ARE NOT STACKABLE ON 2.54 CENTER
10. PACKAGING SPECIFICATION:
    TRAY: PK-89990-489
    BULK: PK-89990-491

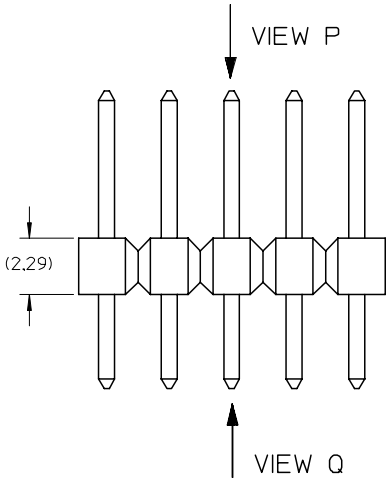

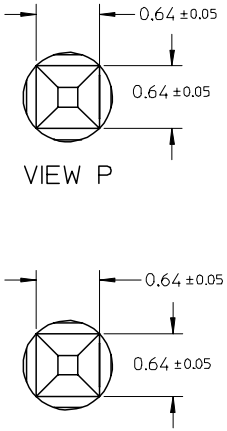

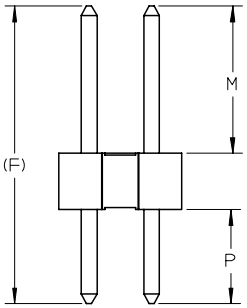

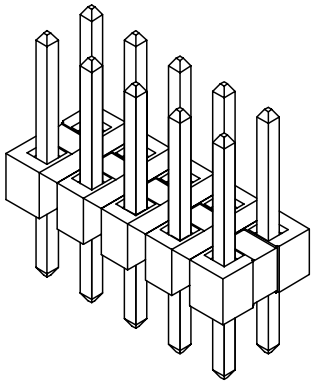

EWR# 1010 & 1021			
EC NO: S2007-0182			
DRWN:SKLIM01	2006/09/11		
CHKD:CWLAM	2006/09/12		
APPR:KWLEE	2006/09/13		
A		REV	DESCRIPTION

QUALITY SYMBOLS
▼=0
▽C=0

GENERAL TOLERANCES (UNLESS SPECIFIED)

	mm	INCH
4 PLACES	± ---	± ---
3 PLACES	± ---	± ---
2 PLACES	± 0.2	± ---
1 PLACE	± ---	± ---
ANGULAR ± 3 °		

DRAFT WHERE APPLICABLE MUST REMAIN WITHIN DIMENSIONS

DIMENSION STYLE: MM ONLY	SCALE: NTS	DESIGN UNITS: METRIC	THIRD ANGLE PROJECTION
DRAWN BY: SKLIM01	DATE: 2006/08/21	TITLE: CUSTOM HEADER C-GRID,SINGLE WAFER HDR, THROU HOLE,VERTICAL, LF	
CHECKED BY: CWLAM	DATE: 2006/09/04		
APPROVED BY: KWLEE	DATE: 2006/09/04	molex MOLEX INCORPORATED	
MATERIAL NO.: SEE TABLE		DOCUMENT NO.: SD-87914-059	SHEET NO.: 1 OF 9
SIZE: A3	THIS DRAWING CONTAINS INFORMATION THAT IS PROPRIETARY TO MOLEX INCORPORATED AND SHOULD NOT BE USED WITHOUT WRITTEN PERMISSION		

PART NO FOR TRAY PACKAGING	PART NO FOR BULK PACKAGING	CKT SIZE	PLATING TYPE	DIMENSION				
							MATING END	SOLDER TAIL
				A	B	F	M	P
87914-0401	-------	4	1	5.08	2.54	13.21	8.13	2.79
87914-0402	-------	4	2	5.08	2.54	13.21	8.13	2.79
87914-0403	-------	4	3	5.08	2.54	13.21	8.13	2.79
87914-0601	-------	6	1	7.62	5.08	13.21	8.13	2.79
87914-0602	-------	6	2	7.62	5.08	13.21	8.13	2.79
87914-0603	-------	6	3	7.62	5.08	13.21	8.13	2.79
87914-0801	-------	8	1	10.16	7.62	13.21	8.13	2.79
87914-0802	-------	8	2	10.16	7.62	13.21	8.13	2.79
87914-0803	-------	8	3	10.16	7.62	13.21	8.13	2.79
87914-1001	-------	10	1	12.70	10.16	13.21	8.13	2.79
87914-1002	-------	10	2	12.70	10.16	13.21	8.13	2.79
87914-1003	-------	10	3	12.70	10.16	13.21	8.13	2.79

PART NO FOR TRAY PACKAGING	PART NO FOR BULK PACKAGING	CKT SIZE	PLATING TYPE	DIMENSION				
							MATING END	SOLDER TAIL
				A	B	F	M	P
87914-0204	-------	2	1	2.54	---	11.11	6.10	2.72
87914-0205	-------	2	2	2.54	---	11.11	6.10	2.72
87914-0206	-------	2	3	2.54	---	11.11	6.10	2.72
87914-0404	-------	4	1	5.08	2.54	11.11	6.10	2.72
87914-0405	-------	4	2	5.08	2.54	11.11	6.10	2.72
87914-0406	-------	4	3	5.08	2.54	11.11	6.10	2.72
87914-0604	-------	6	1	7.62	5.08	11.11	6.10	2.72
87914-0605	-------	6	2	7.62	5.08	11.11	6.10	2.72
87914-0606	-------	6	3	7.62	5.08	11.11	6.10	2.72
87914-0804	-------	8	1	10.16	7.62	11.11	6.10	2.72
87914-0805	-------	8	2	10.16	7.62	11.11	6.10	2.72
87914-0806	-------	8	3	10.16	7.62	11.11	6.10	2.72
87914-1004	-------	10	1	12.70	10.16	11.11	6.10	2.72
87914-1005	-------	10	2	12.70	10.16	11.11	6.10	2.72
87914-1006	-------	10	3	12.70	10.16	11.11	6.10	2.72

EWR# 1010 & 1021
EC NO: S2007-0182
DRWN:SKLIM01 2006/09/11
CHKD:CWLAM 2006/09/12
APPR:KWLEE 2006/09/13
DESCRIPTION
A
REV

QUALITY SYMBOLS
▼=0
▽C=0

GENERAL TOLERANCES (UNLESS SPECIFIED)

	mm	INCH
4 PLACES	± ---	± ---
3 PLACES	± ---	± ---
2 PLACES	± 0.2	± ---
1 PLACE	± ---	± ---

ANGULAR ± 3 °

DRAFT WHERE APPLICABLE MUST REMAIN WITHIN DIMENSIONS

DIMENSION STYLE: MM ONLY
SCALE: NTS
DESIGN UNITS: METRIC
THIRD ANGLE PROJECTION

DRAWN BY: SKLIM01 DATE: 2006/08/21
CHECKED BY: CWLAM DATE: 2006/09/04
APPROVED BY: KWLEE DATE: 2006/09/04
MATERIAL NO.: SEE TABLE

TITLE: CUSTOM HEADER C-GRID,SINGLE WAFER HDR, THROU HOLE,VERTICAL, LF

molex MOLEX INCORPORATED

DOCUMENT NO.: SD-87914-059
SHEET NO.: 2 OF 9

SIZE: A3

THIS DRAWING CONTAINS INFORMATION THAT IS PROPRIETARY TO MOLEX INCORPORATED AND SHOULD NOT BE USED WITHOUT WRITTEN PERMISSION

PART NO FOR TRAY PACKAGING	PART NO FOR BULK PACKAGING	CKT SIZE	PLATING TYPE	DIMENSION				
							MATING END	SOLDER TAIL
				A	B	F	M	P
87914-1201	-------	12	1	15.24	12.70	13.21	8.13	2.79
87914-1202	-------	12	2	15.24	12.70	13.21	8.13	2.79
87914-1203	-------	12	3	15.24	12.70	13.21	8.13	2.79
87914-1401	-------	14	1	17.78	15.24	13.21	8.13	2.79
87914-1402	-------	14	2	17.78	15.24	13.21	8.13	2.79
87914-1403	-------	14	3	17.78	15.24	13.21	8.13	2.79
87914-1601	-------	16	1	20.32	17.78	13.21	8.13	2.79
87914-1602	-------	16	2	20.32	17.78	13.21	8.13	2.79
87914-1603	-------	16	3	20.32	17.78	13.21	8.13	2.79
87914-1801	-------	18	1	22.86	20.32	13.21	8.13	2.79
87914-1802	-------	18	2	22.86	20.32	13.21	8.13	2.79
87914-1803	-------	18	3	22.86	20.32	13.21	8.13	2.79
87914-2001	-------	20	1	25.40	22.86	13.21	8.13	2.79
87914-2002	-------	20	2	25.40	22.86	13.21	8.13	2.79
87914-2003	-------	20	3	25.40	22.86	13.21	8.13	2.79

PART NO FOR TRAY PACKAGING	PART NO FOR BULK PACKAGING	CKT SIZE	PLATING TYPE	DIMENSION				
							MATING END	SOLDER TAIL
				A	B	F	M	P
87914-1204	-------	12	1	15.24	12.70	11.11	6.10	2.72
87914-1205	-------	12	2	15.24	12.70	11.11	6.10	2.72
87914-1206	-------	12	3	15.24	12.70	11.11	6.10	2.72
87914-1404	-------	14	1	17.78	15.24	11.11	6.10	2.72
87914-1405	-------	14	2	17.78	15.24	11.11	6.10	2.72
87914-1406	-------	14	3	17.78	15.24	11.11	6.10	2.72
87914-1604	-------	16	1	20.32	17.78	11.11	6.10	2.72
87914-1605	-------	16	2	20.32	17.78	11.11	6.10	2.72
87914-1606	-------	16	3	20.32	17.78	11.11	6.10	2.72
87914-1804	-------	18	1	22.86	20.32	11.11	6.10	2.72
87914-1805	-------	18	2	22.86	20.32	11.11	6.10	2.72
87914-1806	-------	18	3	22.86	20.32	11.11	6.10	2.72
87914-2004	-------	20	1	25.40	22.86	11.11	6.10	2.72
87914-2005	-------	20	2	25.40	22.86	11.11	6.10	2.72
87914-2006	-------	20	3	25.40	22.86	11.11	6.10	2.72

EWR# 1010 & 1021
EC NO: S2007-0182
DRWN:SKLIM01 2006/09/11
CHKD:CWLAM 2006/09/12
APPR:KWLEE 2006/09/13
A
REV DESCRIPTION

QUALITY SYMBOLS
▼=0
▽C=0

GENERAL TOLERANCES (UNLESS SPECIFIED)

	mm	INCH
4 PLACES	± ---	± ---
3 PLACES	± ---	± ---
2 PLACES	± 0.2	± ---
1 PLACE	± ---	± ---

ANGULAR ± 3 °

DRAFT WHERE APPLICABLE MUST REMAIN WITHIN DIMENSIONS

DIMENSION STYLE: MM ONLY
SCALE: NTS
DESIGN UNITS: METRIC
THIRD ANGLE PROJECTION

DRAWN BY: SKLIM01 DATE: 2006/08/21
CHECKED BY: CWLAM DATE: 2006/09/04
APPROVED BY: KWLEE DATE: 2006/09/04

TITLE: CUSTOM HEADER C-GRID,SINGLE WAFER HDR, THROU HOLE,VERTICAL, LF

molex MOLEX INCORPORATED

MATERIAL NO.: SEE TABLE
DOCUMENT NO.: SD-87914-059
SHEET NO.: 3 OF 9
SIZE: A3

THIS DRAWING CONTAINS INFORMATION THAT IS PROPRIETARY TO MOLEX INCORPORATED AND SHOULD NOT BE USED WITHOUT WRITTEN PERMISSION

PART NO FOR TRAY PACKAGING	PART NO FOR BULK PACKAGING	CKT SIZE	PLATING TYPE	DIMENSION				
							MATING END	SOLDER TAIL
				A	B	F	M	P
87914-2201	-------	22	1	27.94	25.40	13.21	8.13	2.79
87914-2202	-------	22	2	27.94	25.40	13.21	8.13	2.79
87914-2203	-------	22	3	27.94	25.40	13.21	8.13	2.79
87914-2401	-------	24	1	30.48	27.94	13.21	8.13	2.79
87914-2402	-------	24	2	30.48	27.94	13.21	8.13	2.79
87914-2403	-------	24	3	30.48	27.94	13.21	8.13	2.79
87914-2601	-------	26	1	33.02	30.48	13.21	8.13	2.79
87914-2602	-------	26	2	33.02	30.48	13.21	8.13	2.79
87914-2603	-------	26	3	33.02	30.48	13.21	8.13	2.79
87914-2801	-------	28	1	35.56	33.02	13.21	8.13	2.79
87914-2802	-------	28	2	35.56	33.02	13.21	8.13	2.79
87914-2803	-------	28	3	35.56	33.02	13.21	8.13	2.79
87914-3001	-------	30	1	38.10	35.56	13.21	8.13	2.79
87914-3002	-------	30	2	38.10	35.56	13.21	8.13	2.79
87914-3003	-------	30	3	38.10	35.56	13.21	8.13	2.79

PART NO FOR TRAY PACKAGING	PART NO FOR BULK PACKAGING	CKT SIZE	PLATING TYPE	DIMENSION				
							MATING END	SOLDER TAIL
				A	B	F	M	P
87914-2204	-------	22	1	27.94	25.40	11.11	6.10	2.72
87914-2205	-------	22	2	27.94	25.40	11.11	6.10	2.72
87914-2206	-------	22	3	27.94	25.40	11.11	6.10	2.72
87914-2404	-------	24	1	30.48	27.94	11.11	6.10	2.72
87914-2405	-------	24	2	30.48	27.94	11.11	6.10	2.72
87914-2406	-------	24	3	30.48	27.94	11.11	6.10	2.72
87914-2604	-------	26	1	33.02	30.48	11.11	6.10	2.72
87914-2605	-------	26	2	33.02	30.48	11.11	6.10	2.72
87914-2606	-------	26	3	33.02	30.48	11.11	6.10	2.72
87914-2804	-------	28	1	35.56	33.02	11.11	6.10	2.72
87914-2805	-------	28	2	35.56	33.02	11.11	6.10	2.72
87914-2806	-------	28	3	35.56	33.02	11.11	6.10	2.72
87914-3004	-------	30	1	38.10	35.56	11.11	6.10	2.72
87914-3005	-------	30	2	38.10	35.56	11.11	6.10	2.72
87914-3006	-------	30	3	38.10	35.56	11.11	6.10	2.72

EWR# 1010 & 1021
EC NO: S2007-0182
DRWN:SKLIM01 2006/09/11
CHKD:CWLAM 2006/09/12
APPR:KWLEE 2006/09/13
DESCRIPTION
A
REV

QUALITY SYMBOLS
▼=0
▽C=0

GENERAL TOLERANCES (UNLESS SPECIFIED)

	mm	INCH
4 PLACES	± ---	± ---
3 PLACES	± ---	± ---
2 PLACES	± 0.2	± ---
1 PLACE	± ---	± ---

ANGULAR ± 3 °

DRAFT WHERE APPLICABLE MUST REMAIN WITHIN DIMENSIONS

DIMENSION STYLE: MM ONLY
SCALE: NTS
DESIGN UNITS: METRIC
THIRD ANGLE PROJECTION

DRAWN BY: SKLIM01 DATE: 2006/08/21
CHECKED BY: CWLAM DATE: 2006/09/04
APPROVED BY: KWLEE DATE: 2006/09/04
MATERIAL NO.: SEE TABLE

TITLE: CUSTOM HEADER C-GRID,SINGLE WAFER HDR, THROU HOLE,VERTICAL, LF

molex MOLEX INCORPORATED

DOCUMENT NO.: SD-87914-059
SHEET NO.: 4 OF 9

SIZE: A3

THIS DRAWING CONTAINS INFORMATION THAT IS PROPRIETARY TO MOLEX INCORPORATED AND SHOULD NOT BE USED WITHOUT WRITTEN PERMISSION

PART NO FOR TRAY PACKAGING	PART NO FOR BULK PACKAGING	CKT SIZE	PLATING TYPE	DIMENSION				
							MATING END	SOLDER TAIL
				A	B	F	M	P
87914-3201	-------	32	1	40.64	38.10	13.21	8.13	2.79
87914-3202	-------	32	2	40.64	38.10	13.21	8.13	2.79
87914-3203	-------	32	3	40.64	38.10	13.21	8.13	2.79
87914-3401	-------	34	1	43.18	40.64	13.21	8.13	2.79
87914-3402	-------	34	2	43.18	40.64	13.21	8.13	2.79
87914-3403	-------	34	3	43.18	40.64	13.21	8.13	2.79
87914-3601	-------	36	1	45.72	43.18	13.21	8.13	2.79
87914-3602	-------	36	2	45.72	43.18	13.21	8.13	2.79
87914-3603	-------	36	3	45.72	43.18	13.21	8.13	2.79
87914-3801	-------	38	1	48.26	45.72	13.21	8.13	2.79
87914-3802	-------	38	2	48.26	45.72	13.21	8.13	2.79
87914-3803	-------	38	3	48.26	45.72	13.21	8.13	2.79
87914-4001	-------	40	1	50.80	48.26	13.21	8.13	2.79
87914-4002	-------	40	2	50.80	48.26	13.21	8.13	2.79
87914-4003	-------	40	3	50.80	48.26	13.21	8.13	2.79

PART NO FOR TRAY PACKAGING	PART NO FOR BULK PACKAGING	CKT SIZE	PLATING TYPE	DIMENSION				
							MATING END	SOLDER TAIL
				A	B	F	M	P
87914-3204	-------	32	1	40.64	38.10	11.11	6.10	2.72
87914-3205	-------	32	2	40.64	38.10	11.11	6.10	2.72
87914-3206	-------	32	3	40.64	38.10	11.11	6.10	2.72
87914-3404	-------	34	1	43.18	40.64	11.11	6.10	2.72
87914-3405	-------	34	2	43.18	40.64	11.11	6.10	2.72
87914-3406	-------	34	3	43.18	40.64	11.11	6.10	2.72
87914-3604	-------	36	1	45.72	43.18	11.11	6.10	2.72
87914-3605	-------	36	2	45.72	43.18	11.11	6.10	2.72
87914-3606	-------	36	3	45.72	43.18	11.11	6.10	2.72
87914-3804	-------	38	1	48.26	45.72	11.11	6.10	2.72
87914-3805	-------	38	2	48.26	45.72	11.11	6.10	2.72
87914-3806	-------	38	3	48.26	45.72	11.11	6.10	2.72
87914-4004	-------	40	1	50.80	48.26	11.11	6.10	2.72
87914-4005	-------	40	2	50.80	48.26	11.11	6.10	2.72
87914-4006	-------	40	3	50.80	48.26	11.11	6.10	2.72

EWR# 1010 & 1021
EC NO: S2007-0182
DRWN:SKLIM01 2006/09/11
CH'KD:CWLAM 2006/09/12
APPR:KWLEE 2006/09/13
A
REV DESCRIPTION

QUALITY SYMBOLS
▼=0
▽C=0

GENERAL TOLERANCES (UNLESS SPECIFIED)

	mm	INCH
4 PLACES	± ---	± ---
3 PLACES	± ---	± ---
2 PLACES	± 0.2	± ---
1 PLACE	± ---	± ---

ANGULAR ± 3 °

DRAFT WHERE APPLICABLE MUST REMAIN WITHIN DIMENSIONS

DIMENSION STYLE: MM ONLY
SCALE: NTS
DESIGN UNITS: METRIC
THIRD ANGLE PROJECTION

DRAWN BY: SKLIM01 DATE: 2006/08/21
CHECKED BY: CWLAM DATE: 2006/09/04
APPROVED BY: KWLEE DATE: 2006/09/04

TITLE: CUSTOM HEADER C-GRID,SINGLE WAFER HDR, THROU HOLE,VERTICAL, LF

molex MOLEX INCORPORATED

MATERIAL NO.: SEE TABLE
DOCUMENT NO.: SD-87914-059
SHEET NO.: 5 OF 9
SIZE: A3

THIS DRAWING CONTAINS INFORMATION THAT IS PROPRIETARY TO MOLEX INCORPORATED AND SHOULD NOT BE USED WITHOUT WRITTEN PERMISSION

PART NO FOR TRAY PACKAGING	PART NO FOR BULK PACKAGING	CKT SIZE	PLATING TYPE	DIMENSION				
							MATING END	SOLDER TAIL
				A	B	F	M	P
87914-4201	-------	42	1	53.34	50.80	13.21	8.13	2.79
87914-4202	-------	42	2	53.34	50.80	13.21	8.13	2.79
87914-4203	-------	42	3	53.34	50.80	13.21	8.13	2.79
87914-4401	-------	44	1	55.88	53.34	13.21	8.13	2.79
87914-4402	-------	44	2	55.88	53.34	13.21	8.13	2.79
87914-4403	-------	44	3	55.88	53.34	13.21	8.13	2.79
87914-4601	-------	46	1	58.42	55.88	13.21	8.13	2.79
87914-4602	-------	46	2	58.42	55.88	13.21	8.13	2.79
87914-4603	-------	46	3	58.42	55.88	13.21	8.13	2.79
87914-4801	-------	48	1	60.96	58.42	13.21	8.13	2.79
87914-4802	-------	48	2	60.96	58.42	13.21	8.13	2.79
87914-4803	-------	48	3	60.96	58.42	13.21	8.13	2.79
87914-5001	-------	50	1	63.50	60.96	13.21	8.13	2.79
87914-5002	-------	50	2	63.50	60.96	13.21	8.13	2.79
87914-5003	-------	50	3	63.50	60.96	13.21	8.13	2.79

PART NO FOR TRAY PACKAGING	PART NO FOR BULK PACKAGING	CKT SIZE	PLATING TYPE	DIMENSION				
							MATING END	SOLDER TAIL
				A	B	F	M	P
87914-4204	-------	42	1	53.34	50.80	11.11	6.10	2.72
87914-4205	-------	42	2	53.34	50.80	11.11	6.10	2.72
87914-4206	-------	42	3	53.34	50.80	11.11	6.10	2.72
87914-4404	-------	44	1	55.88	53.34	11.11	6.10	2.72
87914-4405	-------	44	2	55.88	53.34	11.11	6.10	2.72
87914-4406	-------	44	3	55.88	53.34	11.11	6.10	2.72
87914-4604	-------	46	1	58.42	55.88	11.11	6.10	2.72
87914-4605	-------	46	2	58.42	55.88	11.11	6.10	2.72
87914-4606	-------	46	3	58.42	55.88	11.11	6.10	2.72
87914-4804	-------	48	1	60.96	58.42	11.11	6.10	2.72
87914-4805	-------	48	2	60.96	58.42	11.11	6.10	2.72
87914-4806	-------	48	3	60.96	58.42	11.11	6.10	2.72
87914-5004	-------	50	1	63.50	60.96	11.11	6.10	2.72
87914-5005	-------	50	2	63.50	60.96	11.11	6.10	2.72
87914-5006	-------	50	3	63.50	60.96	11.11	6.10	2.72

EWR# 1010 & 1021
EC NO: S2007-0182
DRWN:SKLIM01 2006/09/11
CHKD:CWLAM 2006/09/12
APPR:KWLEE 2006/09/13
DESCRIPTION
A
REV

QUALITY SYMBOLS
▼=0
▽C=0

GENERAL TOLERANCES (UNLESS SPECIFIED)

	mm	INCH
4 PLACES	± ---	± ---
3 PLACES	± ---	± ---
2 PLACES	± 0.2	± ---
1 PLACE	± ---	± ---

ANGULAR ± 3 °

DRAFT WHERE APPLICABLE MUST REMAIN WITHIN DIMENSIONS

DIMENSION STYLE: MM ONLY
SCALE: NTS
DESIGN UNITS: METRIC
THIRD ANGLE PROJECTION

DRAWN BY: SKLIM01 DATE: 2006/08/21
CHECKED BY: CWLAM DATE: 2006/09/04
APPROVED BY: KWLEE DATE: 2006/09/04
MATERIAL NO.: SEE TABLE

TITLE: CUSTOM HEADER C-GRID,SINGLE WAFER HDR, THROU HOLE,VERTICAL, LF

molex MOLEX INCORPORATED

DOCUMENT NO.: SD-87914-059
SHEET NO.: 6 OF 9

SIZE: A3

THIS DRAWING CONTAINS INFORMATION THAT IS PROPRIETARY TO MOLEX INCORPORATED AND SHOULD NOT BE USED WITHOUT WRITTEN PERMISSION

PART NO FOR TRAY PACKAGING	PART NO FOR BULK PACKAGING	CKT SIZE	PLATING TYPE	DIMENSION				
							MATING END	SOLDER TAIL
				A	B	F	M	P
-------	87914-5201	52	1	66.04	63.50	13.21	8.13	2.79
-------	87914-5202	52	2	66.04	63.50	13.21	8.13	2.79
-------	87914-5203	52	3	66.04	63.50	13.21	8.13	2.79
-------	87914-5401	54	1	68.58	66.04	13.21	8.13	2.79
-------	87914-5402	54	2	68.58	66.04	13.21	8.13	2.79
-------	87914-5403	54	3	68.58	66.04	13.21	8.13	2.79
-------	87914-5601	56	1	71.12	68.58	13.21	8.13	2.79
-------	87914-5602	56	2	71.12	68.58	13.21	8.13	2.79
-------	87914-5603	56	3	71.12	68.58	13.21	8.13	2.79
-------	87914-5801	58	1	73.66	71.12	13.21	8.13	2.79
-------	87914-5802	58	2	73.66	71.12	13.21	8.13	2.79
-------	87914-5803	58	3	73.66	71.12	13.21	8.13	2.79
-------	87914-6001	60	1	76.20	73.66	13.21	8.13	2.79
-------	87914-6002	60	2	76.20	73.66	13.21	8.13	2.79
-------	87914-6003	60	3	76.20	73.66	13.21	8.13	2.79

PART NO FOR TRAY PACKAGING	PART NO FOR BULK PACKAGING	CKT SIZE	PLATING TYPE	DIMENSION				
							MATING END	SOLDER TAIL
				A	B	F	M	P
-------	87914-5204	52	1	66.04	63.50	11.11	6.10	2.72
-------	87914-5205	52	2	66.04	63.50	11.11	6.10	2.72
-------	87914-5206	52	3	66.04	63.50	11.11	6.10	2.72
-------	87914-5404	54	1	68.58	66.04	11.11	6.10	2.72
-------	87914-5405	54	2	68.58	66.04	11.11	6.10	2.72
-------	87914-5406	54	3	68.58	66.04	11.11	6.10	2.72
-------	87914-5604	56	1	71.12	68.58	11.11	6.10	2.72
-------	87914-5605	56	2	71.12	68.58	11.11	6.10	2.72
-------	87914-5606	56	3	71.12	68.58	11.11	6.10	2.72
-------	87914-5804	58	1	73.66	71.12	11.11	6.10	2.72
-------	87914-5805	58	2	73.66	71.12	11.11	6.10	2.72
-------	87914-5806	58	3	73.66	71.12	11.11	6.10	2.72
-------	87914-6004	60	1	76.20	73.66	11.11	6.10	2.72
-------	87914-6005	60	2	76.20	73.66	11.11	6.10	2.72
-------	87914-6006	60	3	76.20	73.66	11.11	6.10	2.72

EWR# 1010 & 1021
EC NO: S2007-0182
DRWN:SKLIM01 2006/09/11
CHKD:CWLAM 2006/09/12
APPR:KWLEE 2006/09/13
DESCRIPTION
A
REV

QUALITY SYMBOLS
▼=0
(C)=0

GENERAL TOLERANCES (UNLESS SPECIFIED)

	mm	INCH
4 PLACES	± ---	± ---
3 PLACES	± ---	± ---
2 PLACES	± 0.2	± ---
1 PLACE	± ---	± ---

ANGULAR ± 3 °

DRAFT WHERE APPLICABLE MUST REMAIN WITHIN DIMENSIONS

DIMENSION STYLE: MM ONLY
SCALE: NTS
DESIGN UNITS: METRIC
THIRD ANGLE PROJECTION

DRAWN BY: SKLIM01 DATE: 2006/08/21
CHECKED BY: CWLAM DATE: 2006/09/04
APPROVED BY: KWLEE DATE: 2006/09/04
MATERIAL NO.: SEE TABLE

TITLE: CUSTOM HEADER C-GRID,SINGLE WAFER HDR, THROU HOLE,VERTICAL, LF

molex MOLEX INCORPORATED

DOCUMENT NO.: SD-87914-059
SHEET NO.: 7 OF 9

SIZE: A3

THIS DRAWING CONTAINS INFORMATION THAT IS PROPRIETARY TO MOLEX INCORPORATED AND SHOULD NOT BE USED WITHOUT WRITTEN PERMISSION

PART NO FOR TRAY PACKAGING	PART NO FOR BULK PACKAGING	CKT SIZE	PLATING TYPE	DIMENSION				
							MATING END	SOLDER TAIL
				A	B	F	M	P
-------	87914-6201	62	1	78.74	76.20	13.21	8.13	2.79
-------	87914-6202	62	2	78.74	76.20	13.21	8.13	2.79
-------	87914-6203	62	3	78.74	76.20	13.21	8.13	2.79
-------	87914-6401	64	1	81.28	78.74	13.21	8.13	2.79
-------	87914-6402	64	2	81.28	78.74	13.21	8.13	2.79
-------	87914-6403	64	3	81.28	78.74	13.21	8.13	2.79
-------	87914-6601	66	1	83.82	81.28	13.21	8.13	2.79
-------	87914-6602	66	2	83.82	81.28	13.21	8.13	2.79
-------	87914-6603	66	3	83.82	81.28	13.21	8.13	2.79
-------	87914-6801	68	1	86.36	83.82	13.21	8.13	2.79
-------	87914-6802	68	2	86.36	83.82	13.21	8.13	2.79
-------	87914-6803	68	3	86.36	83.82	13.21	8.13	2.79
-------	87914-7001	70	1	88.90	86.36	13.21	8.13	2.79
-------	87914-7002	70	2	88.90	86.36	13.21	8.13	2.79
-------	87914-7003	70	3	88.90	86.36	13.21	8.13	2.79

PART NO FOR TRAY PACKAGING	PART NO FOR BULK PACKAGING	CKT SIZE	PLATING TYPE	DIMENSION				
							MATING END	SOLDER TAIL
				A	B	F	M	P
-------	87914-6204	62	1	78.74	76.20	11.11	6.10	2.72
-------	87914-6205	62	2	78.74	76.20	11.11	6.10	2.72
-------	87914-6206	62	3	78.74	76.20	11.11	6.10	2.72
-------	87914-6404	64	1	81.28	78.74	11.11	6.10	2.72
-------	87914-6405	64	2	81.28	78.74	11.11	6.10	2.72
-------	87914-6406	64	3	81.28	78.74	11.11	6.10	2.72
-------	87914-6604	66	1	83.82	81.28	11.11	6.10	2.72
-------	87914-6605	66	2	83.82	81.28	11.11	6.10	2.72
-------	87914-6606	66	3	83.82	81.28	11.11	6.10	2.72
-------	87914-6804	68	1	86.36	83.82	11.11	6.10	2.72
-------	87914-6805	68	2	86.36	83.82	11.11	6.10	2.72
-------	87914-6806	68	3	86.36	83.82	11.11	6.10	2.72
-------	87914-7004	70	1	88.90	86.36	11.11	6.10	2.72
-------	87914-7005	70	2	88.90	86.36	11.11	6.10	2.72
-------	87914-7006	70	3	88.90	86.36	11.11	6.10	2.72

EWR# 1010 & 1021
EC NO: S2007-0182
DRWN:SKLIM01 2006/09/11
CH'KD:CWLAM 2006/09/12
APPR:KWLEE 2006/09/13
A
REV DESCRIPTION

QUALITY SYMBOLS
▼=0
▽C=0

GENERAL TOLERANCES (UNLESS SPECIFIED)

	mm	INCH
4 PLACES	± ---	± ---
3 PLACES	± ---	± ---
2 PLACES	± 0.2	± ---
1 PLACE	± ---	± ---

ANGULAR ± 3 °

DRAFT WHERE APPLICABLE MUST REMAIN WITHIN DIMENSIONS

DIMENSION STYLE: MM ONLY
SCALE: NTS
DESIGN UNITS: METRIC
THIRD ANGLE PROJECTION

DRAWN BY: SKLIM01 DATE: 2006/08/21
CHECKED BY: CWLAM DATE: 2006/09/04
APPROVED BY: KWLEE DATE: 2006/09/04

TITLE: CUSTOM HEADER C-GRID,SINGLE WAFER HDR, THROU HOLE,VERTICAL, LF

molex MOLEX INCORPORATED

MATERIAL NO.: SEE TABLE
DOCUMENT NO.: SD-87914-059
SHEET NO.: 8 OF 9
SIZE: A3

THIS DRAWING CONTAINS INFORMATION THAT IS PROPRIETARY TO MOLEX INCORPORATED AND SHOULD NOT BE USED WITHOUT WRITTEN PERMISSION

PART NO FOR TRAY PACKAGING	PART NO FOR BULK PACKAGING	CKT SIZE	PLATING TYPE	DIMENSION				
							MATING END	SOLDER TAIL
				A	B	F	M	P
-------	87914-7201	72	1	91.44	88.90	13.21	8.13	2.79
-------	87914-7202	72	2	91.44	88.90	13.21	8.13	2.79
-------	87914-7203	72	3	91.44	88.90	13.21	8.13	2.79
-------	87914-7401	74	1	93.98	91.44	13.21	8.13	2.79
-------	87914-7402	74	2	93.98	91.44	13.21	8.13	2.79
-------	87914-7403	74	3	93.98	91.44	13.21	8.13	2.79
-------	87914-7601	76	1	96.52	93.98	13.21	8.13	2.79
-------	87914-7602	76	2	96.52	93.98	13.21	8.13	2.79
-------	87914-7603	76	3	96.52	93.98	13.21	8.13	2.79
-------	87914-7801	78	1	99.06	96.52	13.21	8.13	2.79
-------	87914-7802	78	2	99.06	96.52	13.21	8.13	2.79
-------	87914-7803	78	3	99.06	96.52	13.21	8.13	2.79
-------	87914-8001	80	1	101.60	99.06	13.21	8.13	2.79
-------	87914-8002	80	2	101.60	99.06	13.21	8.13	2.79
-------	87914-8003	80	3	101.60	99.06	13.21	8.13	2.79

PART NO FOR TRAY PACKAGING	PART NO FOR BULK PACKAGING	CKT SIZE	PLATING TYPE	DIMENSION				
							MATING END	SOLDER TAIL
				A	B	F	M	P
-------	87914-7204	72	1	91.44	88.90	11.11	6.10	2.72
-------	87914-7205	72	2	91.44	88.90	11.11	6.10	2.72
-------	87914-7206	72	3	91.44	88.90	11.11	6.10	2.72
-------	87914-7404	74	1	93.98	91.44	11.11	6.10	2.72
-------	87914-7405	74	2	93.98	91.44	11.11	6.10	2.72
-------	87914-7406	74	3	93.98	91.44	11.11	6.10	2.72
-------	87914-7604	76	1	96.52	93.98	11.11	6.10	2.72
-------	87914-7605	76	2	96.52	93.98	11.11	6.10	2.72
-------	87914-7606	76	3	96.52	93.98	11.11	6.10	2.72
-------	87914-7804	78	1	99.06	96.52	11.11	6.10	2.72
-------	87914-7805	78	2	99.06	96.52	11.11	6.10	2.72
-------	87914-7806	78	3	99.06	96.52	11.11	6.10	2.72
-------	87914-8004	80	1	101.60	99.06	11.11	6.10	2.72
-------	87914-8005	80	2	101.60	99.06	11.11	6.10	2.72
-------	87914-8006	80	3	101.60	99.06	11.11	6.10	2.72

EWR# 1010 & 1021
EC NO: S2007-0182
DRWN:SKLIM01 2006/09/11
CHKD:CWLAM 2006/09/12
APPR:KWLEE 2006/09/13
DESCRIPTION
A
REV

QUALITY SYMBOLS
▼=0
▽C=0

GENERAL TOLERANCES (UNLESS SPECIFIED)

	mm	INCH
4 PLACES	± ---	± ---
3 PLACES	± ---	± ---
2 PLACES	± 0.2	± ---
1 PLACE	± ---	± ---

ANGULAR ± 3 °

DRAFT WHERE APPLICABLE MUST REMAIN WITHIN DIMENSIONS

DIMENSION STYLE: MM ONLY
SCALE: NTS
DESIGN UNITS: METRIC
THIRD ANGLE PROJECTION

DRAWN BY: SKLIM01 DATE: 2006/08/21
CHECKED BY: CWLAM DATE: 2006/09/04
APPROVED BY: KWLEE DATE: 2006/09/04

TITLE: CUSTOM HEADER C-GRID,SINGLE WAFER HDR, THROU HOLE,VERTICAL, LF

molex MOLEX INCORPORATED

MATERIAL NO.: SEE TABLE
DOCUMENT NO.: SD-87914-059
SHEET NO.: 9 OF 9
SIZE: A3

THIS DRAWING CONTAINS INFORMATION THAT IS PROPRIETARY TO MOLEX INCORPORATED AND SHOULD NOT BE USED WITHOUT WRITTEN PERMISSION