molex
one company > a world of innovation

This document was generated on 07/17/2020

PLEASE CHECK WWW.MOLEX.COM FOR LATEST PART INFORMATION

Part Number: 0521170241
Status: Active
Overview: Mizu-P25 Miniature Waterproof Connectors
Description: Mizu-P25 5.00mm Pitch Waterproof Wire-to-Wire Receptacle Housing, 2 Circuits, Black

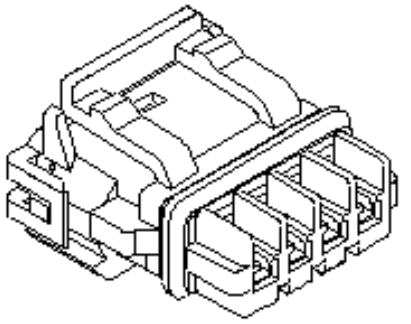

Series image - Reference only

Documents:

- 3D Model
- 3D Model (PDF)
- Drawing (PDF)
- Product Specification PS-52117-007-001 (PDF)
- Application Specification AS-52117-001-001 (PDF)
- Application Specification AS-52117-001-JP-001 (PDF)
- Packaging Specification 521170000-P00 (PDF)
- RoHS Certificate of Compliance (PDF)

Agency Certification	
UL	E29179
Application tooling part link	
Application Tooling Part Link	57131-6000
Application Tooling Part Link	62202-4400
General	
Product Family	Crimp Housings
Series	52117
Application	Signal, Wire-to-Wire
Overview	Mizu-P25 Miniature Waterproof Connectors
Product Name	Mizu-P25 Waterproof, Splash Proof
UPC	800754368636
Physical	
Circuits (maximum)	2
Color - Resin	Black
Gender	Receptacle
Glow-Wire Capable	No
Lock to Mating Part	Yes
Material - Resin	Polyester
Net Weight	824.900/mg
Number of Rows	1
Packaging Type	Tray
Panel Mount	No
Pitch - Mating Interface	5.00mm
Stackable	No
Temperature Range - Operating	-40° to +105°C
Electrical	
Current - Maximum per Contact	3.0A
Solder Process Data	
Lead-freeProcess Capability	N/A
Material Info	
Reference - Drawing Numbers	
Application Specification	AS-52117-001-001, AS-52117-001-JP-001
Packaging Specification	521170000-P00
Product Specification	PS-52117-007-001
Sales Drawing	SD-52117-001-001

EU ELV
Compliant

EU RoHS
Compliant

China RoHS

REACH SVHC
Not Contained Per - D(2020)4578-DC (25 June 2020)

Halogen-Free Status
Not Low-Halogen

For more information, please visit Contact US

China ROHS	Green Image
ELV	Compliant
RoHS Phthalates	Not Contained

Search Parts in this Series
52117 Series

Mates With
52116 Mizu-P25 2.50mm Pitch Waterproof Wire-to-Wire Plug Housing

Use With
50039 Mizu-P25 Crimp Terminal

Application Tooling | **FAQ**

Tooling specifications and manuals are found by selecting the products below. Crimp Height Specifications are then contained in the Application Tooling Specification document.

Global

Description	Product #
Sealing Cap Hand Tool	622024400

Japan

Description	Product #
Sealing Cap Attachment Tool	571316000

This document was generated on 07/17/2020

PLEASE CHECK WWW.MOLEX.COM FOR LATEST PART INFORMATION