This document was generated on 08/03/2016

PLEASE CHECK WWW.MOLEX.COM FOR LATEST PART INFORMATION

Part Number: 1053081216
Status: Active
Overview: Nano-Fit™ Power Connectors
Description: Nano-Fit™ Receptacle Housing, TPA Capable, 2.50mm Pitch, Dual Row, 16 Circuits, Black

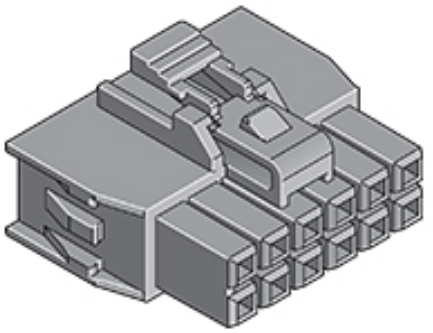

Series image - Reference only

Documents:
3D Model
Drawing (PDF)
Packaging Specification PK-105308-100 (PDF)
RoHS Certificate of Compliance (PDF)

Agency Certification	
CSA	LR19980
UL	E29179
General	
Product Family	Crimp Housings
Series	105308
Application	Power, Wire-to-Board
Comments	Operating temperature is -40#C to +105#C for tin and -40#C to +115#C for gold
Overview	Nano-Fit™ Power Connectors
Product Name	Nano-Fit™
UPC	889056023771
Physical	
Circuits (maximum)	16
Color - Resin	Black
Flammability	94V-0
Gender	Receptacle
Glow-Wire Compliant	No
Keying to Mating Part	Yes
Lock to Mating Part	Yes
Material - Resin	Nylon
Net Weight	1.340/g
Number of Rows	2
Packaging Type	Bag
Panel Mount	No
Pitch - Mating Interface	2.50mm
Pitch - Termination Interface	2.50mm
Polarized to Mating Part	Yes
Temperature Range - Operating	-40°C to +105°C, -40°C to +115°C
Electrical	
Current - Maximum per Contact	6.5A
Material Info	
Reference - Drawing Numbers	
Packaging Specification	PK-105308-100
Sales Drawing	SD-105308-100

EU ELV
Not Relevant

EU RoHS **China RoHS**
Not Relevant
REACH SVHC
Not Relevant
Halogen-Free Status
Not Relevant

Need more information on product environmental compliance?

Email productcompliance@molex.com
Please visit the Contact Us section for any non-product compliance questions.

China ROHS	Not Relevant
ELV	Not Relevant

Search Parts in this Series
105308 Series

Mates With
Nano-Fit™ Headers 105310 , 105312 , 105314

Use With
Nano-Fit™ Crimp Terminal 105300

Nano-Fit™ TPA Retainer 105325

This document was generated on 08/03/2016

PLEASE CHECK WWW.MOLEX.COM FOR LATEST PART INFORMATION