Product Number: 0382-3-17-15-34-27-02-0

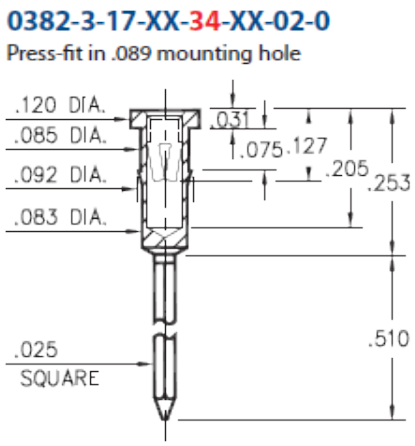

Description:

0382 - Receptacle With A Wire Wrap Tail Accepts .032-.046 diameter leads.

Packaging:

Packaged in Bulk

Mill-Max Part Number	Shell Plating	Contact Plating	RoHS Compliant
0382-3-17-15-34-27-02-0	10 µ" Gold over Nickel	30 µ" Gold over Nickel	RoHS 2002/95/EC

CONTACT:

Contact Used: #34, Standard 4 Finger Contact

Current Rating = 8 Amps

BERYLLIUM COPPER ALLOY 172 (UNS C17200) per ASTM B 194

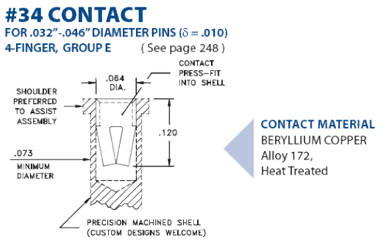

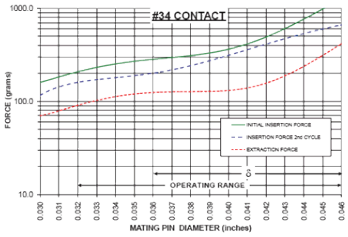

Properties of BERYLLIUM COPPER:

- Chemical composition: Cu 98.1%, Be 1.9%
- Temper as stamped: TD01
- Properties after heat treatment (TH01):
- Hardness: 36-43 Rockwell C
- Mechanical Life: 1000 Cycles Min.
- Density: .298 lbs/in3
- Electrical Conductivity: 22% IACS*
- Resistance: 10 miliohms Max
- Operating Temperature: -55°C/+125°C
- Melting point: 980°C/865°C (liquidus/solidus)
- Stress Relaxation†: 96% of stress remains after 1,000 hours @ 100 °C; 70% of stress remains after 1,000 hours @ 200 °C

*International Annealed Copper Standard, i.e. as a % of pure copper.

†Since BeCu loses its spring properties over time at high temperatures; it is rated for continuous use up to 150°C. For applications up to 300°C, Mill-Max offers many contacts in Beryllium Nickel. Contact Tech Support for more info.

SHELL MATERIAL:

BRASS ALLOY (UNS C36000) per ASTM B 16

Properties of BRASS ALLOY:

- Chemical composition: Cu 61.5%, Zn 35.4%, Pb 3.1%†
- Hardness as machined: 80-90 Rockwell B
- Density: .307 lbs/in3
- Electrical conductivity: 26% IACS*
- Melting point: 900°C/885°C (liquidus/solidus)

†(3 to 4% lead is used to permit "free machining" and is permitted by EC Directive 2002/95Annex 6; so all pin materials are RoHS compliant)

*International Annealed Copper Standard, i.e. as a % of pure copper.

Certificate of Compliance:

This is to Certify that the product described above is manufactured to Mill-Max quality standards in accordance with all applicable specifications and drawing. Mill-Max certifies this product to be free from defects of materials and workmanship.

This Certificate of Compliance covers the following requirements:

- Dimensional (all features verified to be within tolerances described on the applicable drawing).
- Raw Material (materials and properties verified to be as described on the applicable drawing).
- Plating (platings as required, thickness verified, and performance including solderability per mil-standard).
- Performance (insertion extraction or other force requirements as described on the applicable drawing).

RoHS Compliance Statement for the restriction of lead, mercury, cadmium and hexavalent chromium PBB, PBDE, including Octa-BDE, Penta-BDE, Deca -BDE, in electronic equipment and use of PFOA and PFOS in metal plating processes.

Reference:

1. Directive 2002/95/EC of the European Parliament and of the Council of January 27 2003 on the restriction of the use of certain hazardous substances in electrical and electronic equipment.

2. Directive 2003/11/EC which amends Council Directive 76/769/EC to include pentabromodiphenyl ether and octabromodiphenyl ether.

3. Directive 2005/618/EC Commission decision of 18 August 2005 amending Directive 2002/95/EC. Establishes threshold limits for Lead, Mercury, Cadmium, Hexavalent Chromium, PBB, and PBDE.

4. Judgment of the Court (Grand Chamber) 1 April 2008, Directive 2002/95/EC-Electrical and electronic equipment - Decabromodiphenyl ether (Deca-BDE) Actions for annulment of exemption.

5. EU Directive 2006/122/EC of the European Parliament and of the Council of 12 December 2006, amending Council Directive 76/769/EEC on the restriction of Perfluorooctanoic Acid (PFOA) and Perfluorooctane Sulfanates (PFOS) used during metal plating processes.

In reference to the directives described above, MILL-MAX Mfg.Corp. declares that lead, mercury, cadmium, hexavalent chromium, polybrominated biphenyls, polybrominated diphenyl ethers, including pentabromodiphenyl ether, octabromodiphenyl ether, decabromodiphenyl ether, Perfluorooctanoic Acid, and Perfluorooctane Sulfanates are not intentionally added to the raw material or processes used for our certified RoHS compliant products except where described and allowed under item 6 of the annex; Applications where lead mercury, cadmium, and hexavalent chromium, which are exempted from the requirements of Article 4 (1) of reference 1. No warranty, liability of indemnification is expressed or implied with this information.

Compliance Statement for Registration, Evaluation, Authorization and Restriction of Chemicals (REACH)

Reference:

1. Regulation EC No 1907/2006 of the European Parliament and of the Council of 18 December 2006, concerning the Registration, Evaluation, Authorization and Restriction of Chemicals (REACH)

2. ECHA, Candidate list of Substances of Very High Concern (SVHC) http://echa.europa.eu/reach_en.asp

Mill-Max is aware of the regulation and the SVHC list the EU published (referenced above). Mill-Max does not produce or sell any of the listed substances in their homogeneous form. These substances are not intentionally added during the manufacturing of any Mill-Max products. To our knowledge, our products do not contain the substances described on the ECHA SVHC list. Testing is not performed for materials and substances that were not intentionally added. No warranty, liability of indemnification is expressed or implied with this information. Mill-Max maintains surveillance of the ECHA website to obtain the latest information and periodically reviews the SVHC list for changes and additions.

Compliance Statement for DRC Conflict Free products.

Reference:

Dodd-Frank Wall Street Reform and Consumer Protection Act, Section 1502, reporting requirements for users of conflict minerals.

"Conflict minerals," are Columbite-tantalite (coltan), cassiterite, gold, wolframite, or their derivatives; or any other mineral or its derivatives determined by the Secretary of State to be financing conflict in the Democratic Republic of the Congo (DRC) or an adjoining country. Metals derived from these minerals are tin, tantalum, tungsten, and gold. By this definition, the only minerals of concern that may be found in Mill-Max products are tin and gold.

Mill-Max Mfg.Corp. hereby certifies that its products are manufactured with tin and gold that is derived from material that is considered DRC Conflict Free. Mill-Max provides this assurance as a result of a due diligence process that includes traceability to the source and in some cases the identification of recycled and scrap materials included in the subject material.