ZL40207

Precision 1:8 LVPECL Fanout Buffer with On-Chip Input Termination

Data Sheet

April 2014

Features

Inputs/Outputs

- Accepts differential or single-ended input
  - LVPECL, LVDS, CML, HCSL, LVCMOS
- On-chip input termination resistors and biasing for AC coupled inputs
- Eight precision LVPECL outputs
- Operating frequency up to 750 MHz

Power

- Options for 2.5 V or 3.3 V power supply
- Core current consumption of 122 mA
- On-chip Low Drop Out (LDO) Regulator for superior power supply rejection

Performance

- Ultra low additive jitter of 36 fs RMS

Ordering Information

ZL40207LDG1	32 Pin QFN	Trays
ZL40207LDF1	32 Pin QFN	Tape and Reel

Matte Tin

Package size: 5 x 5 mm

-40°C to +85°C

Applications

- General purpose clock distribution
- Low jitter clock trees
- Logic translation
- Clock and data signal restoration
- Wired communications: OTN, SONET/SDH, GE, 10 GE, FC and 10G FC
- PCI Express generation 1/2/3 clock distribution
- Wireless communications
- High performance microprocessor clock distribution

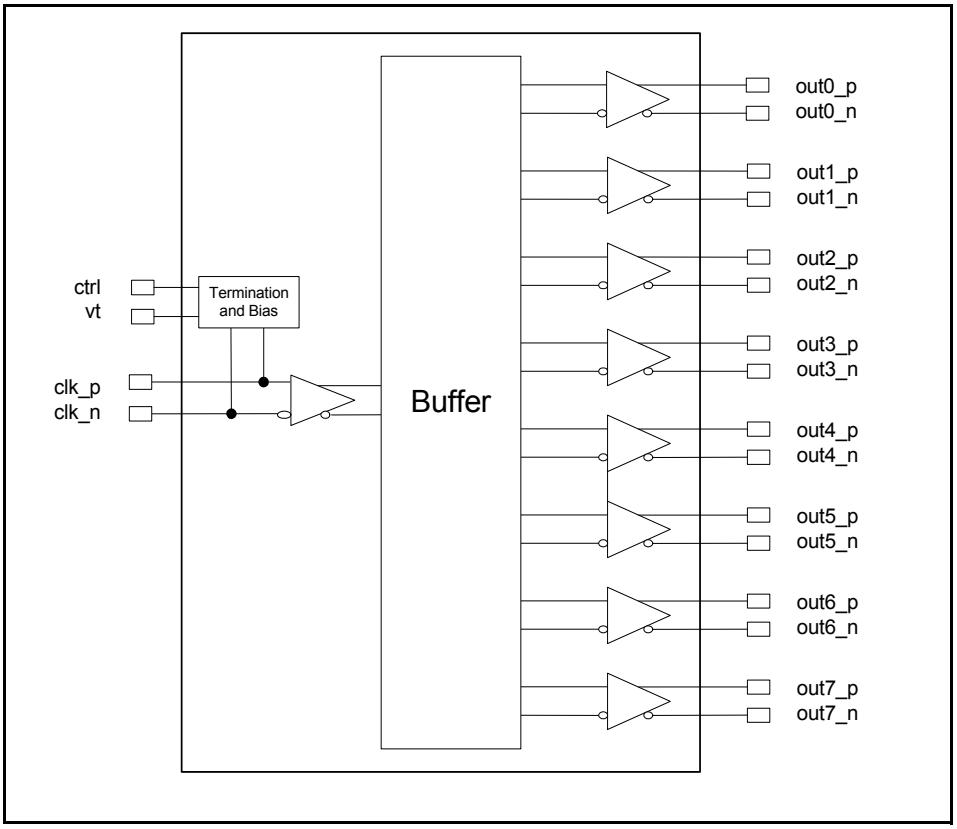

Figure 1 - Functional Block Diagram

Microsemi Corporation
Copyright 2014, Microsemi Corporation. All Rights Reserved.

Table of Contents

Features **1**
Inputs/Outputs 1
Power 1
Performance 1
Applications **1**
Change Summary **4**
1.0 Package Description **5**
2.0 Pin Description **6**
3.0 Functional Description **7**
3.1 Clock Inputs 7
3.2 Clock Outputs 12
3.3 Device Additive Jitter 15
3.4 Power Supply 16
3.4.1 Sensitivity to power supply noise 16
3.4.2 Power supply filtering 16
3.4.3 PCB layout considerations 16
4.0 AC and DC Electrical Characteristics **17**
5.0 Performance Characterization **20**
6.0 Typical Behavior **21**
7.0 Package Characteristics **23**
8.0 Mechanical Drawing **24**

List of Figures

Figure 1 - Functional Block Diagram . . . 1
Figure 2 - Pin Connections . . . 5
Figure 3 - Simplified Diagram of Input Stage . . . 7
Figure 4 - Clock Input - LVPECL - DC Coupled . . . 8
Figure 5 - Clock Input - LVPECL - AC Coupled . . . 8
Figure 6 - Clock Input - LVDS - DC Coupled . . . 9
Figure 7 - Clock Input - LVDS - AC Coupled . . . 9
Figure 8 - Clock Input - CML- AC Coupled . . . 10
Figure 9 - Clock Input - HCSL- AC Coupled . . . 10
Figure 10 - Clock Input - AC-coupled Single-Ended . . . 11
Figure 11 - Clock Input - DC-coupled 3.3V CMOS . . . 11
Figure 12 - Simplified Output Driver . . . 12
Figure 13 - LVPECL Basic Output Termination . . . 12
Figure 14 - LVPECL Parallel Output Termination . . . 13
Figure 15 - LVPECL Parallel Thevenin-Equivalent Output Termination . . . 13
Figure 16 - LVPECL AC Output Termination . . . 14
Figure 17 - LVPECL AC Output Termination for CML Inputs . . . 14
Figure 18 - Additive Jitter . . . 15
Figure 19 - Decoupling Connections for Power Pins . . . 16
Figure 20 - Differential and Single-Ended Output Voltages Parameter Definitions . . . 18
Figure 21 - Input To Output Timing . . . 19

Change Summary

Below are the changes from the February 2013 issue to the April 2014 issue:

Page	Item	Change
1	Applications	Added PCI Express clock distribution.
6	Pin Description	Added exposed pad to Pin Description.
8	Figure 4 and Figure 5	Removed 22 Ohm series resistors from Figure 4 and 5. These resistors are not required; however, there is no impact to performance if the resistors are included.
16	Power supply filtering	Corrected typo of 0.3 ohm to 0.15 ohm.
18	Figure 20	Clarification of V_{ID} and V_{OD}.

Below are the changes from the November 2012 issue to the February 2013 issue:

Page	Item	Change
8	Figure 4	Changed text to indicate the circuit is not recommended for VDD_driver=2.5V.

1.0 Package Description

The device is packaged in a 32 pin QFN

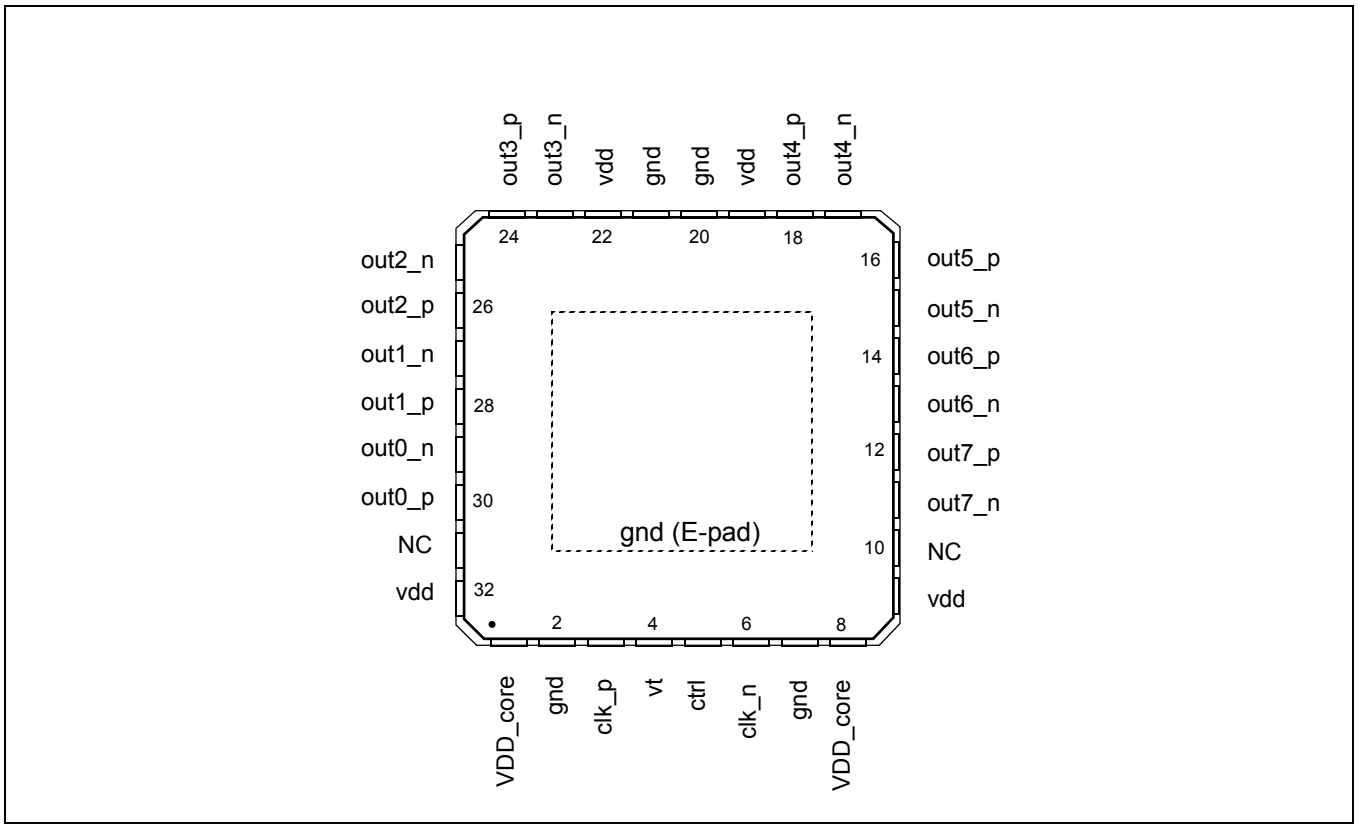

Figure 2 - Pin Connections

2.0 Pin Description

Pin #	Name	Description
3, 6	clk_p, clk_n,	**Differential Input (Analog Input).** Differential (or single ended) input signals. For all input configurations see “Clock Inputs” on page 7
30, 29, 28, 27, 26, 25, 24, 23, 18, 17, 16, 15, 14, 13, 12, 11	out0_p, out0_n out1_p, out1_n out2_p, out2_n out3_p, out3_n out4_p, out4_n out5_p, out5_n out6_p, out6_n out7_p, out7_n	**Differential Output (Analog Output).** Differential outputs.
9, 19, 22, 32	vdd	**Positive Supply Voltage.** 2.5 V_{DC} or 3.3 V_{DC} nominal.
1, 8	vdd_core	**Positive Supply Voltage.** 2.5 V_{DC} or 3.3 V_{DC} nominal.
2, 7, 20, 21	gnd	**Ground.** 0 V.
4	vt	**On-Chip Input Termination Node (Analog).** Center tap between internal 50 Ohm termination resistors. The use of this pin is detailed in section 3.1, “Clock Inputs“, for various input signal types.
5	ctrl	**Digital Control for On-Chip Input Termination (Input).** Selects differential input mode; 0: DC coupled LVPECL or LVDS modes 1: AC coupled differential modes This pin are internally pulled down to GND. The use of this pin is detailed in section 3.1, “Clock Inputs“, for various input signal types.
10, 31	NC	**No Connection.** Leave unconnected.
Exposed Pad		**Device GND**.

3.0 Functional Description

The ZL40207 is an LVPECL clock fan out buffer with eight output clock drivers capable of operating at frequencies up to 750MHz.

The ZL40207 provides an internal input termination network for DC and AC coupled inputs; optional input biasing for AC coupled inputs is also provided. The ZL40207 can accept DC or AC coupled LVPECL and LVDS input signals, AC coupled CML or HCSL input signals, and single ended signals. A pin compatible device with external termination is also available.

The ZL40207 is designed to fan out low-jitter reference clocks for wired or optical communications applications while adding minimal jitter to the clock signal. An internal linear power supply regulator and bulk capacitors minimize additive jitter due to power supply noise. The device operates from 2.5V+/-5% or 3.3V+/-5% supply. Its operation is guaranteed over the industrial temperature range -40°C to +85°C.

The device block diagram is shown in Figure 1; its operation is described in the following sections.

3.1 Clock Inputs

The device has a differential input equipped with two on-chip 50 Ohm termination resistors arranged in series with a center tap. The input can accept many differential and single-ended signals with AC or DC coupling as appropriate. A control pin is available to enable internal biasing for AC coupled inputs. A block diagram of the input stage is in Figure 3.

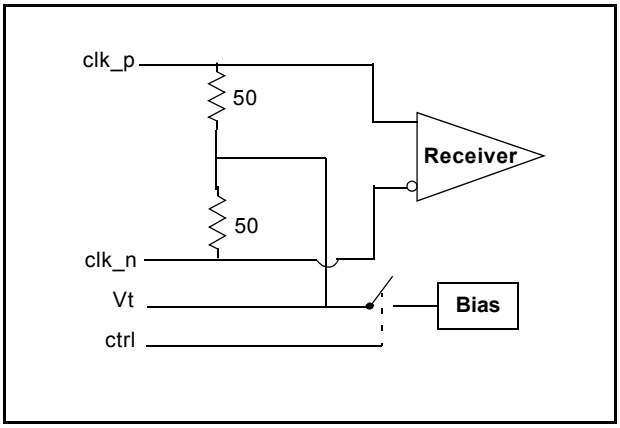

Figure 3 - Simplified Diagram of Input Stage

This following figures give the components values and configuration for the various circuits compatible with the input stage and the use of the *Vt* and *ctrl* pins in each case.

In the following diagrams where the *ctrl* pin is logically one and the *Vt* pin is not connected, the *Vt* pin can be instead connected to VDD with a capacitor. A capacitor can also help in Figure 4 between *Vt* and VDD. This capacitor will minimize the noise at the point between the two internal termination resistors and improve the overall performance of the device.

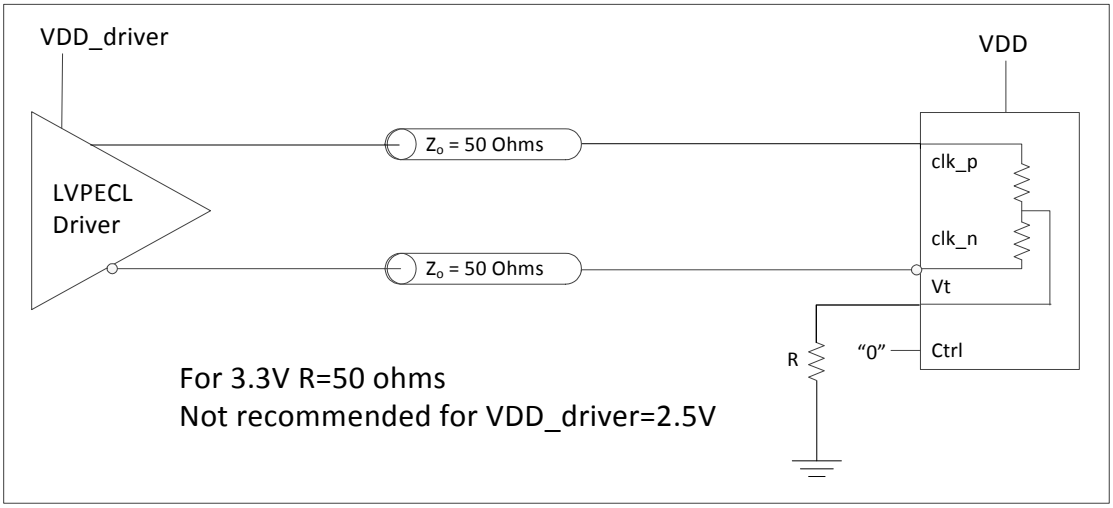

Figure 4 - Clock Input - LVPECL - DC Coupled

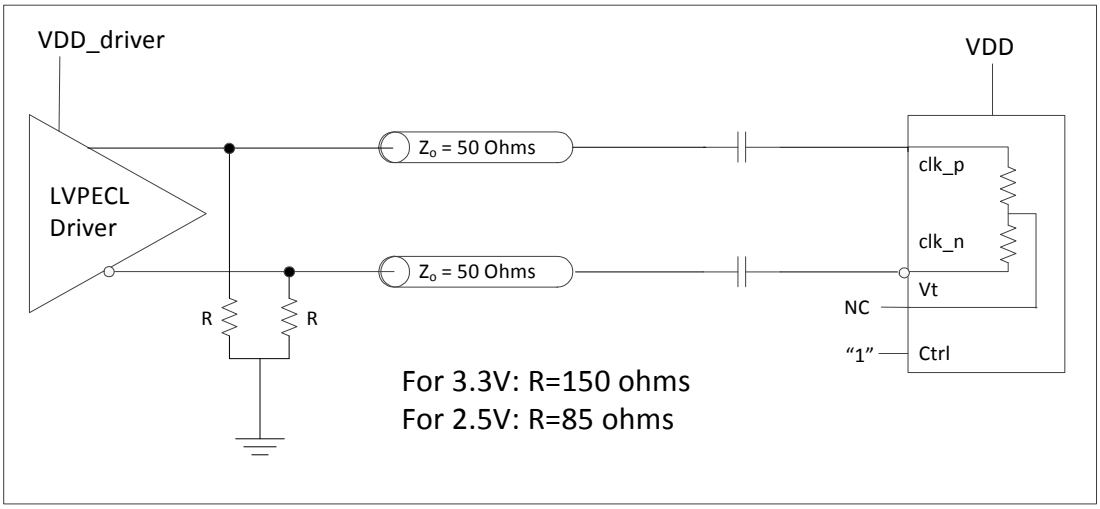

Figure 5 - Clock Input - LVPECL - AC Coupled

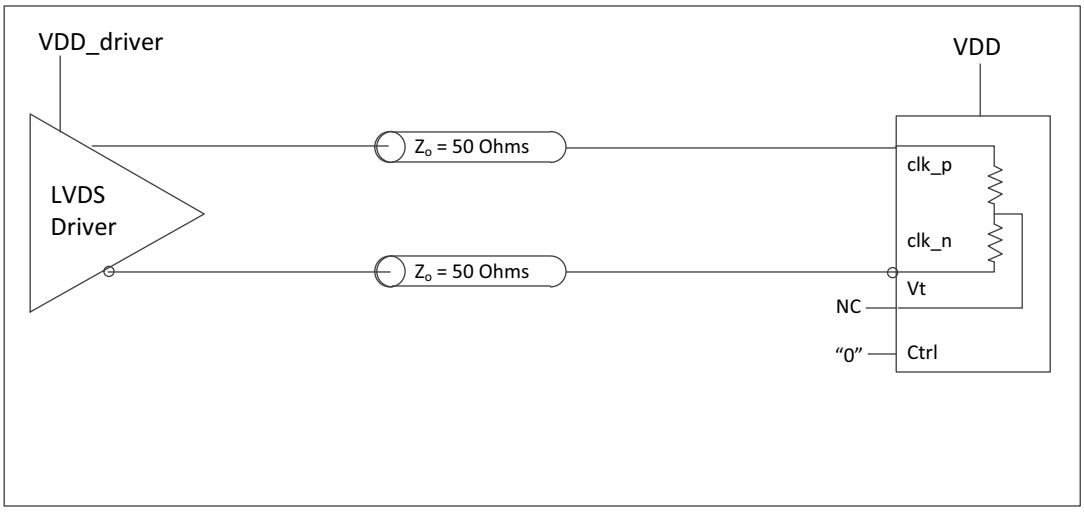

Figure 6 - Clock Input - LVDS - DC Coupled

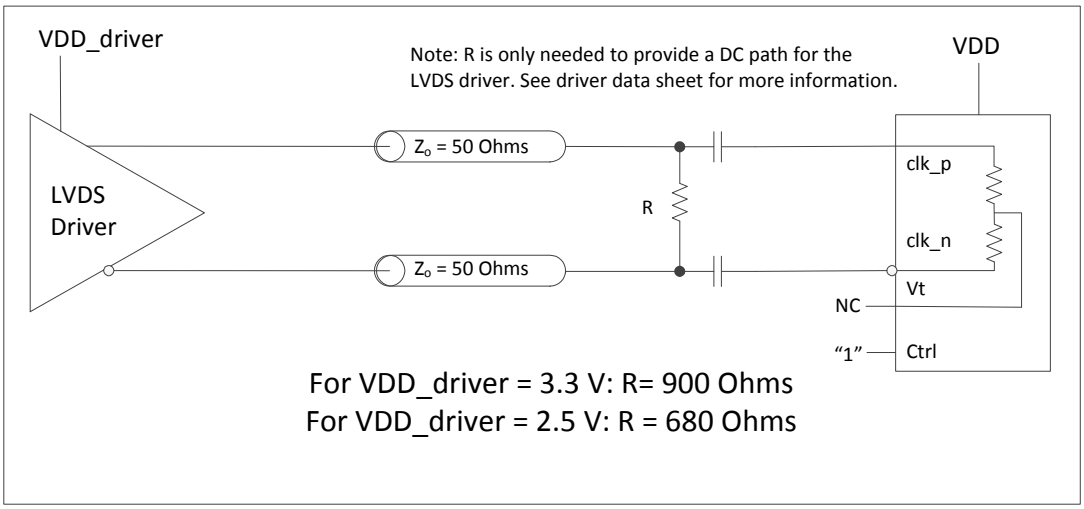

Figure 7 - Clock Input - LVDS - AC Coupled

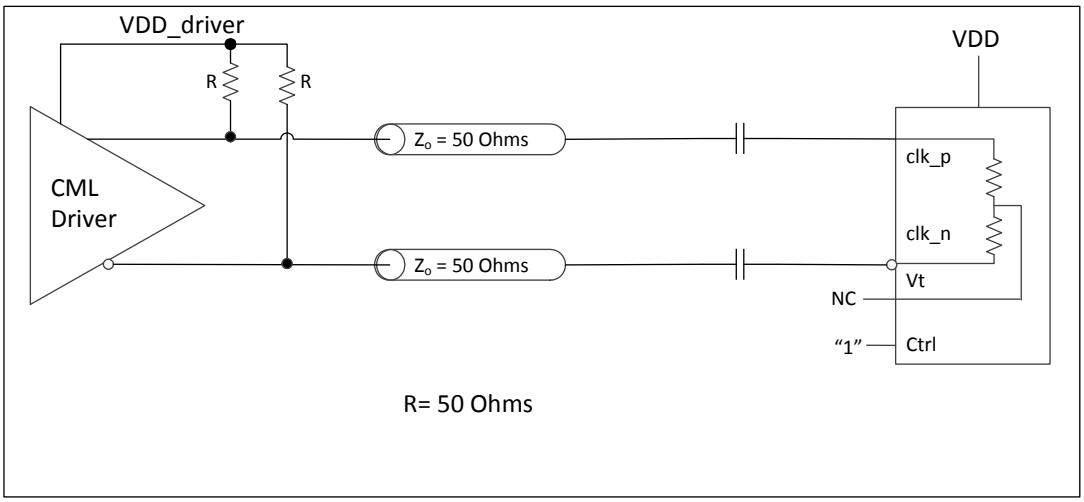

Figure 8 - Clock Input - CML- AC Coupled

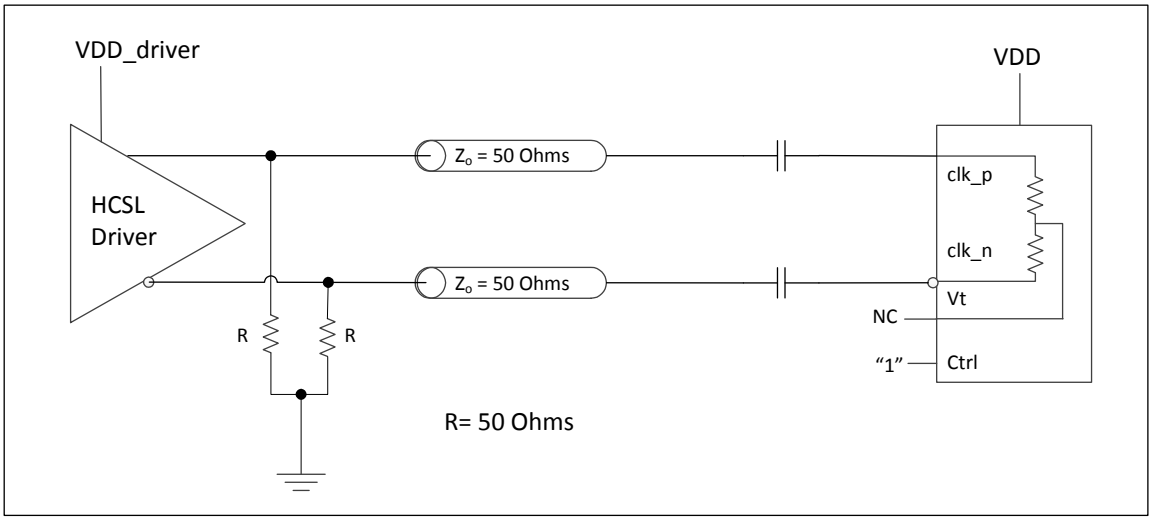

Figure 9 - Clock Input - HCSL- AC Coupled

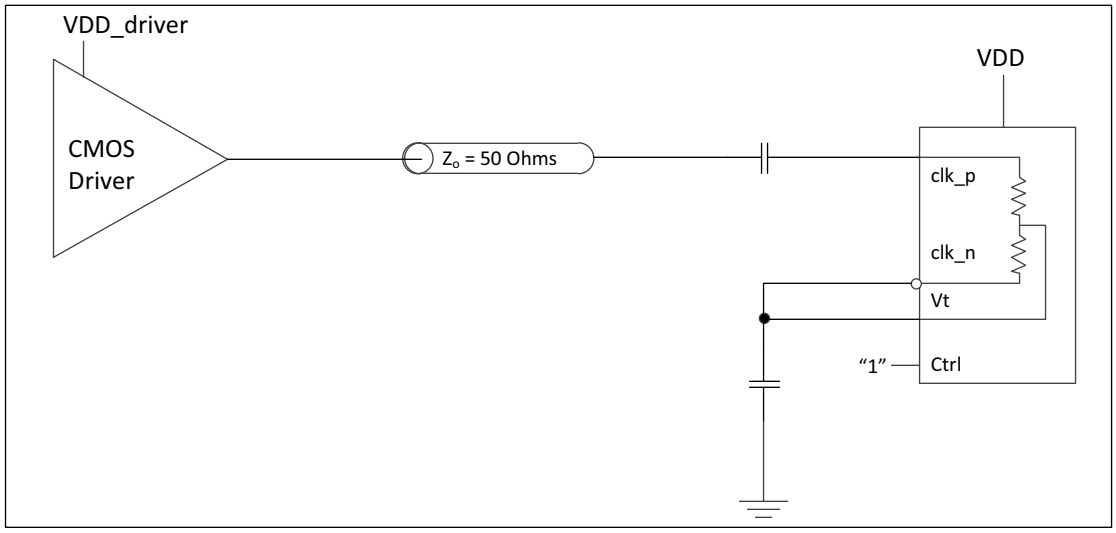

Figure 10 - Clock Input - AC-coupled Single-Ended

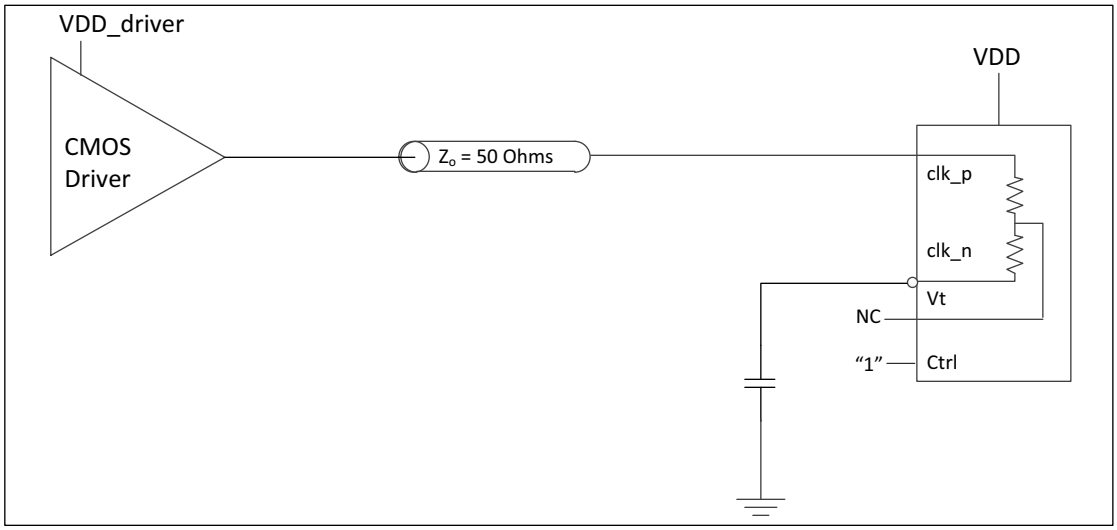

Figure 11 - Clock Input - DC-coupled 3.3V CMOS

3.2 Clock Outputs

LVPECL has a very low output impedance and a differential signal swing between 1V and 1.6 V. A simplified diagram for the output stage is shown in Figure 12.The LVPECL to LVDS output termination is not shown since there is a different device with the same inputs and LVDS outputs.

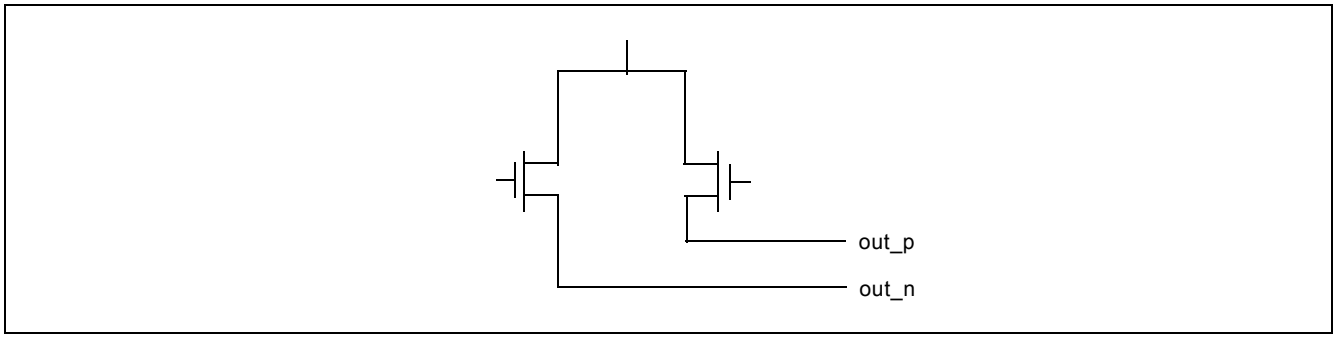

Figure 12 - Simplified Output Driver

The methods to terminate the ZL40207 LVPECL drivers are shown in the following figures.

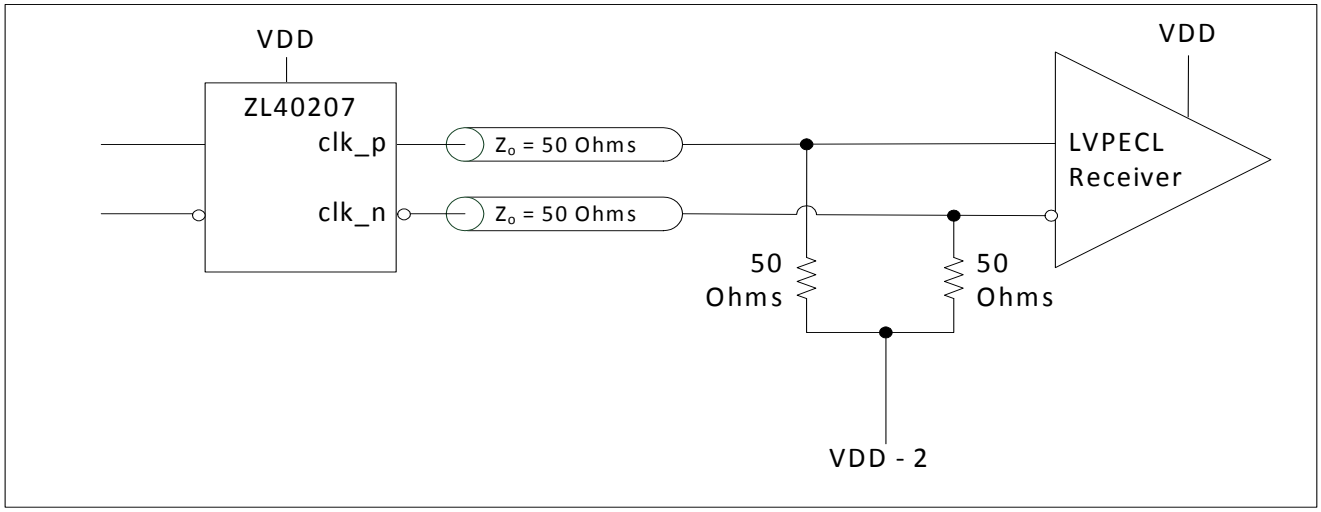

Figure 13 - LVPECL Basic Output Termination

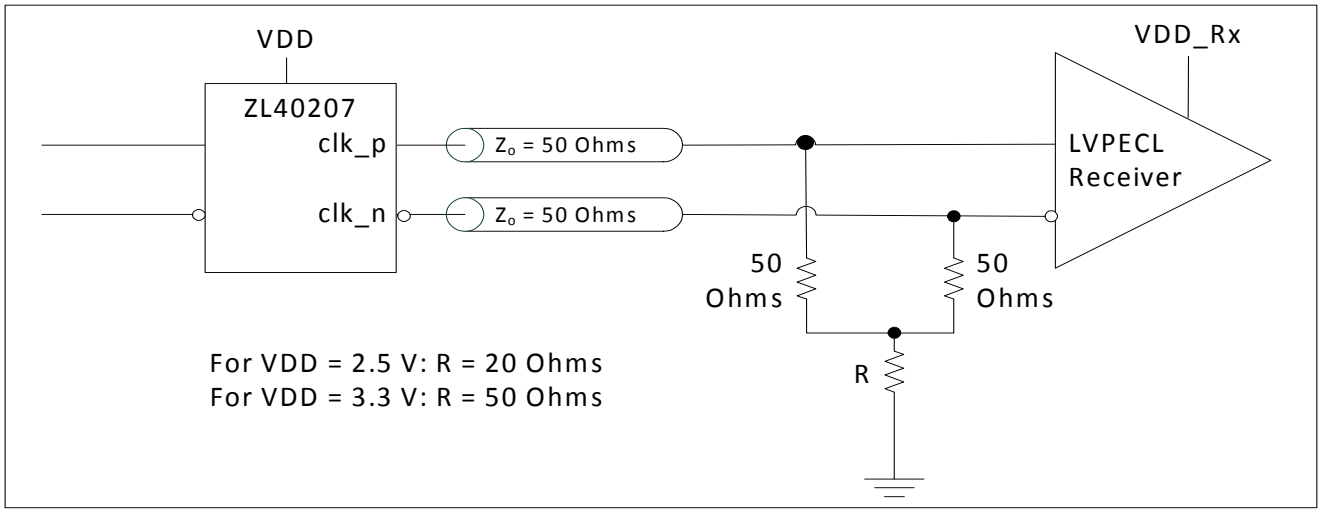

Figure 14 - LVPECL Parallel Output Termination

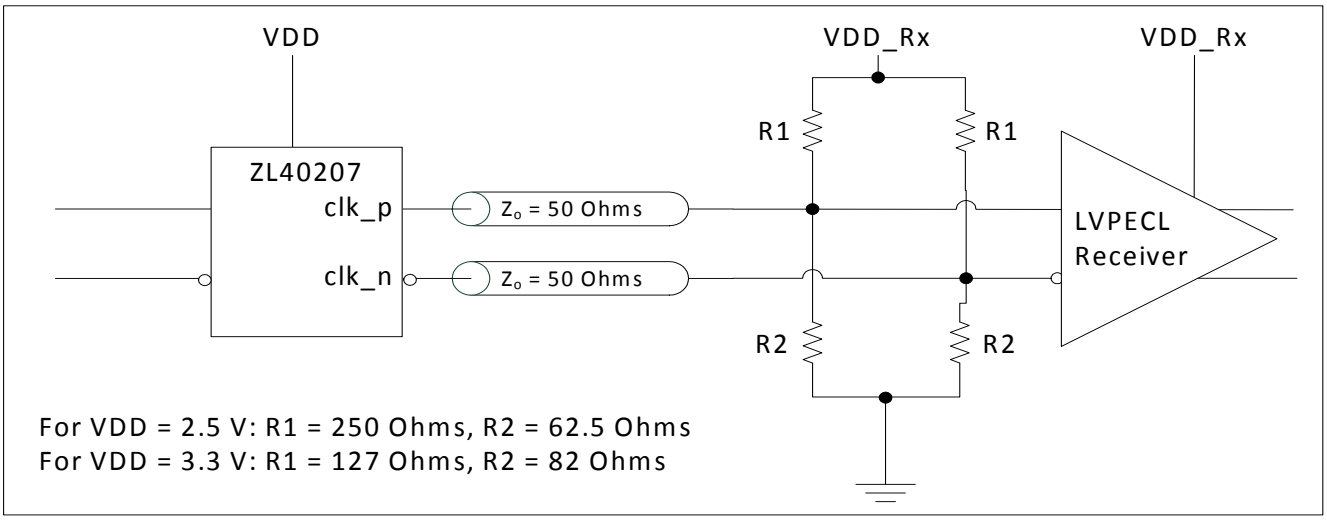

Figure 15 - LVPECL Parallel Thevenin-Equivalent Output Termination

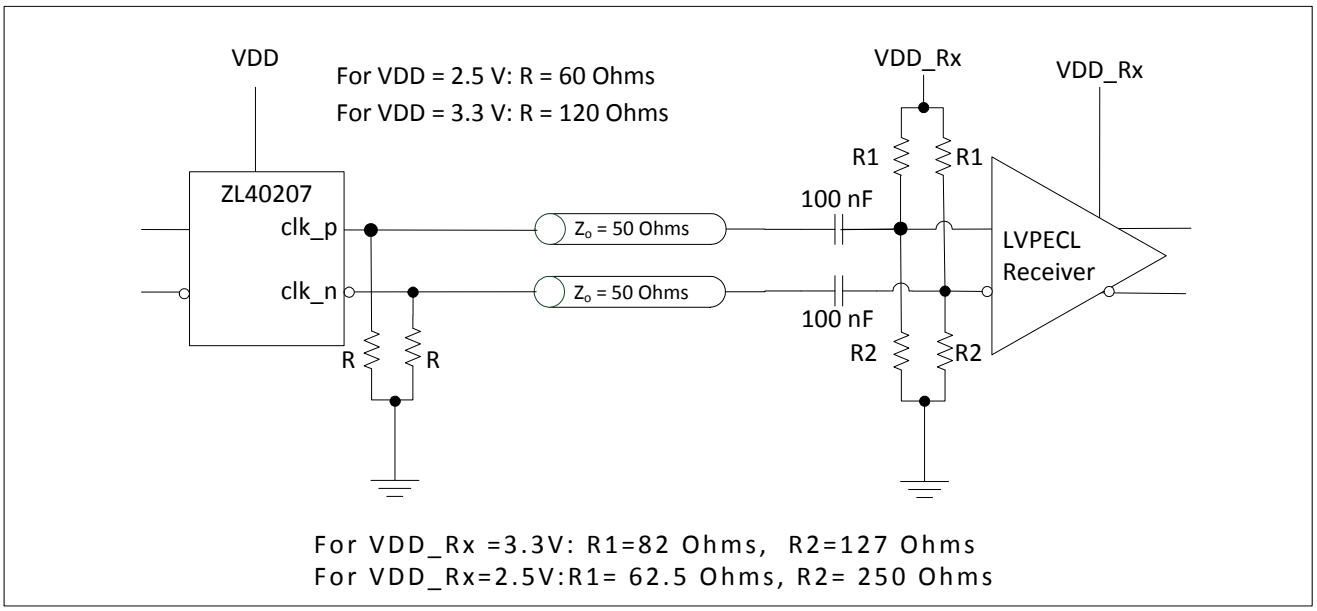

Figure 16 - LVPECL AC Output Termination

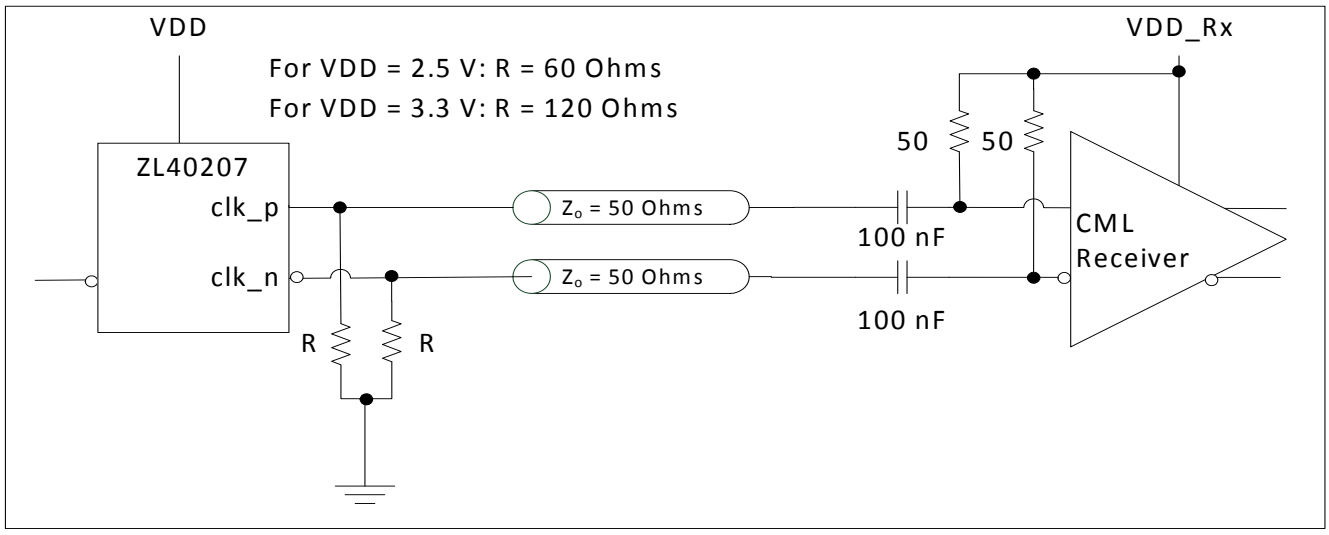

Figure 17 - LVPECL AC Output Termination for CML Inputs

3.3 Device Additive Jitter

The ZL40207 clock fanout buffer is not intended to filter clock jitter. The jitter performance of this type of device is characterized by its additive jitter. Additive jitter is the jitter the device would add to a hypothetical jitter-free clock as it passes through the device. The additive jitter of the ZL40207 is random and as such it is not correlated to the jitter of the input clock signal.

The square of the resultant random RMS jitter at the output of the ZL40207 is equal to the sum of the squares of the various random RMS jitter sources including: input clock jitter; additive jitter of the buffer; and additive random jitter due to power supply noise. There may be additional deterministic jitter sources, but they are not shown in Figure 18.

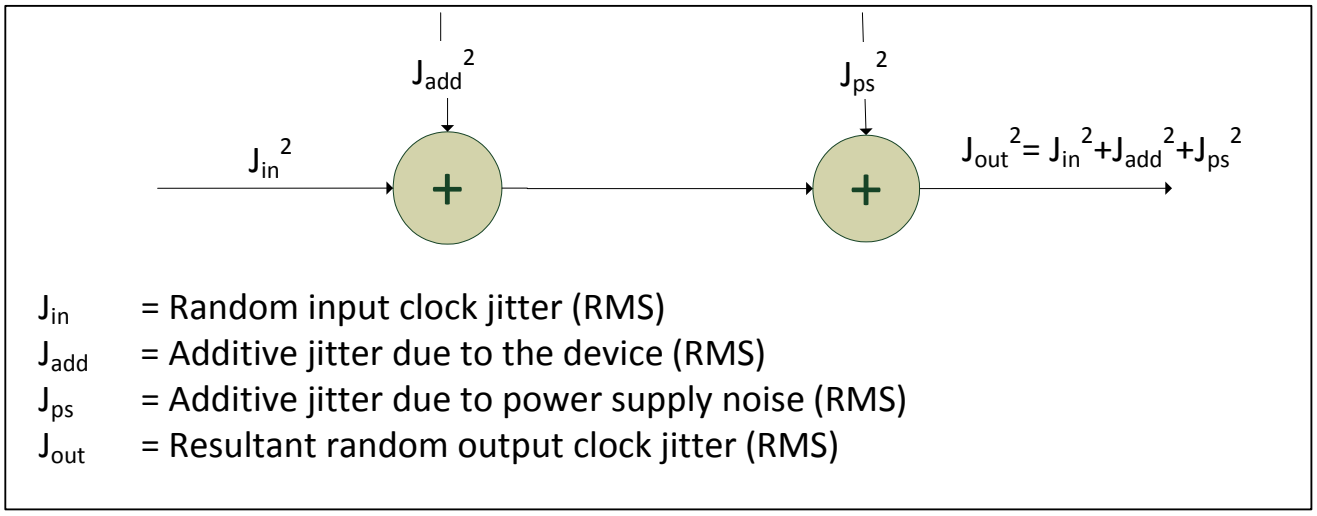

Figure 18 - Additive Jitter

3.4 Power Supply

This device operates employing either a 2.5V supply or 3.3V supply.

3.4.1 Sensitivity to power supply noise

Power supply noise from sources such as switching power supplies and high-power digital components such as FPGAs can induce additive jitter on clock buffer outputs. The ZL40207 is equipped with a low drop out (LDO) regulator and on-chip bulk capacitors to minimize additive jitter due to power supply noise. The on-chip regulation, recommended power supply filtering, and good PCB layout all work together to minimize the additive jitter from power supply noise.

3.4.2 Power supply filtering

Jitter levels may increase when noise is present on the power pins. For optimal jitter performance, the device should be isolated from the power planes connected to its power supply pins as shown in Figure 19.

- 10 µF capacitors should be size 0603 or size 0805 X5R or X7R ceramic, 6.3 V minimum rating
- 0.1 µF capacitors should be size 0402 X5R ceramic, 6.3 V minimum rating
- Capacitors should be placed next to the connected device power pins
- a 0.15 Ohm resistor is recommended

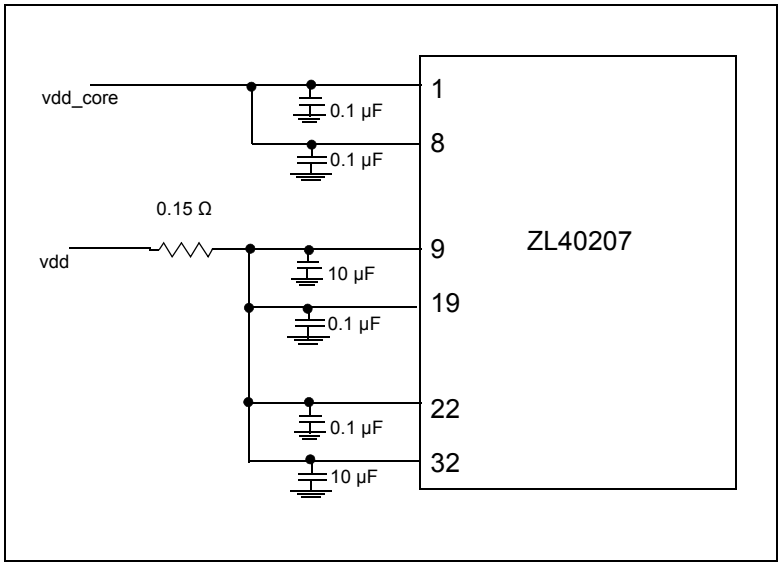

Figure 19 - Decoupling Connections for Power Pins

3.4.3 PCB layout considerations

The power nets in Figure 19 can be implemented either as a plane island or routed power topology without changing the overall jitter performance of the device.

4.0 AC and DC Electrical Characteristics

Absolute Maximum Ratings*

	Parameter	Sym.	Min.	Max.	Units
1	Supply voltage	V_{DD_R}	-0.5	4.6	V
2	Voltage on any digital pin	V_{PIN}	-0.5	V_{DD}	V
4	LVPECL output current	I_{out}		30	mA
5	Soldering temperature	T		260	°C
6	Storage temperature	T_{ST}	-55	125	°C
7	Junction temperature	T_j		125	°C
8	Voltage on input pin	V_{input}		V_{DD}	V
9	Input capacitance each pin	C_p		500	fF

* Exceeding these values may cause permanent damage. Functional operation under these conditions is not implied.
* Voltages are with respect to ground (GND) unless otherwise stated

Recommended Operating Conditions*

	Characteristics	Sym.	Min.	Typ.	Max.	Units
1	Supply voltage 2.5 V mode	V_{DD25}	2.375	2.5	2.625	V
2	Supply voltage 3.3 V mode	V_{DD33}	3.135	3.3	3.465	V
3	Operating temperature	T_A	-40	25	85	°C

* Voltages are with respect to ground (GND) unless otherwise stated

DC Electrical Characteristics - Current Consumption

	Characteristics	Sym.	Min.	Typ.	Max.	Units	Notes
1	Supply current LVPECL drivers - unloaded	I_{dd_unload}		122		mA	
2	Supply current LVPECL drivers - loaded (all outputs are active)	I_{dd_load}		253		mA	Including power to R_L = 50Ω

DC Electrical Characteristics - Inputs and Outputs - for 3.3 V Supply

	Characteristics	Sym.	Min.	Typ.	Max.	Units	Notes
1	CMOS control logic high-level input voltage	V_{CIH}	0.7*V_{DD}			V	
2	CMOS control logic low-level input voltage	V_{CIL}			0.3*V_{DD}	V	
3	CMOS control logic Input leakage current	I_{IL}		1		µA	V_I = V_{DD} or 0 V
4	Differential input common mode voltage	V_{CM}	1.1		2.0	V	
5	Differential input voltage difference	V_{ID}	0.25		1	V	
6	Differential input resistance	V_{IR}	80	100	120	ohm	

DC Electrical Characteristics - Inputs and Outputs - for 3.3 V Supply

	Characteristics	Sym.	Min.	Typ.	Max.	Units	Notes
7	LVPECL output high voltage	V_{OH}	V_{DD} - 1.40			V	
8	LVPECL output low voltage	V_{OL}			V_{DD} - 1.62	V	
9	LVPECL output differential voltage*	V_{OD}	0.5		0.9	V	

* This parameter was measured from 125 MHz to 750 MHz.

DC Electrical Characteristics - Inputs and Outputs - for 2.5 V Supply

	Characteristics	Sym.	Min.	Typ.	Max.	Units	Notes
1	Differential input common mode voltage	V_{CM}	1.1		1.6	V	
2	Differential input voltage difference	V_{ID}	0.25		1	V	
3	Differential input resistance	V_{IR}	80	100	120	ohm	
4	LVPECL output high voltage	V_{OH}	V_{DD} - 1.40			V	
5	LVPECL output low voltage	V_{OL}			V_{DD} - 1.62	V	
6	LVPECL output differential voltage*	V_{OD}	0.4		0.9	V	

* This parameter was measured from 125 MHz to 750 MHz.

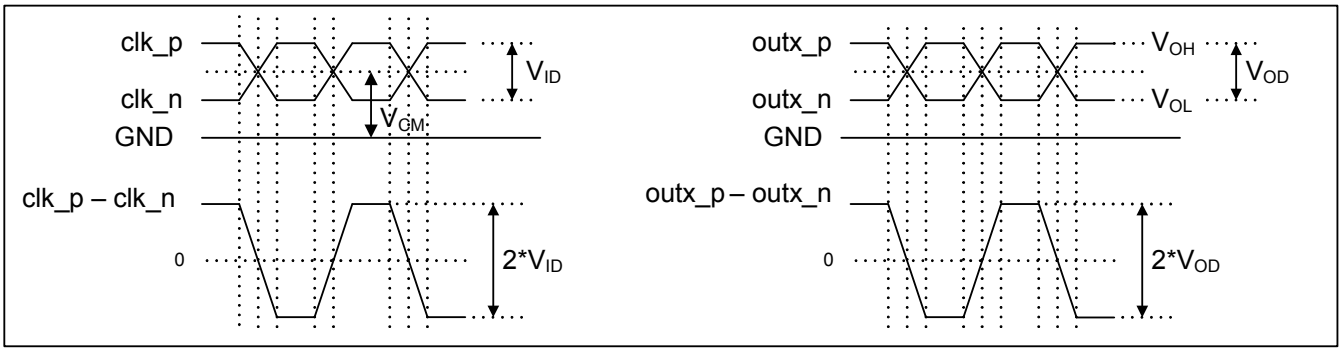

Figure 20 - Differential and Single-Ended Output Voltages Parameter Definitions

AC Electrical Characteristics* - Inputs and Outputs (see Figure 21) - for 2.5/3.3 V supply.

	Characteristics	Sym.	Min.	Typ.	Max.	Units	Notes
1	Maximum Operating Frequency	$1/t_p$			750	MHz	
2	Input to output clock propagation delay	t_{pd}	0	1	2	ns	
3	Output to output skew	$t_{out2out}$		50	100	ps	
4	Part to part output skew	$t_{part2part}$		80	300	ps	
5	Output clock Duty Cycle degradation	t_{PWH}/ t_{PWL}	-2	0	2	Percent	
6	LVPECL Output clock slew rate	r_{SL}	0.75	1.2		V/ns	

* Supply voltage and operating temperature are as per Recommended Operating Conditions

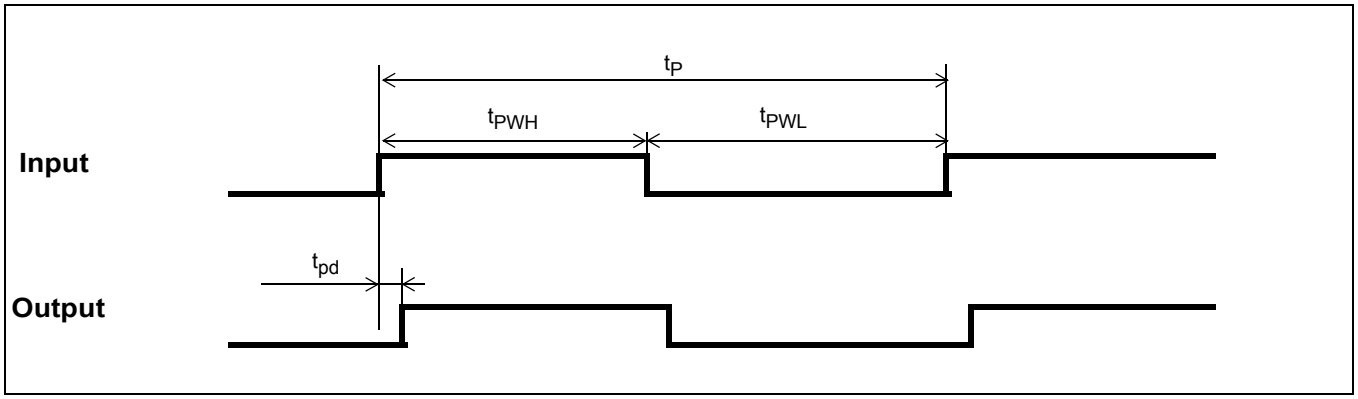

Figure 21 - Input To Output Timing

5.0 Performance Characterization

Additive Jitter at 2.5 V*

	Output Frequency (MHz)	Jitter Measurement Filter	Typical RMS (fs)	Notes
1	125	12 kHz - 20 MHz	139	
2	212.5	12 kHz - 20 MHz	109	
3	311.04	12 kHz - 20 MHz	85	
4	425	12 kHz - 20 MHz	57	
5	500	12 kHz - 20 MHz	50	
6	622.08	12 kHz - 20 MHz	40	
7	750	12 kHz - 20 MHz	36	

*The values in this table were taken with an approximate slew rate of 0.8 V/ns.

Additive Jitter at 3.3 V*

	Output Frequency (MHz)	Jitter Measurement Filter	Typical RMS (fs)	Notes
1	125	12 kHz - 20 MHz	115	
2	212.5	12 kHz - 20 MHz	85	
3	311.04	12 kHz - 20 MHz	72	
4	425	12 kHz - 20 MHz	55	
5	500	12 kHz - 20 MHz	48	
6	622.08	12 kHz - 20 MHz	41	
7	750	12 kHz - 20 MHz	39	

*The values in this table were taken with an approximate slew rate of 0.8 V/ns.

Additive Jitter from a Power Supply Tone*

Carrier frequency	Parameter	Typical	Units	Notes
125MHz	25 mV at 100 kHz	115	fs RMS	
750MHz	25 mV at 100 kHz	59	fs RMS	

* The values in this table are the additive periodic jitter caused by an interfering tone typically caused by a switching power supply. For this test, measurements were taken over the full temperature and voltage range for V_{DD} = 2.5 V. The magnitude of the interfering tone is measured at the DUT.

6.0 Typical Behavior

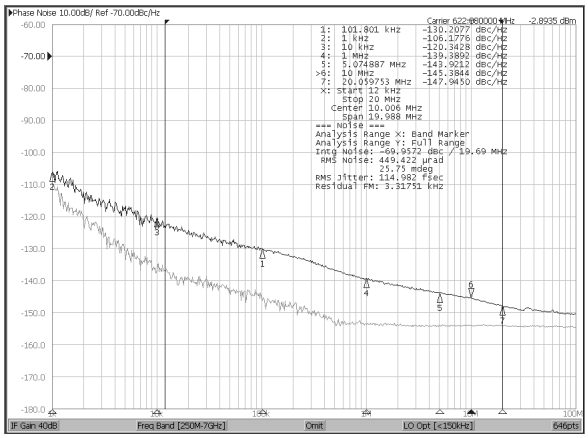

Typical Phase Noise at 622.08 MHz

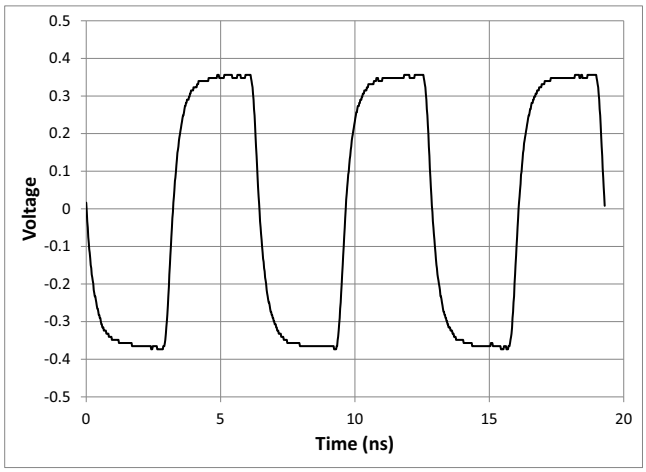

Typical Waveformat 155.52 MHz

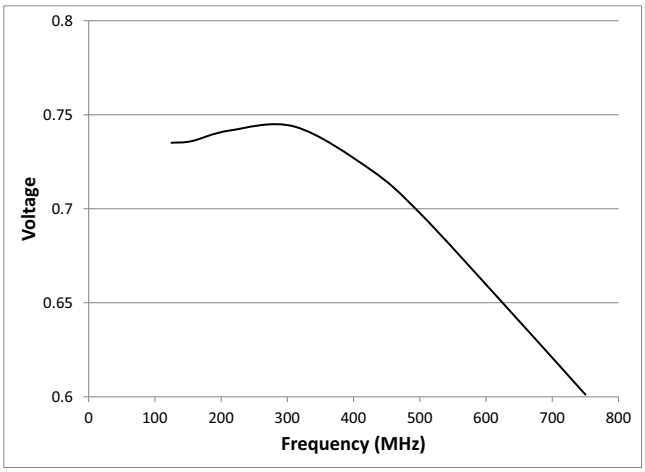

V_{OD} versus Frequency

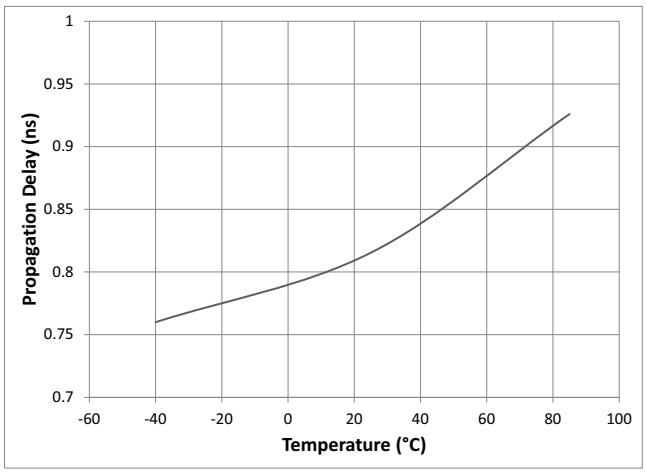

Propagation Delay versus Temperature

Note: This is for a single device. For more details see the

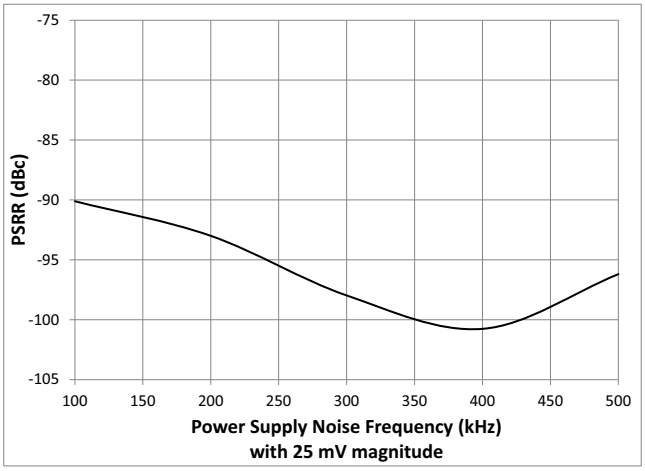

Power Supply Tone Frequency (at 25 mV) versus PSRR at 125 MHz

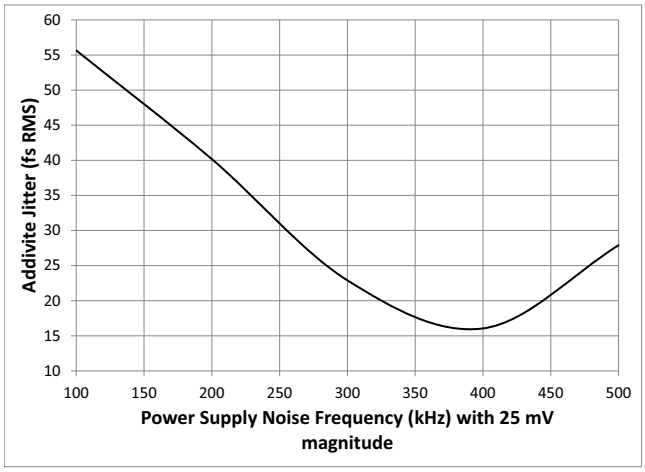

Power Supply Tone Frequency (at 25 mV) versus Additive Jitter at 125 MHz

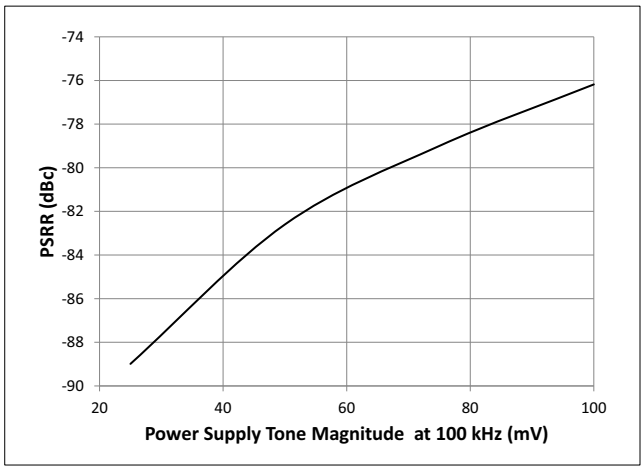

Power Supply Tone Magnitude (at 100 kHz) versus PSRR at 125 MHz

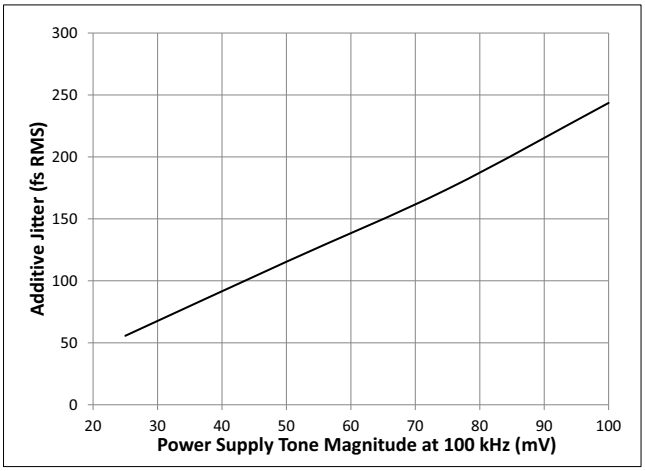

Power Supply Tone Magnitude (at 100 kHz) versus Additive Jitter at 125 MHz

7.0 Package Characteristics

Thermal Data

Parameter	Symbol	Test Condition	Value	Unit
Junction to Ambient Thermal Resistance	Θ_{JA}	Still Air 1 m/s 2 m/s	37.4 33.1 31.5	^{o}C/W
Junction to Case Thermal Resistance	Θ_{JC}		24.4	^{o}C/W
Junction to Board Thermal Resistance	Θ_{JB}		19.5	^{o}C/W
Maximum Junction Temperature*	T_{jmax}		125	^{o}C
Maximum Ambient Temperature	T_{A}		85	^{o}C

8.0 Mechanical Drawing

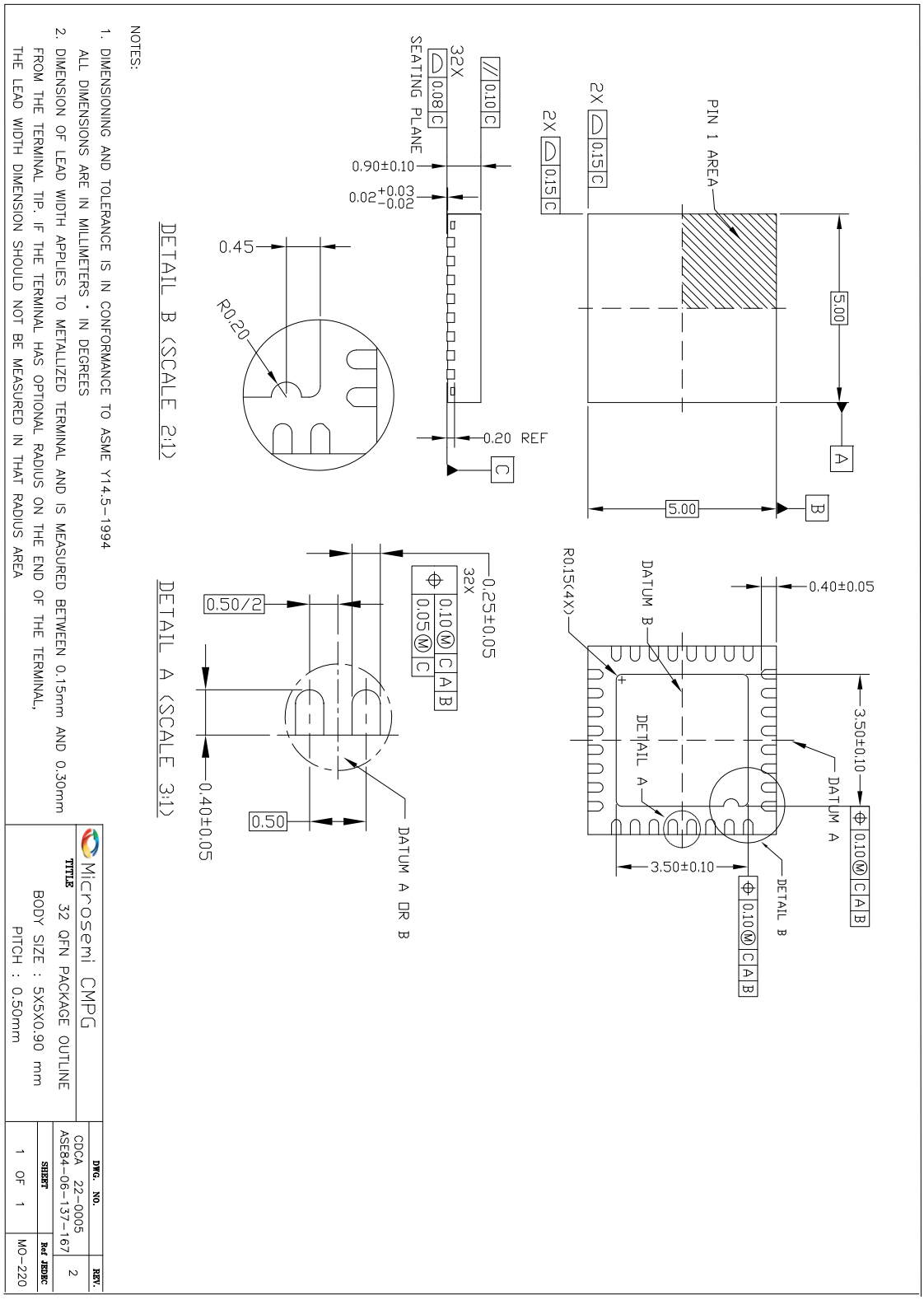

Information relating to products and services furnished herein by Microsemi Corporation or its subsidiaries (collectively “Microsemi”) is believed to be reliable. However, Microsemi assumes no liability for errors that may appear in this publication, or for liability otherwise arising from the application or use of any such information, product or service or for any infringement of patents or other intellectual property rights owned by third parties which may result from such application or use. Neither the supply of such information or purchase of product or service conveys any license, either express or implied, under patents or other intellectual property rights owned by Microsemi or licensed from third parties by Microsemi, whatsoever. Purchasers of products are also hereby notified that the use of product in certain ways or in combination with Microsemi, or non-Microsemi furnished goods or services may infringe patents or other intellectual property rights owned by Microsemi.

This publication is issued to provide information only and (unless agreed by Microsemi in writing) may not be used, applied or reproduced for any purpose nor form part of any order or contract nor to be regarded as a representation relating to the products or services concerned. The products, their specifications, services and other information appearing in this publication are subject to change by Microsemi without notice. No warranty or guarantee express or implied is made regarding the capability, performance or suitability of any product or service. Information concerning possible methods of use is provided as a guide only and does not constitute any guarantee that such methods of use will be satisfactory in a specific piece of equipment. It is the user’s responsibility to fully determine the performance and suitability of any equipment using such information and to ensure that any publication or data used is up to date and has not been superseded. Manufacturing does not necessarily include testing of all functions or parameters. These products are not suitable for use in any medical and other products whose failure to perform may result in significant injury or death to the user. All products and materials are sold and services provided subject to Microsemi’s conditions of sale which are available on request.

For more information about all Microsemi products
visit our website at
www.microsemi.com

TECHNICAL DOCUMENTATION – NOT FOR RESALE



Microsemi Corporate Headquarters One
One Enterprise, Aliso Viejo CA 92656 USA
Within the USA: +1 (800) 713-4113
Outside the USA: +1 (949) 380-6100
Sales: +1 (949) 380-6136
Fax: +1 (949) 215-4996
E-mail: sales.support@microsemi.com

Microsemi Corporation (NASDAQ: MSCC) offers a comprehensive portfolio of semiconductor and system solutions for communications, defense and security, aerospace and industrial markets. Products include high-performance and radiation-hardened analog mixed-signal integrated circuits, FPGAs, SoCs and ASICs; power management products; timing and synchronization devices and precise time solutions, setting the world’s standard for time; voice processing devices; RF solutions; discrete components; security technologies and scalable anti-tamper products; Power-over-Ethernet ICs and midspans; as well as custom design capabilities and services. Microsemi is headquartered in Aliso Viejo, Calif. and has approximately 3,400 employees globally. Learn more at www.microsemi.com.

© 2014 Microsemi Corporation. All rights reserved. Microsemi and the Microsemi logo are trademarks of Microsemi Corporation. All other trademarks and service marks are the property of their respective owners.