General Description

The MIC5156, MIC5157, and MIC5158 Super Low-Dropout (LDO) Regulator Controllers are single IC solutions for high-current low-dropout linear voltage regulation. Super LDO™ Regulators have the advantages of an external N-channel power MOSFET as the linear pass element.

The MIC5156/7/8 family features a dropout voltage as low as the $R_{DS(ON)}$ of the external power MOSFET multiplied by the output current. The output current can be as high as the largest MOSFETs can provide.

The MIC5156/7/8 family operates from 3V to 36V. The MIC5156 requires an external gate drive supply to provide the higher voltage needed to drive the gate of the external MOSFET. The MIC5157 and MIC5158 each have an internal charge pump tripler to produce the gate drive voltage. The tripler is capable of providing enough voltage to drive a logic-level MOSFET to 3.3V output from a 3.5V supply and is clamped to 17.5V above the supply voltage. The tripler requires three external capacitors.

The regulator output is constant-current limited when the controller detects 35mV across an optional external sense resistor. An active-low open-collector flag indicates a low voltage of 8% or more below nominal output. A shutdown (low) signal to the TTL-compatible enable control reduces controller supply current to less than 1µA while forcing the output voltage to ground.

The MIC5156-3.3 and MIC5156-5.0 controllers have internally fixed output voltages. The MIC5156 [adjustable] output is configured using two external resistors. The MIC5157 is a fixed output controller which is externally configured to select either 3.3V, 5.0V, or 12V. The MIC5158 can be configured as a fixed 5V controller or programmed to any voltage from 1.3V to 36V using two external resistors.

The MIC5156 is available in an 8-pin DIP or SOIC. The MIC5157 and MIC5158 are available in a 14-pin DIP or SOIC which operate from –40°C to +85°C.

Features

- 4.5mA typical operating current
- <1µA typical standby current
- Low external parts count
- Optional current limit (35mV typical threshold)
- 1% initial output voltage tolerance in most configurations
- 2% output voltage tolerance over temperature
- Fixed output voltages of 3.3V, 5.0V (MIC5156)
- Fixed output voltages of 3.3V, 5.0V, 12V (MIC5157)
- Programmable (1.3 to 36V) with 2 resistors (MIC5156/8)
- Internal charge pump voltage tripler (MIC5157/8)
- Enable pin to activate or shutdown the regulator
- Internal gate-to-source protective clamp
- All versions available in DIP and SOIC

Applications

- Ultrahigh current ultralow dropout voltage regulator
- Constant high-current source
- Low parts count 5.0V to 3.3V computer supply
- Low noise/low-dropout SMPS post regulator
- High-current, current-limited switch

Typical Applications

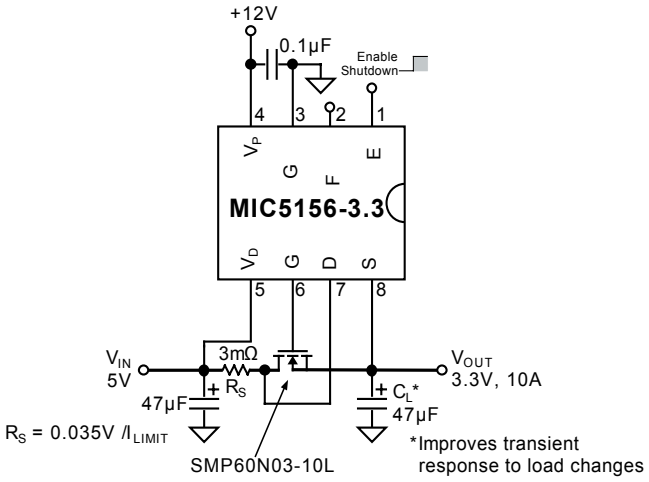

10A 5V to 3.3V Desktop Computer Regulator

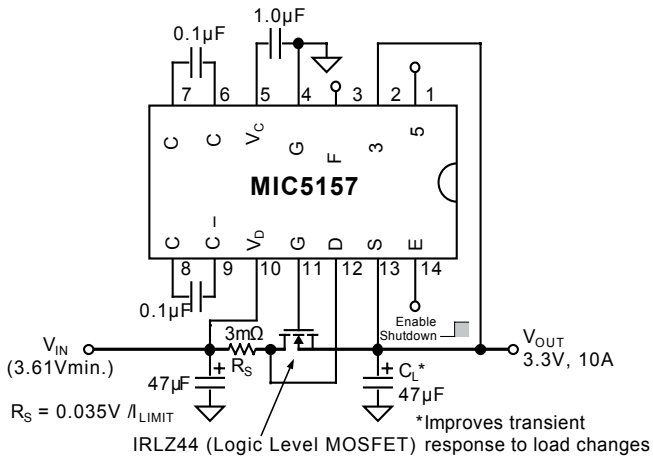

10A Low-Dropout Voltage Regulator

Super LDO is a trademark of Micrel, Inc.

Micrel, Inc. • 2180 Fortune Drive • San Jose, CA 95131 • USA • tel + 1 (408) 944-0800 • fax + 1 (408) 474-1000 • http://www.micrel.com

Ordering Information MIC5156

Part Number			Temperature	
Standard	Pb-Free	Voltage	Range	Package
MIC5156-3.3BN	MIC5156-3.3YN	3.3V	–40°C to +85°C	8-pin DIP
MIC5156-5.0BN	MIC5156-5.0YN	5.0V	–40°C to +85°C	8-pin DIP
MIC5156BN	MIC5156YN	Adj	–40°C to +85°C	8-pin DIP
MIC5156-3.3BM	MIC5156-3.3YM	3.3V	–40°C to +85°C	8-pin SOIC
MIC5156-5.0BM	MIC5156-5.0YM	5.0V	–40°C to +85°C	8-pin SOIC
MIC5156BM	MIC5156YM	Adj	–40°C to +85°C	8-pin SOIC

Ordering Information MIC5157

Part Number			Temperature	
Standard	Pb-Free	Voltage	Range	Package
MIC5157BN	MIC5157YN	Selectable	–40°C to +85°C	14-pin DIP
MIC5157BM	MIC5157YM	Selectable	–40°C to +85°C	14-pin SOIC

Ordering Information MIC5158

Part Number			Temperature	
Standard	Pb-Free	Voltage	Range	Package
MIC5158BN	MIC5158YN	5.0V/Adj	–40°C to +85°C	14-pin DIP
MIC5158BM	MIC5158YM	5.0V/Adj	–40°C to +85°C	14-pin SOIC

Pin Configuration

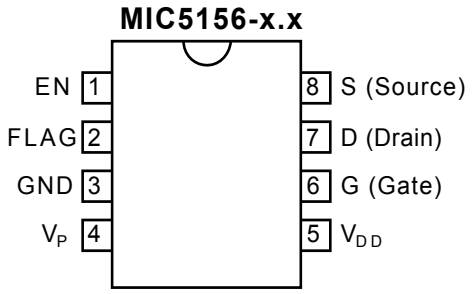

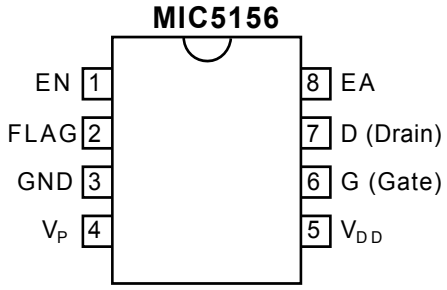

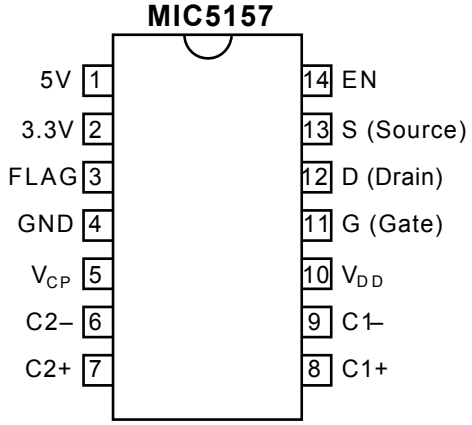

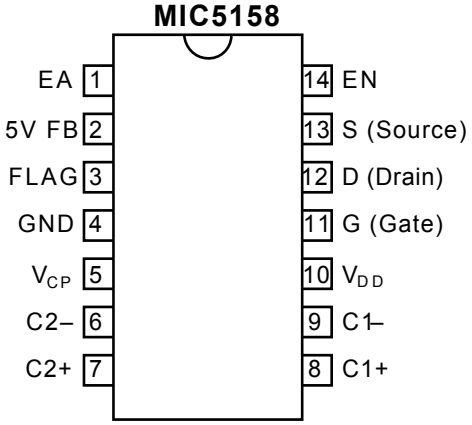

Pin Description MIC5156

Pin Number	Pin Name	Pin Function
1	EN	Enable (Input): TTL high enables regulator; TTL low shuts down regulator.
2	FLAG	Output Flag (Output): Open collector output is active (low) when V_{OUT} is more than 8% below nominal output. Circuit has 3% hysteresis.
3	GND	Circuit ground.
4	V_P	N-channel Gate Drive Supply Voltage: User supplied voltage for driving the gate of the external MOSFET.
5	V_{DD}	Supply Voltage (Input): Supply voltage connection. Connect sense resistor (R_S) to V_{DD} if current limiting used. Connect supply bypass capacitor to ground near device.
6	G	Gate (Output): Drives the gate of the external MOSFET.
7	D	Drain and Current Limit (Input): Connect to external MOSFET drain and external sense resistor (current limit), or connect to V_{DD} and external MOSFET drain (no current limit).
8 (3.3V, 5V)	S	Source (Input): Top of internal resistive divider chain. Connect directly to the load for best load regulation.
8 (adjustable)	EA	Error Amplifier (Input): Connect to external resistive divider.

Pin Description MIC5157, MIC5158

Pin Number	Pin Name	Pin Function
1 (MIC5157)	5V	5V Configuration (Input): Connect to S (source) pin for 5V output.
1 (MIC5158)	EA	Error Amplifier (Input): Connect to external resistive divider to obtain adjustable output.
2 (MIC5157)	3.3V	3.3V Configuration (Input): Connect to S (source) pin for 3.3V output.
2 (MIC5158)	5VFB	5V Feedback (Input): Connect to EA for fixed 5V output.
3	FLAG	Output Voltage Flag (Output): Open collector is active (low) when V_{OUT} is 8% or more below its nominal value.
4	GND	Circuit ground.
5	V_{CP}	Voltage Tripler Output [Filter Capacitor]. Connect a 1 to 10µF capacitor to ground.
6	C2–	Charge Pump Capacitor 2: Second stage of internal voltage tripler. Connect a 0.1µF capacitor from C2+ to C2–.
7	C2+	Charge Pump Capacitor 2: See C2– pin 6.
8	C1+	Charge Pump Capacitor 1: First stage of internal voltage tripler. Connect a 0.1µF capacitor from C1+ to C1–.
9	C1–	Charge Pump Capacitor 1: See C1+ pin 8.
10	V_{DD}	Supply Voltage (Input): Supply voltage connection. Connect sense resistor (R_S) to V_{DD} if current limiting used. Connect supply bypass capacitor to ground near device.
11	G	Gate (Output): Connect to External MOSFET gate.
12	D	Drain and Current Limit (Input): Connect to external MOSFET drain and external sense resistor (current limit), or connect to V_{DD} and external MOSFET drain (no current limit).
13 (MIC5157)	S	Source and 3.3V/5V Configuration: Top of internal resistor chain. Connect to source of external MOSFET for 3.3V, 5V, and 12V operation. Also see 3.3V and 5V pin descriptions.
13 (MIC5158)	S	Source (Input): Top of internal resistor chain. Connect to top of external resistive divider and source of external MOSFET.
14	EN	Enable (Input): TTL high enables regulator; TTL low shuts down regulator.

Absolute Maximum Ratings (Note 1)

Supply Input (V_{DD}) ..... +38V
Enable Input (V_{EN}) ..... –0.3V to 36V
Gate Output (V_G) MIC5156 ..... +55V
Charge Pump Node (V_{CP}) MIC5157/8 ..... +55V
Source Connection (V_S) ..... 1.3 to +36V
Flag (V_{FLAG}) ..... –0.3 to +40V
Storage Temperature (T_S) ..... –65°C to +150°C
Lead Temperature (soldering 10 sec.) ..... 300°C

Operating Ratings (Note 2)

Ambient Temperature Range (T_A)
MIC515xBM/BN ..... –40°C to +85°C
Junction Temperature (T_J) ..... +150°C
Thermal Resistance (θ_{JA})

Package	*MIC5156*	*MIC5157/8*
DIP	*100°C/W*	*90°C/W*
SOIC	*160°C/W*	*120°C/W*

Electrical Characteristics (Note 5)

V_{DD} = 5V, V_{EN} = 5V; T_A = 25°C; unless noted.

Symbol	Parameter	Condition	Min	Typ	Max	Units
V_{DD}	Supply Voltage		3		36	V
$I_{DD(ON)}$ $I_{DD(OFF)}$	Supply Current MIC5156	Operating, V_{EN} = 5V Shutdown, V_{EN} = 0V		2.7 0.1	10 5	mA µA
$I_{DD(ON)}$ $I_{DD(OFF)}$	Supply Current MIC5157/8	Operating, V_{EN} = 5V Shutdown, V_{EN} = 0V		4.5 0.1	10 5	mA µA
V_{IH} V_{IL}	Enable Input Threshold	High Low	2.4	1.3 1.3	 0.8	V V
EN I_B	Enable Input Bias Current	V_{EN} = 2.4V		20	25	µA
V_{CP}	Max. Charge Pump Voltage	$V_{CP} – V_{DD}$, V_{DD} > 10V		17.5	18.5	V
f_{CP}	Charge Pump Frequency			160		kHz
$V_{OUT\ MAX}$	Maximum Gate Drive Voltage (MIC5157/8)	V_{SOURCE} = 0V V_{DD} = 3.5V V_{DD} = 5V V_{DD} = 12V	 5 9 24	 7.0 11.3 28	 9 15 30	 V V V
$V_{OUT\ MIN}$	Minimum Gate Drive Voltage	V_{SOURCE} > $V_{OUT(NOM)}$		1.0		V
V_{LIM}	Current Limit Threshold	$V_{DD} – V_D$ @ I_{LIM}	28	35	42	mV
V_S	Source Voltage	Short G (gate) to (S) source, **Note 4** MIC5156-3.3 MIC5156-5.0 MIC5157, 3.3V pin to S pin (3.3V config.) MIC5157, 5V pin to S pin (5V config.) MIC5157, V_{DD} = 7V, (12V config.) MIC5158, 5V FB pin to EA pin (5V config.)	 3.267 4.950 3.250 4.950 11.70 4.925	 3.3 5.0 3.3 5.0 12 5.0	 3.333 5.050 3.350 5.050 12.30 5.075	 V V V V V V
V_{BG}	Bandgap Reference Voltage	MIC5156 [adjustable] and MIC5158	1.222	1.235	1.248	V
V_{LR}	Output Voltage Line Regulation	5V < V_{DD} < 15V, V_{OUT} = 3.3V		2	7	mV
$V_{GS\ MAX}$	Gate to Source Clamp		14	16.6	20	V
V_{FT}	Flag Comparator Threshold	% of nominal V_{SOURCE}		92		%
V_{FH}	Flag Comparator Hysteresis	% of nominal V_{SOURCE}		3		%
V_{SAT}	Flag Comparator Sat. Voltage	I_{FLAG} = 1mA		0.09	0.2	V

Note 1. Exceeding the absolute maximum rating may damage the device.

Note 2. The device is not guaranteed to function outside its operating rating.

Note 3. Devices are ESD sensitive. Handling precautions recommended.

Note 4. Test configuration. External MOSFET not used.

Note 5. Specification for packaged product only.

Typical Characteristics

3.3V Regulator Output Voltage vs. Temperature

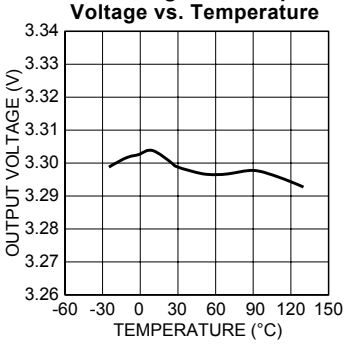

5.0V Regulator Output Voltage vs. Temperature

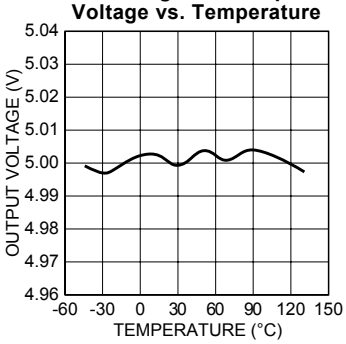

MIC5157/8 Turn-On Response Time for 3.3V

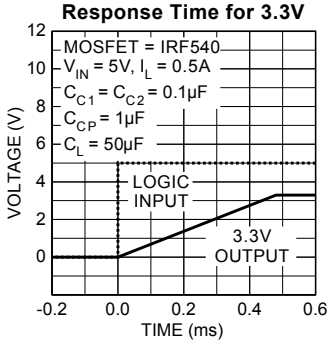

MIC5157/8 On-State Supply Current vs. Supply Voltage

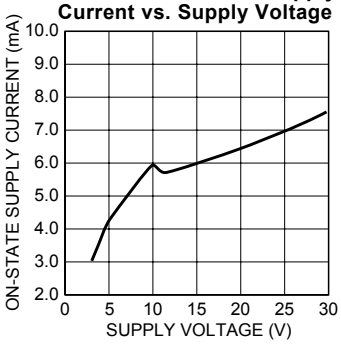

MIC5157/8 On-State Supply Current vs. Temperature

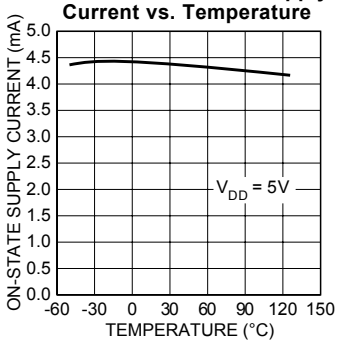

Off-State Supply Current vs. Temperature

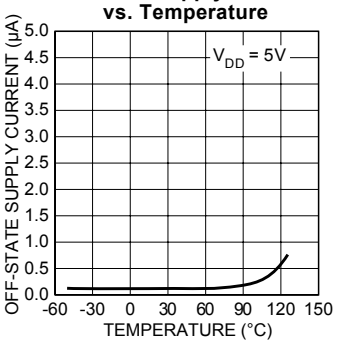

Charge-Pump Output Voltage vs. Supply Voltage

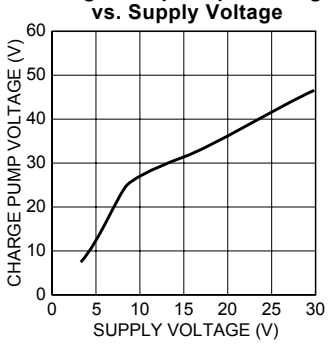

Flag Output Voltage vs. Temperature

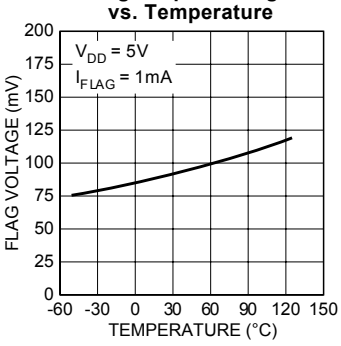

Flag Output Voltage vs. Flag Current

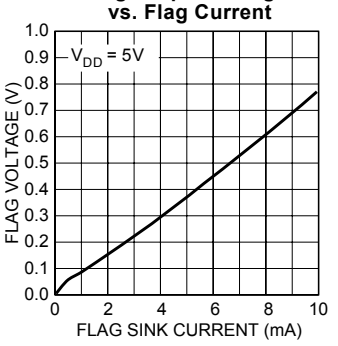

Enable Threshold Voltage vs. Temperature

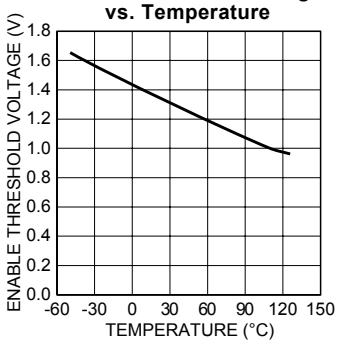

Enable Input Bias Current vs. Enable Voltage

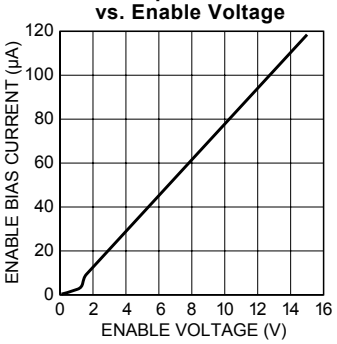

Current Limit Threshold vs. Temperature

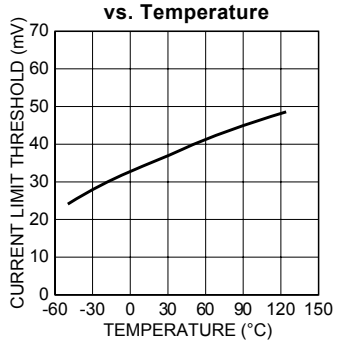

Block Diagram MIC5156

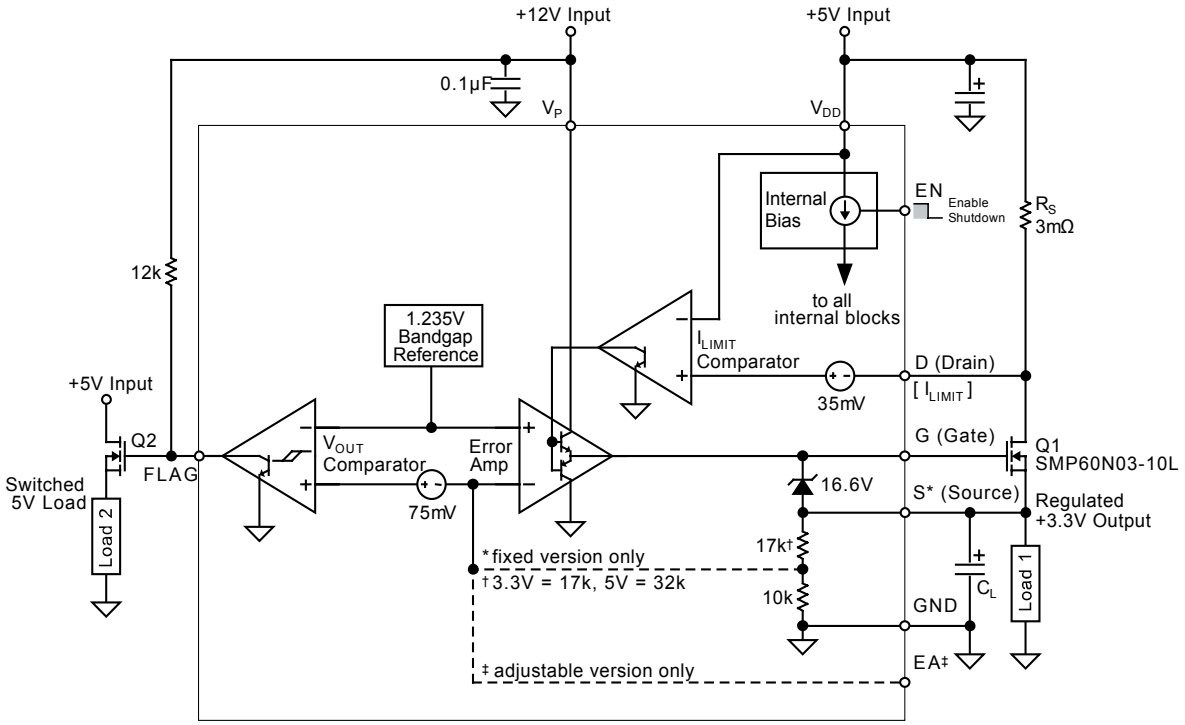

Block Diagram with External Components
Fixed 3.3V Power Supply with 5.0V Load Switch

Block Diagram MIC5157

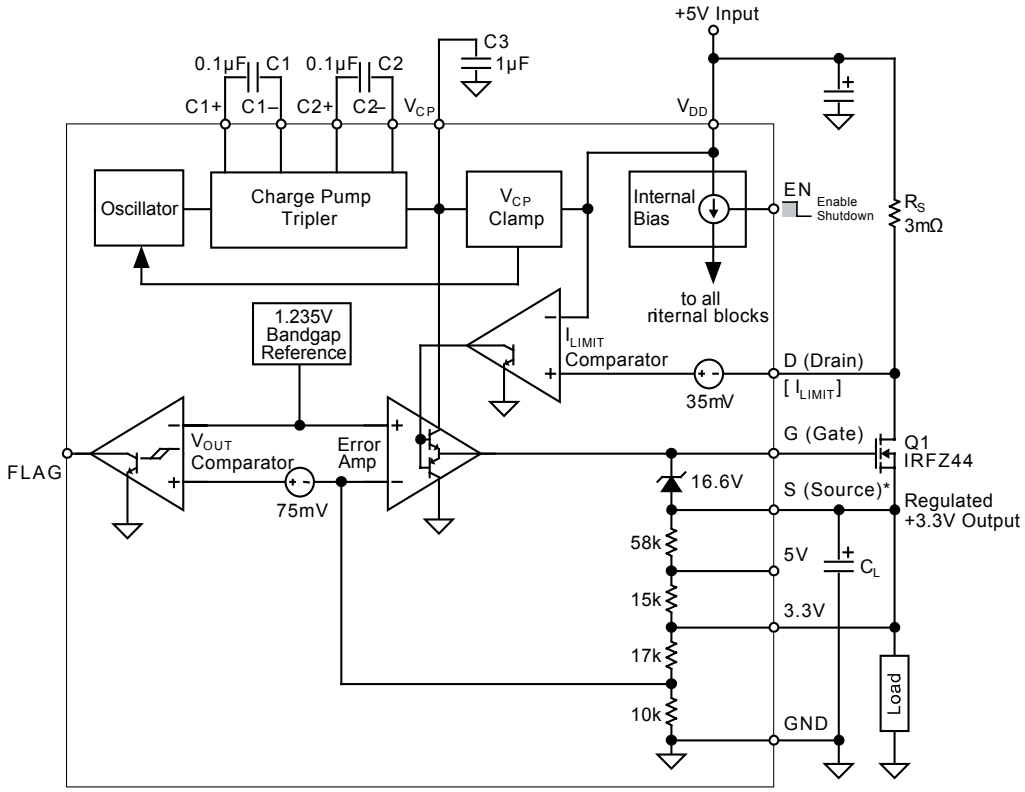

Block Diagram with External Components
Fixed 3.3V 10A Power Supply

Block Diagram MIC5158

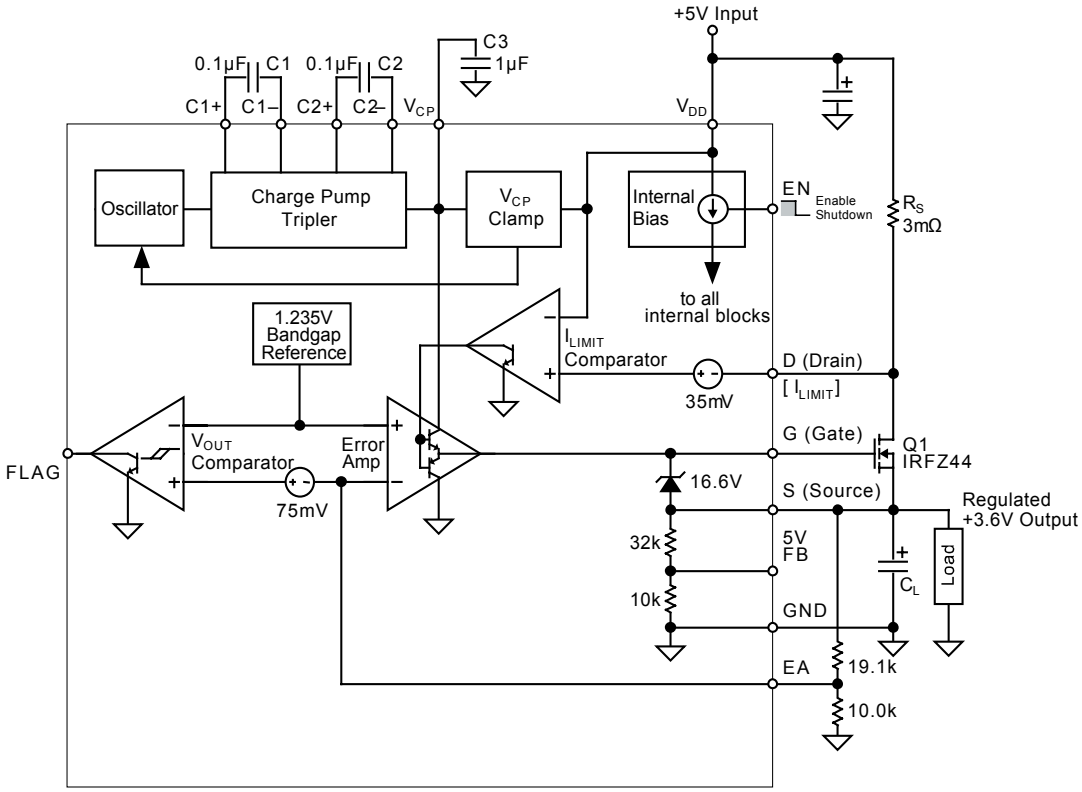

Block Diagram with External Components
Adjustable Power Supply, 3.6V Configuration

Functional Description

A *Super LDO Regulator* is a complete regulator built around Micrel's *Super LDO Regulator Controller*.

Refer to Block Diagrams MIC5156, MIC5157, and MIC5158.

Version Differences

The MIC5156 requires an external voltage for MOSFET gate drive and is available in 3.3V fixed output, 5V fixed output, or adjustable output versions. With 8-pins, the MIC5156 is the smallest of the Super LDO Regulator Controllers.

The MIC5157 and MIC5158 each have an internal charge pump which provides MOSFET gate drive voltage. The MIC5157 has a selectable fixed output of 3.3V, 5V, or 12V. The MIC5158 may be configured for a fixed 5V or adjustable output.

Enable (EN)

With at least 3.0V on V_{DD}, applying a TTL low to EN places the controller in shutdown mode. A TTL high on EN enables the internal bias circuit which powers all internal circuitry. EN must be pulled high if unused. The voltage applied to EN may be as high as 36V.

The controller draws less than 1µA in shutdown mode.

Gate Enhancement

The Super LDO Regulator Controller manages the gate-to-source enhancement voltage for an external N-channel MOSFET (regulator pass element) placed between the supply and the load. The gate-to-source voltage may vary from 1V to 16V depending upon the supply and load conditions.

Because the source voltage (output) approaches the drain voltage (input) when the regulator is in dropout and the MOSFET is fully enhanced, an additional higher supply voltage is required to produce the necessary gate-to-source enhancement. This higher gate drive voltage is provided by an external gate drive supply (MIC5156) or by an internal charge pump (MIC5157 and MIC5158).

Gate Drive Supply Voltage (MIC5156 only)

The gate drive supply voltage must not be more than 14V above the supply voltage ($V_P - V_{DD} < 14V$). The minimum necessary gate drive supply voltage is:

$$V_P = V_{OUT} + V_{GS} + 1$$

where:

V_P = gate drive supply voltage

V_{OUT} = regulator output voltage

V_{GS} = gate-to-source voltage for full MOSFET gate enhancement

The error amplifier uses the gate drive supply voltage to drive the gate of the external MOSFET. The error amplifier output can swing to within 1V of V_P.

Charge Pump (MIC5157/5158 only)

The charge pump tripler creates a dc voltage across reservoir capacitor C3. External capacitors C1 and C2 provide the necessary storage for the stages of the charge pump tripler.

The tripler's approximate dc output voltage is:

$$V_{CP} \approx 3\ (V_{DD} - 1)$$

where:

V_{CP} = charge pump output voltage

V_{DD} = supply voltage

The V_{CP} clamp circuit limits the charge pump voltage to 16V above V_{DD} by gating the charge pump oscillator ON or OFF as required. The charge pump oscillator operates at 160kHz.

The error amplifier uses the charge pump voltage to drive the gate of the external MOSFET. It provides a constant load of about 1mA to the charge pump. The error amplifier output can swing to within 1V of V_{CP}.

Although the MIC5157/8 is designed to provide gate drive using its internal charge pump, an external gate drive supply voltage can be applied to V_{CP} . When using an external gate drive supply, V_{CP} must not be forced more than 14V higher than V_{DD}.

When constant loads are driven, the ON/OFF switching of the charge pump may be evident on the output waveform. This is caused by the charge pump switching ON and rapidly increasing the supply voltage to the error amplifier. The period of this small charge pump excitation is determined by a number of factors: the input voltage, the 1mA op-amp load, any dc leakage associated with the MOSFET gate circuit, the size of the charge pump capacitors, the size of the charge pump reservoir capacitor, and the characteristics of the input voltage and load. The period is lengthened by increasing the charge pump reservoir capacitor (C3). The amplitude is reduced by weakening the charge pump—this is accomplished by reducing the size of the pump capacitors (C1 and C2). If this small burst is a problem in the application, use a 10µF reservoir capacitor at C3 and 0.01µF pump capacitors at C1 and C2. Note that the recovery time to repetitive load transients may be affected with small pump capacitors.

Gate-to-Source Clamp

A gate-to-source protective voltage clamp of 16.6V protects the MOSFET in the event that the output voltage is suddenly forced to zero volts. This prevents damage to the external MOSFET during shorted load conditions. Refer to "Charge Pump" for normal clamp circuit operation.

The source connection required by the gate-to-source clamp is not available on the adjustable version of the MIC5156.

Output Regulation

At start-up, the error amplifier feedback voltage (EA), or internal feedback on fixed versions, is below nominal when compared to the internal 1.235V bandgap reference. This forces the error amplifier output high which turns on external MOSFET Q1. Once the output reaches regulation, the controller maintains constant output voltage under changing input and load conditions by adjusting the error amplifier output voltage (gate enhancement voltage) according to the feedback voltage.

Out-of-Regulation Detection

When the output voltage is 8% or more below nominal, the open-collector FLAG output (normally high) is forced low to signal a fault condition. The FLAG output can be used to signal or control external circuitry. The FLAG output can also be used to shut down the regulator using the EN control.

Current Limiting

Super LDO Regulators perform constant-current limiting (not foldback). To implement current limiting, a sense resistor (R_S) must be placed in the "power" path between V_{DD} and D (drain).

If the voltage drop across the sense resistor reaches 35mV, the current limit comparator reduces the error amplifier output. The error amplifier output is decreased only enough to reduce the output current, keeping the voltage across the sense resistor from exceeding 35mV.

Application Information

MOSFET Selection

Standard N-channel enhancement-mode MOSFETs are acceptable for most Super LDO regulator applications.

Logic-level N-channel enhancement-mode MOSFETs may be necessary if the external gate drive voltage is too low (MIC5156), or the input voltage is too low, to provide adequate charge pump voltage (MIC5157/8) to enhance a standard MOSFET.

Circuit Layout

For the best voltage regulation, place the source, ground, and error amplifier connections as close as possible to the load. See figures (1a) and (1b).

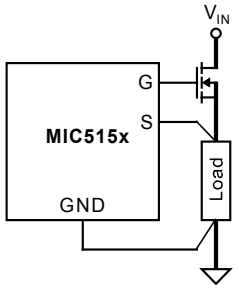

Figure 1a. Connections for Fixed Output

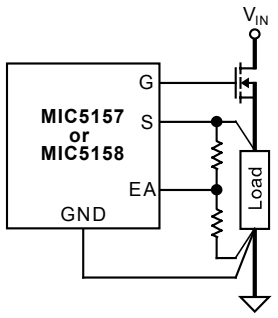

Figure 1b. Connections for Adjustable Output

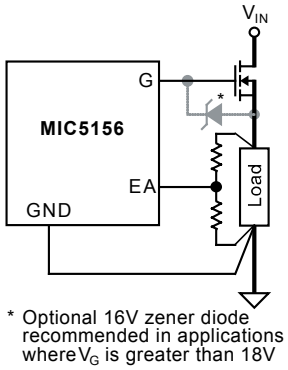

Figure 1c. MIC5156 Connections for Adjustable Output

MOSFET Gate-to-Source Protection

When using the adjustable version of the MIC5156, an external 16V zener diode placed from gate-to-source is recommended for MOSFET protection. All other versions of the Super LDO regulator controller use the internal gate-to-source clamp.

Output Voltage Configuration

Fixed Configurations

The MIC5156-3.3 and MIC5156-5.0 are preset for 3.3V and 5.0V respectively.

The MIC5157 operates at 3.3V when the 3.3V pin is connected to the S (source) pin; 5.0V when the 5.0V pin is connected to the S pin; or 12V if the 3.3V and 5.0V pins are open.

The MIC5158 operates at a fixed 5V (without an external resistive divider) if the 5V FB pin is connected to EA.

Adjustable Configurations

Micrel's MIC5156 [adjustable] and MIC5158 require an external resistive divider to set the output voltage from 1.235V to 36V. For best results, use a 10kΩ resistor for R2. See equation (1) and figure (2).

1) $$R_1 = 1 \times 10^4 \left(\frac{V_{OUT}}{1.235} - 1 \right)$$

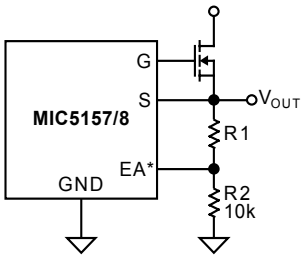

Figure 2. Typical Resistive Divider

Input Filter Capacitor

The Super LDO requires an input bypass capacitor for accommodating wide changes in load current and for decoupling the error amplifier and charge pump. A medium to large value low-ESR (equivalent series resistance) capacitor is best, mounted close to the device.

Output Filter Capacitor

An output filter capacitor may be used to reduce ripple and improve load regulation. Stable operation does not require a large capacitor, but for transient load regulation the size of the output capacitor may become a consideration. Common aluminum electrolytic capacitors perform nicely; very low-ESR capacitors are not necessary. Increased capacitance (rather than reduced ESR) is preferred. The capacitor value should be large enough to provide sufficient $I = C \times dV/dt$ current consistent with the required transient load regulation quality. For a given step increase in load current, the output voltage will drop by about $dV = I \times dt/C$, where I represents the increase in load current over time t. This relationship assumes that all output current was being supplied via the MOSFET pass device prior to the load increase. Small (0.01µF to 10µF) film capacitors parallel to the load will further improve response to transient loads.

Some linear regulators specify a minimum required output filter capacitance because the capacitor determines the dominant pole of the system, and thereby stabilizes the system. This is not the situation for the MIC5156/7/8; its dominant pole is determined within its error amplifier.

Current Limiting

Current sensing requires a low-value series resistance (R_S) between V_{DD} and D (drain). Refer to the typical applications. The internal current-limiting circuit limits the voltage drop across the sense resistor to 35mV. Equation (2) provides the sense resistor value required for a given maximum current.

$$2) \quad R_S = \frac{35mV}{I_{LIM}}$$

where:

R_S = sense resistor value
I_{LIM} = maximum output current

Most current-limited applications require low-value resistors. See *Application Hints 21 and 25* for construction hints.

Non-Current-Limited Applications

For circuits not requiring current limiting, do not use a sense resistor between V_{DD} and D (drain). See figure (3). The controller will not limit current when it does not detect a 35mV drop from V_{DD} to D.

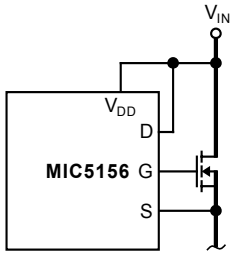

Figure 3. No Current Limit

3.3V Microprocessor Applications

For computer designs that use 3.3V microprocessors with 5V logic, the FLAG output can be used to suppress the 5V supply until the 3.3V output is in regulation. Refer to the external components shown with the MIC5156 Block Diagram.

SMPS Post Regulator Application

A Super LDO regulator can be used as a post regulator for a switch-mode power supply. The Super LDO regulator can provide a significant reduction in peak-to-peak ripple voltage.

High-Current Switch Application

All versions of the MIC5156/7/8 may be used for current-limited, high-current, high-side switching with or without voltage regulation. See figure (4a). Simply leave the “S” terminal open. A 16V zener diode from the gate to the source of the MOSFET protects the MOSFET from overdrive during fault conditions.

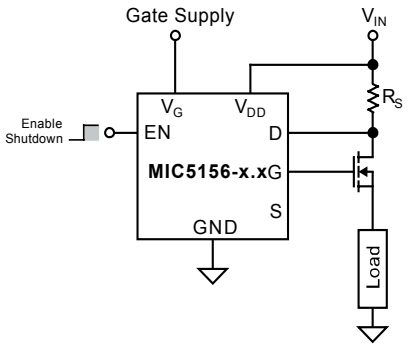

Figure 4a. High-Side Switch

If a MIC5157 or MIC5158 is used and is shutdown for a given time, the charge pump reservoir V_{CP} will bleed off. If recharging the reservoir causes an unacceptable delay in the load reaching its operating voltage, do not use the EN pin for on/off control. Instead, use the MIC5158, hold EN high to keep the charge pump in continuous operation, and switch the MOSFET on or off by overriding the error amplifier input as shown in figure (4b).

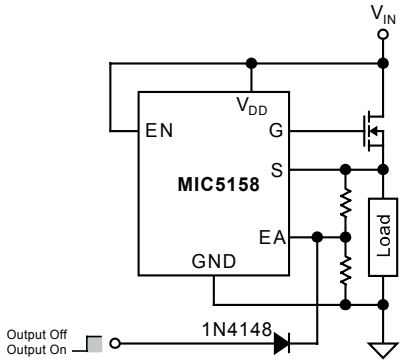

Figure 4b. Fast High-Side Switch

Battery Charger Application

The MIC5158 may be used in constant-current applications such as battery chargers. See figure (5). The regulator supplies a constant-current (35mV ÷ R3) until the battery approaches the float voltage:

$$V_{FL} = 1.235 \left(1 + \frac{R1}{R2}\right)$$

where:

V_{FL} = float voltage

At float voltage, the MOSFET is shut off. A trickle charge is supplied by R4.

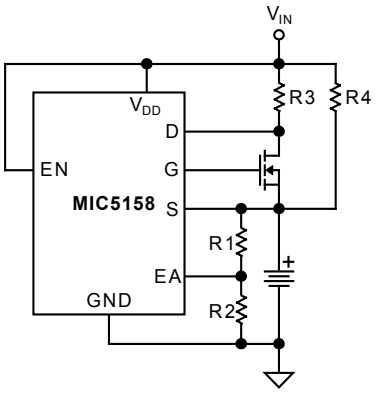

Figure 5. Battery Charger Concept

Uninterruptible Power Supply

The MIC5157 and two N-channel MOSFETs provide battery switching for uninterruptible power as shown in figure (6). Two MOSFETs are placed source-to-source to prevent current flow through their body diodes when switched off. The Super LDO regulator is continuously enabled to achieve fast battery switch-in. Careful attention must be paid to the ac-line monitoring circuitry to ensure that the output voltage does not fall below design limits while the battery is being switched in.

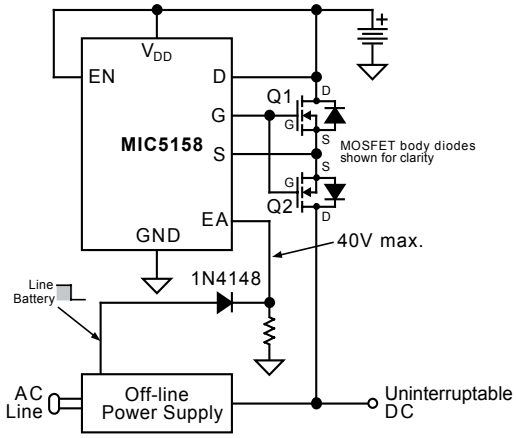

Figure 6. UPS Power Supply Concept

Package Information

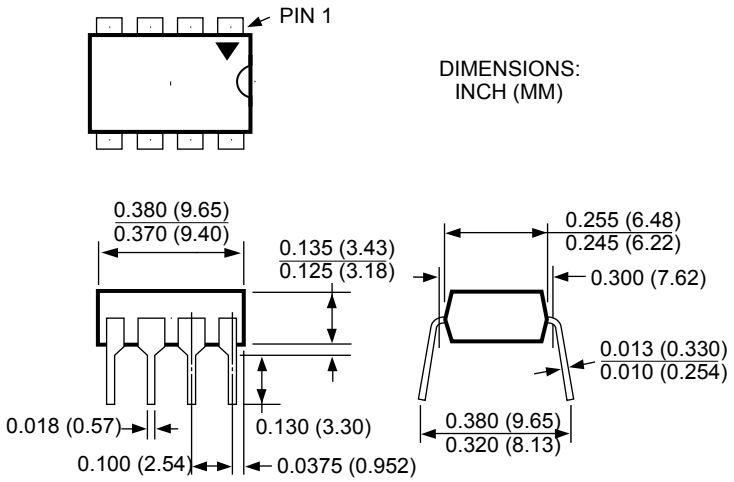

8-Pin DIP (N)

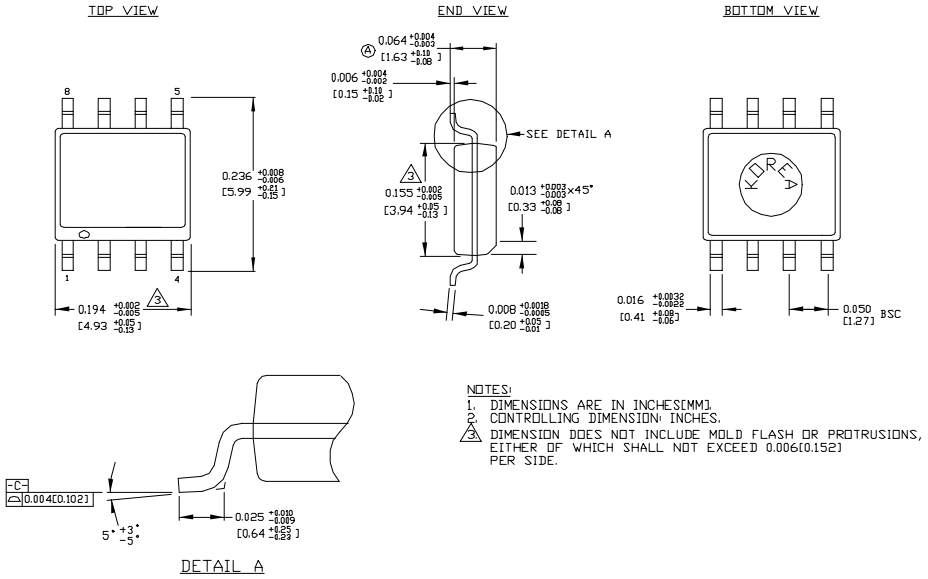

8-Pin SOIC (M)

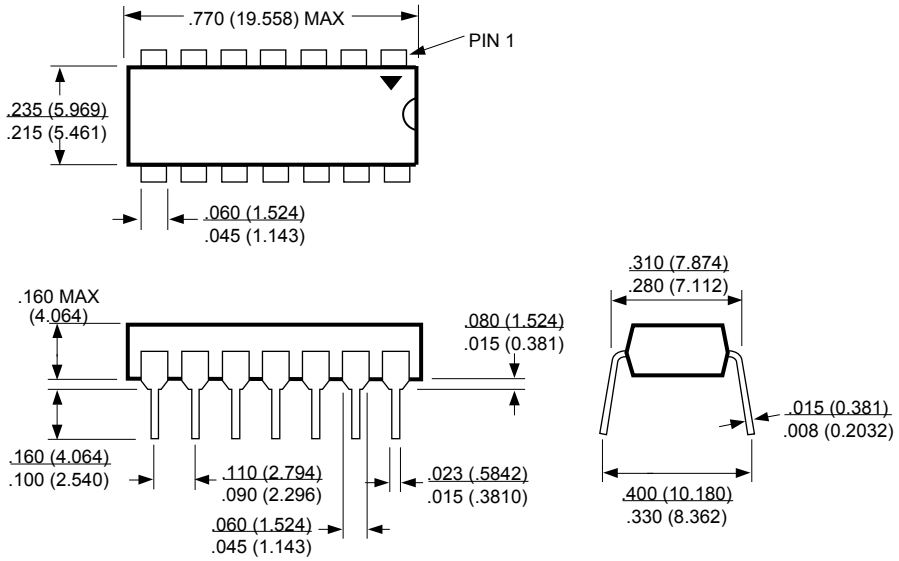

14-Pin DIP (N)

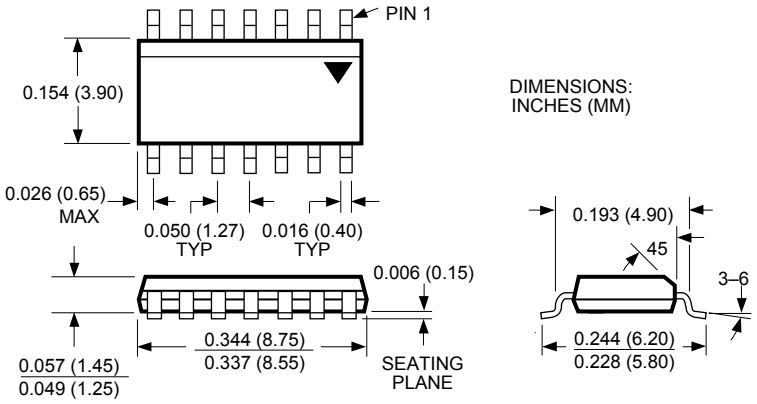

14-Pin SOIC (M)

MICREL INC. 2180 FORTUNE DRIVE SAN JOSE, CA 95131 USA

TEL + 1 (408) 944-0800 FAX + 1 (408) 474-1000 WEB http://www.micrel.com

This information furnished by Micrel in this data sheet is believed to be accurate and reliable. However no responsibility is assumed by Micrel for its use. Micrel reserves the right to change circuitry and specifications at any time without notification to the customer.

Micrel Products are not designed or authorized for use as components in life support appliances, devices or systems where malfunction of a product can reasonably be expected to result in personal injury. Life support devices or systems are devices or systems that (a) are intended for surgical implant into the body or (b) support or sustain life, and whose failure to perform can be reasonably expected to result in a significant injury to the user. A Purchaser's use or sale of Micrel Products for use in life support appliances, devices or systems is a Purchaser's own risk and Purchaser agrees to fully indemnify Micrel for any damages resulting from such use or sale.

© 1999 Micrel, Inc.