MIC2042/2043

Single Channel, High Current, Low Voltage, Protected Power Distribution Switch

General Description

The MIC2042 and MIC2043 are high-side MOSFET switches optimized for general purpose power distribution applications which require circuit protection. The devices switch up to 5.5V and as low as 0.8V while offering both programmable current limiting and thermal shutdown to protect the device and the load. A fault status output is provided in order to detect overcurrent and thermal shutdown fault conditions. Both devices employ soft-start circuitry to minimize the inrush current in applications that employ highly capacitive loads. Additionally, for tighter control over inrush current during start-up, the output slew-rate may be adjusted by an external capacitor.

The MIC2043 features a auto-reset circuit breaker mode that latches the output off upon detecting an overcurrent condition lasting more than 28ms. The output is reset by removing or reducing the load.

All support documentation can be found on Micrel's web site at www.micrel.com.

Features

- 60mΩ max. on-resistance
- 0.8V to 5.5V operating range
- Adjustable current limit
- Power-Good detection
- Up to 3A continuous output current
- Short-circuit protection with thermal shutdown
- Adjustable slew-rate control
- Circuit breaker mode (MIC2043)
- Fault status flag
- Undervoltage lockout
- Output MOSFET reverse current flow block when disabled
- Very fast reaction to short-circuits
- Low quiescent current

Applications

- Docking stations
- Notebook PCs
- PDAs
- Hot swap board insertions
- RAID controllers
- USB hosts
- ACPI power distribution

Typical Application

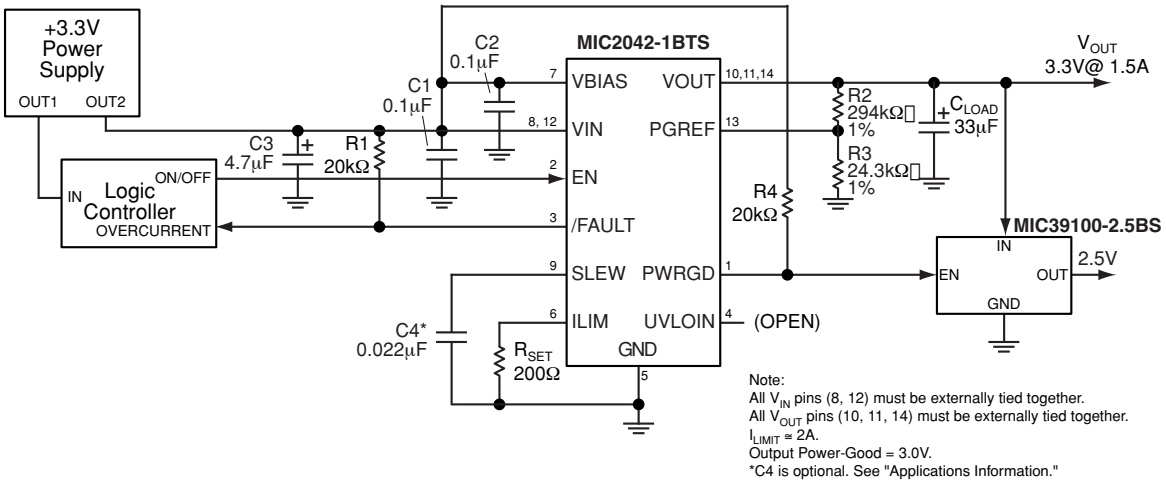

Note:
All V_{IN} pins (8, 12) must be externally tied together.
All V_{OUT} pins (10, 11, 14) must be externally tied together.
$I_{LIMIT} \cong 2A$.
Output Power-Good = 3.0V.
*C4 is optional. See "Applications Information."

Ordering Information

Part Number		Enable	Circuit Breaker	V_{BIAS}	V_{IN} Range	Package
Standard	**Pb-Free**					
MIC2042-1BM	MIC2042-1YM	Active High			1.6V to 5.5V	8-pin SOP
MIC2042-2BM	MIC2042-2YM	Active Low			1.6V to 5.5V	8-pin SOP
MIC2043-1BM	MIC2043-1YM	Active High	X		1.6V to 5.5V	8-pin SOP
MIC2043-2BM	MIC2043-2YM	Active Low	X		1.6V to 5.5V	8-pin SOP
MIC2042-1BTS	MIC2042-1YTS	Active High		X	0.8V to 5.5V	14-pin TSSOP
MIC2042-2BTS	MIC2042-2YTS	Active Low		X	0.8V to 5.5V	14-pin TSSOP
MIC2043-1BTS	MIC2043-1YTS	Active High	X	X	0.8V to 5.5V	14-pin TSSOP
MIC2043-2BTS	MIC2043-2YTS	Active Low	X	X	0.8V to 5.5V	14-pin TSSOP

Pin Configuration

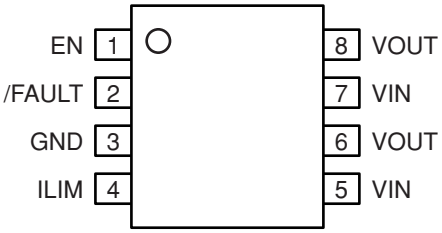

8-Pin SOP (M)

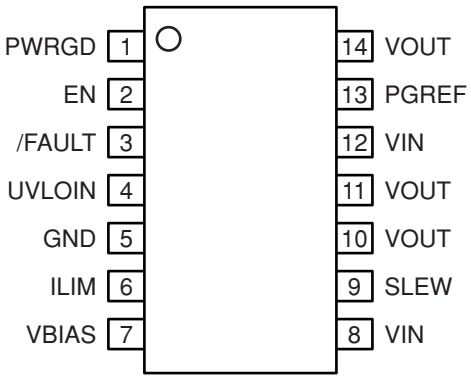

14-Pin TSSOP (TS)

Pin Description

Pin Number 8-Pin SOP	Pin Number 14-Pin TSSOP	Pin Name	Pin Function
1	2	EN	Switch Enable Input: Gate control pin of the output MOSFET available as an active high (–1) or active low (–2) input signal.
2	3	/FAULT	Fault Status Output: Open-drain N-Channel device, active low. This pin indicates an overcurrent or thermal shutdown condition. For an overcurrent event, /FAULT is asserted if the duration of the overcurrent condition lasts longer than 28ms.
3	5	GND	Ground Connection: Tie to analog ground.
N/A	9	SLEW	Slew-Rate Control Input: A capacitor connected between this pin and ground will reduce (slow) the output slew-rate. The output turn-on time must be less than the nominal flag delay of 28ms in order to avoid nuisance tripping of the /FAULT output since V_{OUT} must be "fully on" (i.e., within 200mV of the voltage at the input) before the /FAULT signal delay elapses. The capacitor requires a 16V rating, or greater, 25V is recommended. See "Applications Information," "Output Slew-Rate Adjustment" for further detail.
4	6	ILIM	Current Limit Set: A resistor, R_{SET}, connected to this pin sets the current limit threshold as CLF/R_{SET}, where CLF is the current limit factor specified in the "Electrical Characteristics" table. For the MIC2042/43, the continuous output current range is 0.5A to 3A.
5,7	8,12	VIN	Switch Input Supply: The drain of the output MOSFET. The range of input for the switch is 0.8V to 5.5V. These pins must be externally connected together to achieve rated performance.
6,8	10,11,14	VOUT	Switch Output: The source of the output MOSFET. These pins must be externally connected together to achieve rated performance.
N/A	7	VBIAS	Bias Supply Input: This input pin supplies power to operate the switch and internal circuitry. The input range for V_{BIAS} is 1.6V to 5.5V. When switched voltage (V_{IN}) is between 1.6V to 5.5V and the use of a single supply is desired, connect VBIAS to VIN externally.
N/A	13	PGREF	Power-Good Threshold (Input): Analog reference used to specify the PWRGD threshold. When the voltage at this pin exceeds its threshold, V_{TH}, PWRGD is asserted high. An external resistive divider network is used to determine the output voltage level at which V_{TH} is exceeded. See "Functional Description" for further detail. When the PWRGD signal is not utilized, this input should be tied to VOUT.
N/A	1	PWRGD	Power-Good Output: Active high, open-drain. This pin asserts high when the voltage at PGREF exceeds its threshold.
N/A	4	UVLOIN	Undervoltage Lockout Adjust Input: With this pin left open, the UVLO threshold is internally set to 1.45V. When the switching voltage (V_{IN}) is below 1.6V, connecting an external resistive divider to this input will lower the UVLO threshold. The total resistance of the divider must be less than 200kΩ. See "Applications Information" for further detail.

Absolute Maximum Ratings[1]

Supply Voltage
V_{IN} and V_{BIAS} 6V
/FAULT, PWRGD Output Voltage 6V
/FAULT, PWRGD Output Current 25mA
Junction Temperature (T_J) ..... Internally Limited
ESD Rating[3]
Human Body Model 3kV
Machine Model 200V

Operating Ratings[2]

Supply Voltage
V_{IN} ..... 0.8V to 5.5V
V_{BIAS} ..... 1.6V to 5.5V
Continuous Output Current ..... 0.5A to 3A
Ambient Temperature (T_A) ..... –40°C to 85°C
Package Thermal Resistance
SOP (θ_{JA}) ..... 160°C/W
TSSOP (θ_{JA}) ..... 85°C/W

Electrical Characteristics[4]

$V_{IN} = V_{BIAS} = 5V$; $T_A = 25°C$ unless specified otherwise. **Bold** indicates –40°C to +85°C.

Symbol	Parameter	Condition		Min	Typ	Max	Units
V_{IN}	Switch Input Voltage	$V_{IN} \le V_{BIAS}$	14-pin TSSOP	0.8		5.5	V
			8-pin SOP	1.6		5.5	V
V_{BIAS}	Bias Supply Voltage	(14-pin TSSOP)		1.6		5.5	V
I_{BIAS}	VBIAS Supply Current - Switch OFF VBIAS Supply Current - Switch ON **Note 5**	No load No load			0.1 300	**5** **400**	µA µA
V_{EN}	Enable Input Voltage	V_{IL}(max)			2.4	**1.5**	V
		V_{IH}(min)		**3.5**	2.5		V
V_{ENHYST}	Enable Input Threshold Hysteresis				100		mV
I_{EN}	Enable Input Current	V_{EN} = 0V to 5.5V		**–1**	.01	**1**	µA
$R_{DS(ON)}$	Switch Resistance	$V_{IN} = V_{BIAS}$ = 3V, 5V I_{OUT} = 500mA			40	**60**	mΩ
I_{LEAK}	Output Leakage Current	Output off				**10**	µA
CLF	Current Limit Factor[2]	V_{IN} = 5V, 0.5V ≤ V_{OUT} < 0.5V_{IN} 0.5A ≤ I_{OUT} ≤ 3A		**310**	395	**485**	A×Ω
		V_{IN} = 3V, 0.5V ≤ V_{OUT} < 0.5V_{IN} 0.5A ≤ I_{OUT} ≤ 3A		**320**	385	**450**	A×Ω
V_{TH}	PGREF and UVLOIN Threshold	$V_{IN} = V_{BIAS}$ = 1.6V to 5.5V (14-pin TSSOP)		**205**	225	**245**	mV
V_{LATCH}	Output Reset Threshold	V_{IN} = 0.8V to 5.5V V_{OUT} rising (MIC2043)			V_{IN}–.0.2		V
I_{LATCH}	Latched Output Off Current	Output latched off (MIC2043)		1	3	5	mA
V_{OL}	Output Low Voltage (/FAULT, PWRGD)	I_{OL} (/FAULT) = 15mA				**0.4**	V
		I_{OL} (PWRGD) = 5mA					
I_{OFF}	/FAULT, PWRGD Off Current	$V_{FAULT} = V_{PWRGD}$ = 5V				**1**	µA
V_{UV}	Undervoltage Lockout Threshold	V_{IN} rising		**1.30**	1.45	**1.58**	V
		V_{IN} falling		**1.20**	1.35	**1.50**	V
V_{UVHYST}	Undervoltage Lockout Threshold Hysteresis				100		mV
V_{UVINTH}	UVLO Adjust Pin Threshold Voltage	V_{IN} rising		**205**	225	**245**	mV
		V_{IN} falling		**185**	205	**225**	mV
$V_{UVINHYST}$	UVLO Adjust Pin Threshold Hysteresis				20		mV
	Overtemperature Threshold	T_J increasing			140		°C
		T_J decreasing			120		°C

Symbol	Parameter	Condition	Min	Typ	Max	Units
t_{FLAG}	Flag Response Delay	$V_{IN} = V_{BIAS}$ = 3V, 5V	21	28	35	ms
t_{ON}	Output Turn-on Delay	R_{LOAD} = 10Ω, C_{LOAD} = 1μF	600	800	1000	μs
t_R	Output Turn-on Rise Time	R_{LOAD} = 10Ω, C_{LOAD} = 1μF	1	1.5	2	ms
t_{OFF}	Output Turn-off Delay	R_{LOAD} = 10Ω, C_{LOAD} = 1μF		1	5	μs
t_F	Output Turn-off Fall Time	R_{LOAD} = 10Ω, C_{LOAD} = 1μF		24		μs

Notes:

1. Exceeding the absolute maximum rating may damage the device.
2. The device is not guaranteed to function outside its operating rating.
3. Devices are ESD sensitive. Handling precautions recommended. Human body model, 1.5k in series with 100pF.
4. Specification for packaged product only.
5. OFF is V_{EN} < 1.0V for MIC2042/MIC2043-1 and V_{EN} > 4.0V for MIC2042/MIC2043-2. ON is V_{EN} > 4.0V for MIC2042/MIC2043-1 and V_{EN} < 1.0V for MIC2042/MIC2043-2.
6. The current limit is determined as follows: $I_{LIM} = CLF/R_{SET}$.

Timing Diagrams

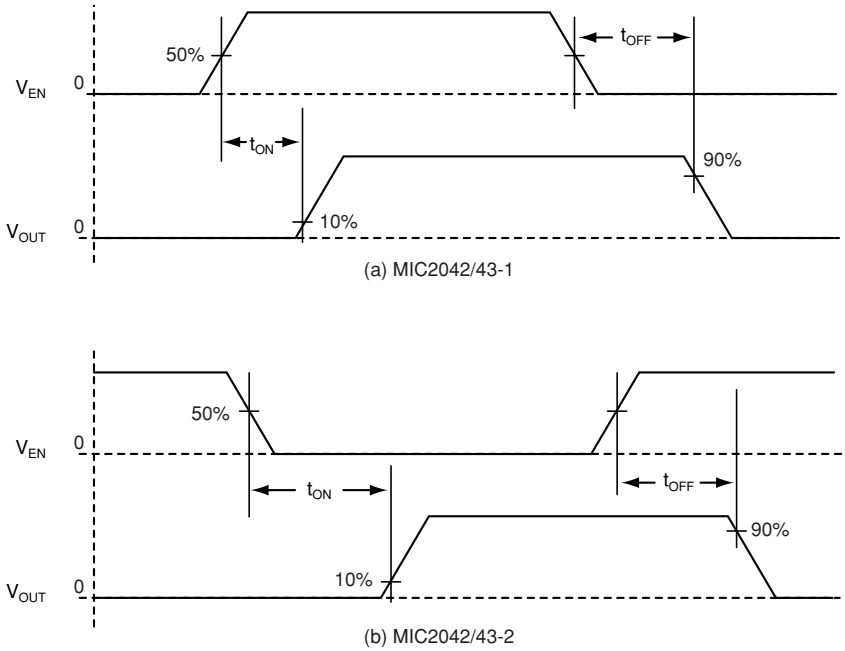

Figure 1. Turn-On/Turn-Off Delay

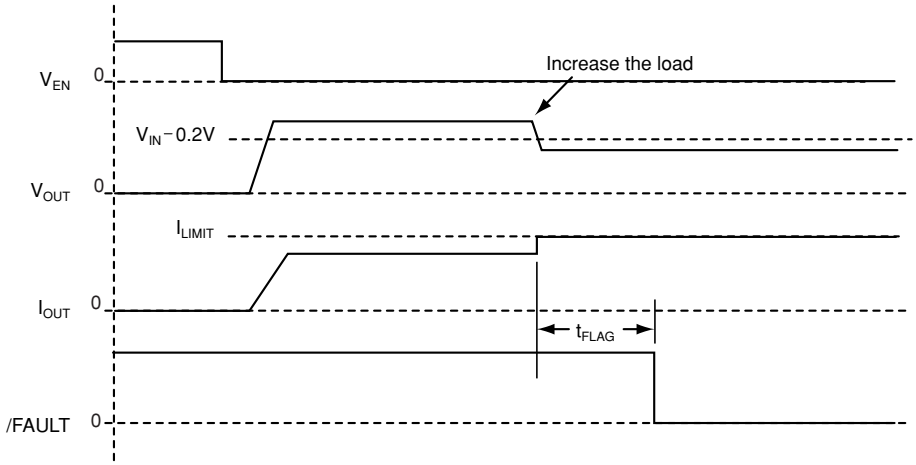

Figure 2. Overcurrent Fault Response — MIC2042-2

Test Circuit

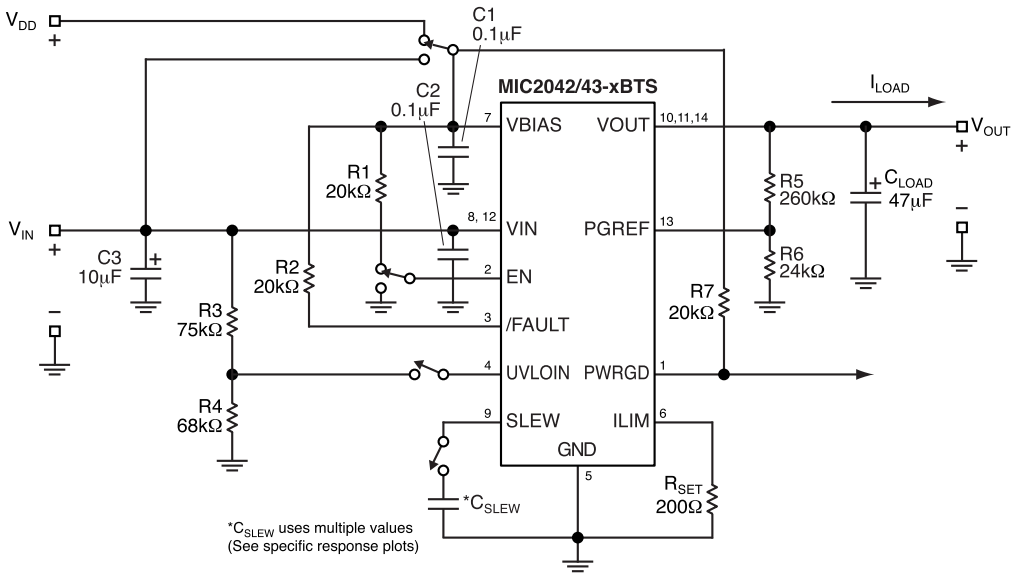

Typical Characteristics

Supply Current vs. Temperature

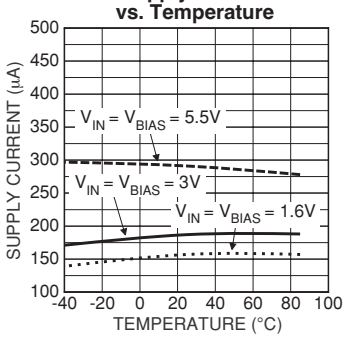

Enable Input Threshold (Falling) vs. Temperature

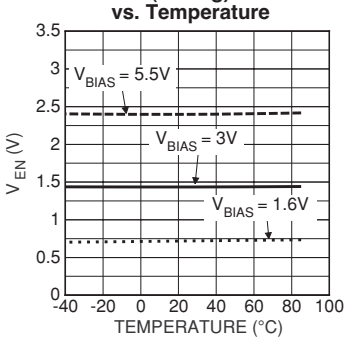

Enable Input Threshold (Rising) vs. Temperature

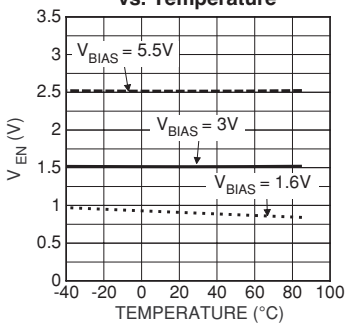

Output Leakage Current vs. Temperature

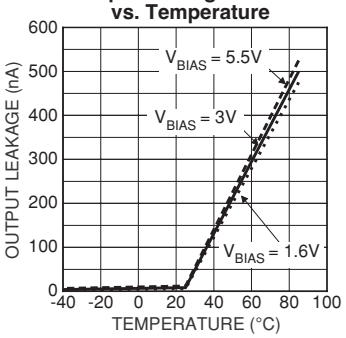

Power-Good Reference Threshold vs. Temperature

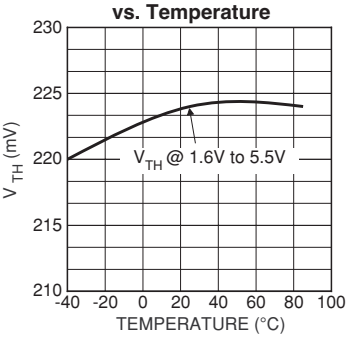

UVLO Threshold vs. Temperature

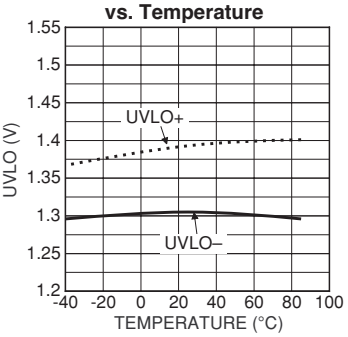

UVLO Adjust PinThreshold vs. Temperature

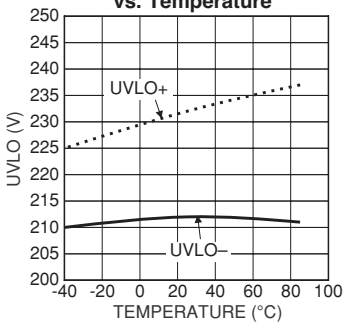

On Resistance vs. Temperature

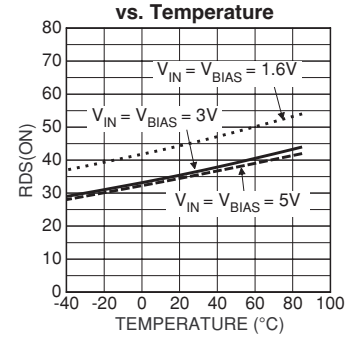

Flag Response Delay vs. Temperature

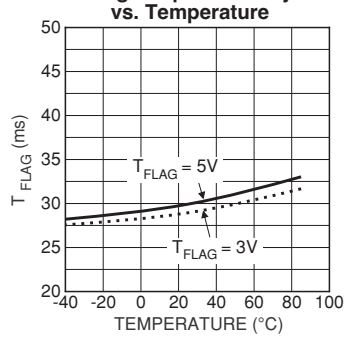

Turn-On Delay vs. Temperature

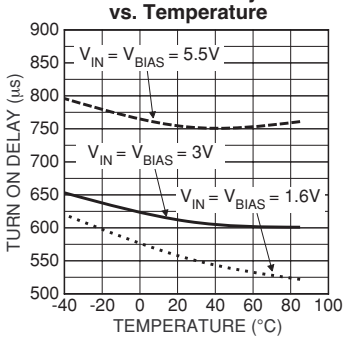

V_{BIAS} Reverse Current Flow vs. Output Voltage

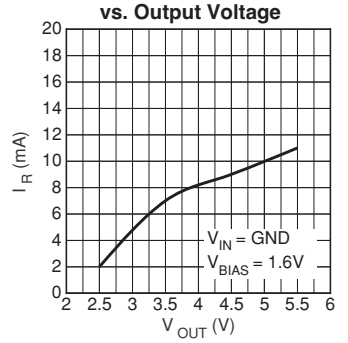

Slew Voltage vs. Temperature

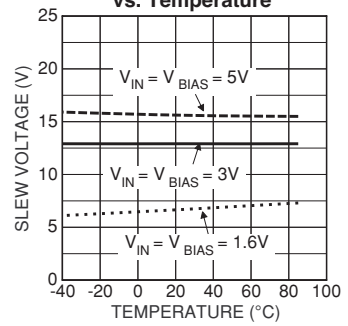

Functional Characteristics

5V Turn-On

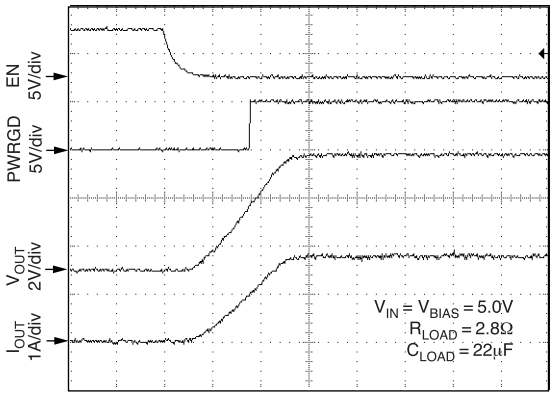

TIME (1ms/div.)

5V Turn-Off

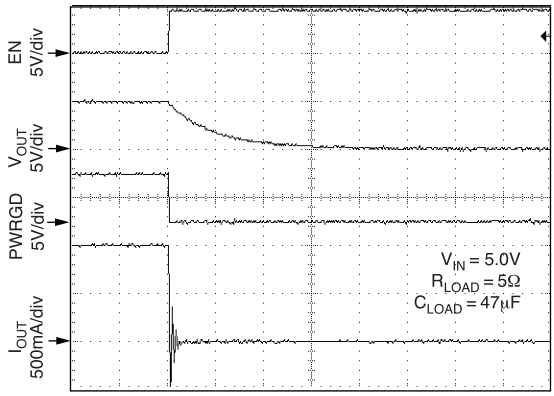

TIME (250µs/div.)

Latched Output (MIC2043)

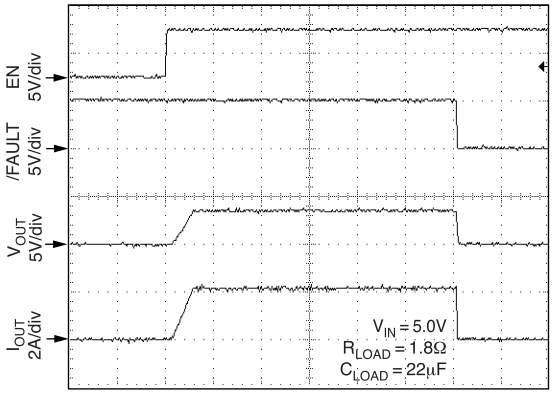

TIME (5ms/div.)

Latched Output Reset (MIC2043)

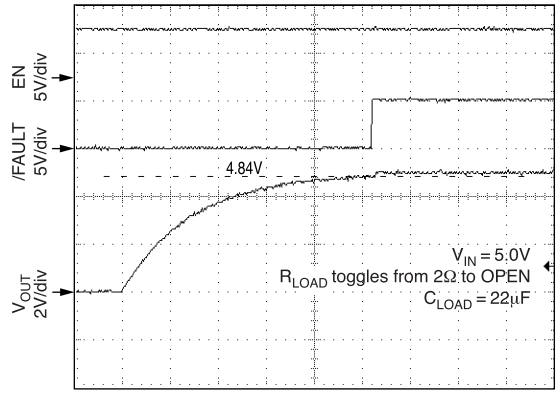

TIME (50ms/div.)

Current Limit Response

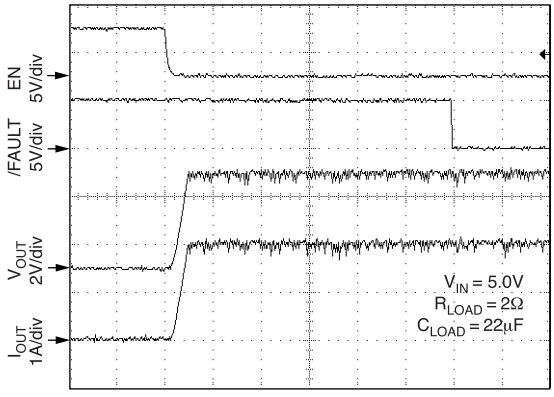

TIME (5ms/div.)

UVLO Response

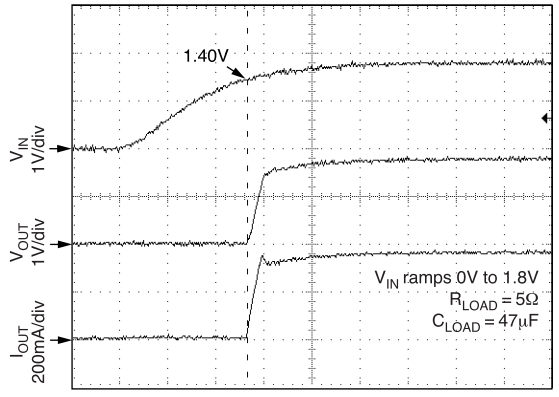

TIME (2.5ms/div.)

Output Slew Response

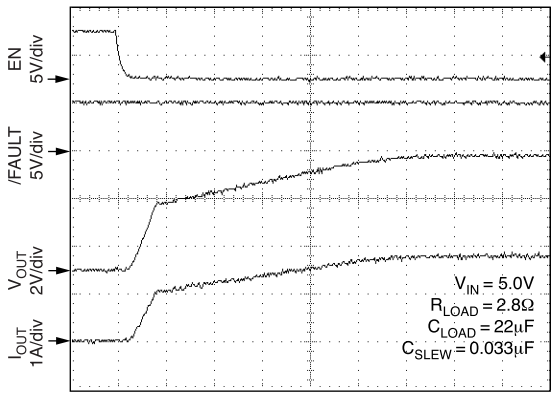

Thermal Shutdown Response

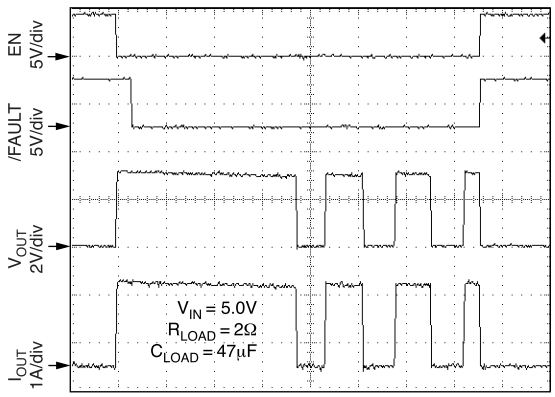

Functional Diagram

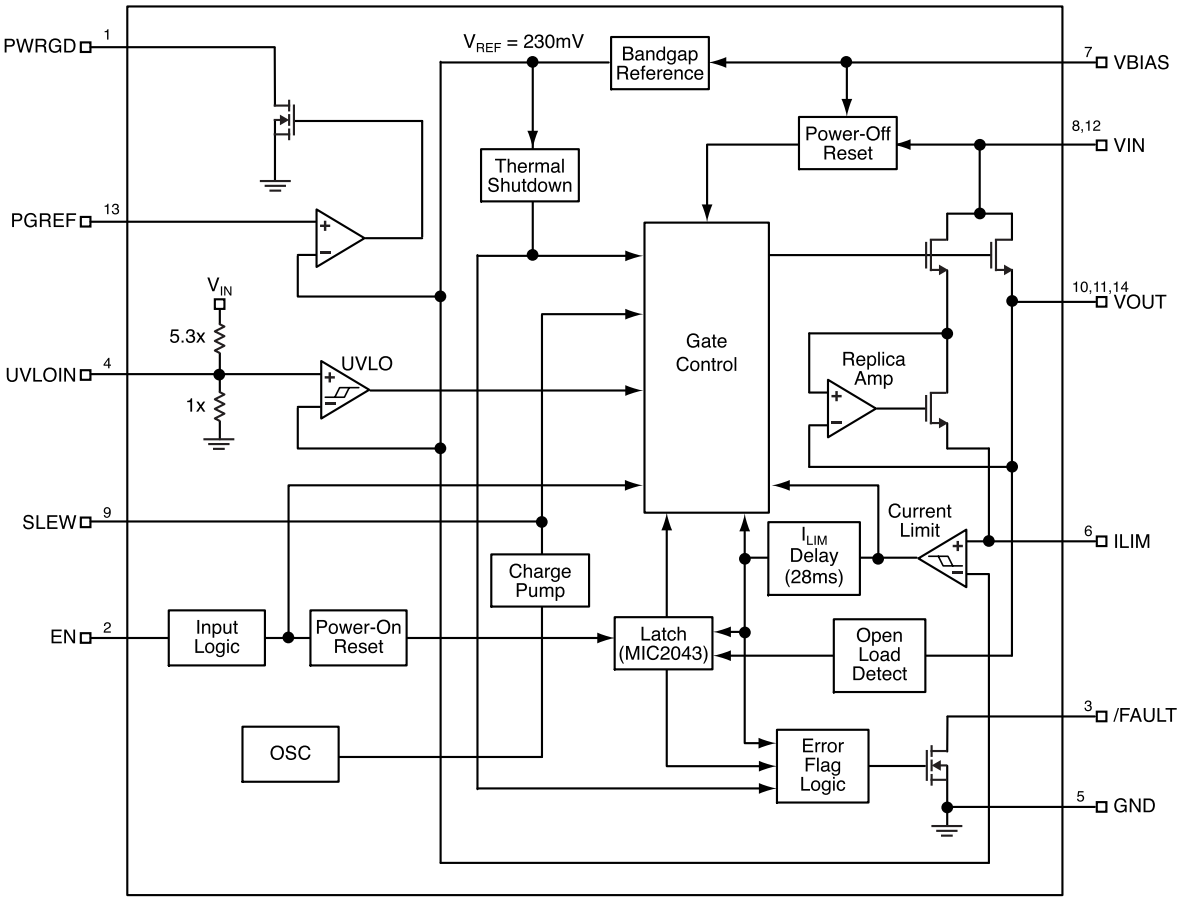

MIC2042/43 Block Diagram

Functional Description

The MIC2042 and MIC2043 are high-side N-Channel switches equipped with programmable current limit up to 3A for use in general purpose power distribution applications. The switches, available with active-high or active-low enable inputs, provide output slew-rate control and circuit protection via thermal shutdown and an optional output latch during overcurrent conditions.

Input and Output

V_{BIAS} supplies power to the internal circuitry of the switch and must be present for the switch to operate. V_{IN} is connected to the drain of the output MOSFET and sources power to the switched load. V_{IN} must be less than or equal to V_{BIAS}. V_{OUT} is the source terminal of the output MOSFET and attaches to the load. In a typical circuit, current flows from V_{IN} to V_{OUT} toward the load. If V_{OUT} is greater than V_{IN}, current will flow from V_{OUT} to V_{IN} since the switch is bi-directional when the device is enabled. When disabled (OFF), the switch will block current flow from either direction.

Enable Input

Enable, the ON/OFF control for the output switch, is a digital input available as an active-high (–1) or active-low (–2) signal. The EN pin, referenced to approximately 0.5 × VBIAS, must be driven to a clearly defined logic high or logic low. Failure to observe this requirement, or allowing EN to float, will cause the MIC2042/43 to exhibit unpredictable behavior. EN should not be allowed to go negative with respect to ground, nor allowed to exceed VBIAS. Failure to adhere to these conditions may result in damage to the device.

Undervoltage Lockout

When the switch is enabled, undervoltage lockout (UVLO) monitors the input voltage, V_{IN}, and prevents the output MOSFET from turning on until V_{IN} exceeds a predetermined level, nominally set at 1.45V. The UVLO threshold is adjustable and can be varied by applying an external resistor divider to the UVLOIN pin from VIN to GND. The resistive divider network is required when the input voltage is below 1.5V. The UVLO threshold is internally preset to 1.45V if the UVLOIN pin is left open. See “Applications Information” section.

Programmable Current Limit

The MIC2042/43 is designed to prevent damage to the external load by limiting the maximum amount of current it can draw. The current limit is programmed by an external resistor (R_{SET}) connected from ILIM to ground and becomes active when the output voltage is at least 200mV below the voltage at the input to the device. The limiting current value is defined by the current limit factor (CLF) divided by R_{SET}, and the MIC2042/43 will limit from 0.5A to 3A with a set point accuracy of ±22%. In programming the nominal current limit, the value of R_{SET} is determined using the following equation:

$$R_{SET} = \frac{CLF}{I_{LIMIT}} = \frac{(390A \times \Omega)}{I_{LIMIT}} \quad (1)$$

And given the ±22% tolerance of the current limit factor (CLF), the external resistor is bound by:

$$103\Omega \le R_{SET} \le 970\Omega \quad (2)$$

The graphs below (Figure 3) display the current limit factor characteristic over the full temperature range at the indicated voltage. These curves can be used as a point of reference in determining the maximum variation in the device’s current limit over the full temperature range. For example: With $V_{IN} = V_{BIAS} = 3.0V$ and a nominal 2A current limit ($R_{SET} = 192\Omega$), the low and high current limit settings for the MIC2042/43 would be 1.66A and 2.34A, respectively, as shown on the 3V graph using the 192Ω reference point.

When current limiting occurs, the MIC2042 and MIC2043 respond differently. Upon first reaching the limiting current both devices restrict current flow, allowing the load voltage to drop below V_{IN}. If the VIN-to-VOUT differential voltage exceeds 200mV, then a fault condition is declared and the fault delay timer is started. If the fault condition persists longer than the delay period, typically 28ms, then the /FAULT output asserts low. At this point, the MIC2042 will continue to supply current to the load at the limiting value (I_{LIMIT}), whereas the MIC2043 will latch off its output.

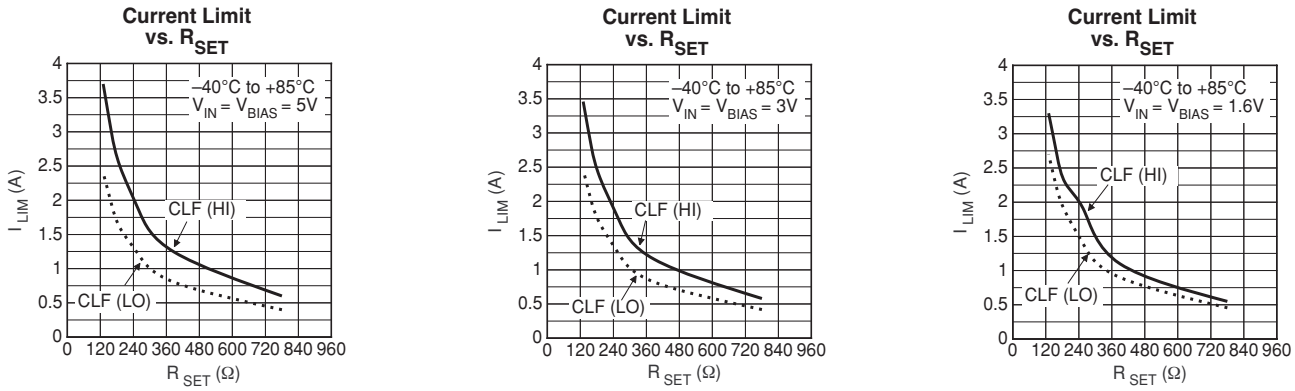

Figure 3. Current Limit Factor

/FAULT

The /FAULT signal is an N-Channel, open-drain MOSFET output. An external pull-up resistor tied to a maximum 6V rail is required for the /FAULT pin. The /FAULT pin is asserted (active-low) when either an overcurrent or thermal shutdown condition occurs. During a hot insert of a PCB or when turning on into a highly capacitive load, the resulting high transient inrush current may exceed the current limit threshold of the MIC2042/43. In the case where an overcurrent condition occurs, /FAULT will assert only after the flag delay time has elapsed, typically 28ms. This ensures that /FAULT is asserted only upon valid overcurrent conditions and that nuisance error reporting is prevented.

Thermal Shutdown

For the MIC2042, thermal shutdown is employed to protect the device from damage should the die temperature exceed safe margins due to a short circuit or an excessive load. Thermal shutdown shuts off the output MOSFET and asserts the /FAULT output if the die temperature exceeds 140°C. The MIC2042 automatically resets its output and resumes supplying current to the load when the die temperature drops to 120°C. If the fault is still present, the MIC2042 will quickly reheat and shut down again. This process of turning ON-OFF-ON is called thermal cycling and will continue as long as the power switch is enabled while the fault or excessive load is present.

Depending on PCB layout (including thermal considerations such as heat sinking), package, and ambient temperature, it may take several hundred milliseconds from the incidence of the fault to the output MOSFET being shut off.

Circuit Breaker Function (MIC2043)

The MIC2043 is designed to shut off all power to the load when a fault condition occurs, just as a circuit breaker would do. A fault condition is deemed to be anytime the output current exceeds the current limit for more than the flag delay period, nominally 28ms. Once the output shuts off, it remains off until either the fault load is removed from VOUT or the EN input is cycled ON-OFF-ON. If the fault is still present after EN has been cycled, the MIC2043 will again shut off all power to the load after 28ms. Once the fault has been removed, then normal operation will resume.

Open Load Detection

The MIC2043 will automatically reset its output when the fault load is cleared. This is accomplished by applying a small current to VOUT and watching for the voltage at VOUT to rise to within 200mV of VIN. This current is supplied by an internal resistor connected to VIN and is connected to VOUT when MIC2043 latches off.

Power-Good Detection

The MIC2042/43 can detect when the output voltage is above or below a preset threshold that is monitored by a comparator at the PGREF input. The PWRGD signal is an N-Channel open-drain MOSFET output and an external pull-up resistor up to a 6V maximum rail is required for the PWRGD pin. Whenever the voltage at the PGREF pin exceeds its threshold (V_{TH}), typically 230mV, the PWRGD output is asserted. Using the typical applications circuit from page 1 that switches 3.3V as an example, the output voltage threshold determining “power is good” is calculated by the following equation:

$$V_{OUT(GOOD)} = V_{TH} \times \left(1 + \frac{R2}{R3}\right) \quad (3)$$

In substituting the resistor values of the circuit and the typical PGREF threshold, the resulting $V_{OUT(GOOD)}$ is calculated as 3.0V for this 3.3V switching application.

Slew

The MIC2042/43’s output rise time is controlled at turn-on to a minimum of 1.5ms and is controlled by an internal slew-rate limiting circuit. A slew-rate adjustment control pin is available for applications requiring slower rise times. By placing a capacitor between SLEW and ground, longer rise times can be achieved. For further detail, see the “Applications Information” section.

Applications Information

Input and Output

Supply Bypass Filtering

The need for input supply bypass is necessary due to several factors, most notably the input/output inductance along the power path, operating current and current limit, and output capacitance. A 0.1μF to 0.47μF bypass capacitor positioned very close to the VIN pin to GND of the device is strongly recommended to filter high frequency oscillations due to inductance. Also, a sufficient bypass capacitor positioned close to the input source to the switch is strongly advised in order to suppress supply transient spikes and to limit input voltage droop. Inrush current increases with larger output capacitance, thus the minimum value of this capacitor will require experimental determination for the intended application and design. A good starting point is a capacitor between 4.7μF to 15μF. Without these bypass capacitors, an extreme overload condition such as a short circuit, or a large capacitive load, may cause either the input supply to exceed the maximum rating of 6V and possibly cause damage to the internal control circuitry or allow the input supply to droop and fall out of regulation and/or below the minimum operating voltage of the device.

Output Capacitance

When the MIC2042 die exceeds the overtemperature threshold of approximately 140°C, the device can enter into a thermal shutdown mode if the die temperature falls below 120°C and then rises above 140°C in a continuous cycle. With the VOUT and /FAULT outputs cycling on and off, the MIC2042 will reset the /FAULT while in an overtemperature fault condition if the output voltage is allowed to swing below ground. The inductance present at the output must be neutralized by capacitance in order to ensure that the output does not fall below ground. In order to counter the board parasitic inductance and the inductance of relatively short-length power cable (≤ 1ft., 16 to 20 gauge wire), a minimum output capacitance of 22μF is strongly recommended and should be placed close to the VOUT pin of the MIC2042. For applications that use more than a foot of cable, an additional 10μF/ft. is recommended.

Reverse Current Block

The MIC2042/43 provides reverse current flow block through the output MOSFET if the voltage at VOUT is greater than VIN when the device is disabled. The VBIAS supply pin has a limited reverse current flow if the voltage at VOUT is pulled above VBIAS when the device is disabled. A graph of the V_{BIAS} reverse current flow is shown in the "Functional Characteristics" plots. The reverse current for V_{BIAS} can be completely blocked by inserting a Schottky diode from the VBIAS pin (cathode) to the supply (anode). However, the minimum voltage of 1.6V must be supplied to VBIAS after accounting for the voltage drop across the diode.

Output Slew-Rate Adjustment

The output slew-rate for the MIC2042/43 can be slowed down by the capacitor (16V rating, minimum; 25V suggested) between SLEW and GND. The slew-rate control circuitry is independent of the load capacitance and exhibits a non-linear response. See the "Functional Characteristics" plots. Table 1 shows the rise time for various standard capacitor values. Additionally, the output turn-on time must be less than the nominal flag delay of 28ms in order to avoid nuisance tripping of the /FAULT output. This limit is imposed by the current limiting circuitry which monitors the (VIN – VOUT) differential voltage and concludes a fault condition is present if the differential voltage exceeds 200mV for more than the flag delay period. For the MIC2043, the /FAULT will assert and the output will latch off if the output is not within 200mV of the input before the flag delay times out. When using the active-low (–2) option with the EN input tied to ground, slew control is functional during initial start-up but does not function upon resetting the input power to the device. In order for the SLEW control to operate during consecutive system restarts, the EN pin must reset (toggle OFF to ON).

UVLO Threshold Setting With Low Input Voltages

When the switching voltage is below 1.6V, the device's standard UVLO threshold (1.45V nominal) will hinder the output MOSFET in switching VIN to VOUT. In this case, the use of the UVLOIN pin is required to override the standard UVLO threshold and set a new, lower threshold for the lower input voltage. An external resistive divider network connected at the UVLOIN pin is used to set the new threshold. Due to the ratio of the internal components, the total series resistance of the external resistive divider should not exceed 200kΩ. The circuit shown in Figure 4 illustrates an application that switches 0.8V while the device is powered from a separate 2.5V power supply. The UVLO threshold is set by the following equation:

$$V_{UVTH} = 0.23V \times \left(1 + \frac{R2}{R3}\right) \quad (4)$$

In substituting the resistor values from Figure 4, the resulting UVLO threshold (V_{UVTH}) is calculated as 0.6V for this 0.8V switching application. When using the UVLOIN pin to set a new UVLO threshold, an optional 0.1μF to 1.0μF capacitor from UVLOIN to GND may be used as a glitch filter in order to avoid nuisance tripping of the UVLO threshold. If the UVLOIN pin is not in use, this pin should be left open (floating). The use of a pull-down resistor to ground will offset the ratio of the internal resistive divider to this pin resulting in a shift in the UVLO threshold. To bypass (disable) UVLO, connect the UVLOIN pin directly to the VIN pin of the MIC2042/43.

Conditions: $V_{IN} = V_{BIAS} = 5V/3V$; $C_{LOAD} = 47\mu F$; $I_{LOAD} = 1A$

C_{SLEW} (μF)	Rise Time (ms)	
	5V	3V
0.01	3	4.75
0.033	10.5	15
0.047	14	21
0.1	32	46

Table 1. Typical Output Rise Time for Various C_{SLEW}

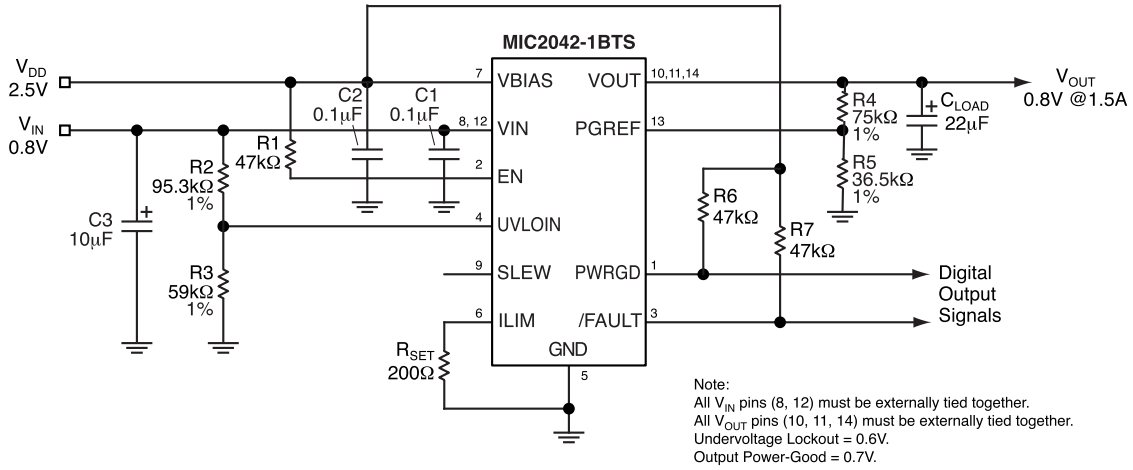

Figure 4. Lower UVLO Setting

Power Dissipation

Power dissipation depends on several factors such as the load, PCB layout, ambient temperature, and package type. The following equations can be used to calculate power dissipation and die temperature.

Calculation of power dissipation can be accomplished by the following equation:

$$P_D = R_{DS(ON)} \times (I_{OUT})^2 \quad (5)$$

To relate this to junction temperature, the following equation can be used:

$$T_J = P_D \times R\theta_{JA} + T_A \quad (6)$$

where T_J = junction temperature, T_A = ambient temperature and $R\theta_{JA}$ is the thermal resistance of the package.

Printed Circuit Board Hot-Plug

The MIC2042/43 are ideal inrush current limiting power switches suitable for hot-plug applications. Due to the integrated charge pump, the MIC2042/43 present a high impedance when in the off state and the device slowly becomes a low impedance as it turns on. This effectively isolates power supplies from highly capacitive loads by reducing inrush current during hot-plug events. This same feature also can be used for soft-start requirements.

PCB Layout Recommendations

The MIC2042 and MIC2043 have very low on-resistance, typically 40mΩ, and the switches can provide up to 3A of continuous output current. Under such heavy loads, the power consumed by the devices may cause the devices to heat up considerably. The following list contains some useful suggestions for PCB layout design of the MIC2042/43 in order to prevent the die from overheating under normal operating conditions:

1. Supply additional copper area under the device to remove heat away from the IC.

   See “Application Hint 17” for a general guideline in calculating the suggested area.

2. Provide additional pad area on the corner pins of the MIC2042/43 IC for heat distribution.

3. Tie the common power pins (VIN = pins 8 and 12 and VOUT = pins 10, 11, 14 for the 14-pin TSSOP, VIN = pins 5 and 7 and VOUT = pins 6 and 8 for the 8-pin SOP) together in a manner such that the traces entering and leaving the device have a uniform width sufficient for the application’s current requirements plus added margin (25% minimum recommended).

   Ex: For 2A maximum current, design traces for 2.5A capability.

4. For PCB trace width calculation, there are numerous calculator programs available on the internet and elsewhere. As a general rule of thumb, 15-20 mils for every 1A of current when using 1oz. copper. However, the trace width calculators often take into account maximum temperature increase constraints, as well as layer arrangement, in determining the PCB trace widths.

Package Information

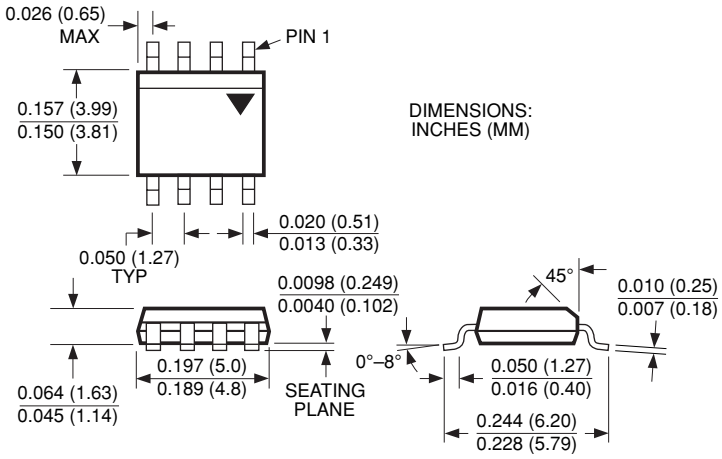

8-Pin SOP (M)

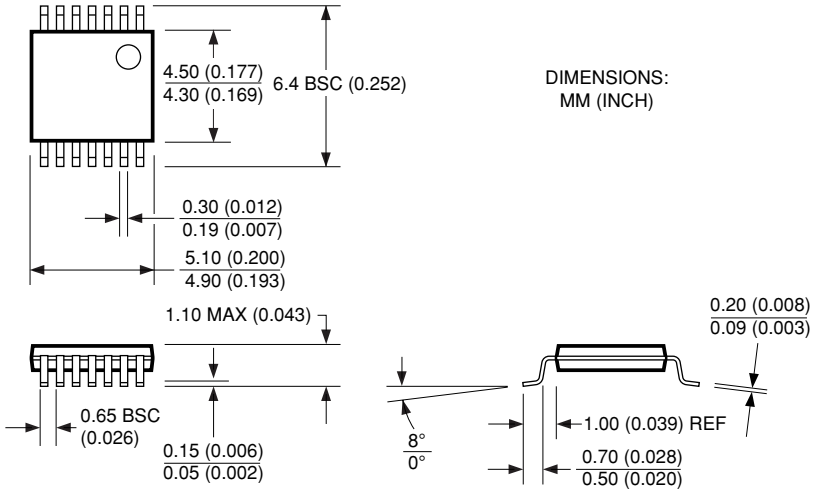

14-Pin TSSOP (TS)

MICREL, INC. 1849 FORTUNE DRIVE SAN JOSE, CA 95131 USA

TEL + 1 (408) 944-0800 FAX + 1 (408) 944-0970 WEB http://www.micrel.com

The information furnished by Micrel in this data sheet is believed to be accurate and reliable. However, no responsibility is assumed by Micrel for its use. Micrel reserves the right to change circuitry and specifications at any time without notification to the customer.

Micrel Products are not designed or authorized for use as components in life support appliances, devices or systems where malfunction of a product can reasonably be expected to result in personal injury. Life support devices or systems are devices or systems that (a) are intended for surgical implant into the body or (b) support or sustain life, and whose failure to perform can be reasonably expected to result in a significant injury to the user. A Purchaser's use or sale of Micrel Products for use in life support appliances, devices or systems is at Purchaser's own risk and Purchaser agrees to fully indemnify Micrel for any damages resulting from such use or sale.

© 2005 Micrel, Incorporated.