PART NUMBER	SML-LX2832IC-TR	REV	F

REV	E.C.N NUMBER AND REVISION COMMENTS	DATE
A	E.C.N. #10801.	03.14.03
B	E.C.N. #10967.	02.08.05
C	E.C.N. #11148.	10.16.07
D	E.C.N. #11450.	04.11.12
E	E.C.N. #11627.	11.12.12
F	ECN-Lumex202100067	12.10.21

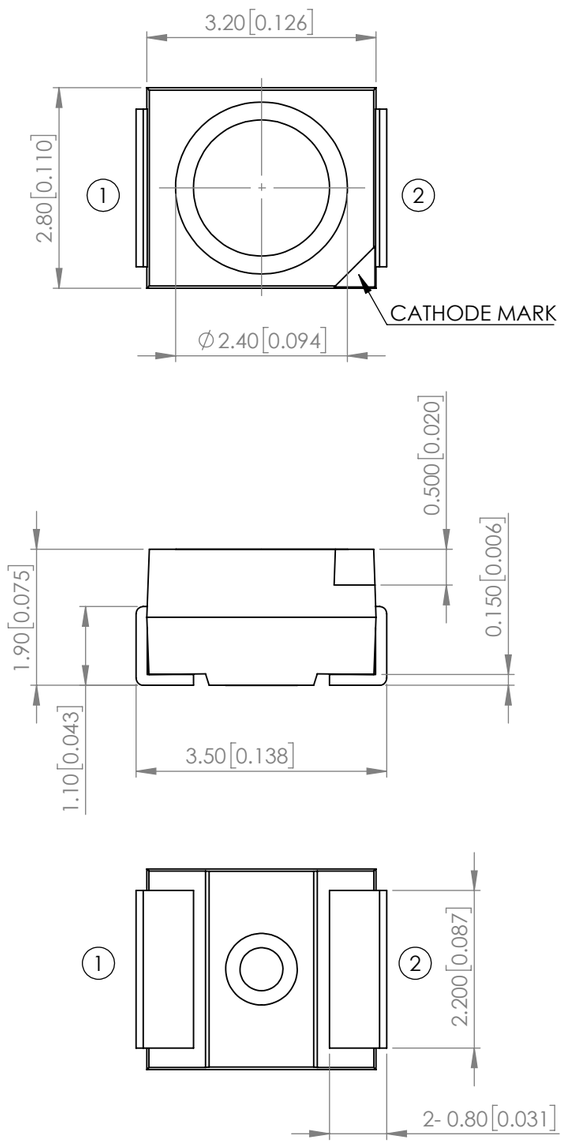

POLARITY

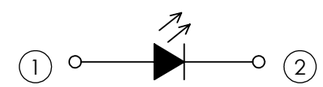

RECOMMENDED SOLDER PAD LAYOUT

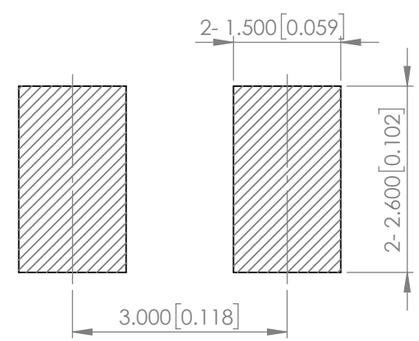

ELECTRO-OPTICAL CHARACTERISTIC TA=25℃

PARAMETER	MIN	TYP	MAX	UNITS	TEST COND
PEAK WAVELENGTH	-	632	-	nm	If=20mA
FORWARD VOLTAGE	-	2.0	2.4	Vf	If=20mA
REVERSE CURRENT	-	-	10	uA	VR=5V
LUMINOUS INTENSITY	-	55	-	mcd	If=20mA
VIEWING ANGLE	-	120	-	2x theta1/2	-
EMITTED COLOR	RED				
EPOXY LENS FINISH	WATER CLEAR				

ABSOLUTE MAXIMUM RATINGS TA=25℃

PARAMETER	MAX	UNITS
PEAK FORWARD CURRENT*	60	mA
FORWARD CURRENT	25	mA
REVERSE VOLTAGE	5	V
POWER DISSIPATION	60	mW
STORAGE TEMPERATURE	-40 TO +100	℃
OPERATING TEMPERATURE	-40 TO +85	℃

*** 1/10 DUTY CYCLE 0.1ms PULSE.**

MOISTURE SENSITIVE DEVICE
PER JEDEC LEVEL 3 STANDARDS

*UNLESS OTHERWISE SPECIFIED TOLERANCES PER DECIMAL PRECISION ARE: X=±1 (±0.039), X.X=±0.5 (±0.020), X.XX=±0.25 (±0.010), X.XXX=±0.127 (±0.005). LEAD SIZE=±0.05 (±0.002), LEAD LENGTH=±0.75 (±0.030). MIN= +DECIMAL PRECISION -0.00 MAX.= +0.00 -DECIMAL PRECISION

LUMEX® Creating LED and LCD Solutions Together
425 N. GARY AVE.
CAROL STREAM, IL 60188
PHONE : 800-278-5666
FAX : 630-315-2150
WEB : WWW.LUMEX.COM

3.2(L)*2.8(W)*1.9(H)mm, SURFACE MOUNT TOP VIEW LED, 632nm RED, WATER CLEAR LENS, TAPE & REEL.

****THE SPECIFICATIONS MAY CHANGE AT ANY TIME WITHOUT NOTICE.****

CONFIDENTIAL INFORMATION
THE INFORMATION CONTAINED IN THIS DOCUMENT IS THE PROPERTY OF LUMEX INC. EXCEPT AS SPECIFICALLY AUTHORIZED IN WRITING BY LUMEX INC., THE HOLDER OF THIS DOCUMENT SHALL KEEP ALL INFORMATION CONTAINED HEREIN CONFIDENTIAL AND SHALL PROTECT SAME IN WHOLE OR IN PART FROM DISCLOSURE AND DISSEMINATION TO ALL THIRD PARTIES.

DATE : 2017.12.28	DRAWN BY : C.C.
PAGE : 1 OF 2	CHKD BY : E.C.
SCALE : NTF	APRVD BY : G.Y.
UNIT : mm [INCH]	Pb

PART NUMBER	SML-LX2832IC-TR	REV	F

PROFILE

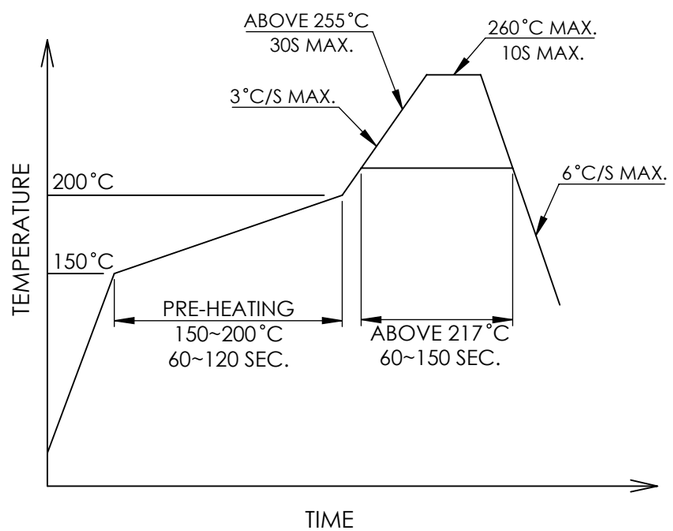

CARRIER TAPE DIMENSION

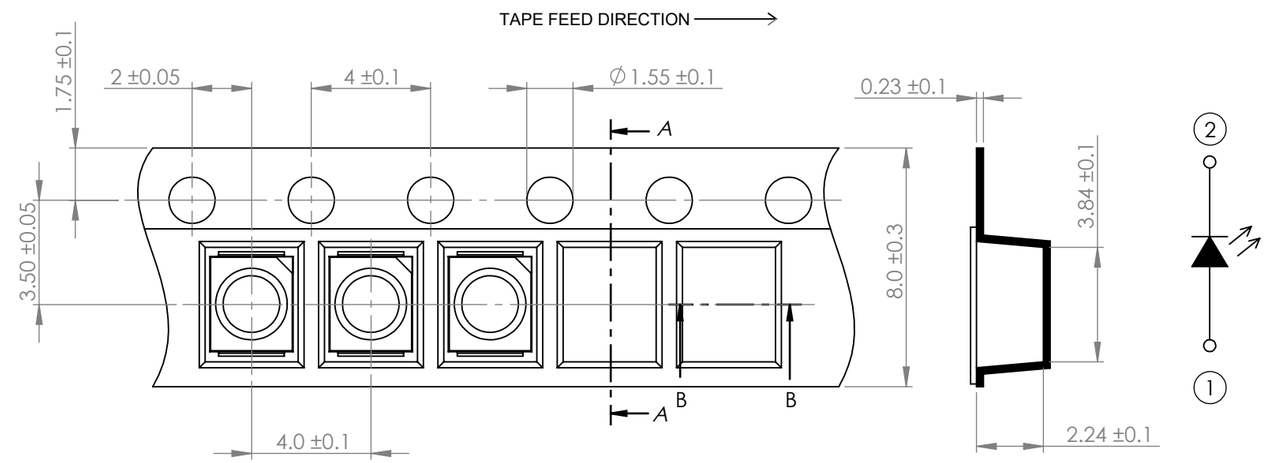

SECTION A-A

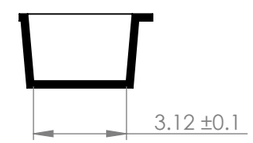

SECTION B-B

NOTE:
1. PACKAGE: 2000 PCS/REEL.

*UNLESS OTHERWISE SPECIFIED TOLERANCES PER DECIMAL PRECISION ARE: X=±1 (±0.039), X.X=±0.5 (±0.020), X.XX=±0.25 (±0.010), X.XXX=±0.127 (±0.005). LEAD SIZE=±0.05 (±0.002), LEAD LENGTH=±0.75 (±0.030). MIN= +DECIMAL PRECISION -0.00 MAX.= +0.00 -DECIMAL PRECISION

LUMEX Creating LED and LCD Solutions Together
425 N. GARY AVE.
CAROL STREAM, IL 60188
PHONE : 800-278-5666
FAX : 630-315-2150
WEB : WWW.LUMEX.COM

3.2(L)*2.8(W)*1.9(H)mm, SURFACE MOUNT TOP VIEW LED, 632nm RED, WATER CLEAR LENS, TAPE & REEL.

****THE SPECIFICATIONS MAY CHANGE AT ANY TIME WITHOUT NOTICE.****

CONFIDENTIAL INFORMATION
THE INFORMATION CONTAINED IN THIS DOCUMENT IS THE PROPERTY OF LUMEX INC. EXCEPT AS SPECIFICALLY AUTHORIZED IN WRITING BY LUMEX INC., THE HOLDER OF THIS DOCUMENT SHALL KEEP ALL INFORMATION CONTAINED HEREIN CONFIDENTIAL AND SHALL PROTECT SAME IN WHOLE OR IN PART FROM DISCLOSURE AND DISSEMINATION TO ALL THIRD PARTIES.

DATE : 2017.12.28	DRAWN BY : C.C.
PAGE : 2 OF 2	CHKD BY : E.C.
SCALE : NTF	APRVD BY : G.Y.
UNIT : mm [INCH]	Pb