LMBR220FT1G

Schottky Barrier Diode

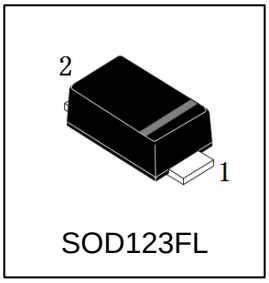

SOD123FL

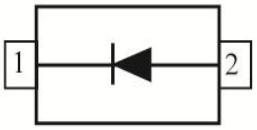

1. FEATURES

- Low power losses, high efficiency.
- Guardring for over voltage protection.
- For use in low voltage high frequency inverters, free wheeling,and polarity protection applications
- We declare that the material of product compliance with RoHS requirements and Halogen Free.

2. DEVICE MARKING AND ORDERING INFORMATION

Device	Marking	Shipping
LMBR220FT1G	22	3000/Tape&Reel

3. MAXIMUM RATINGS(Ta = 25ºC)

Parameter	Symbol	Limits	Unit
Maximum repetitive peak reverse voltage	VRRM	20	V
Maximum RMS voltage	VRMS	14	V
Maximum DC blocking voltage	VDC	20	V
Maximum average forward rectified current at TC = 75°C	IF(AV)	2	A
Peak forward surge current 8.3ms single half sine-wave superimposed on rated load (JEDEC Method)	IFSM	50	A
Power Dissipation	PD	400	mW
Typical thermal resistance (Note 1)	RθJA	170	℃/W
	RθJL	40	
Operating junction temperature range	Tj	–55 ~ +150	℃
Storage temperature range	Tstg	–55 ~ +150	℃

4. ELECTRICAL CHARACTERISTICS (Ta= 25ºC)

Characteristic	Symbol	Min.	Typ.	Max.	Unit
Maximum instantaneous forward voltage at 2.0A	VF	-	-	0.5	V
Maximum DC reverse current at rated DC blocking voltage TA = 25℃	IR	-	-	0.5	mA
Tj = 100 ℃		-	-	20	
Typical junction capacitance at 4.0V, 1MHz	CJ	-	160	-	pF

5.ELECTRICAL CHARACTERISTICS CURVES

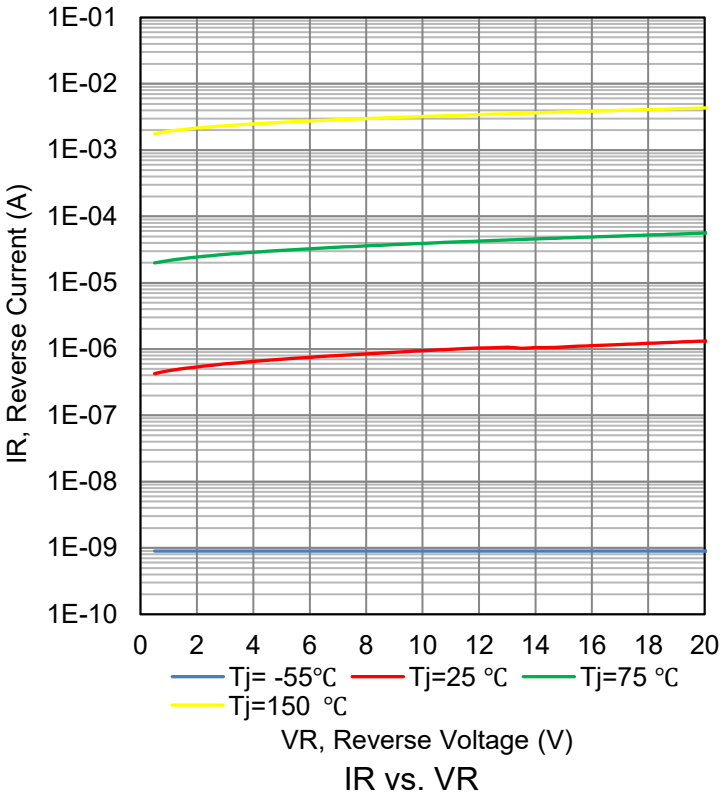

IR vs. VR

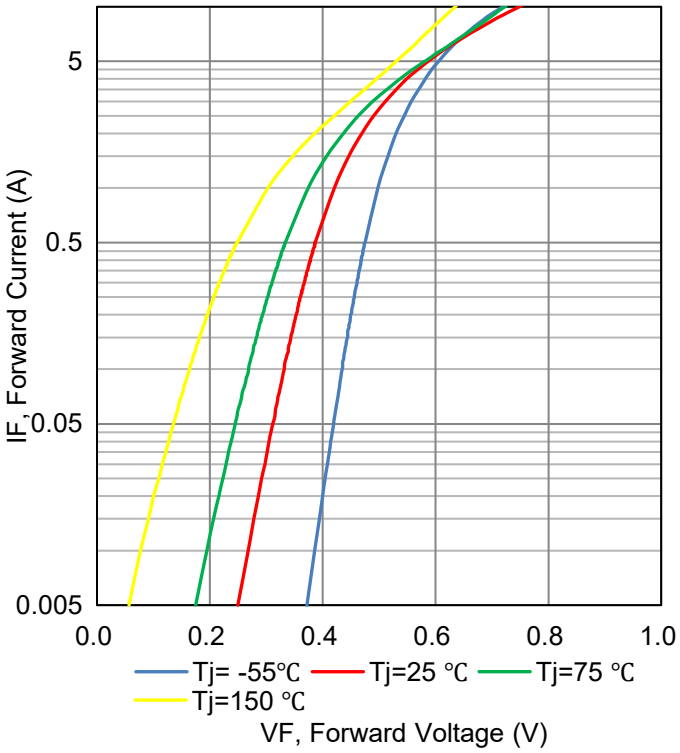

IF vs. VF

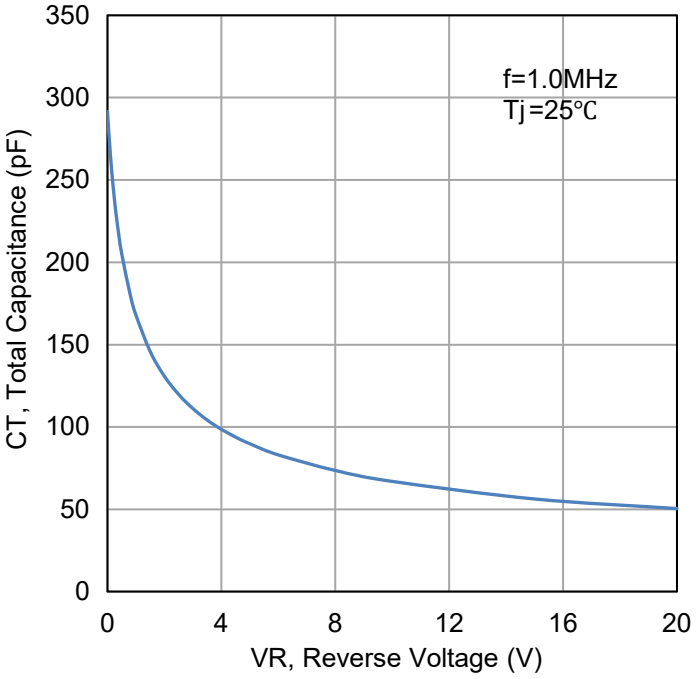

CT vs. VR

6.OUTLINE AND DIMENSIONS

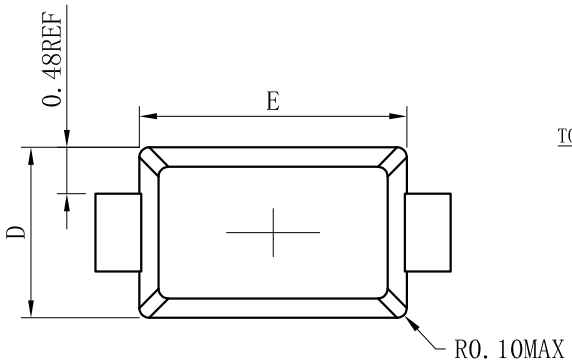

TOP VIEW

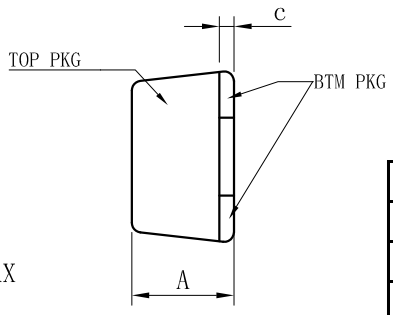

SIDE VIEW

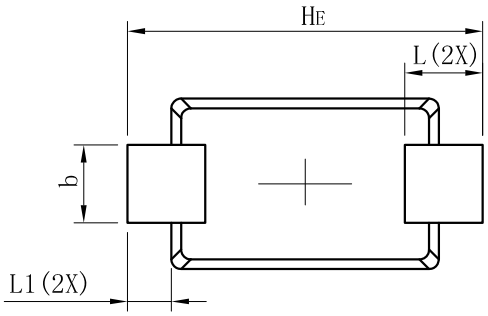

BOTTOM VIEW

SOD123FL			
DIM	MIN	NOR	MAX
A	0.90	1.05	1.15
b	0.75	0.80	0.95
L	0.50	0.80	1.10
E	2.60	2.75	2.90
D	1.60	1.75	1.90
HE	3.50	3.65	3.80
c	0.12	0.17	0.22
L1	0.25	0.45	0.65
All Dimensions in mm			

GENERAL NOTES

1. Top package surface finish Ra0.4±0.2um
2. Bottom package surface finish Ra0.7±0.2um
3. Side package surface finish Ra0.4±0.2um

7.SOLDERING FOOTPRINT

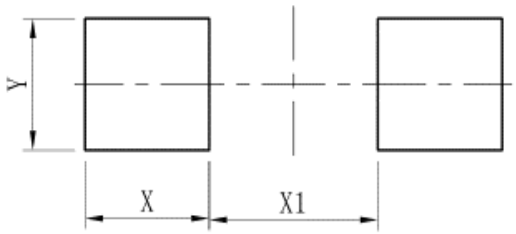

DIM	(mm)
X	1.20
Y	1.10
X1	2.00

DISCLAIMER

- Curve guarantee in the specification. The curve of test items with electric parameter is used as quality guarantee. The curve of test items without electric parameter is used as reference only.

- Before you use our Products for new Project, you are requested to carefully read this document and fully under--stand its contents. LRC shall not be in any way responsible or liable for failure, malfunction or accident arising from the use of any LRC’s Products against warning, caution or note contained in this document.

- All information contained in this document is current as of the issuing date and subject to change without any prior notice. Before purchasing or using LRC's Products,please confirm the latest information with a LRC sales represe--ntative.