LBZX84C6V8LT1G

Zener Voltage Regulator Diodes

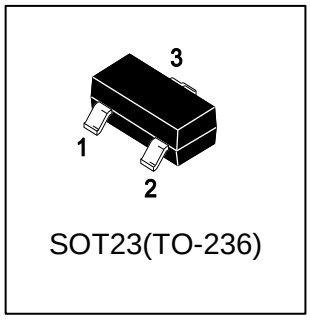

SOT23(TO-236)

1. FEATURES

- We declare that the material of product compliance with RoHS requirements and Halogen Free.

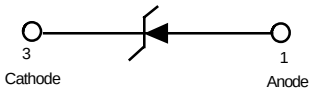

2. DEVICE MARKING AND ORDERING INFORMATION

Device	Marking	Shipping
LBZX84C6V8LT1G	Z5	3000/Tape&Reel
LBZX84C6V8LT3G	Z5	13000/Tape&Reel

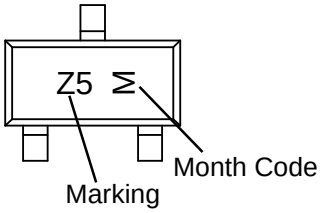

3. THERMAL CHARACTERISTICS

Parameter	Symbol	Limits	Unit
Total Device Dissipation, FR−4 Board (Note 1) @ TA = 25ºC	PD	300	mW
Thermal Resistance Junction–to–Ambient	RΘJA	435	ºC/W
Thermal Resistance Junction–to–Case	RΘJC	190	ºC/W
Junction temperature	TJ	−55～+150	°C
Storage temperature	Tstg	−55～+150	°C

1.Device mounted on an FR-4 PCB, single-sided copper, tin-plated and standard

4. ELECTRICAL CHARACTERISTICS (Ta= 25°C)

Characteristic	Symbol	Min.	Typ.	Max.	Unit
Zener Voltage(Note 2) (IZT1 = 5 mA) (IZT2 = 1 mA) (IZT3 = 20 mA)	VZ	 6.4 6.3 6.4	 6.8 - -	 7.2 7.2 7.4	V
Zener Impedance (IZT1 = 5 mA) (IZT2 = 1 mA) (IZT3 = 20 mA)	ZZT	 - - -	 - - -	 15 80 6	Ω
Reverse Leakage Current (VR=4V)	IR	-	-	2	μA
Forward Voltage (IF=10mA)	VF	-	-	0.9	V
Capacitance (VR=0,f=1MHz)	C	-	-	155	pF
Temperature Coefficient (IZT1 = 5mA)	θVZ	1.2	-	4.5	mV/k

2.Zener voltage is measured with a pulse test current IZ at an ambient temperature of 25°C.

5.ELECTRICAL CHARACTERISTICS CURVES

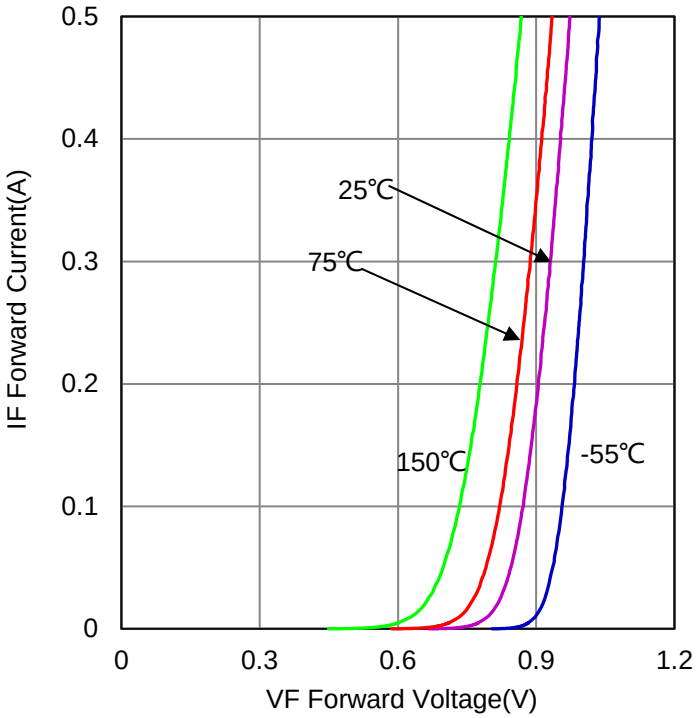

IF vs. VF

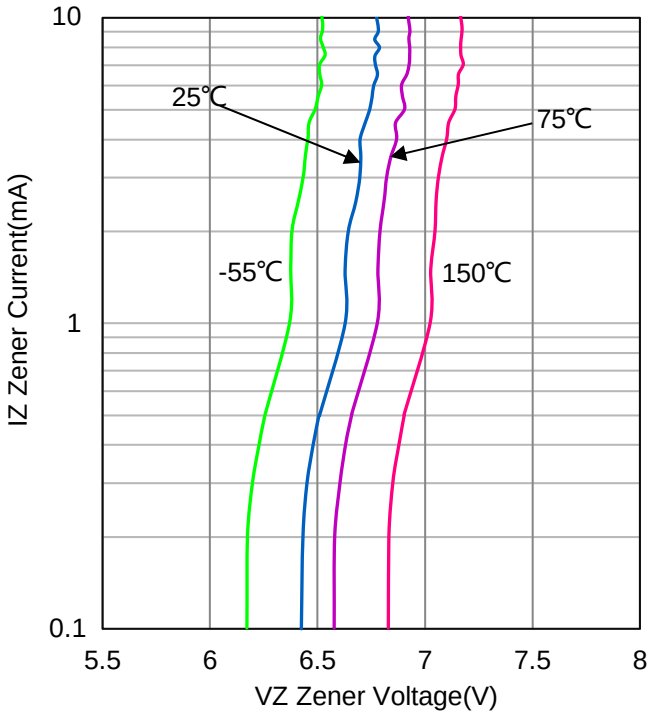

IZ vs. VZ

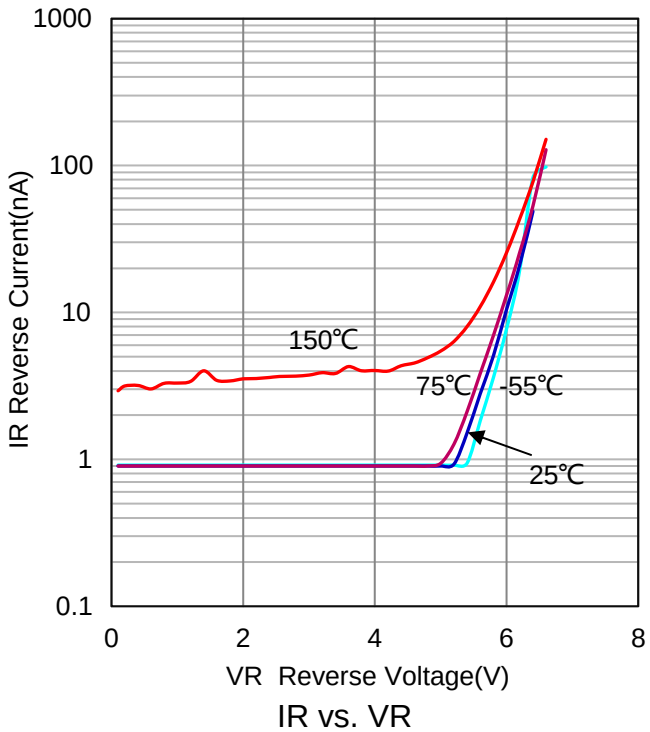

IR vs. VR

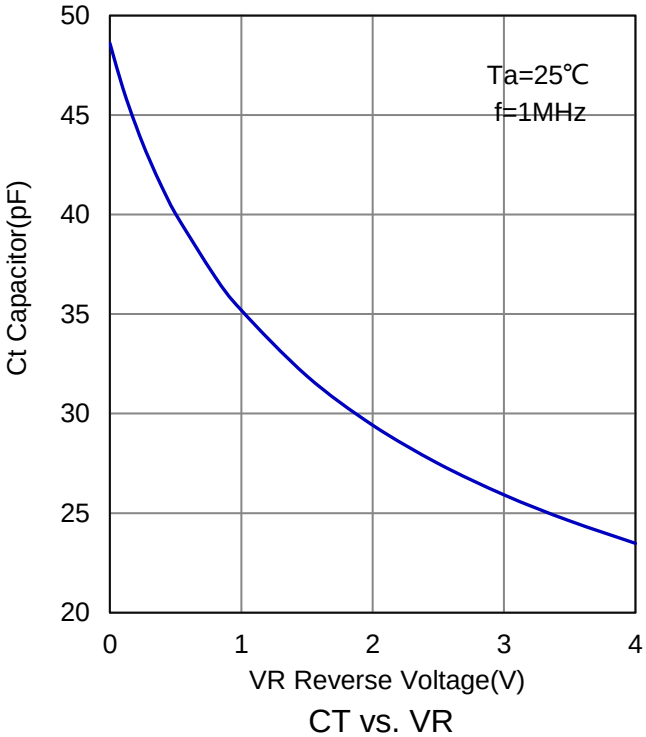

CT vs. VR

6.OUTLINE AND DIMENSIONS

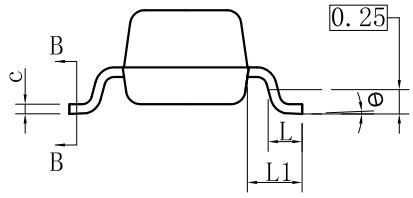

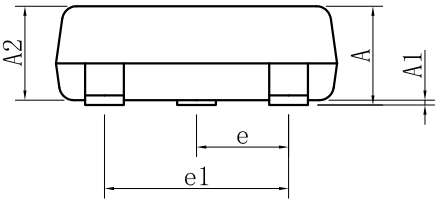

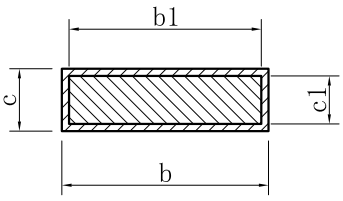

SECTION B-B

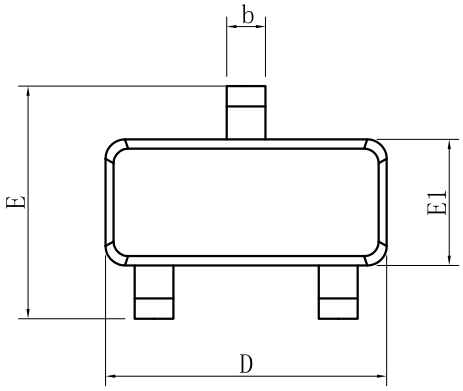

SOT23			
DIM	MIN	NOR	MAX
A	0.89	-	1.12
A1	0.01	-	0.10
A2	0.88	0.95	1.02
b	0.30	-	0.50
b1	0.30	0.40	0.45
c	0.08	-	0.20
c1	0.08	0.10	0.16
D	2.80	2.90	3.04
E	2.10	-	2.64
E1	1.20	1.30	1.40
e	0.95BSC		
e1	1.90BSC		
L	0.40	0.46	0.60
L1	0.54REF		
θ	0°	-	8°
All Dimensions in mm			

GENERAL NOTES

1. Top package surface finish Ra0.4±0.2um
2. Bottom package surface finish Ra0.7±0.2um
3. Side package surface finish Ra0.4±0.2um

7.SOLDERING FOOTPRINT

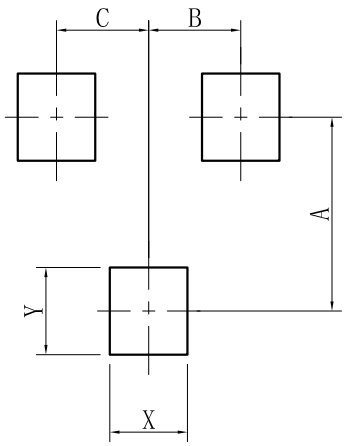

SOT-23	
DIM	(mm)
X	0.80
Y	0.90
A	2.00
B	0.95
C	0.95

DISCLAIMER

- Curve guarantee in the specification. The curve of test items with electric parameter is used as quality guarantee. The curve of test items without electric parameter is used as reference only.

- Before you use our Products for new Project, you are requested to carefully read this document and fully under--stand its contents. LRC shall not be in any way responsible or liable for failure, malfunction or accident arising from the use of any LRC’s Products against warning, caution or note contained in this document.

- All information contained in this document is current as of the issuing date and subject to change without any prior notice. Before purchasing or using LRC's Products,please confirm the latest information with a LRC sales represe--ntative.