F872 Series Metallized Polypropylene Film, Class X1, 480 VAC

Overview

The F872 Series is constructed of metallized polypropylene film encapsulated with self-extinguishing resin in a box of material meeting the requirements of UL 94 V–0.

Applications

For worldwide use as electromagnetic interference (EMI) suppression filter in across-the-line applications requiring X1 safety classification.

Benefits

- Approvals: ENEC, UL, cUL, CQC
- Rated voltage: 480 VAC 50/60 Hz
- Capacitance range: 0.001 – 5.6 µF
- Lead spacing: 10 – 37.5 mm
- Capacitance tolerance: ±20%, ±10%, ±5% on request
- Climatic category: 40/110/56, IEC 60068–1
- Tape and reel in accordance with IEC 60286–2
- RoHS Compliant and lead-free terminations
- Operating temperature range of -40˚C to +110˚C
- 100% screening factory test at 3,000 VDC

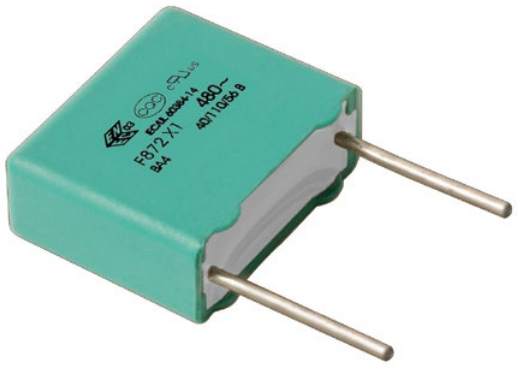

Part Number System

F	872	B	S	104	M	480	C
Capacitor Class	Series	Lead Spacing (mm)	Size Code	Capacitance Code (pF)	Capacitance Tolerance	Voltage (VAC)	Lead and Packaging Code
F = Film	X1, Metallized Polypropylene	A = 10 B = 15 D = 22.5 F = 27.5 R = 37.5	See Dimension Table	First two digits represent significant figures. Third digit specifies number of zeros.	J = ±5% K = ±10% M = ±20%	480	See Ordering Options Table

© KEMET Electronics Corporation • P.O. Box 5928 • Greenville, SC 29606 (864) 963-6300 • www.kemet.com

Ordering Options Table

Lead Spacing Nominal (mm)	Type of Leads and Packaging	Lead Length (mm)	Lead and Packaging Code
10	**Standard Lead and Packaging Options**		
	Bulk (Bag) – Short Leads	4 +2/-0	C
	Bulk (Bag) – Long Leads	17 +0/-1	A
	Tape & Reel (Standard Reel)	H_0= 18.5 +/-0.5	L
	Other Lead and Packaging Options		
	Bulk (Bag) – Max Length Leads	20 +5/-0	ALL0L
	Ammo Pack	H_0= 18.5 +/-0.5	R
	Tape & Reel (Large Reel)	H_0= 18.5 +/-0.5	P
15	**Standard Lead and Packaging Options**		
	Bulk (Bag) – Short Leads	4 +2/-0	C
	Bulk (Bag) – Long Leads	17 +0/-1	A
	Tape & Reel (Standard Reel)	H_0= 18.5 +/-0.5	L
	Pizza Pack	4 +2/-0	Z
	Other Lead and Packaging Options		
	Bulk (Bag) – Max Length Leads	25 +5/-0	ALR0L
	Ammo Pack	H_0= 18.5 +/-0.5	R
	Tape & Reel (Large Reel)	H_0= 18.5 +/-0.5	P
22.5	**Standard Lead and Packaging Options**		
	Pizza – Long Leads	17 +0/-1	ZLH0J
	Pizza Pack	4 +2/-0	Z
	Other Lead and Packaging Options		
	Tape & Reel (Standard Reel)	H_0= 18.5 +/-0.5	L
	Tape & Reel (Large Reel)	H_0= 18.5 +/-0.5	P
	Ammo Pack	H_0= 18.5 +/-0.5	R
27.5	**Standard Lead and Packaging Options**		
	Pizza – Long Leads	17 +0/-1	ZLH0J
	Pizza Pack	4 +2/-0	Z
37.5	**Standard Lead and Packaging Options**		
	Pizza – Long Leads	17 +0/-1	ZLH0J
	Pizza Pack	4 +2/-0	Z

Dimensions – Millimeters

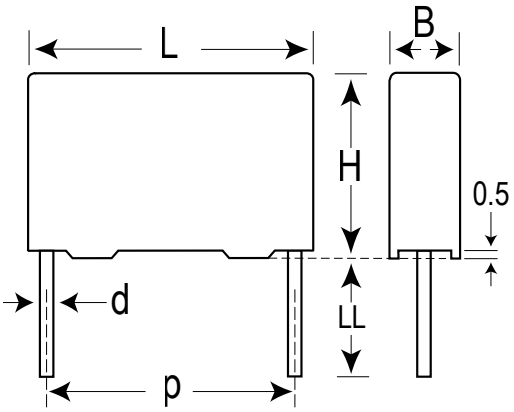

Size Code	Version	p		B		H		L		d	
		Nominal	Tolerance	Nominal	Tolerance	Nominal	Tolerance	Nominal	Tolerance	Nominal	Tolerance
AG		10.0	+/-0.4	4.0	Maximum	9.0	Maximum	13.0	Maximum	0.6	+/-0.05
AK		10.0	+/-0.4	5.0	Maximum	11.0	Maximum	13.0	Maximum	0.6	+/-0.05
AP		10.0	+/-0.4	6.0	Maximum	12.0	Maximum	13.0	Maximum	0.6	+/-0.05
AO		10.0	+/-0.4	7.0	Maximum	17.0	Maximum	13.0	Maximum	0.6	+/-0.05
AL	Low Profile	10.0	+/-0.4	9.5	Maximum	7.5	Maximum	13.0	Maximum	0.6	+/-0.05
AE	Special Version	10.0	+/-0.4	4.0	Maximum	8.0	Maximum	13.0	Maximum	0.6	+/-0.05
BB		15.0	+/-0.4	4.0	Maximum	10.0	Maximum	18.0	Maximum	0.8	+/-0.05
BC		15.0	+/-0.4	5.0	Maximum	11.0	Maximum	18.0	Maximum	0.8	+/-0.05
BE		15.0	+/-0.4	5.5	Maximum	12.5	Maximum	18.0	Maximum	0.8	+/-0.05
BG		15.0	+/-0.4	6.0	Maximum	12.0	Maximum	18.0	Maximum	0.8	+/-0.05
BI	High Profile	15.0	+/-0.4	6.0	Maximum	17.5	Maximum	18.0	Maximum	0.8	+/-0.05
BK		15.0	+/-0.4	7.5	Maximum	13.5	Maximum	18.0	Maximum	0.8	+/-0.05
BO	High Profile	15.0	+/-0.4	7.5	Maximum	18.5	Maximum	18.0	Maximum	0.8	+/-0.05
BP		15.0	+/-0.4	8.5	Maximum	14.5	Maximum	18.0	Maximum	0.8	+/-0.05
BT		15.0	+/-0.4	9.0	Maximum	12.5	Maximum	18.0	Maximum	0.8	+/-0.05
BS		15.0	+/-0.4	10.0	Maximum	16.0	Maximum	18.0	Maximum	0.8	+/-0.05
BY		15.0	+/-0.4	11.0	Maximum	19.0	Maximum	18.0	Maximum	0.8	+/-0.05
BZ	Special Version	15.0	+/-0.4	12.0	Maximum	20.0	Maximum	18.0	Maximum	0.8	+/-0.05
BR	Low Profile	15.0	+/-0.4	13.0	Maximum	12.0	Maximum	18.0	Maximum	0.8	+/-0.05
DB		22.5	+/-0.4	6.0	Maximum	14.5	Maximum	26.0	Maximum	0.8	+/-0.05
DI		22.5	+/-0.4	7.0	Maximum	16.0	Maximum	26.0	Maximum	0.8	+/-0.05
DH		22.5	+/-0.4	8.0	Maximum	16.0	Maximum	26.0	Maximum	0.8	+/-0.05
DJ		22.5	+/-0.4	8.5	Maximum	17.0	Maximum	26.0	Maximum	0.8	+/-0.05
DM		22.5	+/-0.4	9.0	Maximum	18.5	Maximum	26.0	Maximum	0.8	+/-0.05
DO		22.5	+/-0.4	10.0	Maximum	18.5	Maximum	26.0	Maximum	0.8	+/-0.05
DP		22.5	+/-0.4	11.0	Maximum	20.0	Maximum	26.0	Maximum	0.8	+/-0.05
DU		22.5	+/-0.4	13.0	Maximum	22.0	Maximum	26.0	Maximum	0.8	+/-0.05
DY		22.5	+/-0.4	15.5	Maximum	24.5	Maximum	26.0	Maximum	0.8	+/-0.05
FB		27.5	+/-0.4	9.0	Maximum	17.0	Maximum	31.5	Maximum	0.8	+/-0.05
FC		27.5	+/-0.4	11.0	Maximum	20.0	Maximum	31.5	Maximum	0.8	+/-0.05

Note: See Ordering Options Table for lead length (LL) options.

Dimensions – Millimeters cont'd

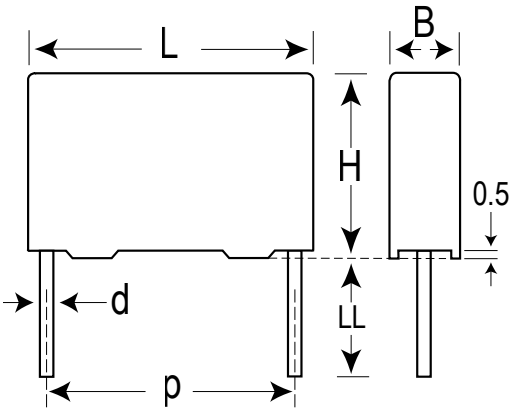

Size Code	Version	p		B		H		L		d	
		Nominal	Tolerance	Nominal	Tolerance	Nominal	Tolerance	Nominal	Tolerance	Nominal	Tolerance
FI		27.5	+/-0.4	13.0	Maximum	25.0	Maximum	31.5	Maximum	0.8	+/-0.05
FN		27.5	+/-0.4	14.0	Maximum	28.0	Maximum	31.5	Maximum	0.8	+/-0.05
FO	High Profile	27.5	+/-0.4	17.0	Maximum	40.0	Maximum	31.5	Maximum	0.8	+/-0.05
FR		27.5	+/-0.4	17.5	Maximum	28.0	Maximum	31.5	Maximum	0.8	+/-0.05
FS		27.5	+/-0.4	19.0	Maximum	29.0	Maximum	31.5	Maximum	0.8	+/-0.05
FY		27.5	+/-0.4	22.0	Maximum	37.0	Maximum	31.5	Maximum	0.8	+/-0.05
FH	Low Profile	27.5	+/-0.4	21.0	Maximum	12.5	Maximum	31.5	Maximum	0.8	+/-0.05
FQ	Low Profile	27.5	+/-0.4	27.5	Maximum	16.0	Maximum	31.5	Maximum	0.8	+/-0.05
FT	Low Profile	27.5	+/-0.4	31.0	Maximum	19.0	Maximum	31.5	Maximum	0.8	+/-0.05
RB		37.5	+/-0.4	11.0	Maximum	22.0	Maximum	41.0	Maximum	1	+/-0.05
RF		37.5	+/-0.4	13.0	Maximum	24.0	Maximum	41.0	Maximum	1	+/-0.05
RH		37.5	+/-0.4	15.0	Maximum	26.0	Maximum	41.0	Maximum	1	+/-0.05
RC		37.5	+/-0.4	16.0	Maximum	28.5	Maximum	41.0	Maximum	1	+/-0.05
RD		37.5	+/-0.4	19.0	Maximum	32.0	Maximum	41.0	Maximum	1	+/-0.05
RP		37.5	+/-0.4	21.0	Maximum	38.0	Maximum	41.0	Maximum	1	+/-0.05
RO		37.5	+/-0.4	24.0	Maximum	44.0	Maximum	41.0	Maximum	1	+/-0.05
RU		37.5	+/-0.4	30.0	Maximum	45.0	Maximum	41.0	Maximum	1	+/-0.05
RV	Low Profile	37.5	+/-0.4	24.0	Maximum	15.0	Maximum	41.0	Maximum	1	+/-0.05
RW	Low Profile	37.5	+/-0.4	24.0	Maximum	19.0	Maximum	41.0	Maximum	1	+/-0.05

Note: See Ordering Options Table for lead length (LL) options.

Performance Characteristics

Rated Voltage	480 VAC 50/60 Hz		
Capacitance Range	0.001 – 5.6 µF		
Capacitance Tolerance	±20%, ±10%, ±5% on request		
Temperature Range	-40°C to +110°C		
Climatic Category	40/110/56		
Approvals	ENEC, UL, cUL, CQC		
Dissipation Factor	Maximum Values at +23°C		
		C ≤ 0.1 µF	C > 0.1 µF
	1 kHz	0.3%	0.2%
Test Voltage Between Terminals	The 100% screening factory test is carried out at 2,500 VDC. The voltage level is selected to meet the requirements in applicable equipment standards. All electrical characteristics are checked after the test. It is not permitted to repeat this test as there is a risk to damage the capacitor. KEMET is not liable in such case for any failures.		
Insulation Resistance	Minimum Values Between Terminals		
	C ≤ 0.33 µF	≥ 30,000 MΩ	
	C > 0.33 µF	≥ 10,000 MΩ • µF	
In DC Applications	Recommended voltage ≤ 1,000 VDC		

Impedance Graph

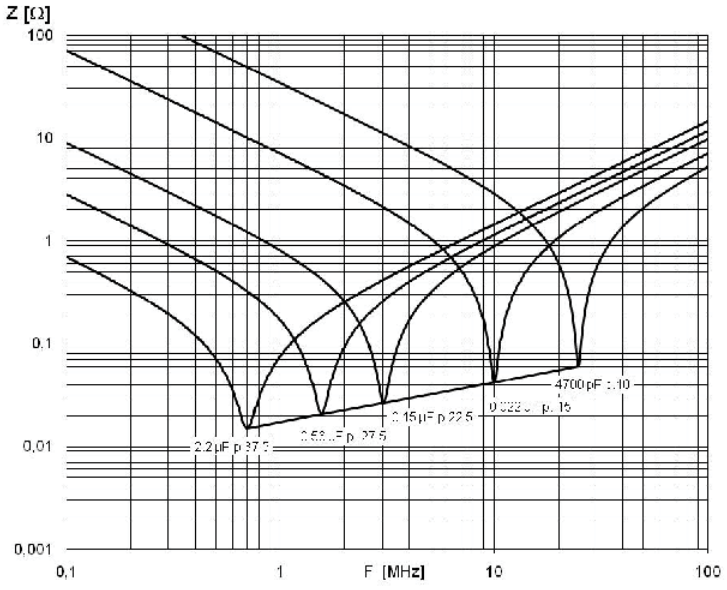

Environmental Test Data

Test	IEC Publication	Procedure
Endurance	IEC 60384–14	1.25 x V_R VAC 50 Hz, once every hour increase to 1,000 VAC for 0.1 second, 1,000 hours at upper rated temperature
Vibration	IEC 60068–2–6 Test Fc	3 directions at 2 hours each 10 – 55 Hz at 0.75 mm or 98 m/s^2
Bump	IEC 60068–2–29 Test Eb	1,000 bumps at 390 m/s^2
Change of Temperature	IEC 60068–2–14 Test Na	Upper and lower rated temperature 5 cycles
Active Flammability	IEC 60384–14	V_R + 20 surge pulses at 4 kV (pulse every 5 seconds)
Passive Flammability	IEC 60384–14	IEC 60384–1, IEC 60695–11–5 Needle-flame test
Damp Heat Steady State	IEC 60068–2–78 Test Cab	+40°C and 93% RH, 56 days

Approvals

Mark	Specification	File Number
	EN/IEC 60384–14	CA08.00187
	UL 60384–14 and CAN/CSA–E60384–14	E97797
	IEC 60384–14	CQC12001084716 CQC12001084708 CQC12001084711 CQC12001084714 CQC12001084713 CQC12001084715 CQC12001088081

Environmental Compliance

All new KEMET EMI capacitors are RoHS Compliant and Halogen Free.

RoHS Compliant

Halogen Free

Table 1 – Ratings & Part Number Reference

Capacitance Value (µF)	Size Code	Maximum Dimensions in mm			Lead Spacing (p)	dV/dt (V/µs)	Part Number
		B	H	L			
0.001	AE	4	8	13	10	750	F872AE102(1)480(2)
0.0012	AE	4	8	13	10	750	F872AE122(1)480(2)
0.0015	AE	4	8	13	10	750	F872AE152(1)480(2)
0.0018	AE	4	8	13	10	750	F872AE182(1)480(2)
0.0018	AL	9.5	7.5	13	10	750	F872AL182(1)480(2)
0.0022	AE	4	8	13	10	750	F872AE222(1)480(2)
0.0022	AL	9.5	7.5	13	10	750	F872AL222(1)480(2)
0.0025	AE	4	8	13	10	750	F872AE252(1)480(2)
0.0025	AL	9.5	7.5	13	10	750	F872AL252(1)480(2)
0.0027	AE	4	8	13	10	750	F872AE272(1)480(2)
0.0027	AL	9.5	7.5	13	10	750	F872AL272(1)480(2)
0.0033	AE	4	8	13	10	750	F872AE332(1)480(2)
0.0033	AL	9.5	7.5	13	10	750	F872AL332(1)480(2)
0.0039	AE	4	8	13	10	750	F872AE392(3)480(2)
0.0039	AG	4	9	13	10	750	F872AG392(1)480(2)
0.0039	AL	9.5	7.5	13	10	750	F872AL392(1)480(2)
0.0047	AG	4	9	13	10	750	F872AG472(1)480(2)
0.0047	AL	9.5	7.5	13	10	750	F872AL472(1)480(2)
0.0056	AK	5	11	13	10	750	F872AK562(1)480(2)
0.0056	AL	9.5	7.5	13	10	750	F872AL562(1)480(2)
0.0068	AK	5	11	13	10	750	F872AK682(1)480(2)
0.0068	AL	9.5	7.5	13	10	750	F872AL682(1)480(2)
0.0082	AK	5	11	13	10	750	F872AK822(3)480(2)
0.0082	AL	9.5	7.5	13	10	750	F872AL822(1)480(2)
0.01	AL	9.5	7.5	13	10	750	F872AL103(1)480(2)
0.01	AP	6	12	13	10	750	F872AP103(1)480(2)
0.012	AP	6	12	13	10	750	F872AP123(3)480(2)
0.015	AO	7	17	13	10	750	F872AO153(1)480(2)
0.018	AO	7	17	13	10	750	F872AO183(3)480(2)
0.0027	BB	4	10	18	15	600	F872BB272(1)480(2)
0.0033	BB	4	10	18	15	600	F872BB332(1)480(2)
0.0039	BB	4	10	18	15	600	F872BB392(1)480(2)
0.0047	BB	4	10	18	15	600	F872BB472(1)480(2)
0.0056	BB	4	10	18	15	600	F872BB562(1)480(2)
0.0068	BB	4	10	18	15	600	F872BB682(1)480(2)
0.0082	BB	4	10	18	15	600	F872BB822(1)480(2)
0.01	BB	4	10	18	15	600	F872BB103(1)480(2)
0.012	BB	4	10	18	15	600	F872BB123(1)480(2)
0.015	BB	4	10	18	15	600	F872BB153(1)480(2)
0.015	BT	9	12.5	18	15	600	F872BT153(1)480(2)
0.018	BC	5	11	18	15	600	F872BC183(1)480(2)
0.018	BT	9	12.5	18	15	600	F872BT183(1)480(2)
0.022	BC	5	11	18	15	600	F872BC223(1)480(2)
0.022	BT	9	12.5	18	15	600	F872BT223(1)480(2)
0.025	BE	5.5	12.5	18	15	600	F872BE253(1)480(2)
0.025	BT	9	12.5	18	15	600	F872BT253(1)480(2)
0.027	BE	5.5	12.5	18	15	600	F872BE273(1)480(2)
0.027	BT	9	12.5	18	15	600	F872BT273(1)480(2)
0.033	BE	5.5	12.5	18	15	600	F872BE333(3)480(2)
0.033	BG	6	12	18	15	600	F872BG333(1)480(2)
0.033	BT	9	12.5	18	15	600	F872BT333(1)480(2)
0.039	BI	6	17.5	18	15	600	F872BI393(3)480(2)
0.039	BK	7.5	13.5	18	15	600	F872BK393(1)480(2)
0.039	BR	13	12	18	15	600	F872BR393(1)480(2)
0.039	BT	9	12.5	18	15	600	F872BT393(1)480(2)
0.047	BI	6	17.5	18	15	600	F872BI473(1)480(2)
0.047	BK	7.5	13.5	18	15	600	F872BK473(1)480(2)
0.047	BR	13	12	18	15	600	F872BR473(1)480(2)
0.047	BT	9	12.5	18	15	600	F872BT473(1)480(2)
Capacitance Value (µF)	**Size Code**	**B (mm)**	**H (mm)**	**L (mm)**	**Lead Spacing (p)**	**dV/dt (V/µs)**	**Part Number**

(1) M = ±20%, K = ±10%, J = ± 5% on request.
(2) Insert lead and packaging code. See Ordering Options Table for available options.
(3) M = ±20% (only available tolerance).

Table 1 – Ratings & Part Number Reference cont'd

Capacitance Value (µF)	Size Code	Maximum Dimensions in mm			Lead Spacing (p)	dV/dt (V/µs)	Part Number
		B	H	L			
0.056	BI	6	17.5	18	15	600	F872BI563(3)480(2)
0.056	BK	7.5	13.5	18	15	600	F872BK563(3)480(2)
0.056	BO	7.5	18.5	18	15	600	F872BO563(1)480(2)
0.056	BP	8.5	14.5	18	15	600	F872BP563(1)480(2)
0.056	BR	13	12	18	15	600	F872BR563(1)480(2)
0.068	BO	7.5	18.5	18	15	600	F872BO683(1)480(2)
0.068	BP	8.5	14.5	18	15	600	F872BP683(3)480(2)
0.068	BR	13	12	18	15	600	F872BR683(1)480(2)
0.082	BO	7.5	18.5	18	15	600	F872BO823(3)480(2)
0.082	BR	13	12	18	15	600	F872BR823(1)480(2)
0.082	BS	10	16	18	15	600	F872BS823(1)480(2)
0.1	BS	10	16	18	15	600	F872BS104(3)480(2)
0.1	BY	11	19	18	15	600	F872BY104(1)480(2)
0.12	BY	11	19	18	15	600	F872BY124(3)480(2)
0.12	BZ	12	20	18	15	600	F872BZ124(1)480(2)
0.15	BZ	12	20	18	15	600	F872BZ154(3)480(2)
0.039	DB	6	14.5	26	22.5	300	F872DB393(1)480(2)
0.047	DB	6	14.5	26	22.5	300	F872DB473(1)480(2)
0.056	DB	6	14.5	26	22.5	300	F872DB563(1)480(2)
0.068	DB	6	14.5	26	22.5	300	F872DB683(1)480(2)
0.082	DI	7	16	26	22.5	300	F872DI823(1)480(2)
0.1	DI	7	16	26	22.5	300	F872DI104(1)480(2)
0.12	DH	8	16	26	22.5	300	F872DH124(1)480(2)
0.12	DI	7	16	26	22.5	300	F872DI124(3)480(2)
0.15	DJ	8.5	17	26	22.5	300	F872DJ154(3)480(2)
0.15	DM	9	18.5	26	22.5	300	F872DM154(1)480(2)
0.18	DM	9	18.5	26	22.5	300	F872DM184(3)480(2)
0.18	DO	10	18.5	26	22.5	300	F872DO184(1)480(2)
0.22	DO	10	18.5	26	22.5	300	F872DO224(3)480(2)
0.22	DP	11	20	26	22.5	300	F872DP224(1)480(2)
0.25	DU	13	22	26	22.5	300	F872DU254(1)480(2)
0.27	DU	13	22	26	22.5	300	F872DU274(1)480(2)
0.33	DU	13	22	26	22.5	300	F872DU334(1)480(2)
0.39	DU	13	22	26	22.5	300	F872DU394(3)480(2)
0.39	DY	15.5	24.5	26	22.5	300	F872DY394(1)480(2)
0.47	DY	15.5	24.5	26	22.5	300	F872DY474(1)480(2)
0.15	FB	9	17	31.5	27.5	225	F872FB154(1)480(2)
0.18	FB	9	17	31.5	27.5	225	F872FB184(1)480(2)
0.22	FC	11	20	31.5	27.5	225	F872FC224(1)480(2)
0.25	FC	11	20	31.5	27.5	225	F872FC254(1)480(2)
0.25	FH	21	12.5	31.5	27.5	225	F872FH254(1)480(2)
0.27	FC	11	20	31.5	27.5	225	F872FC274(1)480(2)
0.27	FH	21	12.5	31.5	27.5	225	F872FH274(1)480(2)
0.33	FC	11	20	31.5	27.5	225	F872FC334(1)480(2)
0.33	FH	21	12.5	31.5	27.5	225	F872FH334(1)480(2)
0.39	FI	13	25	31.5	27.5	225	F872FI394(1)480(2)
0.39	FH	21	12.5	31.5	27.5	225	F872FH394(3)480(2)
0.47	FI	13	25	31.5	27.5	225	F872FI474(1)480(2)
0.56	FQ	27.5	16	31.5	27.5	225	F872FQ564(1)480(2)
0.56	FN	14	28	31.5	27.5	225	F872FN564(1)480(2)
0.68	FQ	27.5	16	31.5	27.5	225	F872FQ684(3)480(2)
0.68	FR	17.5	28	31.5	27.5	225	F872FR684(1)480(2)
0.68	FT	31	19	31.5	27.5	225	F872FT684(1)480(2)
0.82	FR	17.5	28	31.5	27.5	225	F872FR824(1)480(2)
0.82	FS	19	29	31.5	27.5	225	F872FS824(1)480(2)
0.82	FT	31	19	31.5	27.5	225	F872FT824(1)480(2)
0.82	FO	17	40	31.5	27.5	225	F872FO824(1)480(2)
1	FO	17	40	31.5	27.5	225	F872FO105(1)480(2)
1	FS	19	29	31.5	27.5	225	F872FS105(3)480(2)
Capacitance Value (µF)	**Size Code**	**B (mm)**	**H (mm)**	**L (mm)**	**Lead Spacing (p)**	**dV/dt (V/µs)**	**Part Number**

(1) M = ±20%, K = ±10%, J = ± 5% on request.
(2) Insert lead and packaging code. See Ordering Options Table for available options.
(3) M = ±20% (only available tolerance).

Table 1 – Ratings & Part Number Reference cont'd

Capacitance Value (µF)	Size Code	Maximum Dimensions in mm			Lead Spacing (p)	dV/dt (V/µs)	Part Number
		B	H	L			
1	FY	22	37	31.5	27.5	225	F872FY105(1)480(2)
1	FT	31	19	31.5	27.5	225	F872FT105(1)480(2)
1.2	FO	17	40	31.5	27.5	225	F872FO125(3)480(2)
1.2	FY	22	37	31.5	27.5	225	F872FY125(1)480(2)
1.5	FY	22	37	31.5	27.5	225	F872FY155(3)480(2)
1.8	FY	22	37	31.5	27.5	225	F872FY185(3)480(2)
0.33	RB	11	22	41	37.5	150	F872RB334(1)480(2)
0.39	RB	11	22	41	37.5	150	F872RB394(1)480(2)
0.47	RB	11	22	41	37.5	150	F872RB474(1)480(2)
0.56	RB	11	22	41	37.5	150	F872RB564(1)480(2)
0.56	RV	24	15	41	37.5	150	F872RV564(1)480(2)
0.68	RF	13	24	41	37.5	150	F872RF684(1)480(2)
0.68	RV	24	15	41	37.5	150	F872RV684(1)480(2)
0.82	RH	15	26	41	37.5	150	F872RH824(1)480(2)
0.82	RW	24	19	41	37.5	150	F872RW824(1)480(2)
1	RC	16	28.5	41	37.5	150	F872RC105(1)480(2)
1	RH	15	26	41	37.5	150	F872RH105(3)480(2)
1	RW	24	19	41	37.5	150	F872RW105(1)480(2)
1.2	RD	19	32	41	37.5	150	F872RD125(1)480(2)
1.2	RC	16	28.5	41	37.5	150	F872RC125(3)480(2)
1.2	RW	24	19	41	37.5	150	F872RW125(3)480(2)
1.5	RD	19	32	41	37.5	150	F872RD155(1)480(2)
1.8	RD	19	32	41	37.5	150	F872RD185(3)480(2)
1.8	RP	21	38	41	37.5	150	F872RP185(1)480(2)
2.2	RO	24	44	41	37.5	150	F872RO225(1)480(2)
2.5	RO	24	44	41	37.5	150	F872RO255(1)480(2)
2.7	RO	24	44	41	37.5	150	F872RO275(1)480(2)
3.3	RU	30	45	41	37.5	150	F872RU335(1)480(2)
3.5	RU	30	45	41	37.5	150	F872RU355(3)480(2)
Capacitance Value (µF)	**Size Code**	**B (mm)**	**H (mm)**	**L (mm)**	**Lead Spacing (p)**	**dV/dt (V/µs)**	**Part Number**

(1) M = ±20%, K = ±10%, J = ± 5% on request.
(2) Insert lead and packaging code. See Ordering Options Table for available options.
(3) M = ±20% (only available tolerance).

Soldering Process

The implementation of the RoHS directive has resulted in the selection of SnAuCu (SAC) alloys or SnCu alloys as primary solder. This has increased the liquidus temperature from that of 183ºC for SnPb eutectic alloy to 217 – 221ºC for the new alloys. As a result, the heat stress to the components, even in wave soldering, has increased considerably due to higher pre-heat and wave temperatures. Polypropylene capacitors are especially sensitive to heat (the melting point of polypropylene is 160 – 170ºC). Wave soldering can be destructive, especially for mechanically small polypropylene capacitors (with lead spacing of 5 mm to 15 mm), and great care has to be taken during soldering. The recommended solder profiles from KEMET should be used. Please consult KEMET with any questions. In general, the wave soldering curve from IEC Publication 61760-1 Edition 2 serves as a solid guideline for successful soldering. Please see Figure 1.

Reflow soldering is not recommended for through-hole film capacitors. Exposing capacitors to a soldering profile in excess of the above the recommended limits may result to degradation or permanent damage to the capacitors.

Do not place the polypropylene capacitor through an adhesive curing oven to cure resin for surface mount components. Insert through- hole parts after the curing of surface mount parts. Consult KEMET to discuss the actual temperature profile in the oven, if through-hole components must pass through the adhesive curing process. A maximum two soldering cycles is recommended. Please allow time for the capacitor surface temperature to return to a normal temperature before the second soldering cycle.

Figure 1

Dielectric Film Material	Maximum Preheat Temperature			Maximum Peak Soldering Temperature	
	Capacitor Lead Spacing <10 mm	Capacitor Lead Spacing = 15 mm	Capacitor Lead Spacing >15 mm	Capacitor Lead Spacing <15 mm	Capacitor Lead Spacing >15 mm
Polyester	130°C	130°C	130°C	270°C	270°C
Polypropylene	100°C	110°C	130°C	260°C	270°C
Polyphenylene Sulphide	150°C	150°C	160°C	270°C	270°C

Wave Soldering Recommendations

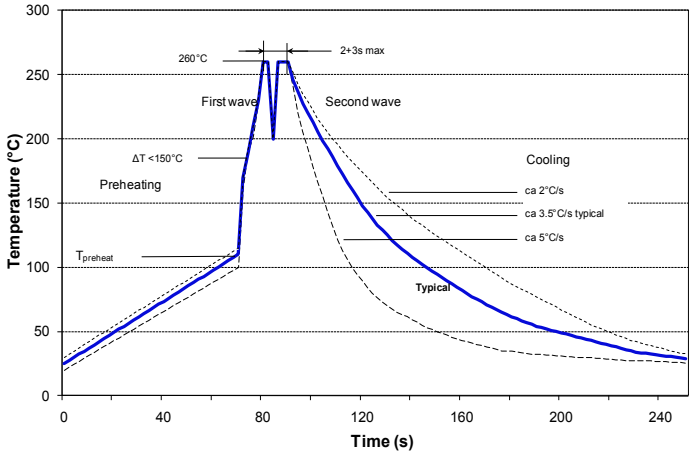

Manual Soldering Recommendations

Following is the recommendation for manual soldering with a soldering iron.

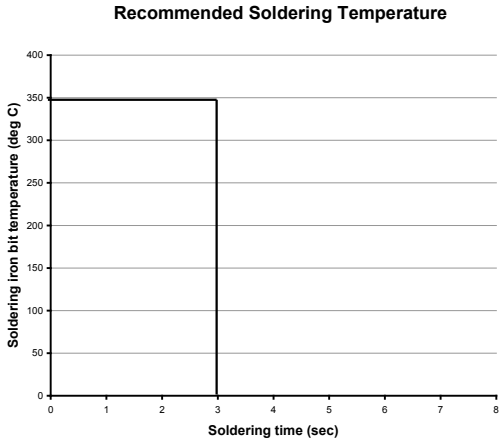

The soldering iron tip temperature should be set at 350°C (+10°C maximum) with the soldering duration not to exceed more than 3 seconds.

Soldering Process cont'd

Selective Soldering Recommendations

Selective dip soldering is a variation of reflow soldering. In this method, the printed circuit board with through-hole components to be soldered is preheated and transported over the solder bath as in normal flow soldering without touching the solder. When the board is over the bath, it is stopped and pre-designed solder pots are lifted from the bath with molten solder only at the places of the selected components, and pressed against the lower surface of the board to solder the components.

The temperature profile for selective soldering is similar to the double wave flow soldering outlined in this document, **however, instead of two baths, there is only one bath with a time from 3 to 10 seconds.** In selective soldering, the risk of overheating is greater than in double wave flow soldering, and great care must be taken so that the parts are not overheated.

Marking

- KEMET or KEC
- Series
- Capacitance
- Capacitance tolerance
- Rated voltage
- X1
- Approval marks
- Manufacturing date code
- IEC climatic category
- Passive flammability class

Lateral Marking	Top Marking
	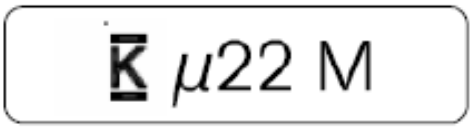

Packaging Quantities

Size Code	Lead Spacing	Thickness (mm)	Height (mm)	Length (mm)	Bulk Short Leads	Bulk Long Leads	Standard Reel ø 355 mm	Large Reel ø 500 mm	Ammo	Pizza
AN	10	3.5	9	13	2000	2200	850	1700	1150	
AG		4	9	13	2000	2200	750	1500	1000	
AK		5	11	13	1300	2000	600	1250	800	
AP		6	12	13	1000	1800	500	1000	680	
AO		7	17	13	600	700	450	900	580	
AL		9.5	7.5	13	1000	1500	300	600	430	
AE		4	8	13	2000	2200	750	1500	1000	
BB	15	4	10	18	2500	1500	750	1500	1000	1411
BC		5	11	18	1000	1250	600	1250	800	1139
BE		5.5	12.5	18	800	1000	550	1100	750	1020
BG		6	12	18	1750	1000	500	1000	680	935
BK		7.5	13.5	18	1000	800	350	800	500	748
BI		6	17.5	18	1000	800	500	1000	680	935
BP		8.5	14.5	18	1000	650	300	700	440	663
BT		9	12.5	18	1000	700	270	650	410	629
BO		7.5	18.5	18	900	500	350	800	500	748
BS		10	16	18	750	550	300	600	380	561
BR		13	12	18	750	520	200	480	280	425
BY		11	19	18	450	400	250	500	340	510
BA		8.5	12.5	18	1000	650	300	700	440	663
BZ		12	20	18	350	300	220	450	330	459
DB	22.5	6	14.5	26	805	450	300	700	464	660
DI		7	16	26	700	450	250	550	380	564
DH		8.0	16.0	26	520	300	240	500	330	492
DJ		8.5	17	26	450	350	250	450	280	468
DM		9	18.5	26	400	225	200	400	300	444
DO		10	18.5	26	360	350	160	350	235	396
DP		11	20	26	300	200	190	350	217	360
DU		13	22	26	230	150	150	300	200	300
DY		15.5	24.5	26	150	100	120	250	170	252

Packaging Quantities cont'd

Size Code	Lead Spacing	Thickness (mm)	Height (mm)	Length (mm)	Bulk Short Leads	Bulk Long Leads	Standard Reel ø 355 mm	Large Reel ø 500 mm	Ammo	Pizza
FB	27.5	9.0	17.0	31.5						370
FC		11.0	20.0	31.5						300
FI		13.0	25.0	31.5						250
FN		14.0	28.0	31.5						230
FO		17.0	40.0	31.5						190
FR		17.5	28.0	31.5						190
FS		19.0	29.0	31.5						170
FY		22.0	37.0	31.5						150
FH		21.0	12.5	31.5						150
FQ		27.5	16.0	31.5						120
FT		31.0	19.0	31.5						100
RB	37.5	11.0	22.0	41.0						210
RF		13.0	24.0	41.0						175
RH		15.0	26.0	41.0						154
RC		16.0	28.5	41.0						140
RD		19.0	32.0	41.0						119
RP		21.0	38.0	41.0						105
RO		24.0	44.0	41.0						91
RU		30.0	45.0	41.0						77
RV		24.0	15.0	41.0						91
RW		24.0	19.0	41.0						91

Lead Taping & Packaging (IEC 60286–2)

Lead Spacing 5 mm

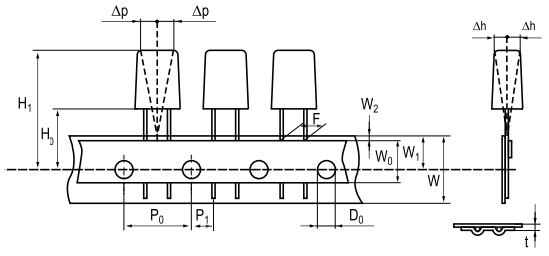

Lead Spacing 7.5 mm

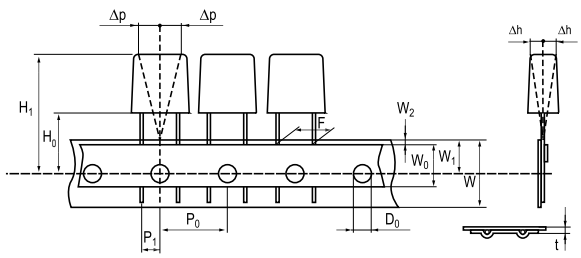

Lead Spacing 10 – 15 mm

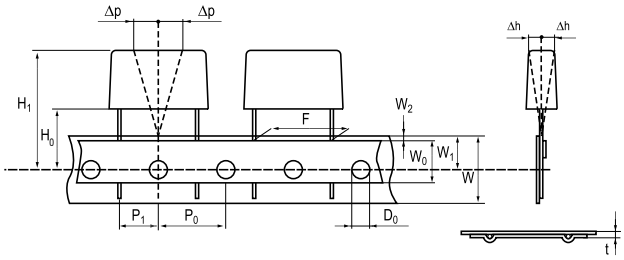

Lead Spacing 22.5 – 27.5 mm

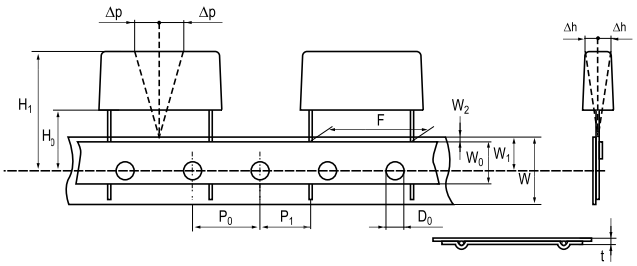

Taping Specification

Dimensions in mm									Standard IEC 60286–2
Lead spacing	+6/-0.1	F	5	7.5	10	15	22.5	27.5	F
Carrier tape width	+1/-0.5	W	18	18	18	18	18	18	$18^{+1/-0.5}$
Hold-down tape width	Minimum	W_0	6	6	9	10	10	10	
Position of sprocket hole	+/-0.5	W_1	9	9	9	9	9	9	$9^{+0.75/-0.5}$
Distance between tapes	Maximum	W_2	3	3	3	3	3	3	3
Sprocket hole diameter	+/-0.2	D_0	4	4	4	4	4	4	4
Feed hole lead spacing	+/-0.2(1)	P_0(3)	12.7	12.7	12.7	12.7	12.7	12.7	12.7
Distance lead – feed hole	+/-0.7	P_1	3.85	3.75	7.7	5.2	7.8	5.3	P1
Deviation tape – plane	Maximum	Δp	1.3	1.3	1.3	1.3	1.3	1.3	1.3
Lateral deviation	+/-2	Δh	2	2	2	2	2	2	2
Total thickness	+/-0.2	t	0.7	0.7	0.7	0.7	0.9^{MAX}	0.9^{MAX}	0.9^{MAX}
Sprocket hole/cap body	+/-0.5	H_0(2)	$18.5^{+/-0.5}$	$18.5^{+/-0.5}$	$18.5^{+/-0.5}$	$18.5^{+/-0.5}$	$18.5^{+/-0.5}$	$18.5^{+/-0.5}$	$18^{+2/-0}$

(1) Maximum cumulative feed hole error, 1 mm per 20 parts.
(2) 16.5 mm available on request.
(3) 15 mm available on request (F ≥ 10 mm).

Lead Taping & Packaging (IEC 60286–2) cont'd

Ammo Specifications

Series	Dimensions (mm)		
	H	W	T
R4x, R4x+R, R7x, RSB	360	340	59
F5A, F5B, F5D			
F6xx, F8xx			
PHExxx, PMExxx, PMRxxx	330	330	50

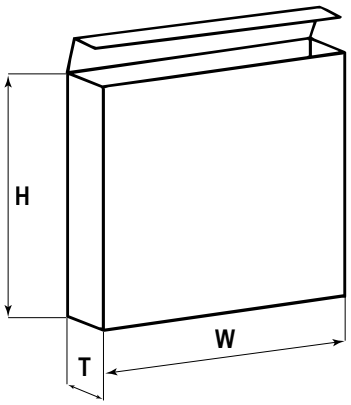

Reel Specifications

Series	Dimensions (mm)		
	D	H	W
R4x, R4x+R, R7x, RSB	355	30	55 (Max)
F5A, F5B, F5D	500	25	
F6xx, F8xx			
PHExxx, PMExxx, PMRxxx	360 500	30	46 (Max)

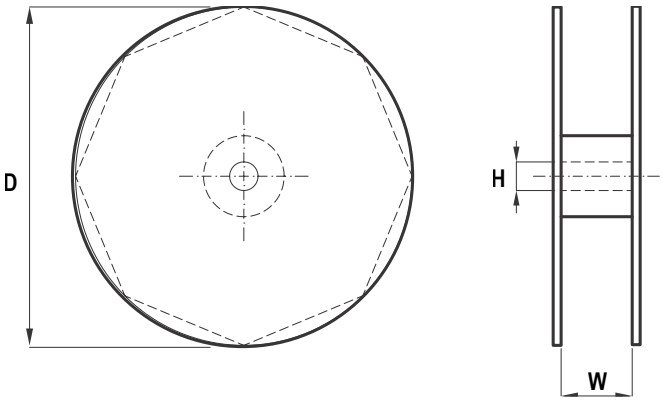

Manufacturing Date Code (IEC–60062)

Y = Year, Z = Month			
Year	Code	Month	Code
2000	M	January	1
2001	N	February	2
2002	P	March	3
2003	R	April	4
2004	S	May	5
2005	T	June	6
2006	U	July	7
2007	V	August	8
2008	W	September	9
2009	X	October	O
2010	A	November	N
2011	B	December	D
2012	C		
2013	D		
2014	E		
2015	F		
2016	H		
2017	J		
2018	K		
2019	L		
2020	M		

KEMET Corporation World Headquarters

2835 KEMET Way
Simpsonville, SC 29681

Mailing Address:
P.O. Box 5928
Greenville, SC 29606

www.kemet.com
Tel: 864-963-6300
Fax: 864-963-6521

Corporate Offices
Fort Lauderdale, FL
Tel: 954-766-2800

North America

Southeast
Lake Mary, FL
Tel: 407-855-8886

Northeast
Wilmington, MA
Tel: 978-658-1663

Central
Novi, MI
Tel: 248-306-9353

West
Milpitas, CA
Tel: 408-433-9950

Mexico
Guadalajara, Jalisco
Tel: 52-33-3123-2141

Europe

Southern Europe
Paris, France
Tel: 33-1-4646-1006

Sasso Marconi, Italy
Tel: 39-051-939111

Central Europe
Landsberg, Germany
Tel: 49-8191-3350800

Kamen, Germany
Tel: 49-2307-438110

Northern Europe
Bishop's Stortford, United Kingdom
Tel: 44-1279-460122

Espoo, Finland
Tel: 358-9-5406-5000

Asia

Northeast Asia
Hong Kong
Tel: 852-2305-1168

Shenzhen, China
Tel: 86-755-2518-1306

Beijing, China
Tel: 86-10-5829-1711

Shanghai, China
Tel: 86-21-6447-0707

Taipei, Taiwan
Tel: 886-2-27528585

Southeast Asia
Singapore
Tel: 65-6586-1900

Penang, Malaysia
Tel: 60-4-6430200

Bangalore, India
Tel: 91-806-53-76817

Note: KEMET reserves the right to modify minor details of internal and external construction at any time in the interest of product improvement. KEMET does not assume any responsibility for infringement that might result from the use of KEMET Capacitors in potential circuit designs. KEMET is a registered trademark of KEMET Electronics Corporation.

Disclaimer

All product specifications, statements, information and data (collectively, the “Information”) in this datasheet are subject to change. The customer is responsible for checking and verifying the extent to which the Information contained in this publication is applicable to an order at the time the order is placed.

All Information given herein is believed to be accurate and reliable, but it is presented without guarantee, warranty, or responsibility of any kind, expressed or implied.

Statements of suitability for certain applications are based on KEMET Electronics Corporation’s (“KEMET”) knowledge of typical operating conditions for such applications, but are not intended to constitute – and KEMET specifically disclaims – any warranty concerning suitability for a specific customer application or use. The Information is intended for use only by customers who have the requisite experience and capability to determine the correct products for their application. Any technical advice inferred from this Information or otherwise provided by KEMET with reference to the use of KEMET’s products is given gratis, and KEMET assumes no obligation or liability for the advice given or results obtained.

Although KEMET designs and manufactures its products to the most stringent quality and safety standards, given the current state of the art, isolated component failures may still occur. Accordingly, customer applications which require a high degree of reliability or safety should employ suitable designs or other safeguards (such as installation of protective circuitry or redundancies) in order to ensure that the failure of an electrical component does not result in a risk of personal injury or property damage.

Although all product–related warnings, cautions and notes must be observed, the customer should not assume that all safety measures are indicted or that other measures may not be required.