KEMET Part Number: C0805C105M4RACTU

(C0805C105M4RAC7800)

SMD Comm X7R, Ceramic, 1 uF, 20%, 16 VDC, X7R, SMD, MLCC, Temperature Stable, Class II, 0805

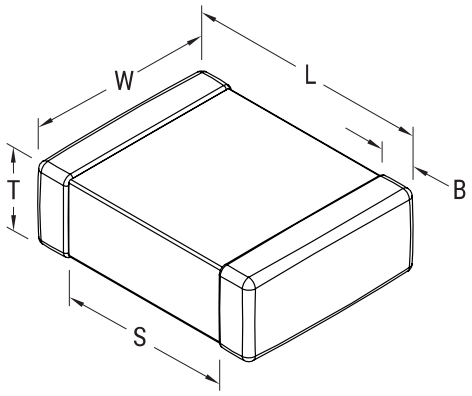

Dimensions	
L	2mm +/-0.2mm
W	1.25mm +/-0.2mm
T	0.9mm +/-0.10mm
S	0.75mm MIN
B	0.5mm +/-0.25mm

Packaging Specifications	
Packaging:	T&R, 180mm, Paper Tape
Packaging Quantity:	4000

General Information	
Series:	SMD Comm X7R
Style:	SMD Chip
Description:	SMD, MLCC, Temperature Stable, Class II
Features:	Temperature Stable, Class II
RoHS:	Yes
Termination:	Tin
Marking:	No
AEC-Q200:	No
Miscellaneous:	Note: Referee time for X7R dielectric for this part number is 48 hours
Chip Size:	0805
Shelf Life:	78 Weeks
MSL:	1

Specifications	
Capacitance:	1000000 pF, 1kHz 1.0Vrms
Capacitance Tolerance:	20%
Voltage DC:	16 VDC
Dielectric Withstanding Voltage:	40 VDC
Temperature Range:	-55/+125°C
Temperature Coefficient:	X7R
Capacitance Change with Reference to +25°C and 0 VDC Applied (TCC):	15%, 1kHz 1.0Vrms
Dissipation Factor:	3.50% 1kHz 1.0Vrms
Aging Rate:	3% Loss/Decade Hour
Insulation Resistance:	500 MOhms

Statements of suitability for certain applications are based on our knowledge of typical operating conditions for such applications, but are not intended to constitute - and we specifically disclaim - any warranty concerning suitability for a specific customer application or use. This Information is intended for use only by customers who have the requisite experience and capability to determine the correct products for their application. Any technical advice inferred from this Information or otherwise provided by us with reference to the use of our products is given gratis, and we assume no obligation or liability for the advice given or results obtained.

© 2006 - 2019 KEMET