8Gb (x16 x 2 channel) Mobile LPDDR4/LPDDR4X

MARCH 2026

FEATURES

- Configuration:
  - 256Mb x16 x 2 channels
  - 8 internal banks per channel
- Low-voltage Core and I/O Power Supplies
  VDD1 = 1.70-1.95V
  VDD2 = 1.06-1.17V
  VDDQ = 1.06-1.17V (LPDDR4)
  VDDQ = 0.57-0.65V (LPDDR4X)
- LVSTL(Low Voltage Swing Terminated Logic) I/O Interface
- Internal VREF and VREF Training
- Dynamic ODT :
  DQ ODT :VSSQ Termination
  CA ODT :VSS Termination
- Max. Clock Frequency : 1866MHz (3733Mbps)
- 16n Pre-fetch DDR architecture
- Single data rate (multiple cycles) command/ address bus
- Bidirectional/differential data strobe per byte of data (DQS/DQS#)
- Programmable and on-the-fly burst lengths (BL=16, 32)
- ZQ Calibration
- Operation Temperature
  Industrial (T_C = -40°C to 95°C)
  Automotive, A1 (T_C = -40°C to 95°C)
  Automotive, A2 (T_C = -40°C to 105°C)
  Automotive, A3 (T_C = -40°C to 125°C)
- Clock-Stop capability
- Green Package:
  200-ball BGA (10mm x 14.5mm)

DESCRIPTION

The IS43/46LQ32256B and IS43/46LQ32256BL are 8Gbit CMOS LPDDR4 SDRAM. The device is organized as 2 channels per device, and each channel is 8-banks and 16-bits. This product uses a double data rate architecture to achieve high-speed operation. The double data rate architecture is essentially a 16N prefetch architecture with an interface designed to transfer two data words per clock cycle at the I/O pins. This product offers fully synchronous operations referenced to both rising and falling edges of the clock. The data paths are internally pipelined and 16n bits prefetched to achieve very high bandwidth.

- On-chip temperature sensor whose status can be read from MR4

ADDRESS TABLE

Parameter	
# of Channels	2
Row Addresses	R0-R14
Column Addresses	C0-C9
Bank Addresses	BA0-BA2

Note: Address information is per channel.

KEY TIMING PARAMETERS

Speed Grade	Freq. (MHz)	Data Rate (Mb/s)	Write Latency		Read Latency	
			Set A	Set B	DBI OFF	DBI ON
-053	1866	3733	16	30	32	36
-062	1600	3200	14	26	28	32

Note: Other clock frequencies/data rates supported; please refer to AC timing tables.

Copyright © 2026 Integrated Silicon Solution, Inc. All rights reserved. ISSI reserves the right to make changes to this specification and its products at any time without notice. ISSI assumes no liability arising out of the application or use of any information, products or services described herein. Customers are advised to obtain the latest version of this device specification before relying on any published information and before placing orders for products.

Integrated Silicon Solution, Inc. does not recommend the use of any of its products in life support applications where the failure or malfunction of the product can reasonably be expected to cause failure of the life support system or to significantly affect its safety or effectiveness. Products are not authorized for use in such applications unless Integrated Silicon Solution, Inc. receives written assurance to its satisfaction, that:
a.) the risk of injury or damage has been minimized;
b.) the user assume all such risks; and
c.) potential liability of Integrated Silicon Solution, Inc is adequately protected under the circumstances

1. BALL ASSIGNMENTS AND DESCRIPTIONS

200-ball x32 Discrete Package, 0.80mm x 0.65mm using MO-311

0.80mm Pitch

0.65mm Pitch

	1	2	3	4	5	6	7	8	9	10	11	12
A	DNU	DNU	VSS	VDD2	ZQ0			NC	VDD2	VSS	DNU	DNU
B	DNU	DQ0_A	VDDQ	DQ7_A	VDDQ			VDDQ	DQ15_A	VDDQ	DQ8_A	DNU
C	VSS	DQ1_A	DMI0_A	DQ6_A	VSS			VSS	DQ14_A	DMI1_A	DQ9_A	VSS
D	VDDQ	VSS	DQS0_T_A	VSS	VDDQ			VDDQ	VSS	DQS1_T_A	VSS	VDDQ
E	VSS	DQ2_A	DQS0_C_A	DQ5_A	VSS			VSS	DQ13_A	DQS1_C_A	DQ10_A	VSS
F	VDD1	DQ3_A	VDDQ	DQ4_A	VDD2			VDD2	DQ12_A	VDDQ	DQ11_A	VDD1
G	VSS	ODT_CA_A (3)	VSS	VDD1	VSS			VSS	VDD1	VSS	NC	VSS
H	VDD2	CA0_A	NC	CS0_A	VDD2			VDD2	CA2_A	CA3_A	CA4_A	VDD2
J	VSS	CA1_A	VSS	CKE0_A	NC			CK_t_A	CK_c_A	VSS	CA5_A	VSS
K	VDD2	VSS	VDD2	VSS	NC			NC	VSS	VDD2	VSS	VDD2
L												
M												
N	VDD2	VSS	VDD2	VSS	NC			NC	VSS	VDD2	VSS	VDD2
P	VSS	CA1_B	VSS	CKE0_B	NC			CK_T_B	CK_C_B	VSS	CA5_B	VSS
R	VDD2	CA0_B	NC	CS0_B	VDD2			VDD2	CA2_B	CA3_B	CA4_B	VDD2
T	VSS	ODT_CA_B (3)	VSS	VDD1	VSS			VSS	VDD1	VSS	RESET_N	VSS
U	VDD1	DQ3_B	VDDQ	DQ4_B	VDD2			VDD2	DQ12_B	VDDQ	DQ11_B	VDD1
V	VSS	DQ2_B	DQS0_C_B	DQ5_B	VSS			VSS	DQ13_B	DQS1_C_B	DQ10_B	VSS
W	VDDQ	VSS	DQS0_T_B	VSS	VDDQ			VDDQ	VSS	DQS1_T_B	VSS	VDDQ
Y	VSS	DQ1_B	DMI0_B	DQ6_B	VSS			VSS	DQ14_B	DMI1_B	DQ9_B	VSS
AA	DNU	DQ0_B	VDDQ	DQ7_B	VDDQ			VDDQ	DQ15_B	VDDQ	DQ8_B	DNU
AB	DNU	DNU	VSS	VDD2	VSS			VSS	VDD2	VSS	DNU	DNU

NOTE 1 0.8mm pitch (X-axis), 0.65mm pitch (Y-axis), 22 rows.

NOTE 2 Top View, A1 in top left corner.

NOTE 3 The ODT_CA pin is ignored by LPDDR4X devices.

2. INPUT/OUTPUT FUNTIONAL DESCRIPTION

2.1 PAD DEFINITION AND DESCRIPTION

Table 2.1 — Pad Definition and Description

Symbol	Type	Description
CK_t_A, CK_c_A, CK_t_B, CK_c_B	Input	**Clock:** CK_t and CK_c are differential clock inputs. All address, command, and control input signals are sampled on the crossing of the positive edge of CK_t and the negative edge of CK_c. AC timings for CA parameters are referenced to CK. Each channel (A & B) has its own clock pair.
CKE_A CKE_B	Input	**Clock Enable:** CKE HIGH activates and CKE LOW deactivates the internal clock circuits, input buffers, and output drivers. Power-saving modes are entered and exited via CKE transitions. CKE is part of the command code. Each channel (A & B) has its own CKE signal.
CS_A CS_B	Input	**Chip Select:** CS is part of the command code. Each channel (A & B) has its own CS signal.
CA[5:0]_A CA[5:0]_B	Input	**Command/Address Inputs:** CA signals provide the Command and Address inputs according to the Command Truth Table. Each channel (A&B) has its own CA signals.
ODT_CA_A ODT_CA_B	Input	**LPDDR4 CA ODT Control:** The ODT_CA pin is used in conjunction with the Mode Register to turn on/off the On-Die-Termination for CA pins. **LPDDR4X CA ODT Control:** The ODT_CA pin is ignored by LPDDR4X devices. CA ODT is fully controlled through MR11 and MR22. The ODT_CA pin shall be connected to either VDD2 or VSS.
DQ[15:0]_A, DQ[15:0]_B	I/O	**Data Input/Output:** Bi-direction data bus.
DQS[1:0]_t_A, DQS[1:0]_c_A, DQS[1:0]_t_B, DQS[1:0]_c_B	I/O	**Data Strobe:** DQS_t and DQS_c are bi-directional differential output clock signals used to strobe data during a READ or WRITE. The Data Strobe is generated by the DRAM for a READ and is edge-aligned with Data. The Data Strobe is generated by the Memory Controller for a WRITE and must arrive prior to Data. Each byte of data has a Data Strobe signal pair. Each channel (A & B) has its own DQS strobes.
DMI[1:0]_A, DMI[1:0]_B	I/O	**Data Mask Inversion:** DMI is a bi-directional signal which is driven HIGH when the data on the data bus is inverted, or driven LOW when the data is in its normal state. Data Inversion can be disabled via a mode register setting. Each byte of data has a DMI signal. Each channel (A & B) has its own DMI signals.
ZQ	Reference	**Calibration Reference:** Used to calibrate the output drive strength and the termination resistance. There is one ZQ pin per die. The ZQ should be connected to VDDQ through a 240Ω ± 1% resistor. This connection affects the functionality of RZQ. This is further described in the section on MR0 Register Information.
$V_{DD}Q$, $V_{DD}1$, $V_{DD}2$	Supply	**Power Supplies:** Isolated on the die for improved noise immunity.
V_{SS}, $V_{SS}Q$	GND	**Ground Reference:** Power supply ground reference
RESET_n	Input	**RESET:** When asserted LOW, the RESET_n signal resets both channels of the die.

3. FUNCTIONAL DESCRIPTION

LPDDR4-SDRAM is a high-speed synchronous DRAM device internally configured with either 1 or 2 channels. Single-channel is comprised of 8-banks and it is defined from 1Gb to 16Gb in total density. Dual channel is comprised of 8-banks and it is defined from 2Gb to 32Gb in total density.

LPDDR4 devices use a 2 or 4 clocks architecture on the Command/Address (CA) bus to reduce the number of input pins in the system. The 6-bit CA bus contains command, address, and bank information. Each command uses 1, 2 or 4 clock cycle, during which command information is transferred on the positive edge of the clock.

These devices use a double data rate architecture on the DQ pins to achieve high speed operation. The double data rate architecture is essentially an 16n prefetch architecture with an interface designed to transfer two data bits per DQ every clock cycle at the I/O pins. A single read or write access for the LPDDR4 SDRAM effectively consists of a single 16n-bit wide, one clock cycle data transfer at the internal DRAM core and eight corresponding n-bit wide, one half-clock-cycle data transfers at the I/O pins. Read and write accesses to the LPDDR4 SDRAMs are burst oriented; accesses start at a selected location and continue for a programmed number of locations in a programmed sequence. Accesses begin with the registration of an Activate command, which is then followed by a Read, Write or Mask Write command.

The address and BA bits registered coincident with the Activate command are used to select the row and the bank to be accessed. The address bits registered coincident with the Read, Write or Mask Write command are used to select the bank and the starting column location for the burst access.

Prior to normal operation, the LPDDR4 SDRAM must be initialized. The following provides detailed information covering device initialization, register definition, command description and device operation.

3.1 LPDDR4 SDRAM Addressing

Table 3.1 LPDDR4 SDRAM Addressing

Memory Density		2Gb	4Gb	6Gb	**8Gb**	12Gb	16Gb	32Gb
Memory Density (per channel)		1Gb	2Gb	3Gb	4Gb	6Gb	8Gb	16Gb
Configuration		8Mb x 16DQ x 8 banks x 2 channels	16Mb x 16DQ x 8 banks x 2 channels	24Mb x 16DQ x 8 banks x 2 channels	32Mb x 16DQ x 8 banks x 2 channels	48Mb x 16DQ x 8 banks x 2 channels	64Mb x 16DQ x 8 banks x 2 channels	128Mb x 16DQ x 8 banks x 2 channels
Number of Channels		2	2	2	2	2	2	2
Number of Banks (per Channel)		8	8	8	8	8	8	8
Array Pre-Fetch (bits, per channel)		256	256	256	256	256	256	256
Number of Rows (per Channel)		8,192	16,384	24,576	32,768	49,152	65,536	131,072
Number of Columns (fetch boundaries)		64	64	64	64	64	64	64
Page Size (Bytes)		2048	2048	2048	2048	2048	2048	2048
Channel Density (Bits per channel)		1,073,741,824	2,147,483,648	3,221,225,472	4,294,967,296	6,442,450,944	8,589,934,592	17,179,869,184
Total Density		2,147,483,648	4,294,967,296	6,442,450,944	8,589,934,592	12,884,901,888	17,179,869,184	34,359,738,368
Bank Address		BA0 - BA2	BA0 - BA2	BA0 - BA2	BA0 - BA2	BA0 - BA2	BA0 - BA2	BA0 - BA2
x16	Row Addresses	R0 - R12	R0 - R13	R0 - R14 (R13=0 when R14=1)	R0 - R14	R0 - R15 (R14=0 when R15=1)	R0 - R15	R0 - R16
	Column Addresses	C0 - C9	C0 - C9	C0 - C9	C0 - C9	C0 - C9	C0 - C9	C0 - C9
Burst Starting Address Boundary		64 - bit	64 - bit	64 - bit	64 - bit	64 - bit	64 - bit	64 - Bit

NOTE 1 The lower two column addresses (C0 - C1) are assumed to be “zero” and are not transmitted on the CA bus.
NOTE 2 Row and Column address values on the CA bus that are not used for a particular density be at valid logic levels.
NOTE 3 For non - binary memory densities,only half of the row address space is valid. When the MSB address bit is “HIGH”, then the MSB - 1 address bit must be “LOW”.
NOTE 4 The row address input which violates restriction described in note 3 may result in undefined or vendor specific behavior. Consult memory vendor for more information.

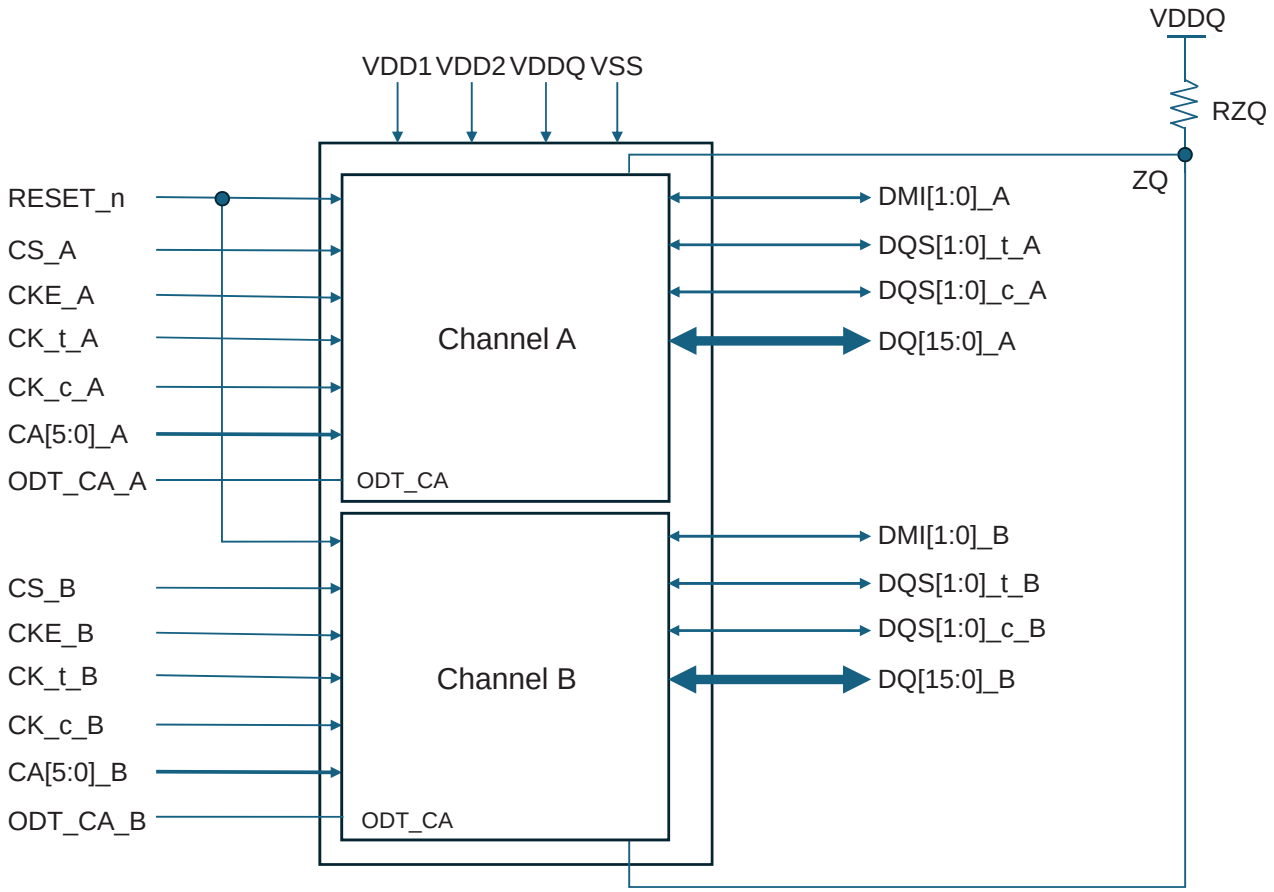

Figure 3.1 – Dual-channel (x32), Single-rank Package Diagram

3.2 SIMPLIFIED LPDDR4 STATE DIAGRAM

LPDDR4-SDRAM state diagram provides a simplified illustration of allowed state transitions and the related commands to control them. For a complete definition of the device behavior, the information provided by the state diagram should be integrated with the truth tables and timing specification.

The truth tables provide complementary information to the state diagram, they clarify the device behavior and the applied restrictions when considering the actual state of all the banks.

For the command definition, see clause 4, Command Definition and Timing Diagram.

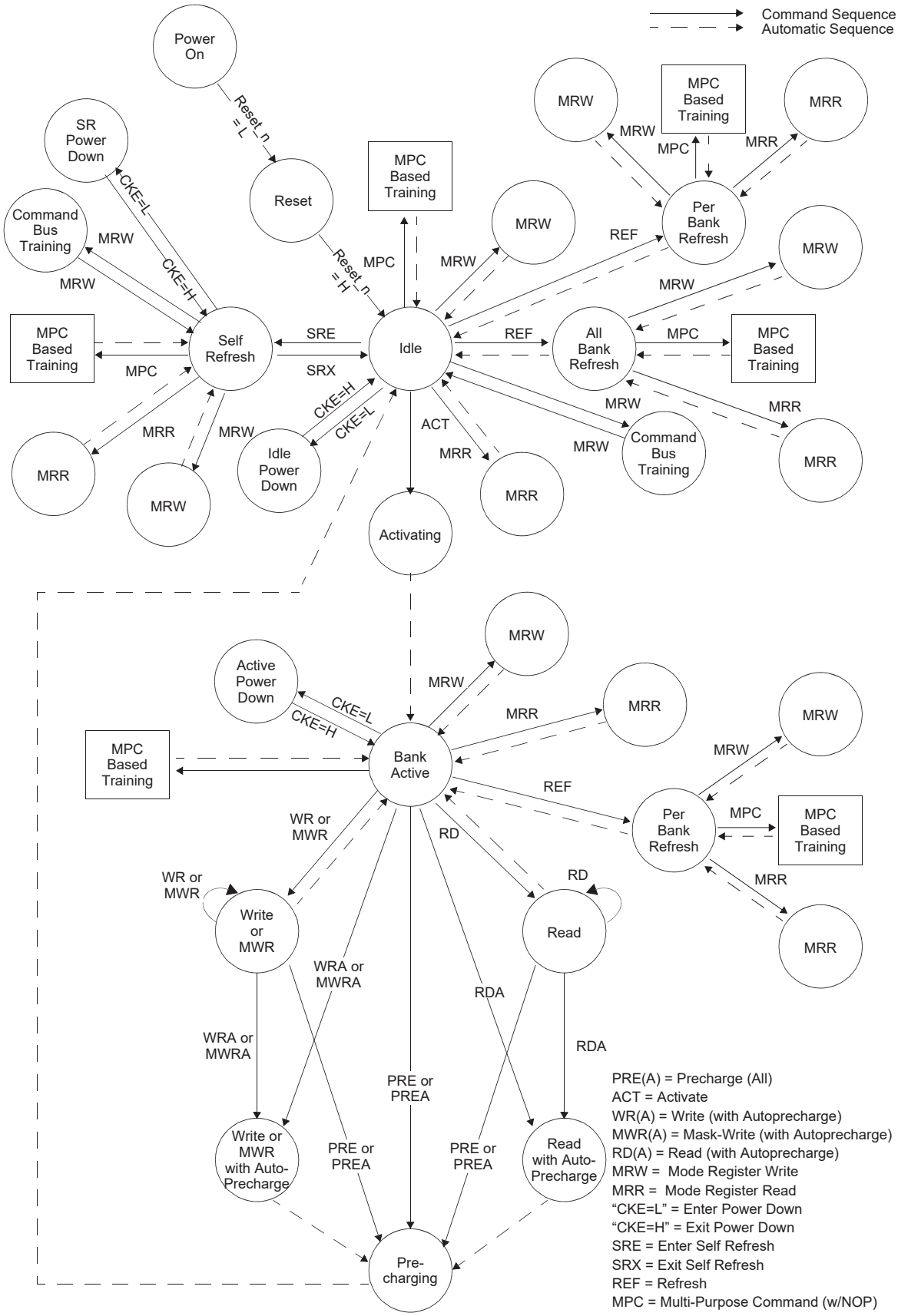

Figure 3.2 — LPDDR4: Simplified Bus Interface State Diagram - 1

SIMPLIFIED STATE DIAGRAM

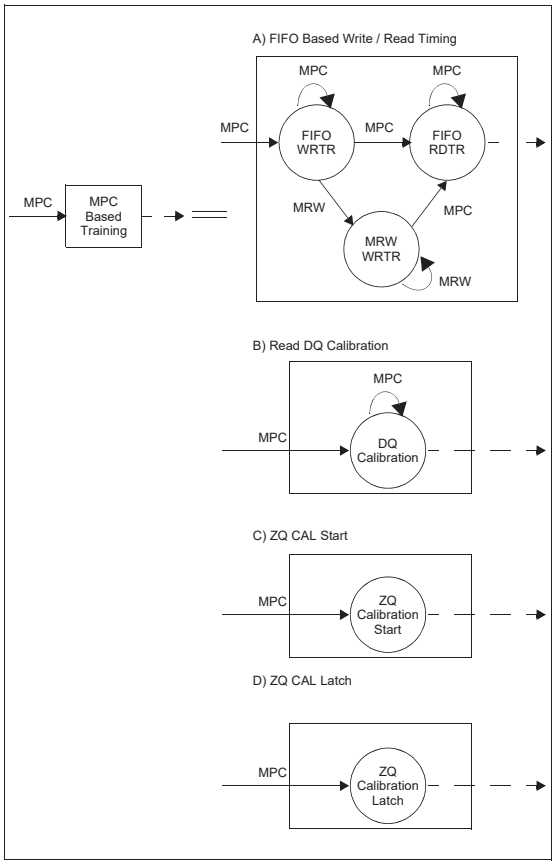

NOTE 1 From the Self-Refresh state the device can enter Power-Down, MRR, MRW, or MPC states. See 4.13 on Self-Refresh for more information.
NOTE 2 In IDLE state, all banks are pre-charged.
NOTE 3 In the case of a MRW command to enter a training mode, the state machine will not automatically return to the IDLE state at the conclusion of training. See 4.17, on Mode Register Write (MRW) for more information.
NOTE 4 In the case of a MPC command to enter a training mode, the state machine may not automatically return to the IDLE state at the conclusion of training. See 4.28, Multi-Purpose Command (MPC) for more information.
NOTE 5 This simplified State Diagram is intended to provide an overview of the possible state transitions and the commands to control them. In particular, situations involving more than one bank, the enabling or disabling of on-die termination, and some other events are not captured in full detail.
NOTE 6 States that have an “automatic return” and can be accessed from more than one prior state (e.g., MRW from either Idle or Active states) will return to the state from when they were initiated (e.g., MRW from Idle will return to Idle).
NOTE 7 The RESET_n pin can be asserted from any state, and will cause the SDRAM to go to the Reset State. The diagram shows RESET applied from the Power-On as an example, but the Diagram should not be construed as a restriction on RESET_n.

Figure 3.3 — LPDDR4:Simplified Bus Interface State Diagram -2

3.3 POWER-UP, INITIALIZATION and POWER-OFF PROCEDURE

For power-up and reset initialization, in order to prevent DRAM from functioning improperly, default values of the following MR settings are defined as in this table.

Table 3.2 — MRS defaults settings

Item	MRS	Default Setting	Description
FSP-OP/WR	MR13 OP[7:6]	00_B	FSP-OP/WR[0] are enabled
WLS	MR2 OP[6]	0_B	Write Latency Set 0 is selected
WL	MR2 OP[5:3]	000_B	WL = 4
RL	MR2 OP[2:0]	000_B	RL = 6, nRTP=8
nWR	MR1 OP[6:4]	000_B	nWR = 6
DBI-WR/RD	MR3 OP[7:6]	00_B	Write & Read DBI are disabled
CA ODT	MR11 OP[6:4]	000_B	CA ODT is disabled
DQ ODT	MR11 OP[2:0]	000_B	DQ ODT is disabled
V_{REF}(CA) Setting	MR12 OP[6]	1_B	V_{REF}(CA) Range[1] enabled
V_{REF}(CA) Value	MR12 OP[5:0]	001101_B	Range1 : 27.2% of V_{DD2} for LPDDR4
		011101_B	Range1 : 50.3% of V_{DDQ} for LPDDR4X
V_{REF}(DQ) Setting	MR14 OP[6]	1_B	V_{REF}(DQ) Range[1] enabled
V_{REF}(DQ) Value	MR14 OP[5:0]	001101_B	Range1 : 27.2% of V_{DDQ} for LPDDR4
		011101_B	Range1 : 50.3% of V_{DDQ} for LPDDR4X

3.3.1 Voltage Ramp and Device Initialization

The following sequence shall be used to power up the LPDDR4 device. Unless specified otherwise, these steps are mandatory. Note that the power-up sequence of all channels must proceed simultaneously.

1. While applying power (after Ta), RESET_n should be held LOW (≤0.2 x V_{DD2}) and all other inputs must be between VILmin and VIHmax. The device outputs remain at High-Z while RESET_n is held LOW. Power supply voltage ramp requirements are provided in this table. V_{DD1} must ramp at the same time or earlier than V_{DD2}. V_{DD2} must ramp at the same time or earlier than V_{DDQ}.

Table 3.3 — Voltage Ramp Conditions

After	Applicable Conditions
Ta is reached	V_{DD1} must be greater than V_{DD2}
	V_{DD2} must be greater than V_{DDQ} - 200mV

NOTE 1 Ta is the point when any power supply first reaches 300mV.
NOTE 2 Voltage ramp conditions in this table apply between Ta and power-off (controlled or uncontrolled).
NOTE 3 Tb is the point at which all supply and reference voltages are within their defined ranges.
NOTE 4 Power ramp duration tINIT0 (Tb-Ta) must not exceed 20ms.
NOTE 5 The voltage difference between any of V_{SS} and V_{SSQ} pins must not excess 100mV.

2. Following the completion of the voltage ramp (Tb), RESET_n must be maintained LOW. DQ, DMI, DQS_t and DQS_c voltage levels must be between V_{SSQ} and V_{DDQ} during voltage ramp to avoid latch-up. CKE, CK_t, CK_c, CS_n and CA input levels must be between V_{SS} and V_{DD2} during voltage ramp to avoid latch-up.

3. Beginning at Tb, RESET_n must remain LOW for at least tINIT1(Tc), after which RESET_n can be deasserted to HIGH(Tc). At least 10ns before RESET_n de-assertion, CKE is required to be set LOW. All other input signals are "Don't Care".

4. After RESET_n is de-asserted(Tc), wait at least tINIT3 before activating CKE. Clock(CK_t,CK_c) is required to be started and stabilized for tINIT4 before CKE goes active(Td). CS is required to be maintained LOW when controller activates CKE.
5. After setting CKE high, wait minimum of tINIT5 to issue any MRR or MRW commands(Te). For both MRR and MRW commands, the clock frequency must be within the range defined for tCKb. Some AC parameters (for example, tDQSCK) could have relaxed timings (such as tDQSCKb) before the system is appropriately configured.

6. After completing all MRW commands to set the Pull-up, Pull-down and Rx termination values, the DRAM controller can issue ZQCAL Start command to the memory(Tf). This command is used to calibrate VOH level and output impedance over process, voltage and temperature. In systems where more than one LPDDR4 DRAM devices share one external ZQ resistor, the controller must not overlap the ZQ calibration sequence of each LPDDR4 device. ZQ calibration sequence is completed after tZQCAL (Tg) and the ZQCAL Latch command must be issued to update the DQ drivers and DQ+CA ODT to the calibrated values.

7. After tZQLAT is satisfied (Th) the command bus (internal V_{REF}(CA), CS, and CA) should be trained for high-speed operation by issuing an MRW command (Command Bus Training Mode). This command is used to calibrate the device's internal V_{REF} and align CS/CA with CK for high-speed operation. The LPDDR4 device will power-up with receivers configured for low-speed operations, and V_{REF}(CA) set to a default factory setting. Normal device operation at clock speeds higher than tCKb may not be possible until command bus training has been completed.

   NOTE: The command bus training MRW command uses the CA bus as inputs for the calibration data stream, and outputs the results asynchronously on the DQ bus. See 4.25, (item 1.), MRW for information on how to enter/exit the training mode.

8. After command bus training, DRAM controller must perform write leveling. Write leveling mode is enabled when MR2 OP[7] is high (Ti). See 4.27, Mode Register Write-WR Leveling Mode, for detailed description of write leveling entry and exit sequence. In write leveling mode, the DRAM controller adjusts write DQS_t/_c timing to the point where the LPDDR4 device recognizes the start of write DQ data burst with desired write latency.

9. After write leveling, the DQ Bus (internal V_{REF}(DQ), DQS, and DQ) should be trained for high-speed operation using the MPC training commands and by issuing MRW commands to adjust V_{REF}(DQ)(Tj). The LPDDR4 device will power-up with receivers configured for low-speed operations and V_{REF}(DQ) set to a default factory setting. Normal device operation at clock speeds higher than tCKb should not be attempted until DQ Bus training has been completed. The MPC Read Calibration command is used together with MPC FIFO Write/Read commands to train DQ bus without disturbing the memory array contents. See DQ Bus Training section for detailed DQ Bus Training sequence.

10. At Tk the LPDDR4 device is ready for normal operation, and is ready to accept any valid command. Any more registers that have not previously been set up for normal operation should be written at this time. Additionally, the initial valid command access time from time Tb to Tk must be greater than 2.2 milliseconds.

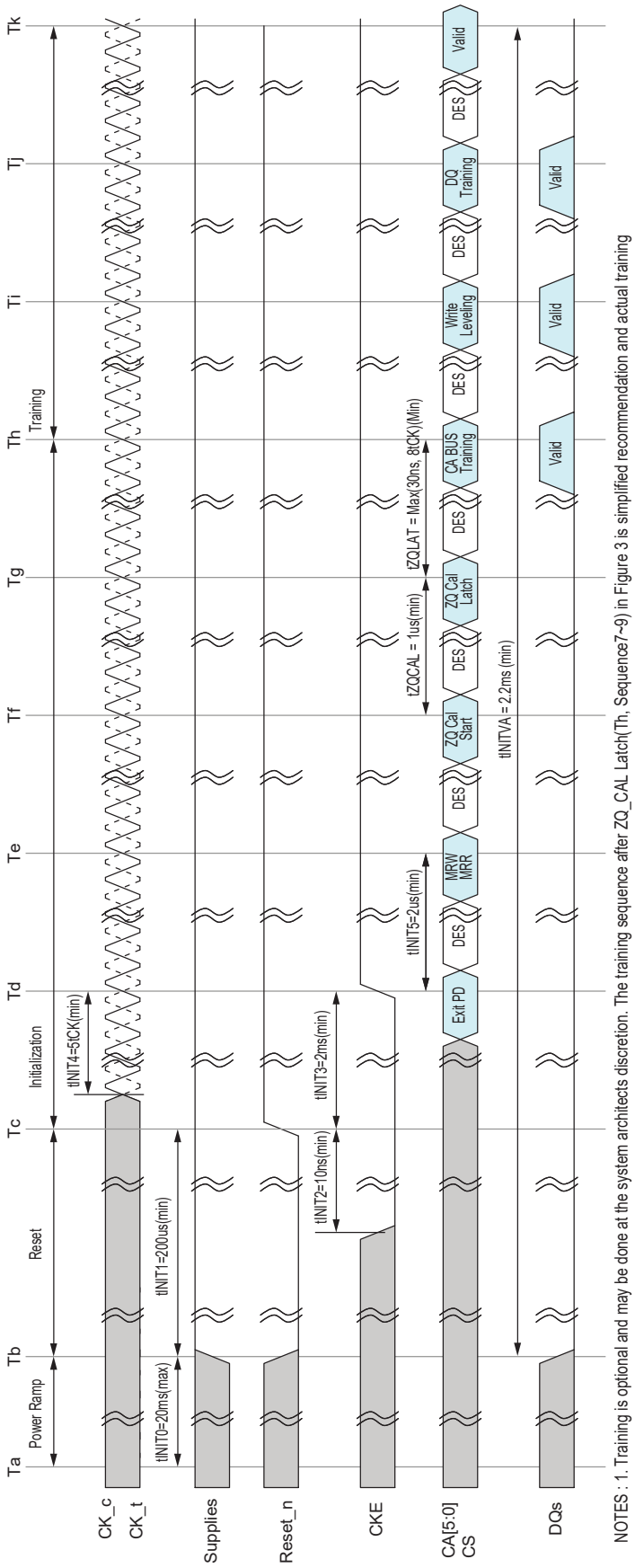

NOTES : 1. Training is optional and may be done at the system architects discretion. The training sequence after ZQ_CAL Latch(Th, Sequence7~9) in Figure 3 is simplified recommendation and actual training sequence may vary depending on systems.

Figure 3.4 — Power Ramp and Initialization Sequence

Table 3.4 — Initialization Timing Parameters

Parameter	Value		Unit	Comment
	Min	Max		
tINIT0	-	20	ms	Maximum voltage-ramp time
tINIT1	200	-	us	Minimum RESET_n LOW time after completion of voltage ramp
tINIT2	10	-	ns	Minimum CKE low time before RESET_n high
tINIT3	2	-	ms	Minimum CKE low time after RESET_n high
tINIT4	5	-	tCK	Minimum stable clock before first CKE high
tINIT5	2	-	us	Minimum idle time before first MRW/MRR command
tZQCAL	1	-	us	ZQ calibration time
tZQLAT	Max(30ns, 8tCK)	-	ns	ZQCAL latch quiet time.
tCKb	Note *1,2	Note *1,2	ns	Clock cycle time during boot
tINITVA	2.2	-	ms	Time from stable power (Tb) to first valid command (Tk)

NOTE 1 Min tCKb guaranteed by DRAM test is 18ns.
NOTE 2 The system may boot at a higher frequency than dictated by min tCKb. The higher boot frequency is system dependent.
NOTE 3 tINITVA (Time from stable power, Tb to first valid command, Tk) > = 2.2ms (min). The sequence includes these steps: Reset: tINIT1; Initialization & Calibration: INIT2+ tINIT3 + tINIT4 + tINIT5 + tMRD + tZQCAL + tZQLAT; Training & Access: CBT + Write Leveling + DQ Training.

3.3.2 Reset Initialization with Stable Power

The following sequence is required for RESET at no power interruption initialization.

1. Assert RESET_n below 0.2 x V_{DD2} anytime when reset is needed. RESET_n needs to be maintained for minimum tPW_RESET. CKE must be pulled LOW at least 10 ns before de-asserting RESET_n.
2. Repeat steps 4 to 10 in "Voltage Ramp and Device Initialization" section.

Table 3.5 — Reset Timing Parameter

Parameter	Value		Unit	Comment
	Min	Max		
tPW_RESET	100	-	ns	Minimum RESET_n low Time for Reset Initialization with stable power

3.3.3 Power-off Sequence

The following procedure is required to power off the device.

While powering off, CKE must be held LOW (≤0.2 X V_{DD2}) and all other inputs must be between VILmin and VIHmax. The device outputs remain at High-Z while CKE is held LOW. DQ, DMI, DQS_t and DQS_c voltage levels must be between V_{SSQ} and V_{DDQ} during voltage ramp to avoid latch-up. RESET_n, CK_t, CK_c, CS and CA input levels must be between V_{SS} and V_{DD2} during voltage ramp to avoid latch-up.

Tx is the point where any power supply drops below the minimum value specified.
Tz is the point where all power supplies are below 300mV. After TZ, the device is powered off.

Table 3.6 — Power Supply Conditions

After	Applicable Conditions
Tx and Tz	V_{DD1} must be greater than V_{DD2}
	V_{DD2} must be greater than V_{DDQ} - 200 mV

The voltage difference between any of V_{SS}, V_{SSQ} pins must not exceed 100 mV.

3.3.4 Uncontrolled Power-Off Sequence

When an uncontrolled power-off occurs, the following conditions must be met:

At Tx, when the power supply drops below the minimum values specified, all power supplies must be turned off and all power supply current capacity must be at zero, except any static charge remaining in the system.

After Tz (the point at which all power supplies first reach 300 mV), the device must power off. During this period the relative voltage between power supplies is uncontrolled. V_{DD1} and V_{DD2} must decrease with a slope lower than 0.5 V/µs between Tx and Tz.

An uncontrolled power-off sequence can occur a maximum of 400 times over the life of the device.

Table 3.7 — Timing Parameters Power Off

Symbol	Value		Unit	Comment
	Min	Max		
tPOFF	-	2	s	Maximum Power-off ramp item

3.4 Mode Register Definition

Table 3.8 shows the mode registers for LPDDR4/LPDDR4X SDRAM. Each register is denoted as "R" if it can be read but not written, "W" if it can be written but not read, and "R/W" if it can be read and written. A Mode Register Read command is used to read a mode register. A Mode Register Write command is used to write a mode register.

Table 3.8 — Mode Register Assignment in LPDDR4/LPDDR4X SDRAM

MR#	OP[7]	OP[6]	OP[5]	OP[4]	OP[3]	OP[2]	OP[1]	OP[0]
0	RFU	RFU	RFU	RZQI		RFU	RFU	Refresh mode
1	RPST	nWR (for AP)			RD-PRE	WR-PRE	BL	
2	WR Lev	WLS	WL			RL		
3	DBI-WR	DBI-RD	PDDS			PPRP	WR PST	PU-CAL
4	TUF	Thermal Offset		PPRE	SR Abort	Refresh Rate		
5	Manufacturer ID							
6	Revision ID-1							
7	Revision ID-2							
8	IO Width		Density				Type	
9	Vendor Specific Test Register							
10	RFU							ZQ-Reset
11	RFU	CA ODT			RFU	DQ ODT		
12	RFU	VR-CA	V_{REF}(CA)					
13	FSP-OP	FSP-WR	DMD	RRO	VRCG	VRO	RPT	CBT
14	RFU	VR(dq)	V_{REF}(DQ)					
15	Lower-Byte Invert Register for DQ Calibration							
16	PASR Bank Mask							
17	PASR Segment Mask							
18	DQS Oscillator Count - LSB							
19	DQS Oscillator Count - MSB							
20	Upper-Byte Invert Register for DQ Calibration							
21	RFU							
22	RFU		ODTD-CA	ODTE-CS	ODTE-CK	CODT		
23	DQS interval timer run time setting							
24	TRR Mode	TRR Mode BAn			Unlimited MAC	MAC Value		
25	PPR Resource							
26	RFU							
27	RFU							
28	RFU							
29	RFU							
30	RFU							
31	RFU							
32	DQ Calibration Pattern “A” (default = 5AH)							
33	RFU							
34	RFU							
35	RFU							
36	RFU							
37	RFU							
38	RFU							
39	RFU							
40	DQ Calibration Pattern “B” (default = 3CH)							

3.4.1 MR0 Register Information (MA [5:0] = 00_H)

OP[7]	OP[6]	OP[5]	OP[4]	OP[3]	OP[2]	OP[1]	OP[0]
RFU	RFU	RFU	RZQI		RFU	RFU	Refresh mode

Function	Register Type	Operand	Data	Notes
Refresh mode	Read-only	OP[0]	0_B : Both legacy and modified refresh mode supported 1_B : Only modified refresh mode supported	5
RZQI (Built-in Self-Test for RZQ)		OP[4:3]	00_B: RZQ Self-Test Not Supported 01_B: ZQ pin may be connected to VSSQ or float 10_B: ZQ-pin may be shorted to VDDQ 11_B: ZQ-pin Self-Test Completed. There is no error condition detected (ZQ-pin is properly connected to VDDQ)	1,2,3, 4

NOTE 1 The value that corresponds to RZQI will be valid after the following sequence:
a. Completion of MPC ZQCAL Start command to either channel.
b. Completion of MPC ZQCAL Latch command to either channel then tZQLAT is satisfied.
The RZQI value will be lost, and invalid after Reset.

NOTE 2 If the ZQ-pin is connected to VSSQ to set default calibration, the MR value for OP[4:3], shall be set to 01_B. If the ZQ-pin is not connected to VSSQ, the output of either OP[4:3] = 01_B or OP[4:3] = 10_B might indicate a ZQ-pin assembly error. It is recommended that the assembly error be corrected.

NOTE 3 In the case of a possible assembly error, the LPDDR4-SDRAM device will default to factory trim settings for RON, and will ignore ZQ Calibration commands. In either case, the device may not function as intended.

NOTE 4 If ZQ Self-Test returns OP[4:3] = 11_B, the device has detected a resistor connected to the ZQ-pin. However, this result cannot be used to validate the value of the ZQ resistor or that the ZQ resistor tolerance meets the specified limits (i.e., 240Ω ± 1%).

NOTE 5 Device will always output 0_B for OP[0].

3.4.2 MR1 Register Information (MA[5:0] = 01_H)

OP[7]	OP[6]	OP[5]	OP[4]	OP[3]	OP[2]	OP[1]	OP[0]
RPST	nWR (for AP)			RD-PRE	WR-PRE	BL	

Function	Register Type	Operand	Data	Notes
BL (Burst Length)	Write-only	OP[1:0]	00_B: BL=16 Sequential (default) 01_B: BL=32 Sequential 10_B: BL=16 or 32 Sequential (on-the-fly) All Others: Reserved	1,5,6
WR-PRE (WR Pre-amble Length)		OP[2]	0_B: Reserved 1_B: WR Pre-amble = 2*tCK	5,6
RD-PRE (RD Pre-amble Type)		OP[3]	0_B: RD Pre-amble = Static (default) 1_B: RD Pre-amble = Toggle	3,5,6
nWR (Write-Recovery for Auto-Pre-charge commands)		OP[6:4]	000_B: nWR = 6 (default) 001_B: nWR = 10 010_B: nWR = 16 011_B: nWR = 20 100_B: nWR = 24 101_B: nWR = 30 110_B: nWR = 34 111_B: nWR = 40	2,5,6
RPST (RD Post-Amble Length)		OP[7]	0_B: RD Post-amble = 0.5*tCK (default) 1_B: RD Post-amble = 1.5*tCK	4,5,6

Notes:

1. Burst length on-the-fly can be set to either BL=16 or BL=32 by setting the “BL” bit in the command operands. See Table 3.81.
2. The programmed value of nWR is the number of clock cycles the LPDDR4-SDRAM device uses to determine the starting point of an internal Pre-charge operation after a Write burst with AP (auto-pre-charge) enabled. (Ref. See Latency Code Frequency Table for allowable Frequency Ranges for RL/WL/nWR, available in next revision of this document.[1])
3. For Read operations this bit must be set to select between a "toggling" preamble and a "Non-toggling" Preamble. See 4.5, Read Preamble and Postamble, for a drawing of each type of preamble.
4. OP[7] provides an optional READ post-amble with an additional rising and falling edge of DQS_t. The optional postamble cycle is provided for the benefit of certain memory controllers.
5. There are two physical registers assigned to each bit of this MR parameter, designated set point 0 and set point 1. Only the registers for the set point determined by the state of the FSP-WR bit (MR13 OP[6]) will be written to with an MRW command to this MR address, or read from with an MRR command to this address.
6. There are two physical registers assigned to each bit of this MR parameter, designated set point 0 and set point 1. The device will operate only according to the values stored in the registers for the active set point, i.e., the set point determined by the state of the FSP-OP bit (MR13 OP[7]). The values in the registers for the inactive set point will be ignored by the device, and may be changed without affecting device operation.

Table 3.09 — Burst Sequence for READ

Burst Length	Burst Type	C4	C3	C2	C1	C0	Burst Cycle Number and Burst Address Sequence																																		
							1	2	3	4	5	6	7	8	9	10	11	12	13	14	15	16	17	18	19	20	21	22	23	24	25	26	27	28	29	30	31	32
16	SEQ	V	0	0	0	0	0	1		3	4	5	6	7	8	9	A	B	C	D	E	F																
		V	0	1	0	0	4	5		7	8	9	A	B	C	D	E	F	0	1	2	3																
		V	1	0	0	0	8	9	A	B	C	D	E	F	0	1		3	4	5	6	7																
		V	1	1	0	0	C	D	E	F	0	1	2	3	4	5		7	8	9	A	B																
32	SEQ	0	0	0	0	0	0	1	2	3	4	5	6	7	8	9	A	B	C	D	E	F	10	11	12	13	14	15	16	17	18	19	1A	1B	1C	1D	1E	1F
		0	0	1	0	0	4	5	6	7	8	9	A	B	C	D	E	F	0	1	2	3	14	15	16	17	18	19	1A	1B	1C	1D	1E	1F	10	11	12	13
		0	1	0	0	0	8	9	A	B	C	D	E	F	0	1	2	3	4	5	6	7	18	19	1A	1B	1C	1D	1E	1F	10	11	12	13	14	15	16	17
		0	1	1	0	0	C	D	E	F	0	1	2	3	4	5	6	7	8	9	A	B	1C	1D	1E	1F	10	11	12	13	14	15	16	17	18	19	1A	1B
		1	0	0	0	0	10	11	12	13	14	15	16	17	18	19	1A	1B	1C	1D	1E	1F	0	1	2	3	4	5	6	7	8	9	A	B	C	D	E	F
		1	0	1	0	0	14	15	16	17	18	19	1A	1B	1C	1D	1E	1F	10	11	12	13	4	5	6	7	8	9	A	B	C	D	E	F	0	1	2	3
		1	1	0	0	0	18	19	1A	1B	1C	1D	1E	1F	10	11	12	13	14	15	16	17	8	9	A	B	C	D	E	F	0	1	2	3	4	5	6	7
		1	1	1	0	0	1C	1D	1E	1F	10	11	12	13	14	15	16	17	18	19	1A	1B	C	D	E	F	0	1	2	3	4	5	6	7	8	9	A	B

Notes:
1. C0-C1 are assumed to be '0', and are not transmitted on the command bus.
2. The starting burst address is on 64-bit (4n) boundaries.

Table 3.10 — Burst Sequence for Write

Burst Length	Burst Type	C4	C3	C2	C1	C0	Burst Cycle Number and Burst Address Sequence																																		
							1	2	3	4	5	6	7	8	9	10	11	12	13	14	15	16	17	18	19	20	21	22	23	24	25	26	27	28	29	30	31	32
16	SEQ	V	0	0	0	0	0	1		3	4	5	6	7	8	9	A	B	C	D	E	F																
32	SEQ	0	0	0	0	0	0	1	2	3	4	5	6	7	8	9	A	B	C	D	E	F	10	11	12	13	14	15	16	17	18	19	1A	1B	1C	1D	1E	1F

Notes:
1. C0-C1 are assumed to be '0', and are not transmitted on the command bus.
2. The starting burst address is on 64-bit (4n) boundaries.
3. C2-C3 shall be set to '0' for all Write operations.

3.4.3 MR2 Register Information (MA[5:0] = 02_H)

OP[7]	OP[6]	OP[5]	OP[4]	OP[3]	OP[2]	OP[1]	OP[0]
WR Lev	WLS	WL			RL		

Function	Register Type	Operand	Data	Notes
RL (Read latency)	Write-only	OP[2:0]	RL & nRTP for DBI-RD Disabled (MR3 OP[6]=0_B) 000_B: RL=6, nRTP = 8 (Default) 001_B: RL=10, nRTP = 8 010_B: RL=14, nRTP = 8 011_B: RL=20, nRTP = 8 100_B: RL=24, nRTP = 10 101_B: RL=28, nRTP = 12 110_B: RL=32, nRTP = 14 111_B: RL=36, nRTP = 16 RL & nRTP for DBI-RD Enabled (MR3 OP[6]=1_B) 000_B: RL=6, nRTP = 8 001_B: RL=12, nRTP = 8 010_B: RL=16, nRTP = 8 011_B: RL=22, nRTP = 8 100_B: RL=28, nRTP = 10 101_B: RL=32, nRTP = 12 110_B: RL=36, nRTP = 14 111_B: RL=40, nRTP = 16	1,3,4
WL (Write latency)		OP[5:3]	WL Set "A" (MR2 OP[6]=0_B) 000_B: WL=4 (Default) 001_B: WL=6 010_B: WL=8 011_B: WL=10 100_B: WL=12 101_B: WL=14 110_B: WL=16 111_B: WL=18 WL Set "B" (MR2 OP[6]=1_B) 000_B: WL=4 001_B: WL=8 010_B: WL=12 011_B: WL=18 100_B: WL=22 101_B: WL=26 110_B: WL=30 111_B: WL=34	1,3,4
WLS (Write Latency Set)		OP[6]	0_B: WL Set "A" (default) 1_B: WL Set "B"	1,3,4
WR LEV (Write Leveling)		OP[7]	0_B: Disabled (default) 1_B: Enabled	2

Notes:

1. (Ref. See Latency Code Frequency Table for allowable Frequency Ranges for RL/WL/nWR/nRTP, available in next revision of this document).
2. After a MRW to set the Write Leveling Enable bit (OP[7]=1B), the device remains in the MRW state until another MRW command clears the bit (OP[7]=0B). No other commands are allowed until the Write Leveling Enable bit is cleared.
3. There are two physical registers assigned to each bit of this MR parameter, designated set point 0 and set point 1. Only the registers for the set point determined by the state of the FSP-WR bit (MR13 OP[6]) will be written to with an MRW command to this MR address, or read from with an MRR command to this address.
4. There are two physical registers assigned to each bit of this MR parameter, designated set point 0 and set point 1. The device will operate only according to the values stored in the registers for the active set point, i.e., the set point determined by the state of the FSP-OP bit (MR13 OP[7]). The values in the registers for the inactive set point will be ignored by the device, and may be changed without affecting device operation.

Table 3.11: Frequency Ranges for RL, WL, *n*WR, and *n*RTP Settings

READ Latency		WRITE Latency				Lower Frequency Limit (>)	Upper Frequency Limit(≤)	Units	Notes
No DBI	w/DBI	Set A	Set B	*n*WR	*n*RTP				
6	6	4	4	6	8	10	266	MHz	1–7
10	12	6	8	10	8	266	533		
14	16	8	12	16	8	533	800		
20	22	10	18	20	8	800	1066		
24	28	12	22	24	10	1066	1333		
28	32	14	26	30	12	1333	1600		
32	36	16	30	34	14	1600	1866		
36	40	18	34	40	16	1866	2133		

Notes:

1. The device should not be operated at a frequency above the upper frequency limit or below the lower frequency limit shown for each RL, WL, or *n*WR value.
2. DBI for READ operations is enabled in MR3 OP[6]. When MR3 OP[6] = 0, then the "No DBI" column should be used for READ latency. When MR3 OP[6] = 1, then the "w/DBI" column should be used for READ latency.
3. WRITE latency set A and set B are determined by MR2 OP[6]. When MR2 OP[6] = 0, then WRITE latency set A should be used. When MR2 OP[6] = 1, then WRITE latency set B should be used.
4. The programmed value for *n*RTP is the number of clock cycles the device uses to determine the starting point of an internal PRECHARGE operation after a READ burst with AP (auto precharge) enabled . It is determined by RU(^{t}RTP/^{t}CK).
5. The programmed value of *n*WR is the number of clock cycles the device uses to determine the starting point of an internal PRECHARGE operation after a WRITE burst with AP (auto precharge) enabled. It is determined by RU(^{t}WR/^{t}CK).
6. *n*RTP shown in this table is valid for BL16 only. For BL32, the device will add 8 clocks to the *n*RTP value before starting a precharge.
7. If the operating frequency is between 10MHz and 533MHz, it is required that Write Latency ≥ 8 during ODTLon or ODTLoff transitions.

3.4.4 MR3 Register Information (MA[5:0] = 03_H)

OP[7]	OP[6]	OP[5]	OP[4]	OP[3]	OP[2]	OP[1]	OP[0]
DBI-WR	DBI-RD	PDDS			PPRP	WR PST	PU-CAL

Function	Register Type	Operand	Data	Notes
PU-Cal (LPDDR4) (Pull-up Calibration Point)	Write-only	OP[0]	0_B: V_{DDQ}/2.5 1_B: V_{DDQ}/3 (default)	1,4
PU-Cal (LPDDR4X) (Pull-up Calibration Point)		OP[0]	0_B: V_{DDQ} x 0.6 1_B: V_{DDQ} x 0.5 (default)	1,4
WR PST(WR Post-Amble Length)		OP[1]	0_B: WR Post-amble = 0.5*tCK (default) 1_B: WR Post-amble = 1.5*tCK(Vendor specific function)	2,3,5
Post Package Repair Protection		OP[2]	0_B: PPR protection disabled (default) 1_B: PPR protection enabled	6
PDDS (Pull-Down Drive Strength)		OP[5:3]	000_B: RFU 001_B: RZQ/1 010_B: RZQ/2 011_B: RZQ/3 100_B: RZQ/4 101_B: RZQ/5 110_B: RZQ/6 (default) 111_B: Reserved	1,2,3
DBI-RD (DBI-Read Enable)		OP[6]	0_B: Disabled (default) 1_B: Enabled	2,3
DBI-WR (DBI-Write Enable)		OP[7]	0_B: Disabled (default) 1_B: Enabled	2,3

Notes:
1. All values are "typical". The actual value after calibration will be within the specified tolerance for a given voltage and temperature. Re-calibration may be required as voltage and temperature vary.
2. There are two physical registers assigned to each bit of this MR parameter, designated set point 0 and set point 1. Only the registers for the set point determined by the state of the FSP-WR bit (MR13 OP[6]) will be written to with an MRW command to this MR address, or read from with an MRR command to this address.
3. There are two physical registers assigned to each bit of this MR parameter, designated set point 0 and set point 1. The device will operate only according to the values stored in the registers for the active set point, i.e., the set point determined by the state of the FSP-OP bit (MR13 OP[7]). The values in the registers for the inactive set point will be ignored by the device, and may be changed without affecting device operation.
4. For Dual-Channel devices, PU-CAL setting is required as the same value for both Ch.A and Ch.B before issuing ZQ Cal start command.
5. Refer to the supplier data sheet for vendor specific function. 1.5*tCK apply > 1.6GHz clock.
6. If MR3 OP[2] is set to 1b then PPR protection mode is enabled. The PPR Protection bit is a sticky bit and can only be set to 0b by a power on reset. MR4 OP[4] controls entry to PPR Mode. If PPR protection is enabled then DRAM will not allow writing of 1 to MR4 OP[4].

3.4.5 MR4 Register Information (MA[5:0] = 04_H)

OP[7]	OP[6]	OP[5]	OP[4]	OP[3]	OP[2]	OP[1]	OP[0]
TUF	Thermal Offset		PPRE	RFU	Refresh Rate		

Function	Register Type	Operand	Data	Notes
Refresh Rate	Read	OP[2:0]	000_B: SDRAM Low temperature operating limit exceeded 001_B: 4x refresh 010_B: 2x refresh 011_B: 1x refresh (default) 100_B: 0.5x refresh 101_B: 0.25x refresh, no de-rating 110_B: 0.25x refresh, with de-rating 111_B: SDRAM High temperature operating limit exceeded	1,2,3,4, 7,8,9
PPRE (Post-package repair entry/exit)	Write	OP[4]	0_B: Exit PPR mode (default) 1_B: Enter PPR mode	5,9
Thermal Offset	Write	OP[6:5]	00_B: No offset, 0~5°C gradient (default) 01_B: 5°C offset, 5~10°C gradient 10_B: 10°C offset, 10~15°C gradient 11_B: Reserved	9,10
TUF (Temperature Update Flag)	Read	OP[7]	0_B: No change in OP[2:0] since last MR4 read (default) 1_B: Change in OP[2:0] since last MR4 read	6,7,8,9

1. The refresh rate for each MR4-OP[2:0] setting applies to tREFI, tREFIpb, and tREFW. OP[2:0]=011_B corresponds to a device temperature of 85°C. Other values require either a longer (2x, 4x) refresh interval at lower temperatures, or a shorter (0.5x, 0.25x) refresh interval at higher temperatures. If OP[2]=1_B, the device temperature is greater than 85 °C.
2. At higher temperatures (>85 °C), AC timing derating may be required. If derating is required the LPDDR4-SDRAM will set OP[2:0]=110_B. See derating timing requirements in Table 10.3.
3. DRAM vendors may or may not report all of the possible settings over the operating temperature range of the device. Each vendor guarantees that their device will work at any temperature within the range using the refresh interval requested by their device.
4. The device may not operate properly when OP[2:0]=000_B or 111_B.
5. Post-package repair can be entered or exited by writing to OP[4].
6. When OP[7]=1, the refresh rate reported in OP[2:0] has changed since the last MR4 read. A mode register read from MR4 will reset OP[7] to '0'.
7. OP[7]=0 at power-up. OP[2:0] bits are undefined at power-up.
8. See the section on "Temperature Sensor" for information on the recommended frequency of reading MR4.
9. OP[6:4] bits that can be written in this register. All other bits will be ignored by the DRAM during a MRW to this register.
10. Refer to section 4.33.

3.4.6 MR5 Register Information (MA[5:0] = 05_H)

OP[7]	OP[6]	OP[5]	OP[4]	OP[3]	OP[2]	OP[1]	OP[0]
LPDDR4 Manufacturer ID							

Function	Register Type	Operand	Data	Notes
LPDDR4 Manufacturer ID	Read-only	OP[7:0]	$1B_H$ (00011011_B)	

3.4.7 MR6 Register Information (MA[5:0] = 06_H)

OP[7]	OP[6]	OP[5]	OP[4]	OP[3]	OP[2]	OP[1]	OP[0]
Revision ID-1							

Function	Register Type	Operand	Data	Notes
LPDDR4 Revision ID-1	Read-only	OP[7:0]	00000000_B: A-version 00000001_B: B-version	1

Notes:
1. MR6 is vendor specific.

3.4.8 MR7 Register Information (MA[5:0] = 07_H)

OP[7]	OP[6]	OP[5]	OP[4]	OP[3]	OP[2]	OP[1]	OP[0]
Revision ID-2							

Function	Register Type	Operand	Data	Notes
LPDDR4 Revision ID-2	Read-only	OP[7:0]	00000000_B: A-version 00000001_B: B-version	1

Notes:
1. MR7 is vendor specific.

3.4.9 MR8 Register Information (MA[5:0] = 08_H)

OP[7]	OP[6]	OP[5]	OP[4]	OP[3]	OP[2]	OP[1]	OP[0]
IO Width		Density				Type	

Function	Register Type	Operand	Data	Notes
Type	Read-only	OP[1:0]	00_B: S16 SDRAM (16n pre-fetch) All Others: Reserved	
Density		OP[5:2]	0000_B: 4Gb dual channel/2Gb single channel 0001_B: 6Gb dual channel/3Gb single channel 0010_B: 8Gb dual channel/4Gb single channel 0011_B: 12Gb dual channel/6Gb single channel 0100_B: 16Gb dual channel/8Gb single channel 0101_B: 24Gb dual channel/12Gb single channel 0110_B: 32Gb dual channel/16Gb single channel 1100_B: 2Gb dual channel/1Gb single channel All Others: Reserved	
IO Width		OP[7:6]	00_B: x16 (per channel) All Others: Reserved	

3.4.10 MR9 Register Information (MA[5:0] = 09_H)

OP[7]	OP[6]	OP[5]	OP[4]	OP[3]	OP[2]	OP[1]	OP[0]
Vendor Specific Test Register							

Notes:
1. Only 00_H should be written to this register.

3.4.11 MR10 Register Information (MA[5:0] = $0A_H$)

OP[7]	OP[6]	OP[5]	OP[4]	OP[3]	OP[2]	OP[1]	OP[0]
RFU							ZQ-Reset

Function	Register Type	Operand	Data	Notes
ZQ-Reset	Write-only	OP[0]	0_B: Normal Operation (Default) 1_B: ZQ Reset	1,2

Notes:
1. See Table 4.52, ZQCal Timing Parameters for calibration latency and timing.
2. If the ZQ-pin is connected to V_{DDQ} through R_{ZQ}, either the ZQ calibration function or default calibration (via ZQ-Reset) is supported. If the ZQ-pin is connected to V_{SS}, the device operates with default calibration, and ZQ calibration commands are ignored. In both cases, the ZQ connection shall not change after power is applied to the device.

3.4.12 MR11 Register Information (MA[5:0] = $0B_H$)

OP[7]	OP[6]	OP[5]	OP[4]	OP[3]	OP[2]	OP[1]	OP[0]
RFU	CA ODT			RFU	DQ ODT		

Function	Register Type	Operand	Data	Notes
DQ ODT (DQ Bus Receiver On-Die-Termination)	Write-only	OP[2:0]	000_B: Disable (Default) 001_B: RZQ/1 010_B: RZQ/2 011_B: RZQ/3 100_B: RZQ/4 101_B: RZQ/5 110_B: RZQ/6 111_B: RFU	1,2,3
CA ODT (CA Bus Receiver On-Die-Termination)		OP[6:4]	000_B: Disable (Default) 001_B: RZQ/1 010_B: RZQ/2 011_B: RZQ/3 100_B: RZQ/4 101_B: RZQ/5 110_B: RZQ/6 111_B: RFU	1,2,3

Notes:

1. All values are "typical". The actual value after calibration will be within the specified tolerance for a given voltage and temperature. Re-calibration may be required as voltage and temperature vary.
2. There are two physical registers assigned to each bit of this MR parameter, designated set point 0 and set point 1. Only the registers for the set point determined by the state of the FSP-WR bit (MR13 OP[6]) will be written to with an MRW command to this MR address, or read from with an MRR command to this address.
3. There are two physical registers assigned to each bit of this MR parameter, designated set point 0 and set point 1. The device will operate only according to the values stored in the registers for the active set point, i.e., the set point determined by the state of the FSP-OP bit (MR13 OP[7]). The values in the registers for the inactive set point will be ignored by the device, and may be changed without affecting device operation.

3.4.13 MR12 Register Information (MA[5:0] = $0C_H$)

OP[7]	OP[6]	OP[5]	OP[4]	OP[3]	OP[2]	OP[1]	OP[0]
RFU	VR-CA	V_{REF}(CA)					

Function	Register Type	Operand	Data	Notes
V_{REF}(CA) (V_{REF}(CA) Setting)	Read/ Write	OP[5:0]	000000_B: -- Thru -- 110010_B: See table below All Others: Reserved	1,2,3, 5,6
VR-CA (V_{REF}(CA) Range)		OP[6]	0_B: V_{REF}(CA) Range[0] enabled 1_B: V_{REF}(CA) Range[1] enabled (default)	1,2,4, 5,6

Notes:

1. This register controls the V_{REF}(CA) levels for Frequency-Set-Point[1:0]. Values from either VR(ca)[0] or VR(ca)[1] may be selected by setting OP[6] appropriately.
2. A read to this register places the contents of OP[7:0] on DQ[7:0]. Any RFU bits and unused DQ's shall be set to '0'. See the section on MRR Operation.
3. A write to OP[5:0] sets the internal V_{REF}(CA) level for FSP[0] when MR13 OP[6]=0_B, or sets FSP[1] when MR13 OP[6]=1_B. The time required for V_{REF}(CA) to reach the set level depends on the step size from the current level to the new level. See the section on V_{REF}(CA) training for more information.
4. A write to OP[6] switches the LPDDR4-SDRAM between two internal V_{REF}(CA) ranges. The range (Range[0] or Range[1]) must be selected when setting the V_{REF}(CA) register. The value, once set, will be retained until overwritten, or until the next power-on or RESET event.
5. There are two physical registers assigned to each bit of this MR parameter, designated set point 0 and set point 1. Only the registers for the set point determined by the state of the FSP-WR bit (MR13 OP[6]) will be written to with an MRW command to this MR address, or read from with an MRR command to this address.
6. There are two physical registers assigned to each bit of this MR parameter, designated set point 0 and set point 1. The device will operate only according to the values stored in the registers for the active set point, i.e., the set point determined by the state of the FSP-OP bit (MR13 OP[7]). The values in the registers for the inactive set point will be ignored by the device, and may be changed without affecting device operation.

3.4.14 MR13 Register Information (MA [5:0] = $0D_H$)

OP[7]	OP[6]	OP[5]	OP[4]	OP[3]	OP[2]	OP[1]	OP[0]
FSP-OP	FSP-WR	DMD	RRO	VRCG	VRO	RPT	CBT

Function	Register Type	Operand	Data	Notes
CBT (Command Bus Training)	Write-only	OP[0]	0_B: Normal Operation (default) 1_B: Command Bus Training Mode Enabled	1
RPT (Read Preamble Training Mode)		OP[1]	0_B : Disable (default) 1_B : Enable	
VRO (V_{REF} Output)		OP[2]	0_B: Normal operation (default) 1_B: Output the V_{REF}(CA) and V_{REF}(DQ) values on DQ bits	2
VRCG (V_{REF} Current Generator)		OP[3]	0_B: Normal Operation (default) 1_B: V_{REF} Fast Response (high current) mode	3
RRO Refresh rate option		OP[4]	0_B: Disable codes 001 and 010 in MR4 OP[2:0] 1_B: Enable all codes in MR4 OP[2:0]	4, 5
DMD (Data Mask Disable)		OP[5]	0_B: Data Mask Operation Enabled (default) 1_B: Data Mask Operation Disabled	6
FSP-WR (Frequency Set Point Write Enable)		OP[6]	0_B: Frequency-Set-Point[0] (default) 1_B: Frequency-Set-Point [1]	7
FSP-OP (Frequency Set Point Operation Mode)		OP[7]	0_B: Frequency-Set-Point[0] (default) 1_B: Frequency-Set-Point [1]	8

Notes:

1. A write to set OP[0]=1 causes the LPDDR4-SDRAM to enter the Command Bus Training mode. When OP[0]=1 and CKE goes LOW, commands are ignored and the contents of CA[5:0] are mapped to the DQ bus. CKE must be brought HIGH before doing a MRW to clear this bit (OP[0]=0) and return to normal operation. See the Command Bus Training section for more information.
2. When set, the LPDDR4-SDRAM will output the V_{REF}(CA) and V_{REF}(DQ) voltages on DQ pins. Only the "active"frequency-set-point, as defined by MR13 OP[7], will be output on the DQ pins. This function allows an external test system to measure the internal V_{REF} levels. The DQ pins used for V_{REF} output are vendor specific.
3. When OP[3]=1, the V_{REF} circuit uses a high-current mode to improve V_{REF} settling time.
4. MR13 OP4 RRO bit is valid only when MR0 OP0 = 1. For LPDDR4 devices with MR0 OP0 = 0, MR4 OP[2:0] bits are not dependent on MR13 OP4.
5. When OP[4] = 0, only 001b and 010b in MR4 OP[2:0] are disabled. LPDDR4 devices must report 011b instead of 001b or 010b in this case. Controller should follow the refresh mode reported by MR4 OP[2:0], regardless of RRO setting. TCSR function does not depend on RRO setting.
6. When enabled (OP[5]=0B) data masking is enabled for the device. When disabled (OP[5]=1B), masked write command is illegal. See 4.15, LPDDR4 Data Mask (DM) and Data Bus Inversion (DBIdc) Function.
7. FSP-WR determines which frequency-set-point registers are accessed with MRW commands for the following functions such as V_{REF}(CA) Setting, V_{REF}(CA) Range, V_{REF}(DQ) Setting, V_{REF}(DQ) Range. For more information, refer to 4.26, Frequency Set Point.
8. FSP-OP determines which frequency-set-point register values are currently used to specify device operation for the following functions such as V_{REF}(CA) Setting, V_{REF}(CA) Range, V_{REF}(DQ) Setting, V_{REF}(DQ) Range. For

3.4.15 MR14 Register Information (MA[5:0] = $0E_H$)

OP[7]	OP[6]	OP[5]	OP[4]	OP[3]	OP[2]	OP[1]	OP[0]
RFU	VR(DQ)	V_{REF}(DQ)					

Function	Register Type	Operand	Data	Notes
V_{REF}(DQ) (V_{REF}(DQ) Setting)	Read/ Write	OP[5:0]	000000_B: -- Thru -- 110010_B: See V_{REF} Settings table All Others: Reserved	1,2,3, 5,6
VR(dq) (V_{REF}(DQ) Range)		OP[6]	0_B: V_{REF}(DQ) Range[0] enabled 1_B: V_{REF}(DQ) Range[1] enabled (default)	1,2,4, 5,6

Notes:

1. This register controls the V_{REF}(DQ) levels for Frequency-Set-Point[1:0]. Values from either VR(DQ)[0] or VR(dq)[1] may be selected by setting OP[6] appropriately.
2. A read (MRR) to this register places the contents of OP[7:0] on DQ[7:0]. Any RFU bits and unused DQ's shall be set to'0'. See the section on MRR Operation.
3. A write to OP[5:0] sets the internal V_{REF}(DQ) level for FSP[0] when MR13 OP[6]=0B, or sets FSP[1] when MR13 OP[6]=1B. The time required for V_{REF}(DQ) to reach the set level depends on the step size from the current level to the new level. See the section on V_{REF}(DQ) training for more information.
4. A write to OP[6] switches the device between two internal V_{REF}(DQ) ranges. The range (Range[0] or Range[1]) must be selected when setting the V_{REF}(DQ) register. The value, once set, will be retained until overwritten, or until the next power-on or RESET event.
5. There are two physical registers assigned to each bit of this MR parameter, designated set point 0 and set point 1. Only the registers for the set point determined by the state of the FSP-WR bit (MR13 OP[6]) will be written to with an MRW command to this MR address, or read from with an MRR command to this address.
6. There are two physical registers assigned to each bit of this MR parameter, designated set point 0 and set point 1. The device will operate only according to the values stored in the registers for the active set point, i.e., the set point determined by the state of the FSP-OP bit (MR13 OP[7]). The values in the registers for the inactive set point will be ignored by the device, and may be changed without affecting device operation.

Table 3.12(a) — V_{REF} Settings for Range[0] and Range[1] for LPDDR4

Function	Operand	Range[0] Values $V_{REF(CA)}$ (% of V_{DD2}) $V_{REF(DQ)}$ (% of V_{DDQ})		Range[1] Values $V_{REF(CA)}$ (% of V_{DD2}) $V_{REF(DQ)}$ (% of V_{DDQ})		Notes
V_{REF} Settings for MR12 and MR14	OP[5:0]	000000_B: 10.0%	011010_B: 20.4%	000000_B: 22.0%	011010_B: 32.4%	1,2,3
		000001_B: 10.4%	011011_B: 20.8%	000001_B: 22.4%	011011_B: 32.8%	
		000010_B: 10.8%	011100_B: 21.2%	000010_B: 22.8%	011100_B: 33.2%	
		000011_B: 11.2%	011101_B: 21.6%	000011_B: 23.2%	011101_B: 33.6%	
		000100_B: 11.6%	011110_B: 22.0%	000100_B: 23.6%	011110_B: 34.0%	
		000101_B: 12.0%	011111_B: 22.4%	000101_B: 24.0%	011111_B: 34.4%	
		000110_B: 12.4%	100000_B: 22.8%	000110_B: 24.4%	100000_B: 34.8%	
		000111_B: 12.8%	100001_B: 23.2%	000111_B: 24.8%	100001_B: 35.2%	
		001000_B: 13.2%	100010_B: 23.6%	001000_B: 25.2%	100010_B: 35.6%	
		001001_B: 13.6%	100011_B: 24.0%	001001_B: 25.6%	100011_B: 36.0%	
		001010_B: 14.0%	100100_B: 24.4%	001010_B: 26.0%	100100_B: 36.4%	
		001011_B: 14.4%	100101_B: 24.8%	001011_B: 26.4%	100101_B: 36.8%	
		001100_B: 14.8%	100110_B: 25.2%	001100_B: 26.8%	100110_B: 37.2%	
		001101_B: 15.2%	100111_B: 25.6%	001101_B: 27.2% (Default)	100111_B: 37.6%	
		001110_B: 15.6%	101000_B: 26.0%	001110_B: 27.6%	101000_B: 38.0%	
		001111_B: 16.0%	101001_B: 26.4%	001111_B: 28.0%	101001_B: 38.4%	
		010000_B: 16.4%	101010_B: 26.8%	010000_B: 28.4%	101010_B: 38.8%	
		010001_B: 16.8%	101011_B: 27.2%	010001_B: 28.8%	101011_B: 39.2%	
		010010_B: 17.2%	101100_B: 27.6%	010010_B: 29.2%	101100_B: 39.6%	
		010011_B: 17.6%	101101_B: 28.0%	010011_B: 29.6%	101101_B: 40.0%	
		010100_B: 18.0%	101110_B: 28.4%	010100_B: 30.0%	101110_B: 40.4%	
		010101_B: 18.4%	101111_B: 28.8%	010101_B: 30.4%	101111_B: 40.8%	
		010110_B: 18.8%	110000_B: 29.2%	010110_B: 30.8%	110000_B: 41.2%	
		010111_B: 19.2%	110001_B: 29.6%	010111_B: 31.2%	110001_B: 41.6%	
		011000_B: 19.6%	110010_B: 30.0%	011000_B: 31.6%	110010_B: 42.0%	
		011001_B: 20.0%	All Others: Reserved	011001_B: 32.0%	All Others: Reserved	

NOTE 1 These values may be used for MR12 OP[5:0] and MR14 OP[5:0] to set the VREF(CA) or VREF (DQ) levels in the device.
NOTE 2 The range may be selected in the MR12 or MR14 register by setting OP[6] appropriately.
NOTE 3 The MR12 or MR14 registers represents either FSP[0] or FSP[1]. Two frequency-set-points each for CA and DQ are provided to allow for faster switching between terminated and unterminated operation, or between different high-frequency setting which may use different terminations values.

Table 3.12(b) — V_{REF} Settings for Range[0] and Range[1] for LPDDR4X

Function	Operand	Range[0] Values VREF(CA) (% of VDDQ) VREF(DQ) (% of VDDQ)				Range[1] Values VREF(CA) (% of VDDQ) VREF(DQ) (% of VDDQ)				Notes
V_{REF} Settings for MR12 and MR14	OP [5:0]	000000_B:	15.0%	011010_B:	30.5%	000000_B:	32.9%	011010_B:	48.5%	1,2,3
		000001_B:	15.6%	011011_B:	31.1%	000001_B:	33.5%	011011_B:	49.1%	
		000010_B:	16.2%	011100_B:	31.7%	000010_B:	34.1%	011100_B:	49.7%	
		000011_B:	16.8%	011101_B:	32.3%	000011_B:	34.7%	011101_B: default	50.3%	
		000100_B:	17.4%	011110_B:	32.9%	000100_B:	35.3%	011110_B:	50.9%	
		000101_B:	18.0%	011111_B:	33.5%	000101_B:	35.9%	011111_B:	51.5%	
		000110_B:	18.6%	100000_B:	34.1%	000110_B:	36.5%	100000_B:	52.1%	
		000111_B:	19.2%	100001_B:	34.7%	000111_B:	37.1%	100001_B:	52.7%	
		001000_B:	19.8%	100010_B:	35.3%	001000_B:	37.7%	100010_B:	53.3%	
		001001_B:	20.4%	100011_B:	35.9%	001001_B:	38.3%	100011_B:	53.9%	
		001010_B:	21.0%	100100_B:	36.5%	001010_B:	38.9%	100100_B:	54.5%	
		001011_B:	21.6%	100101_B:	37.1%	001011_B:	39.5%	100101_B:	55.1%	
		001100_B:	22.2%	100110_B:	37.7%	001100_B:	40.1%	100110_B:	55.7%	
		001101_B:	22.8%	100111_B:	38.3%	001101_B:	40.7%	100111_B:	56.3%	
		001110_B:	23.4%	101000_B:	38.9%	001110_B:	41.3%	101000_B:	56.9%	
		001111_B:	24.0%	101001_B:	39.5%	001111_B:	41.9%	101001_B:	57.5%	
		010000_B:	24.6%	101010_B:	40.1%	010000_B:	42.5%	101010_B:	58.1%	
		010001_B:	25.1%	101011_B:	40.7%	010001_B:	43.1%	101011_B:	58.7%	
		010010_B:	25.7%	101100_B:	41.3%	010010_B:	43.7%	101100_B:	59.3%	
		010011_B:	26.3%	101101_B:	41.9%	010011_B:	44.3%	101101_B:	59.9%	
		010100_B:	26.9%	101110_B:	42.5%	010100_B:	44.9%	101110_B:	60.5%	
		010101_B:	27.5%	101111_B:	43.1%	010101_B:	45.5%	101111_B:	61.1%	
		010110_B:	28.1%	110000_B:	43.7%	010110_B:	46.1%	110000_B:	61.7%	
		010111_B:	28.7%	110001_B:	44.3%	010111_B:	46.7%	110001_B:	62.3%	
		011000_B:	29.3%	110010_B:	44.9%	011000_B:	47.3%	110010_B:	62.9%	
		011001_B:	29.9%	All Others: Reserved		011001_B:	47.9%	All Others: Reserved		

NOTE 1 These values may be used for MR12 OP[5:0] and MR14 OP[5:0] to set the VREF(CA) or VREF (DQ) levels in the device.
NOTE 2 The range may be selected in the MR12 or MR14 register by setting OP[6] appropriately.
NOTE 3 The MR12 or MR14 registers represents either FSP[0] or FSP[1]. Two frequency-set-points each for CA and DQ are provided to allow for faster switching between terminated and unterminated operation, or between different high-frequency setting which may use different terminations values.

3.4.16 MR15 Register Information (MA[5:0] = $0F_H$)

OP[7]	OP[6]	OP[5]	OP[4]	OP[3]	OP[2]	OP[1]	OP[0]
Lower-Byte Invert Register for DQ Calibration							

Function	Register Type	Operand	Data	Notes
Lower-Byte Invert for DQ Calibration	Write-only	OP[7:0]	The following values may be written for any operand OP[7:0], and will be applied to the corresponding DQ locations DQ[7:0] within a byte lane: 0_B: Do not invert 1_B: Invert the DQ Calibration patterns in MR32 and MR40 Default value for OP[7:0]=55_H	1,2,3

Notes:

1. This register will invert the DQ Calibration pattern found in MR32 and MR40 for any single DQ, or any combination of DQ's. Example: If MR15 OP[7:0]=00010101B, then the DQ Calibration patterns transmitted on DQ[7,6,5,3,1] will not be inverted, but the DQ Calibration patterns transmitted on DQ[4,2,0] will be inverted.
2. DMI[0] is not inverted, and always transmits the “true” data contained in MR32/MR40.
3. No Data Bus Inversion (DBI) function is enacted during DQ Read Calibration, even if DBI is enabled in MR3-OP[6].

Table 3.13 — MR15 Invert Register Pin Mapping

PIN	DQ0	DQ1	DQ2	DQ3	DMI0	DQ4	DQ5	DQ6	DQ7
MR15	OP0	OP1	OP2	OP3	NO-Invert	OP4	OP5	OP6	OP7

3.4.17 MR16 Register Information (MA[5:0] = 10_H)

OP[7]	OP[6]	OP[5]	OP[4]	OP[3]	OP[2]	OP[1]	OP[0]
PASR Bank Mask							

Function	Register Type	Operand	Data	Notes
Bank[7:0] Mask	Write-only	OP[7:0]	0_B: Bank Refresh enabled (default) : Unmasked 1_B: Bank Refresh disabled : Masked	1

OP[n]	Bank Mask	8-Bank SDRAM
0	xxxxxxx1	Bank 0
1	xxxxxx1x	Bank 1
2	xxxxx1xx	Bank 2
3	xxxx1xxx	Bank 3
4	xxx1xxxx	Bank 4
5	xx1xxxxx	Bank 5
6	x1xxxxxx	Bank 6
7	1xxxxxxx	Bank 7

Notes:
1. When a mask bit is asserted (OP[n]=1), refresh to that bank is disabled.
2. PASR bank-masking is on a per-channel basis. The two channels on the die may have different bank masking.

3.4.18 MR17 Register Information (MA[5:0] = 11_H)

OP[7]	OP[6]	OP[5]	OP[4]	OP[3]	OP[2]	OP[1]	OP[0]
PASR Segment Mask							

Function	Register Type	Operand	Data	Notes
PASR Segment Mask	Write-only	OP[7:0]	0_B: Segment Refresh enabled (default) 1_B: Segment Refresh disabled	

Segment	OP[n]	Segment Mask	1Gb	2Gb	3Gb	4Gb	6Gb	8Gb	12Gb	16Gb
			R12:R10	R13:R11	R14:R12	R14:R12	R15:R13	R15:R13	R16:R14	R16:R14
0	0	xxxxxxx1	000_B							
1	1	xxxxxx1x	001_B							
2	2	xxxxx1xx	010_B							
3	3	xxxx1xxx	011_B							
4	4	xxx1xxxx	100_B							
5	5	xx1xxxxx	101_B							
6	6	x1xxxxxx	110_B	110_B	Not Allowed	110_B	Not Allowed	110_B	Not Allowed	110_B
7	7	1xxxxxxx	111_B	111_B		111_B		111_B		111_B

Notes:

1. This table indicates the range of row addresses in each masked segment. "X" is don't care for a particular segment.
2. PASR segment-masking is on a per-channel basis. The two channels on the die may have different segment masking.
3. For 3Gb, 6Gb, and 12Gb densities, OP[7:6] must always be LOW (=00_B).

3.4.19 MR18 Register Information (MA[5:0] = 12_H)

OP[7]	OP[6]	OP[5]	OP[4]	OP[3]	OP[2]	OP[1]	OP[0]
DQS Oscillator Count - LSB							

Function	Register Type	Operand	Data	Notes
DQS Oscillator (WR Training DQS Oscillator)	Read-only	OP[7:0]	0 - 255 LSB DRAM DQS Oscillator Count	1,2,3

Notes:
1. MR18 reports the LSB bits of the DRAM DQS Oscillator count. The DRAM DQS Oscillator count value is used to train DQS to the DQ data valid window. The value reported by the DRAM in this mode register can be used by the memory controller to periodically adjust the phase of DQS relative to DQ.
2. Both MR18 and MR19 must be read (MRR) and combined to get the value of the DQS Oscillator count.
3. A new MPC [Start DQS Oscillator] should be issued to reset the contents of MR18/MR19.

3.4.20 MR19 Register Information (MA[5:0] = 13_H)

OP[7]	OP[6]	OP[5]	OP[4]	OP[3]	OP[2]	OP[1]	OP[0]
DQS Oscillator Count - MSB							

Function	Register Type	Operand	Data	Notes
DQS Oscillator (WR Training DQS Oscillator)	Read-only	OP[7:0]	0-255 MSB DRAM DQS Oscillator Count	1,2,3

Notes:
1. MR19 reports the MSB bits of the DRAM DQS Oscillator count. The DRAM DQS Oscillator count value is used to train DQS to the DQ data valid window. The value reported by the DRAM in this mode register can be used by the memory controller to periodically adjust the phase of DQS relative to DQ.
2. Both MR18 and MR19 must be read (MRR) and combined to get the value of the DQS Oscillator count.
3. A new MPC [Start DQS Oscillator] should be issued to reset the contents of MR18/MR19.

3.4.21 MR20 Register Information (MA[5:0] = 14_H)

OP[7]	OP[6]	OP[5]	OP[4]	OP[3]	OP[2]	OP[1]	OP[0]
Upper-Byte Invert Register for DQ Calibration							

Function	Register Type	Operand	Data	Notes
Upper-Byte Invert for DQ Calibration	Write-only	OP[7:0]	The following values may be written for any operand OP[7:0], and will be applied to the corresponding DQ locations DQ[15:8] within a byte lane: 0_B: Do not invert 1_B: Invert the DQ Calibration patterns in MR32 and MR40 Default value for OP[7:0] = 55_H	1,2

Notes:

1. This register will invert the DQ Calibration pattern found in MR32 and MR40 for any single DQ, or any combination of DQ's. Example: If MR20 OP[7:0]=00010101B, then the DQ Calibration patterns transmitted on DQ[15,14,13,11,9] will not be inverted, but the DQ Calibration patterns transmitted on DQ[12,10,8] will be inverted.
2. DMI[1] is not inverted, and always transmits the "true" data contained in MR32/MR40.
3. No Data Bus Inversion (DBI) function is enacted during DQ Read Calibration, even if DBI is enabled in MR3-OP[6].

Table 3.14 — MR20 Invert Register Pin Mapping

PIN	DQ8	DQ9	DQ10	DQ11	DMI1	DQ12	DQ13	DQ14	DQ15
MR20	OP0	OP1	OP2	OP3	NO-Invert	OP4	OP5	OP6	OP7

3.4.22 MR22 Register Information (MA[5:0] = 16_H)

OP[7]	OP[6]	OP[5]	OP[4]	OP[3]	OP[2]	OP[1]	OP[0]
RFU		ODTD-CA	ODTE-CS	ODTE-CK	SOC ODT		

MR22 Register Information for LPDDR4

Function	Register Type	Operand	Data	Notes
SoC ODT (Controller ODT Value for VOH calibration)	Write-only	OP[2:0]	000_B: Disable (Default) 001_B: RZQ/1 010_B: RZQ/2 011_B: RZQ/3 100_B: RZQ/4 101_B: RZQ/5 110_B: RZQ/6 111_B: RFU	1,2,3
ODTE-CK (CK ODT enabled for nonterminating rank)		OP[3]	0_B: ODT-CK Over-ride Disabled (Default) 1_B: ODT-CK Over-ride Enabled	2,3,4, 6,8
ODTE-CS (CS ODT enable for non terminating rank)		OP[4]	0B: ODT-CS Over-ride Disabled (Default) 1B: ODT-CS Over-ride Enabled	2,3,5, 6,8
ODTD-CA (CA ODT termination disable)		OP[5]	0_B: ODT-CA Obeys ODT_CA bond pad (default) 1_B: ODT-CA Disabled	2,3,6, 7,8

1. All values are “typical".
2. There are two physical registers assigned to each bit of this MR parameter, designated set point 0 and set point 1. Only the registers for the set point determined by the state of the FSP-WR bit (MR13 OP[6]) will be written to with an MRW command to this MR address, or read from with an MRR command to this address.
3. There are two physical registers assigned to each bit of this MR parameter, designated set point 0 and set point 1. The device will operate only according to the values stored in the registers for the active set point, i.e., the set point determined by the state of the FSP-OP bit (MR13 OP[7]). The values in the registers for the inactive set point will be ignored by the device, and may be changed without affecting device operation.
4. When OP[3]=1, then the CK signals will be terminated to the value set by MR11-OP[6:4] regardless of the state of the ODT_CA bond pad. This overrides the ODT_CA bond pad for configurations where CA is shared by two or more DRAMs but CK is not, allowing CK to terminate on all DRAMs.
5. When OP[4]=1, then the CS signal will be terminated to the value set by MR11-OP[6:4] regardless of the state of the ODT_CA bond pad. This overrides the ODT_CA bond pad for configurations where CA is shared by two or more DRAMs but CS is not, allowing CS to terminate on all DRAMs.
6. For system configurations where the CK, CS, and CA signals are shared between packages, the package design should provide for the ODT_CA ball to be bonded on the system board outside of the memory package. This provides the necessary control of the ODT function for all die with shared Command Bus signals.
7. When OP[5]=0, CA[5:0] will terminate when the ODT_CA bond pad is HIGH and MR11-OP[6:4] is VALID, and disables termination when ODT_CA is LOW or MR11-OP[6:4] is disabled. When OP[5]=1, termination for CA[5:0] is disabled, regardless of the state of the ODT_CA bond pad or MR11-OP[6:4].
8. To ensure proper operation in a multi-rank configuration, when CA, CK or CS ODT is enabled via MR11 OP[6:4] and also via MR22 or CA-ODT pad setting, the rank providing ODT will continue to terminate the command bus in all DRAM states including Active Self-refresh, Self-refresh Power-down, Active Power-down and Precharge Power-down.

MR22 Register Information for LPDDR4X

Function	Register Type	Operand	Data	Notes
SoC ODT (Controller ODT Value for VOH calibration)	Write-only	OP[2:0]	000_B: Disable (Default) 001_B: RZQ/1 (illegal if MR3 OP[0] = 0_B) 010_B: RZQ/2 011_B: RZQ/3 (illegal if MR3 OP[0] = 0_B) 100_B: RZQ/4 101_B: RZQ/5 (illegal if MR3 OP[0] = 0_B) 110_B: RZQ/6 (illegal if MR3 OP[0] = 0_B) 111_B: RFU	1,2,3
ODTE-CK (CK ODT enabled for nonterminating rank)		OP[3]	ODT bond PAD is ignored 0_B: ODT-CK Enable (Default) 1_B: ODT-CK Disable	2,3,4,
ODTE-CS (CS ODT enable for nonterminating rank)		OP[4]	ODT bond PAD is ignored 0B: ODT-CS Enable (Default) 1_B: ODT-CS Disable	2,3,4
ODTD-CA (CA ODT termination disable)		OP[5]	ODT bond PAD is ignored 0_B: ODT-CA Enable (default) 1_B: ODT-CA Disable	2,3,4

NOTE 1 All values are “typical".

NOTE 2 There are two physical registers assigned to each bit of this MR parameter, designated set point 0 and set point 1. Only the registers for the set point determined by the state of the FSP-WR bit (MR13 OP[6]) will be written to with an MRW command to this MR address, or read from with an MRR command to this address.

NOTE 3 There are two physical registers assigned to each bit of this MR parameter, designated set point 0 and set point 1. The device will operate only according to the values stored in the registers for the active set point, i.e., the set point determined by the state of the FSP-OP bit (MR13 OP[7]). The values in the registers for the inactive set point will be ignored by the device, and may be changed without affecting device operation.

NOTE 4 The ODT_CA pin is ignored by LPDDR4X devices. The ODT_CA pin shall be connected to either V_{DD2} or V_{SS}. CA/ CS/ CK ODT is fully controlled through MR11 and MR22. Before enabling CA termination via MR11, all ranks should have appropriate MR22 termination settings programmed.

3.4.23 MR23 Register Information (MA[5:0] = 17_H)

OP[7]	OP[6]	OP[5]	OP[4]	OP[3]	OP[2]	OP[1]	OP[0]
DQS interval timer run time setting							

Function	Register Type	Operand	Data	Notes
DQS interval timer run time	Write-only	OP[7:0]	00000000_B: DQS interval timer stop via MPC Command (Default) 00000001_B: DQS timer stops automatically at 16th clocks after timer start 00000010_B: DQS timer stops automatically at 32nd clocks after timer start 00000011_B: DQS timer stops automatically at 48th clocks after timer start 00000100_B: DQS timer stops automatically at 64th clocks after timer start ---------- Thru ---------- 00111111_B: DQS timer stops automatically at (63X16)th clocks after timer start $01XXXXXX_B$: DQS timer stops automatically at 2048th clocks after timer start $10XXXXXX_B$: DQS timer stops automatically at 4096th clocks after timer start $11XXXXXX_B$: DQS timer stops automatically at 8192nd clocks after timer start	1, 2

Notes:

1. MPC command with OP[6:0]=1001101_B (Stop DQS Interval Oscillator) stops DQS interval timer in case of MR23 OP[7:0] = 00000000_B.
2. MPC command with OP[6:0]=1001101B (Stop DQS Interval Oscillator) is illegal with non-zero values in MR23 OP[7:0].

3.4.24 MR24 Register Information (MA[5:0] = 18_H)

OP[7]	OP[6]	OP[5]	OP[4]	OP[3]	OP[2]	OP[1]	OP[0]
TRR Mode	TRR Mode BAn			Unlimited	MAC Value		

Function	Register Type	Operand	Data	Notes
MAC Value	Read-only	OP[2:0]	000_B: Unknown when bit OP3=0 (Note 1) Unlimited when bit OP3=1 (Note 2) 001_B: 700K 010_B: 600K 011_B: 500K 100_B: 400K 101_B: 300K 110_B: 200K 111_B: Reserved	
Unlimited MAC		OP[3]	0_B: OP[2:0] define MAC value 1_B: Unlimited MAC value (Note 2, Note 3)	
TRR Mode BAn	Write-only	OP[6:4]	000_B: Bank 0 001_B: Bank 1 010_B: Bank 2 011_B: Bank 3 100_B: Bank 4 101_B: Bank 5 110_B: Bank 6 111_B: Bank 7	
TRR Mode		OP[7]	0_B: Disabled (default) 1_B: Enabled	

Notes:
1. Unknown means that the device is not tested for tMAC and pass/fail value in unknown.
2. There is no restriction to number of activates.
3. MR24 OP [2:0] is set to zero.

3.4.25 MR25 Register Information (MA[5:0] = 19_H)

Mode Register 25 contains one bit of readout per bank indicating that at least one resource is available for Post Package Repair programming.

OP[7]	OP[6]	OP[5]	OP[4]	OP[3]	OP[2]	OP[1]	OP[0]
Bank7	Bank6	Bank5	Bank4	Bank3	Bank2	Bank1	Bank0

Function	Register Type	Operand	Data	Notes
PPR Resource	Read-only	OP[7:0]	0_B: PPR Resource is not available 1_B: PPR Resource is available	

3.4.26 MR32 Register Information (MA[5:0] = 20_H)

OP[7]	OP[6]	OP[5]	OP[4]	OP[3]	OP[2]	OP[1]	OP[0]
DQ Calibration Pattern "A" (default = $5A_H$)							

Function	Register Type	Operand	Data	Notes
Return DQ Calibration Pattern MR32 + MR40	Write	OP[7:0]	X_B: An MPC command with OP[6:0]= 1000011_B causes the device to return the DQ Calibration Pattern contained in this register and (followed by) the contents of MR40. A default pattern "$5A_H$"is loaded at power-up or RESET, or the pattern may be overwritten with a MRW to this register. The contents of MR15 and MR20 will invert the data pattern for a given DQ (See MR15 for more information)	

3.4.27 MR40 Register Information (MA[5:0] = 28H)

OP[7]	OP[6]	OP[5]	OP[4]	OP[3]	OP[2]	OP[1]	OP[0]
DQ Calibration Pattern "B" (default = $3C_H$)							

Function	Register Type	Operand	Data	Notes
Return DQ Calibration Pattern MR32 + MR40	Write only	OP[7:0]	X_B: A default pattern "$3C_H$" is loaded at power-up or RESET, or the pattern may be overwritten with a MRW to this register. See MR32 for more information.	1,2,3

Notes:

1. The pattern contained in MR40 is concatenated to the end of MR32 and transmitted on DQ[15:0] and DMI[1:0] when DQ Read Calibration is initiated via a MPC command. The pattern transmitted serially on each data lane, organized "little endian" such that the low-order bit in a byte is transmitted first. If the data pattern in MR40 is 27_H , then the first bit transmitted with be a '1', followed by '1', '1', '0', '0', '1', '0', and '0'. The bit stream will be 00100111_B.
2. MR15 and MR20 may be used to invert the MR32/MR40 data patterns on the DQ pins. See MR15 and MR20 for more information. Data is never inverted on the DMI[1:0] pins.
3. The data pattern is not transmitted on the DMI[1:0] pins if DBI-RD is disabled via MR3-OP[6].
4. No Data Bus Inversion (DBI) function is enacted during DQ Read Calibration, even if DBI is enabled in MR3-OP[6].

4. COMMAND DEFINITIONS AND TIMING DIAGRAMS

4.1 Activate Command

The ACTIVATE command is composed of two consecutive commands, Activate-1 command and Activate-2. Activate-1 command is issued by holding CS HIGH, CA0 HIGH and CA1 LOW at the first rising edge of the clock and Activate-2 command issued by holding CS HIGH, CA0 HIGH and CA1 HIGH at the first rising edge of the clock. The bank addresses BA0, BA1 and BA2 are used to select desired bank. Row addresses are used to determine which row to activate in the selected bank. The ACTIVATE command must be applied before any READ or WRITE operation can be executed. The device can accept a READ or WRITE command at tRCD after the ACTIVATE command is issed. After a bank has been activated it must be precharged before another ACTIVATE commnand can be applied to the same bank. The bank active and precharge times are defined as tRAS and tRP respectively. The minimum time interval between ACTIVATE commands to the same bank is determined by the RAS cycle time of the device(tRC). The minimum time interval between ACTIVATE commands to different banks is tRRD.

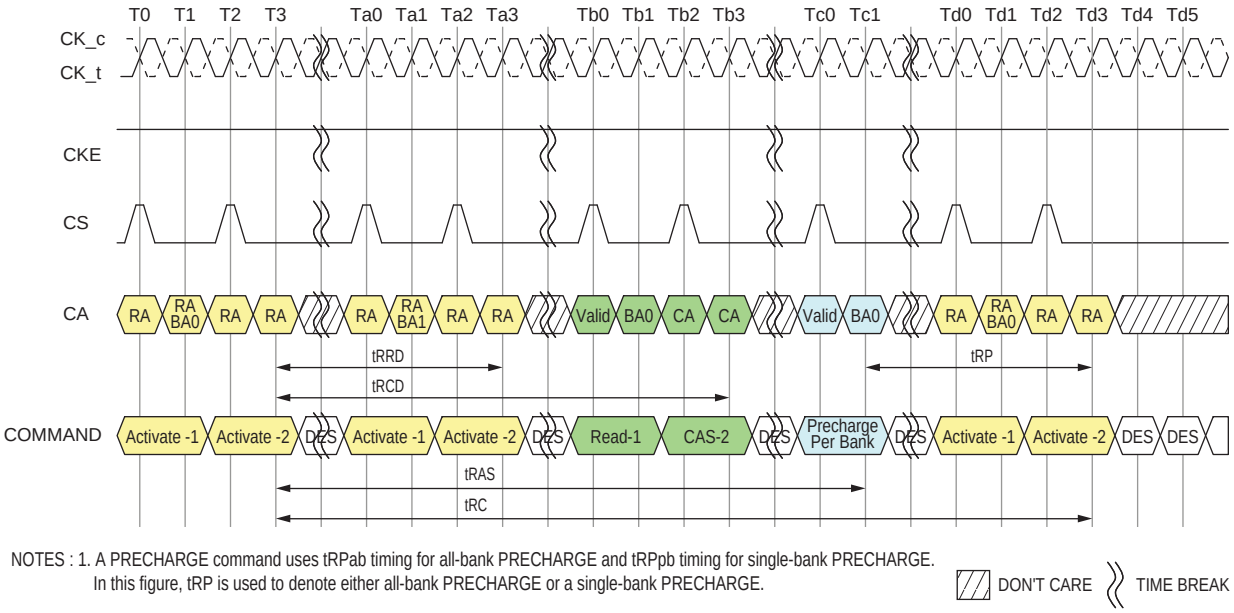

NOTES : 1. A PRECHARGE command uses tRPab timing for all-bank PRECHARGE and tRPpb timing for single-bank PRECHARGE. In this figure, tRP is used to denote either all-bank PRECHARGE or a single-bank PRECHARGE.

Figure 4.1 — ACTIVATE Command

4.2 8-Bank Device Operation

Certain restrictions on operation of the 8-bank LPDDR4 devices must be observed. There are two rules: One rule restricts the number of sequential ACTIVATE commands that can be issued; the other provides more time for RAS precharge for a PRECHARGE ALL command. The rules are as follows:

8 bank device Sequential Bank Activation Restriction:

No more than 4 banks may be activated (or refreshed, in the case of REFpb) in a rolling tFAW window. The number of clocks in a tFAW period is dependent upon the clock frequency, which may vary. If the clock frequency is not changed over this period, converting clocks is done by dividing tFAW[ns] by tCK[ns], and rounding up to the next integer value. As an example of the rolling window, if RU(tFAW/tCK) is 10 clocks, and an ACTIVATE command is issued in clock n, no more than three further ACTIVATE commands can be issued at or between clock n + 1 and n + 9. REFpb also counts as bank activation for purposes of tFAW. If the clock frequency is changed during the tFAW period, the rolling tFAW window may be calculated in clock cycles by adding up the time spent in each clock period. The tFAW requirement is met when the previous n clock cycles exceeds the tFAW time.

The 8-Bank Device Precharge-All Allowance:

tRP for a PRECHRGE ALL command must equal tRPab, which is greater than tRPpb.

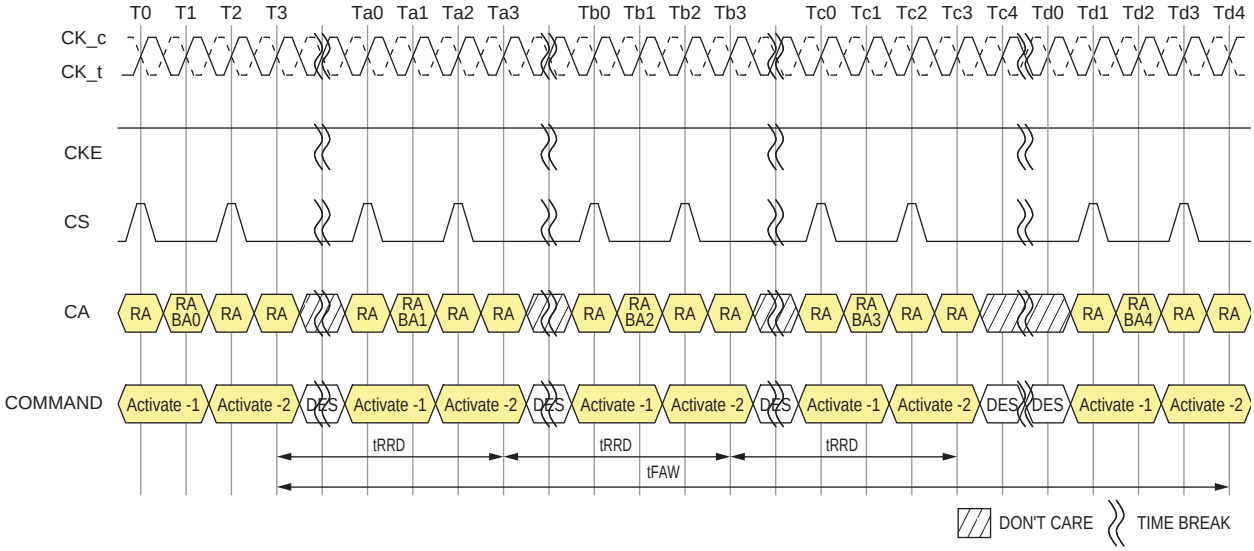

Figure 4.2 — tFAW Timing

4.3 Core Timing

Table 4.1 — Core AC Timing

Parameter	Symbol	Min/Max	Data Rate								Unit	Note
Core Parameters			533	1066	1600	2133	2667	3200	3733	4266		
ACTIVATE-to-ACTIVATE command period (same bank)	tRC	MIN	tRAS + tRPab (with all-bank precharge) tRAS + tRPpb (with per-bank precharge)								ns	
Minimum Self-Refresh Time (Entry to Exit)	tSR	MIN	max(15ns, 3nCK)								ns	
SELF REFRESH exit to next valid command delay	tXSR	MIN	max(tRFCab + 7.5ns, 2nCK)								ns	
Exit Power-Down to next valid command delay	tXP	MIN	max(7.5ns, 5nCK)								ns	
CAS-to-CAS delay	tCCD	MIN	8								tCK(avg)	3
Internal READ to PRECHARGE command delay	tRTP	MIN	max(7.5ns, 8nCK)								ns	
RAS-to-CAS delay	tRCD	MIN	max(18ns, 4nCK)								ns	
Row precharge time (single bank)	tRPpb	MIN	max(18ns, 4nCK)								ns	
Row precharge time (all banks)	tRPab	MIN	max(21ns, 4nCK)								ns	
Row active time	tRAS	MIN	max(42ns, 3nCK)								ns	
		MAX	Min(9 * tREFI * Refresh Rate, 70.2) us (Refresh Rate is specified by MR4, OP[2:0])								-	2
WRITE recovery time	tWR	MIN	max(18ns, 6nCK)								ns	
WRITE-to-READ delay	tWTR	MIN	max(10ns, 8nCK)								ns	
Active bank-A to active bank-B	tRRD	MIN	max(10ns, 4nCK)							max (7.5ns, 4nCK)	ns	4
Precharge to Precharge Delay[1]	tPPD	MIN	4								tCK	1
Four-bank ACTIVATE window	tFAW	MIN	40							30	ns	4

NOTE 1 Precharge to precharge timing restriction does not apply to Auto-Precharge commands.
NOTE 2 Refresh Rate is specified by MR4, OP[2:0].
NOTE 3 The value is based on BL16. For BL32, add 8 tCK(avg) delay.
NOTE 4 Devices supporting 4266 Mbps shall support these timings at lower data rates.

4.4 Read and Write Access Operations

After a bank has been activated, a read or write command can be executed. This is accomplished by asserting CKE asynchronously, with CS and CA[5:0] set to the proper state (see Table 4.68, Command Truth Table) at a rising edge of CK.

The LPDDR4-SDRAM provides a fast column access operation. A single Read or Write command will initiate a burst read or write operation, where data is transferred to/from the DRAM on successive clock cycles. Burst interrupts are not allowed, but the optimal burst length may be set on the fly (see Table 4.68, Command Truth Table).

4.5 Read Preamble and Postamble

The DQS strobe for the LPDDR4-SDRAM requires a pre-amble prior to the first latching edge (the rising edge of DQS_t with DATA "valid"), and it requires a post-amble after the last latching edge. The pre-amble and post-amble lengths are set via mode register writes (MRW).

For READ operations the pre-amble is 2*tCK, but the pre-amble is static (no-toggle) or toggling, selectable via mode register.

LPDDR4 will have a DQS Read post-amble of 0.5*tCK (or extended to 1.5*tCK). Standard DQS post-amble will be 0.5*tCK driven by the DRAM for Reads. A mode register setting instructs the DRAM to drive an additional (extended) one cycle DQS Read post-amble. The drawings below show examples of DQS Read post-amble for both standard (tRPST) and extended (tRPSTE) post-amble operation.

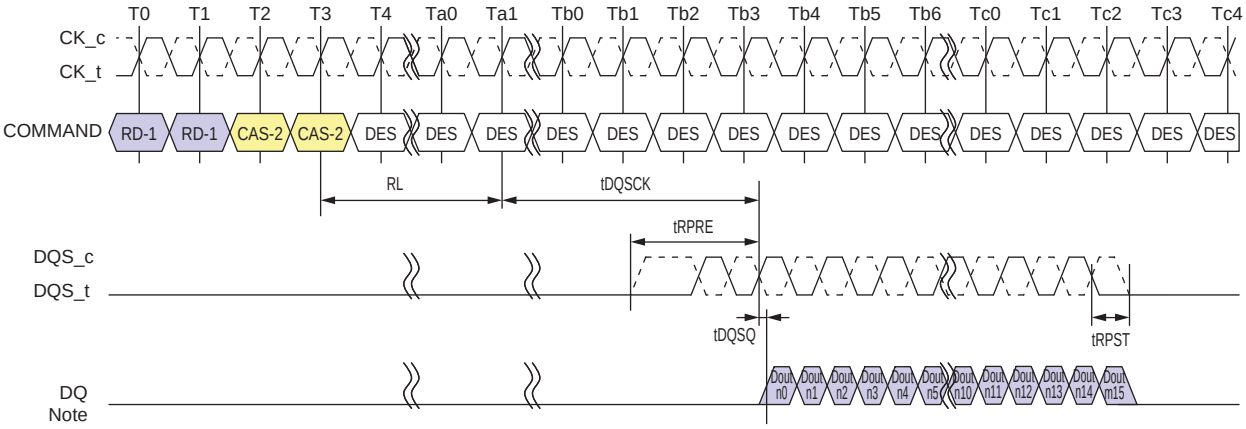

Note
1. BL = 16, Preamble = Toggling, Postamble = 0.5nCK
2. DQS and DQ terminated VSSQ.
3. DQS_t/DQS_c is "don't care" prior to the start of tRPRE.
No transition of DQS is implied, as DQS_t/DQS_c can be HIGH, LOW, or HI-Z prior to tRPRE.

TIME BREAK

Figure 4.3a — DQS Read Preamble and Postamble: Toggling Preamble and 0.5nCK Postamble

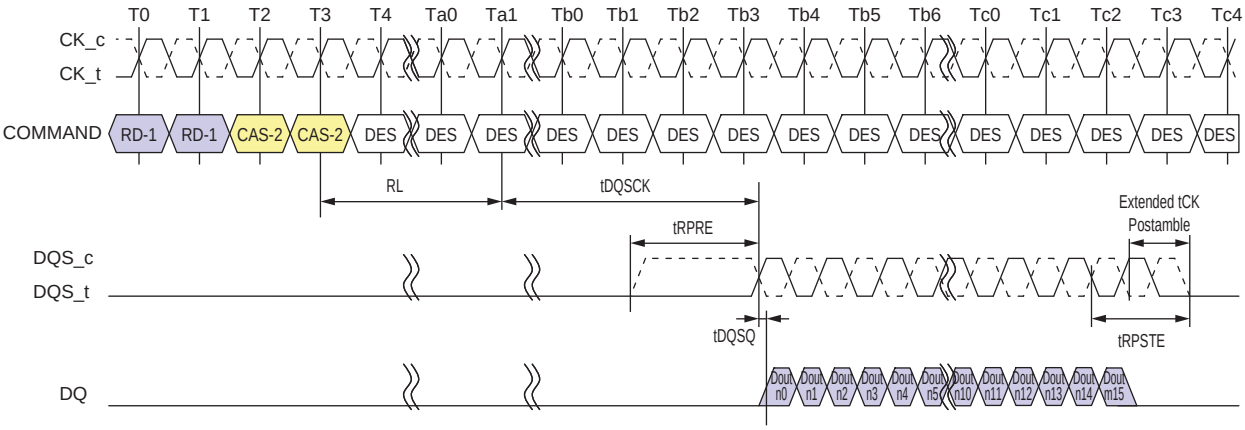

Note
1. BL = 16, Preamble = Static, Postamble = 1.5nCK (Extended)
2. DQS and DQ terminated VSSQ.
3. DQS_t/DQS_c is "don't care" prior to the start of tRPRE.
No transition of DQS is implied, as DQS_t/DQS_c can be HIGH, LOW, or HI-Z prior to tRPRE.

TIME BREAK

Figure 4.3b — DQS Read Preamble and Postamble: Static Preamble and 1.5nCK Postamble

4.6 Burst Read Operation

A burst Read command is initiated with CS, and CA[5:0] asserted to the proper state at the rising edge of CK, as defined by Table 4.68, Command Truth Table.

The command address bus inputs determine the starting column address for the burst. The two low-order address bits are not transmitted on the CA bus and are implied to be “0”, so that the starting burst address is always a multiple of four (ex. 0x0, 0x4, 0x8, 0xC).

The read latency (RL) is defined from the last rising edge of the clock that completes a read command (Ex: the second rising edge of the CAS-2 command) to the rising edge of the clock from which the tDQSCK delay is measured. The first valid data is available RL * tCK + tDQSCK + tDQSQ after the rising edge of Clock that completes a read command.

The data strobe output is driven tRPRE before the first valid rising strobe edge. The first data-bit of the burst is synchronized with the first valid (i.e., post-preamble) rising edge of the data strobe. Each subsequent dataout appears on each DQ pin, edge-aligned with the data strobe. At the end of a burst the DQS signals are driven for another half cycle post-amble, or for a 1.5-cycle postamble if the programmable post-amble bit is set in the mode register.

The RL is programmed in the mode registers.

Pin timings for the data strobe are measured relative to the cross-point of DQS_t and DQS_c.

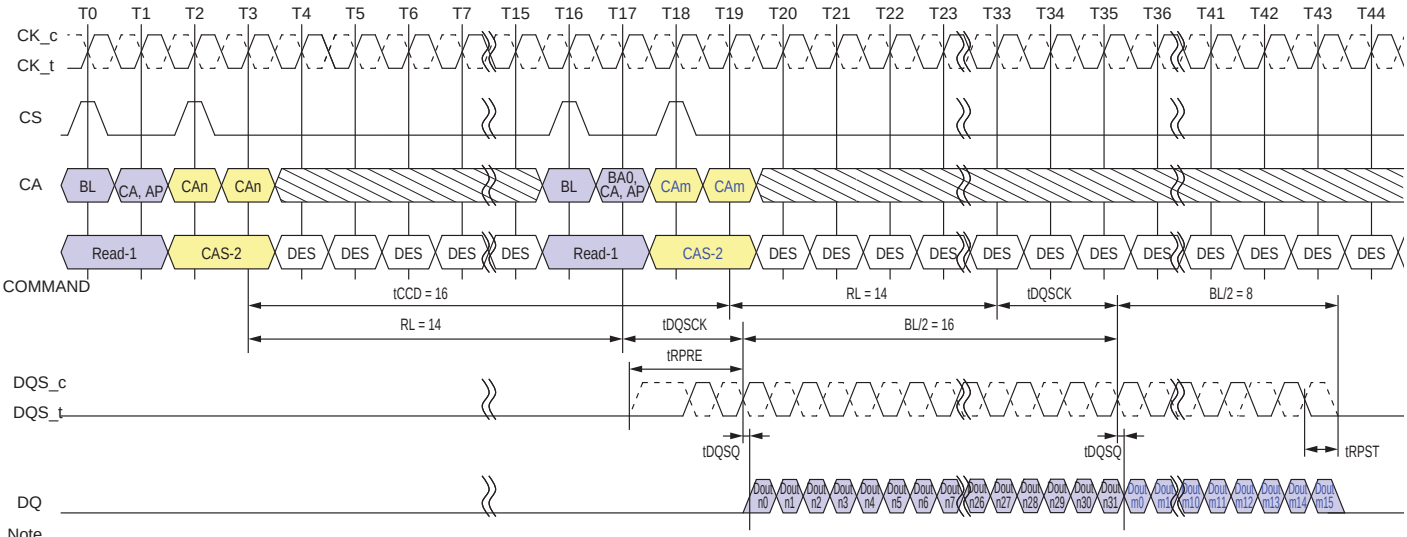

Note
1. BL = 32 for column n, BL = 16 for column m, RL = 14, Preamble = Toggle, Postamble = 0.5nCK, DQ/DQS: VSSQ termination
2. Dout n/m = data-out from column n and column m.
3. DES commands are shown for ease of illustration; other commands may be valid at these times.

DON'T CARE TIME BREAK

Figure 4.4 — Burst Read Timing

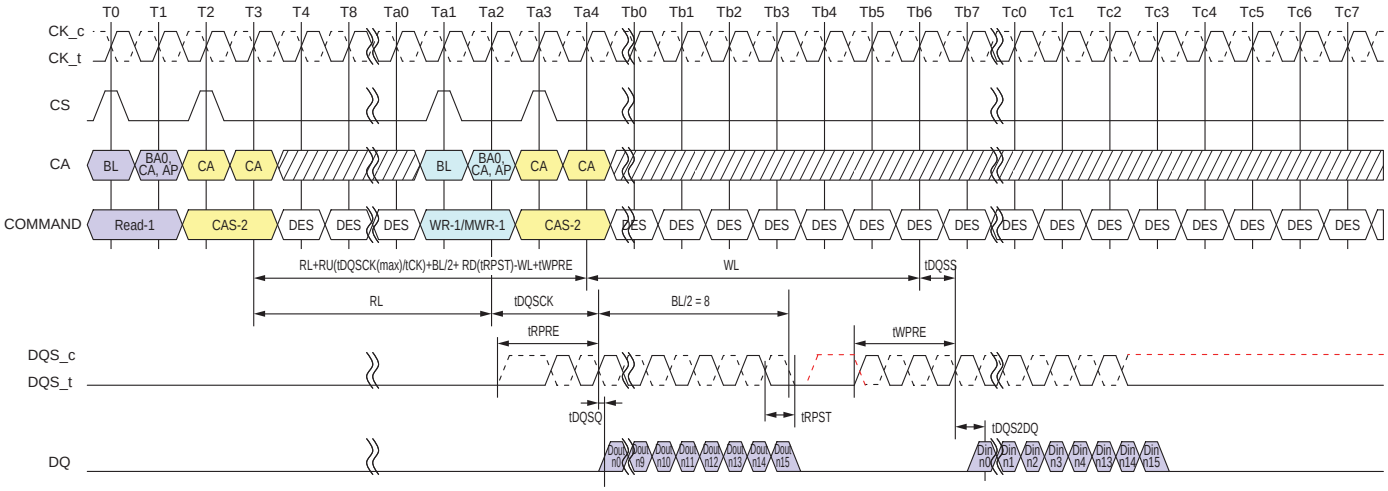

Note
1. BL=16, Read Preamble = Toggle, Read Postamble = 0.5nCK, Write Preamble = 2nCK, Write Postamble = 0.5nCK, DQ/DQS: VSSQ termination
2. Dout n = data-out from column n and Din n = data-in to columnm n
3. DES commands are shown for ease of illustration; other commands may be valid at these times.

Figure 4.5 — Burst Read followed by Burst Write or Burst Mask Write

The minimum time from a Burst Read command to a Write or MASK WRITE command is defined by the read latency (RL) and the burst length (BL). Minimum READ-to-WRITE or MASK WRITE latency is RL+RU(tDQSCK(max)/tCK)+BL/2+ RD(tRPST)-WL+tWPRE.

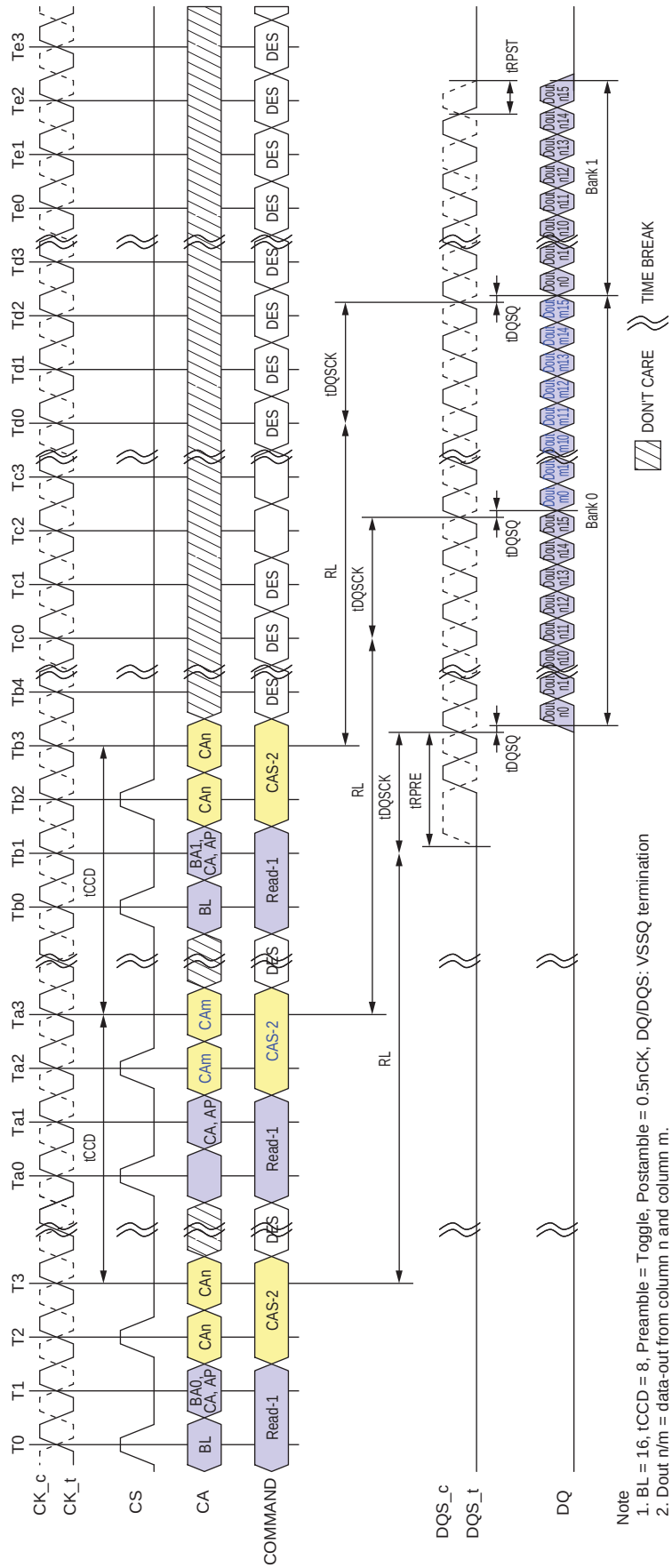

Note
1. BL = 16, tCCD = 8, Preamble = Toggle, Postamble = 0.5nCK, DQ/DQS: VSSQ termination
2. Dout n/m = data-out from column n and column m.
3. DES commands are shown for ease of illustration; other commands may be valid at these times.

Figure 4.6 — Seamless Burst Read

The seamless Burst READ operation is supported by placing a READ command at every tCCD(Min) interval for BL16 (or every 2 x tCCD(Min) for BL32). The seamless Burst READ can access any open bank.

4.7 Read Timing

The read timing is shown in Figure 4.7.

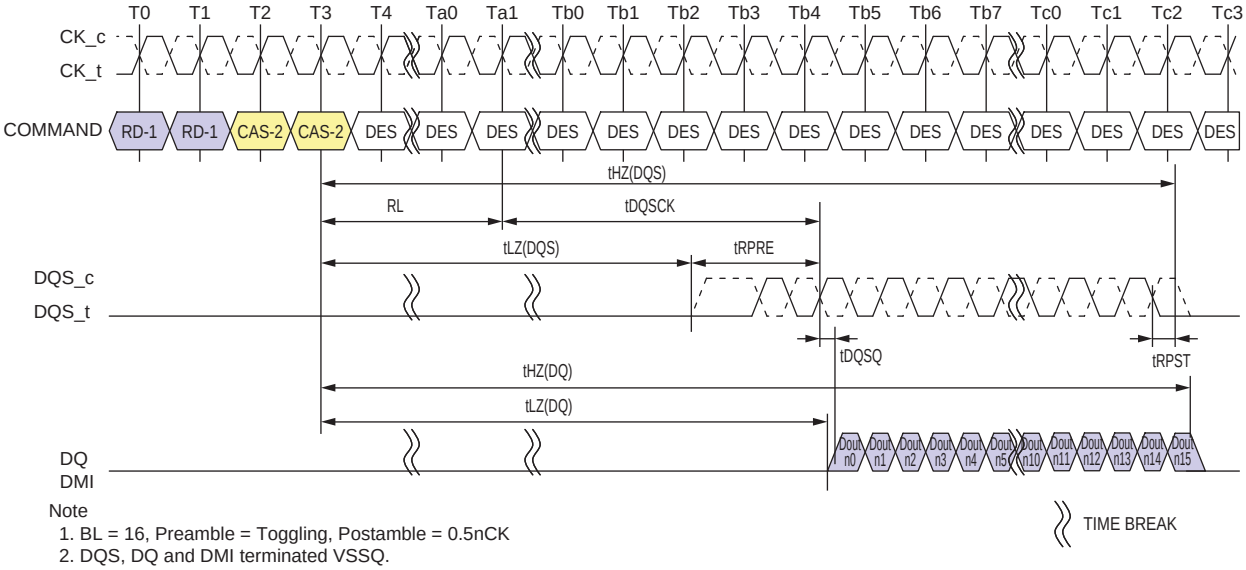

Note
1. BL = 16, Preamble = Toggling, Postamble = 0.5nCK
2. DQS, DQ and DMI terminated VSSQ.
3. Output driver does not turn on before an end point of tLZ(DQS) and tLZ(DQ).
4. Output driver does not turn off before an end point of tHZ(DQS) and tHZ(DQ)

Figure 4.7 — Read Timing

4.7.1 tLZ(DQS), tLZ(DQ), tHZ(DQS), tHZ(DQ) Calculation

tHZ and tLZ transitions occur in the same time window as valid data transitions. These parameters are referenced to a specific voltage level that specifies when the device output is no longer driving tHZ(DQS) and tHZ(DQ), or begins driving tLZ(DQS), tLZ(DQ).

This section shows a method to calculate the point when the device is no longer driving tHZ(DQS) and tHZ(DQ), or begins driving tLZ(DQS), tLZ(DQ), by measuring the signal at two different voltages. The actual voltage measurement points are not critical as long as the calculation is consistent. The parameters tLZ(DQS), tLZ(DQ), tHZ(DQS), and tHZ(DQ) are defined as single ended.

4.7.2 tLZ(DQS) and tHZ(DQS) Calculation for ATE(Automatic Test Equipment)

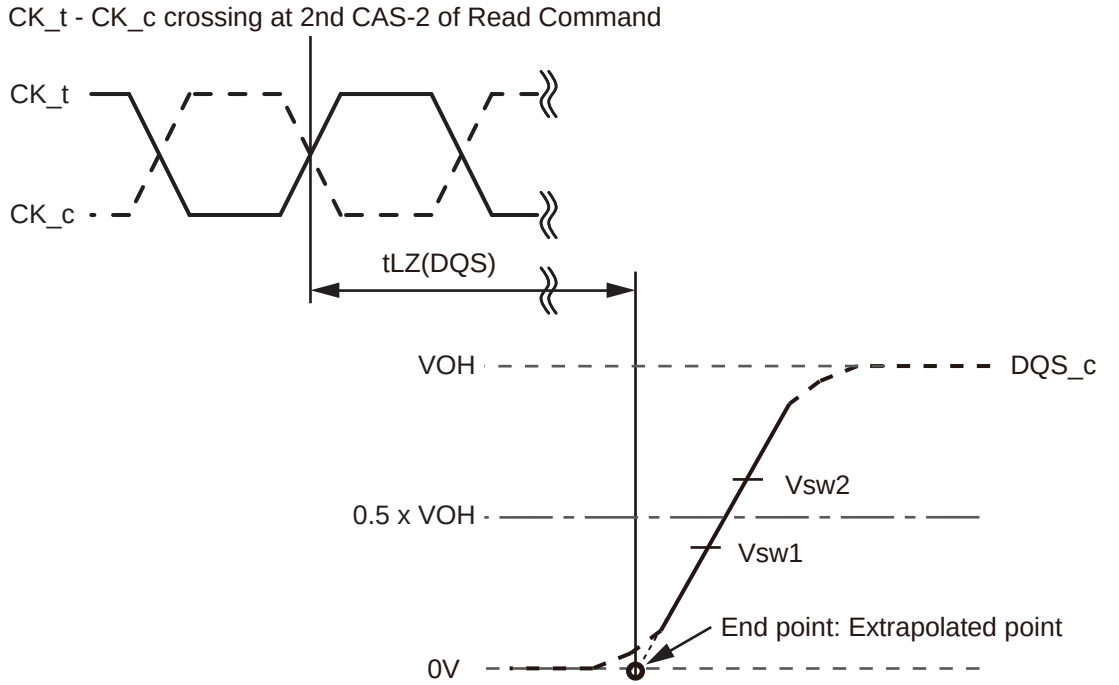

tLZ(DQS) end point is above-mentiond extrapolated point.

Note
1. Conditions for Calibration: Pull Down Driver Ron = 40ohm, VOH = VDDQ/3
2. Termination condition for DQS_t and DQS_C = 50ohm to VSSQ.
3. The VOH level depends on MR22 OP[2:0] and MR3 OP[0] settings as well as device tolerances. Use the actual VOH value for tHZ and tLZ measurements.

Figure 4.8 — tLZ(DQS) method for calculating transitions and end point

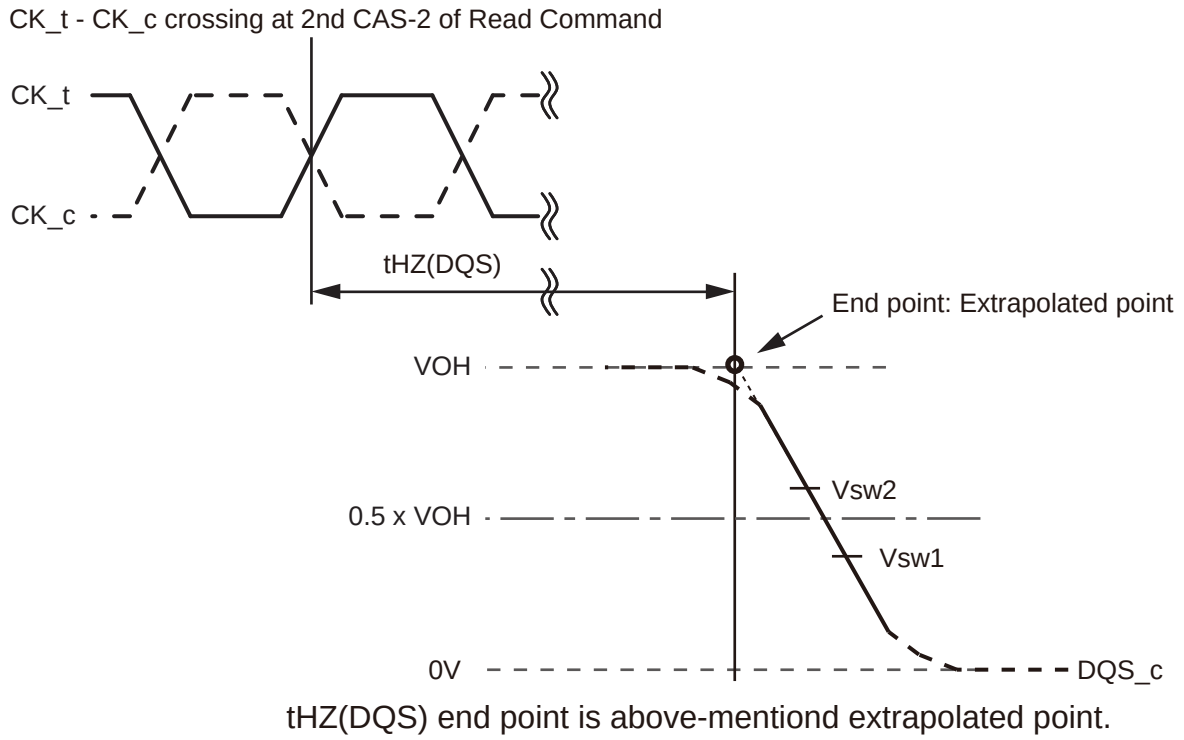

Note
1. Conditions for Calibration: Pull Down Driver Ron = 40ohm, VOH = VDDQ/3
2. Termination condition for DQS_t and DQS_C = 50ohm to VSSQ.
3. The VOH level depends on MR22 OP[2:0] and MR3 OP[0] settings as well as device tolerances. Use the actual VOH value for tHZ and tLZ measurements.

Figure 4.9 — tHZ(DQS) method for calculating transitions and end point

Table 4.2 — Reference Voltage for tLZ(DQS), tHZ(DQS) Timing Measurements

Measured Parameter	Measured Parameter Symbol	Vsw1[V]	Vsw2[V]	Note
DQS_c low-impedance time from CK_t, CK_c	tLZ(DQS)	0.4 x VOH	0.6 x VOH	
DQS_c high impedance time from CK_t, CK_c	tHZ(DQS)	0.4 x VOH	0.6 x VOH	

4.7.3 tLZ(DQ) and tHZ(DQ) Calculation for ATE(Automatic Test Equipment)

CK_t - CK_c crossing at 2nd CAS-2 of Read Command

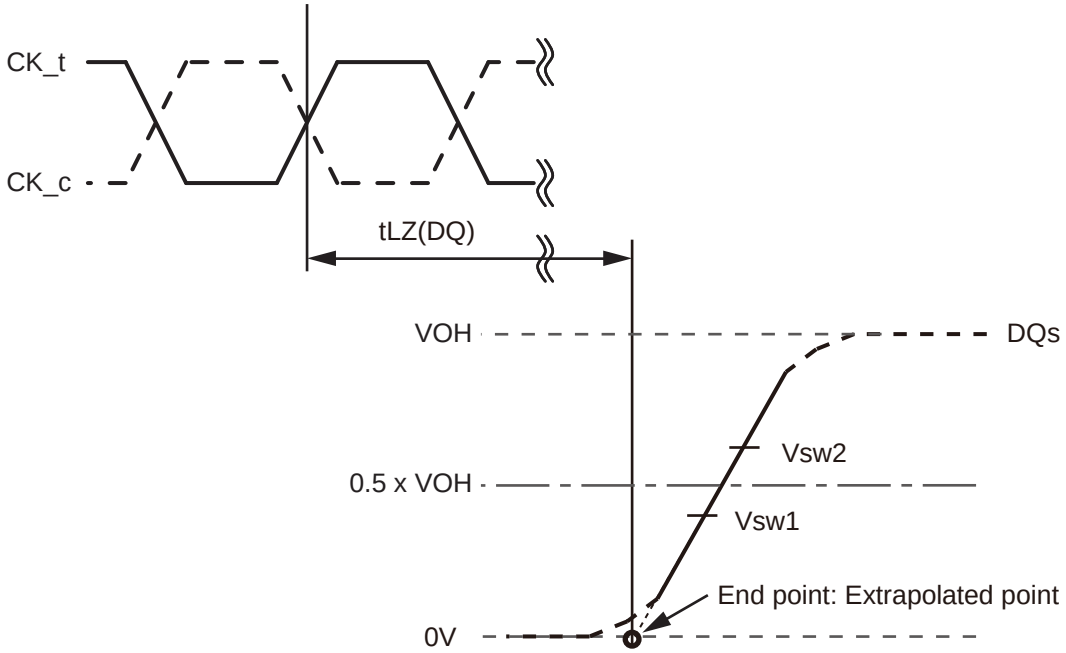

tLZ(DQ) end point is above-mentiond extrapolated point.

Note
1. Conditions for Calibration: Pull Down Driver Ron = 40ohm, VOH = VDDQ/3
2. Termination condition for DQ and DMI = 50ohm to VSSQ.
3. The VOH level depends on MR22 OP[2:0] and MR3 OP[0] settings as well as device tolerances. Use the actual VOH value for tHZ and tLZ measurements.

Figure 4.10 — tLZ(DQ) method for calculating transitions and end point

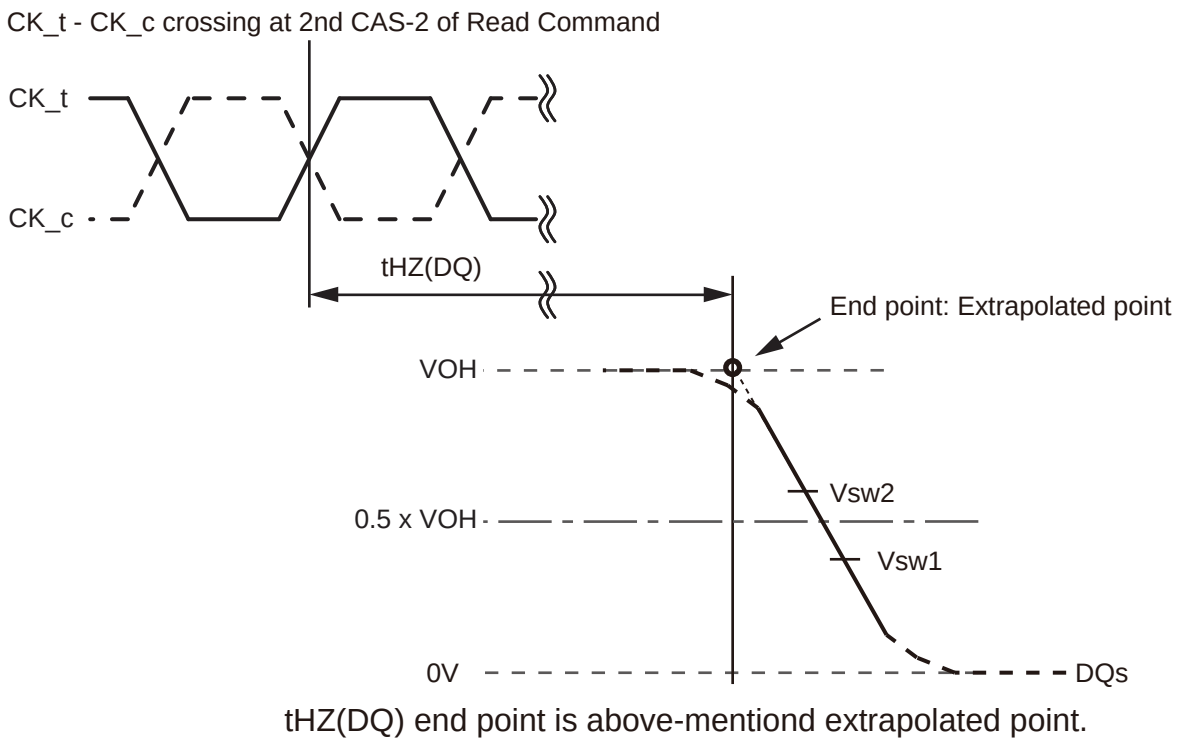

tHZ(DQ) end point is above-mentiond extrapolated point.

Note
1. Conditions for Calibration: Pull Down Driver Ron = 40ohm, VOH = VDDQ/3
2. Termination condition for DQ and DMI = 50ohm to VSSQ.
3. The VOH level depends on MR22 OP[2:0] and MR3 OP[0] settings as well as device tolerances. Use the actual VOH value for tHZ and tLZ measurements.

Figure 4.11 — tHZ(DQ) method for calculating transitions and end point

Table 4.3 — Reference Voltage for tLZ(DQ), tHZ(DQ) Timing Measurements

Measured Parameter	Measured Parameter Symbol	Vsw1[V]	Vsw2[V]	Note
DQ low-impedance time from CK_t, CK_c	tLZ(DQ)	0.4 x VOH	0.6 x VOH	
DQ high impedance time from CK_t, CK_c	tHZ(DQ)	0.4 x VOH	0.6 x VOH	

Table 4.4 — Read AC Timing

Parameter	Symbol	Min/Max	Data Rate								Unit
Read Timing			533	1066	1600	2133	2667	3200	3733	4266	
READ preamble	tRPRE	Min	1.8								tCK(avg)
0.5 tCK READ postamble	tRPST	Min	0.4								tCK(avg)
1.5 tCK READ postamble	tRPST	Min	1.4								tCK(avg)
DQ low-impedance time from CK_t, CK_c	tLZ(DQ)	Min	(RL x tCK) + tDQSCK(Min) - 200ps								ps
DQ high impedance time from CK_t, CK_c	tHZ(DQ)	Max	(RL x tCK) + tDQSCK(Max) + tDQSQ(Max) + (BL/2 x tCK) - 100ps								ps
DQS_c low-impedance time from CK_t, CK_c	tLZ(DQS)	Min	(RL x tCK) + tDQSCK(Min) - (tRPRE(Max) x tCK) - 200ps								ps
DQS_c high impedance time from CK_t, CK_c	tHZ(DQS)	Max	(RL x tCK) + tDQSCK(Max) + (BL/2 x tCK) + (tRPST(Max) x tCK) - 100ps								ps
DQS-DQ skew	tDQSQ	Max	0.18								UI

4.8 tDQSCK Timing Table

Table 4.5 — tDQSCK Timing Table

Parameter	Symbol	Min	Max	Unit	Notes
DQS Output Access Time from CK_t/CK_c	tDQSCK	1.5	3.5	ns	1
DQS Output Access Time from CK_t/CK_c - Temperature Variation	tDQSCK_temp	-	4	ps/°C	2
DQS Output Access Time from CK_t/CK_c - Voltage Variation	tDQSCK_volt	-	7	ps/mV	3

Notes:

1. Includes DRAM process, voltage and temperature variation. It includes the AC noise impact for frequencies > 20 MHz and max voltage of 45 mV pk-pk from DC-20 MHz at a fixed temperature on the package. The volage supply noise must comply to the component Min-Max DC Operating conditions.
2. tDQSCK_temp max delay variation as a function of Temperature.
3. tDQSCK_volt max delay variation as a function of DC voltage variation for V_{DDQ} and V_{DD2}. tDQSCK_volt should be used to calculate timing variation due to V_{DDQ} and V_{DD2} noise < 20 MHz. Host controller do not need to account for any variation due to V_{DDQ} and V_{DD2} noise > 20 MHz. The voltage supply noise must comply to the component Min-Max DC Operating conditions. The voltage variation is defined as the Max[abs{tDQSCKmin@V1-tDQSCKmax@V2}, abs{tDQSCKmax@V1-tDQSCKmin@V2}]/abs{V1-V2}. For tester measurement $V_{DDQ} = V_{DD2}$ is assumed.

4.8.1 CK to DQS Rank to Rank variation

Table 4.6 — tDQSCK_rank2rank Timing Table

Parameter	Symbol	Min	Max	Unit	Note
Read Timing					
CK to DQS Rank to Rank variation	tDQSCK_rank2rank	-	1.0	ns	1,2

Notes:

1. The same voltage and temperature are applied to tDQS2CK_rank2rank.
2. tDQSCK_rank2rank parameter is applied to multi-ranks per byte lane within a package consisting of the same design dies.

4.9 Write Preamble and Postamble

The DQS strobe for the LPDDR4-SDRAM requires a pre-amble prior to the first latching edge (the rising edge of DQS_t with DATA "valid"), and it requires a post-amble after the last latching edge. The pre-amble and post-amble lengths are set via mode register writes (MRW).

For WRITE operations, a 2*tCK pre-amble is required at all operating frequencies.

LPDDR4 will have a DQS Write post-amble of 0.5*tCK or extended to 1.5*tCK. Standard DQS post-amble will be 0.5*tCK driven by the memory controller for Writes. A mode register setting instructs the DRAM to drive an additional (extended) one cycle DQS Write post-amble. The drawings below show examples of DQS Write post-amble for both standard (tWPST) and extended (tWPSTE) post-amble operation.

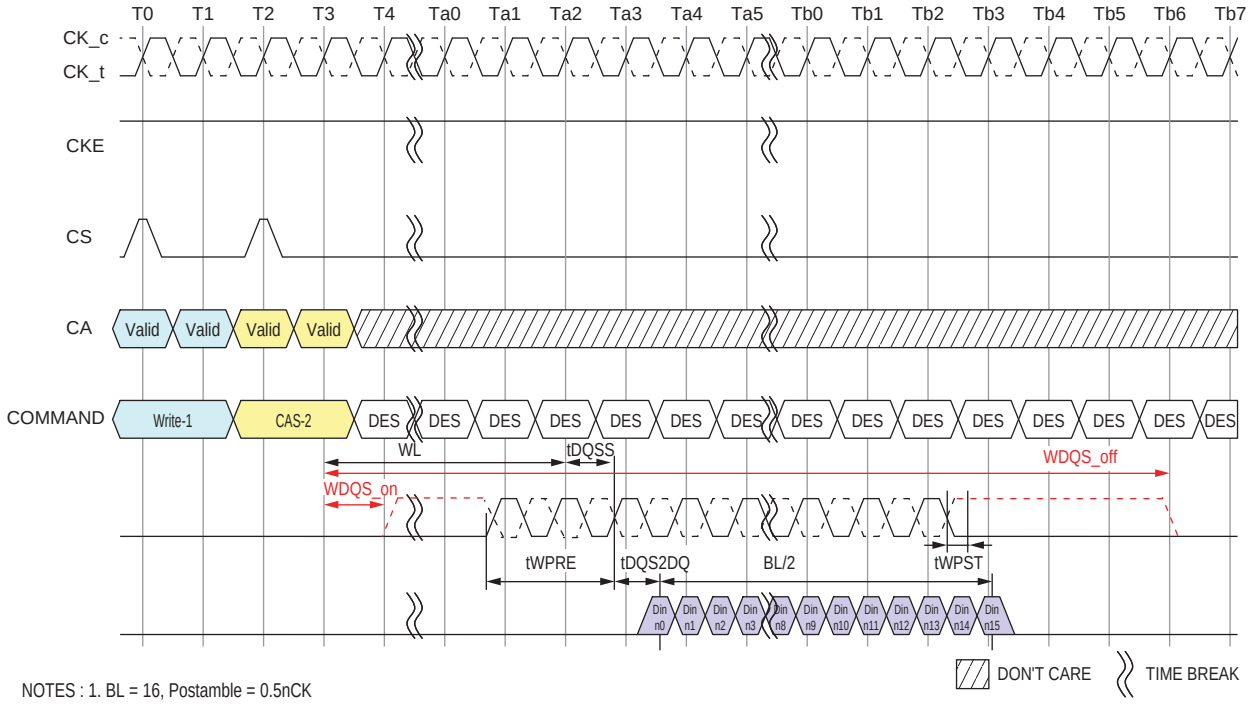

NOTES : 1. BL = 16, Postamble = 0.5nCK
2. DQS and DQ terminated VSSQ
3. DQS_t/DQS_c is “don’t care” prior to the start of tWPRE.
No transition of DQS is implied, as DQS_t/DQS_c can be HIGH, LOW, or HI-Z prior to tWPRE.

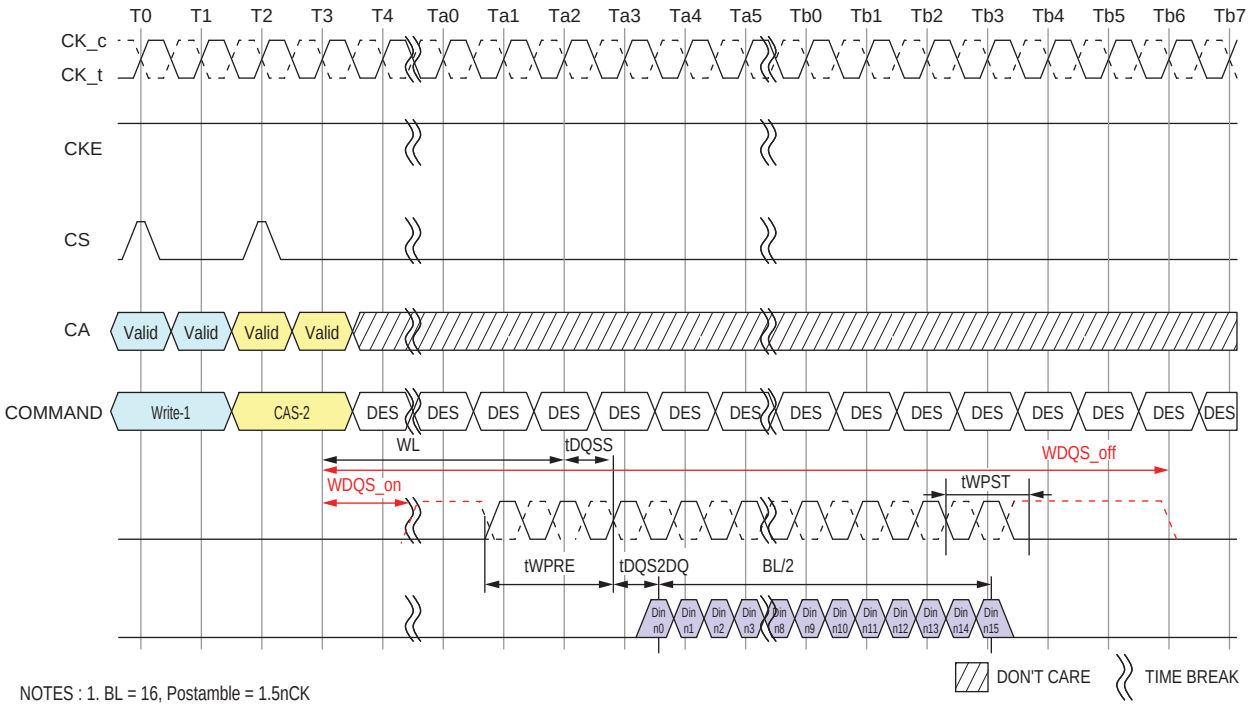

NOTES : 1. BL = 16, Postamble = 1.5nCK
2. DQS and DQ terminated VSSQ
3. DQS_t/DQS_c is "don't care" prior to the start of tWPRE.
No transition of DQS is implied, as DQS_t/DQS_c can be HIGH, LOW, or HI-Z prior to tWPRE.

Figure 4.13 — DQS Write Preamble and Postamble: 1.5nCK Postamble

4.10 Burst Write Operation

A burst WRITE command is initiated with CS, and CA[5:0] asserted to the proper state at the rising edge of CK, as defined by Table 4.68. Column addresses C[3:2] should be driven LOW for Burst WRITE commands, and column addresses C[1:0] are not transmitted on the CA bus (and are assumed to be zero), so that the starting column burst address is always aligned with a 32B boundary. The write latency (WL) is defined from the last rising edge of the clock that completes a write command (Ex: the second rising edge of the CAS-2 command) to the rising edge of the clock from which tDQSS is measured. The first valid “latching” edge of DQS must be driven WL * tCK + tDQSS after the rising edge of Clock that completes a write com-mand.

The LPDDR4-SDRAM uses an un-matched DQS-DQ path for lower power, so the DQS-strobe must arrive at the SDRAM ball prior to the DQ signal by the amount of tDQS2DQ. The DQS-strobe output is driven tWPRE before the first valid rising strobe edge. The tWPRE pre-amble is required to be 2 x tCK. The DQS-strobe must be trained to arrive at the DQ pad center-aligned with the DQ-data. The DQ-data must be held for tDIVW (data input valid window) and the DQS must be periodically trained to stay centered in the tDIVW window to compensate for timing changes due to temperature and voltage variation. Burst data is captured by the SDRAM on successive edges of DQS until the 16 or 32 bit data burst is complete. The DQS-strobe must remain active (toggling) for tWPST (WRITE post-amble) after the completion of the burst WRITE. After a burst WRITE operation, tWR must be satisfied before a PRECHARGE command to the same bank can be issued. Pin input timings are measured relative to the crosspoint of DQS_t and DQS_c.

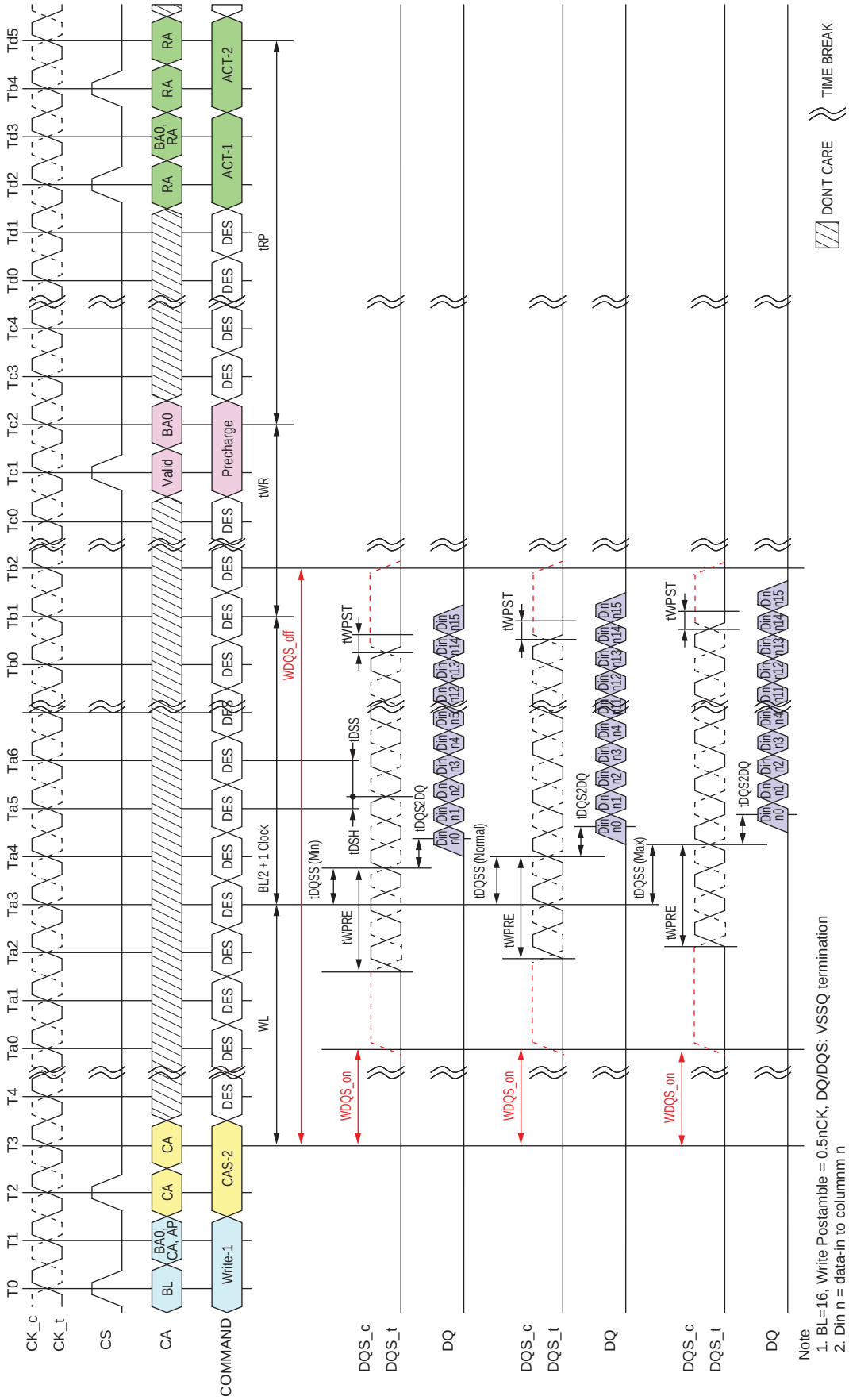

Note
1. BL=16, Write Postamble = 0.5nCK, DQ/DQS: VSSQ termination
2. Din n = data-in to columnm n
3. The minimum number of clock cycles from the burst write command to the precharge command for same bank is [WL + 1 + BL/2 + RU(tWR/tCK)].
4. tWR starts at the rising edge of CK after the last latching edge of DQS.
5. DES commands are shown for ease of illustration; other commands may be valid at these times.

Figure 4.14 — Burst Write Operation

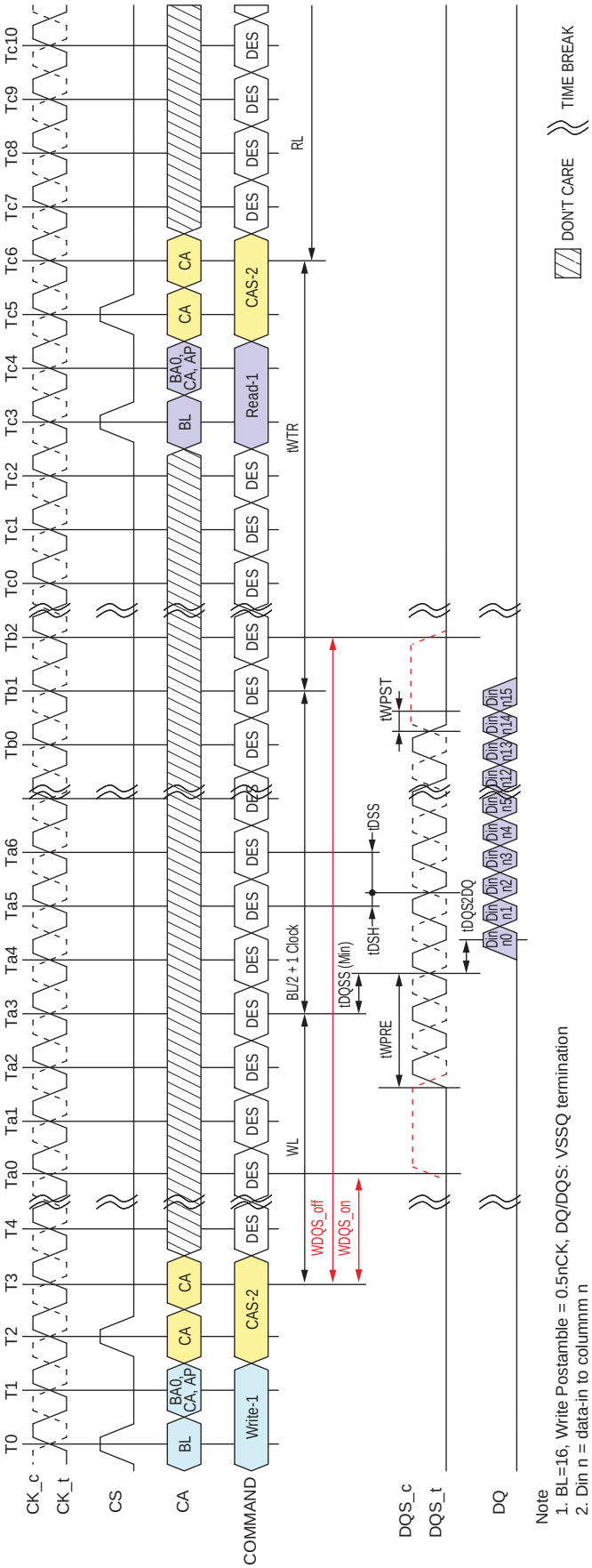

Note
1. BL=16, Write Postamble = 0.5nCK, DQ/DQS: VSSQ termination
2. Din n = data-in to columnm n
3. The minimum number of clock cycles from the burst write command to the burst read command for any bank is [WL + 1 + BL/2 + RU(tWTR/tCK)].
4. tWTR starts at the rising edge of CK after the last latching edge of DQS.
5. DES commands are shown for ease of illustration; other commands may be valid at these times.

Figure 4.15 — Burst Write Followed by Burst Read

4.11 Write Timing

The write timing is shown in Figure 4.16.

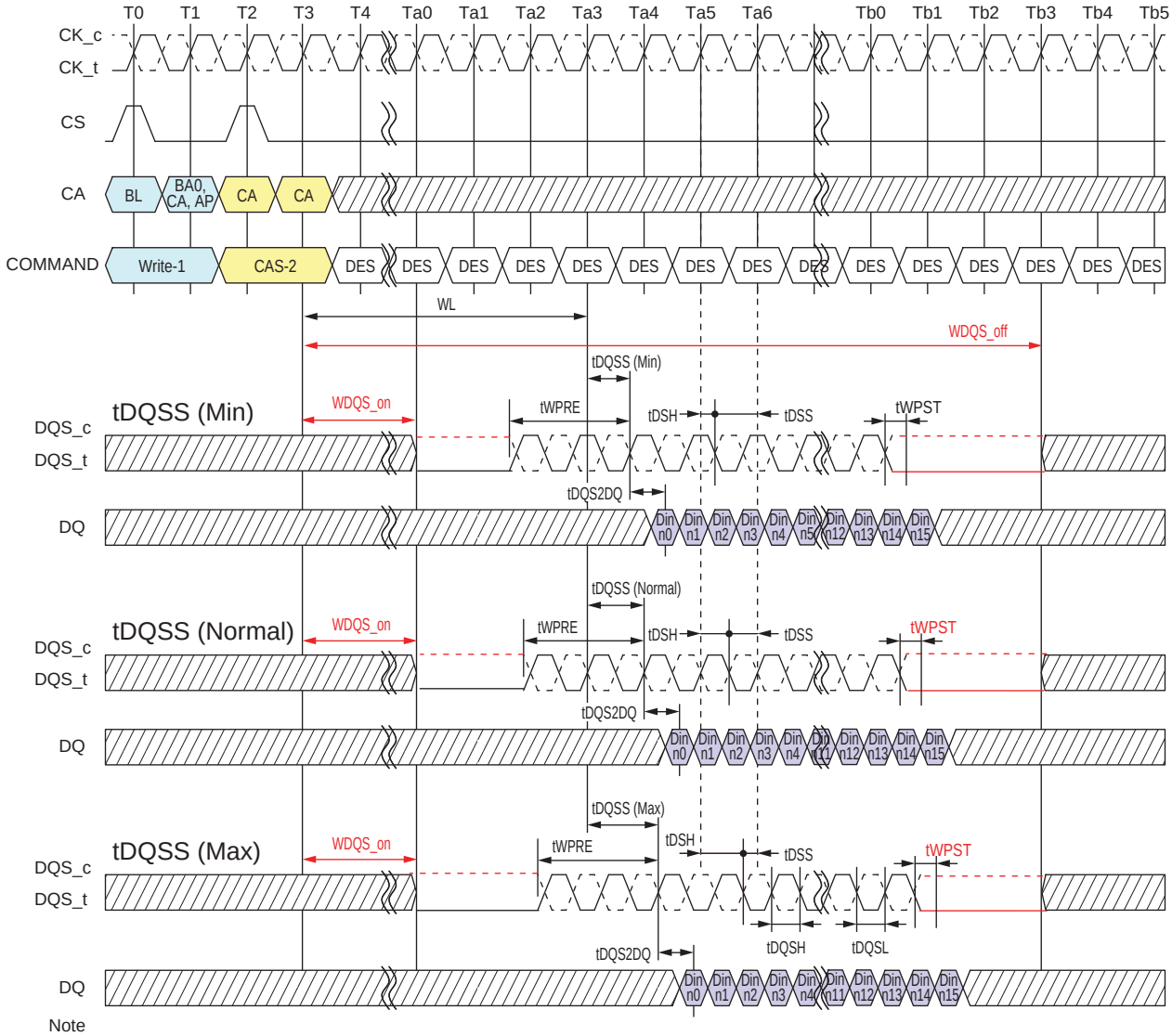

Note
1. BL=16, Write Postamble = 0.5nCK
2. Din n = data-in to columnm n
3. DES commands are shown for ease of illustration; other commands may be valid at these times.

DON'T CARE TIME BREAK

Figure 4.16 — Write Timing

4.11.1 tWPRE Calculation for ATE(Automatic Test Equipment)

The method for calculating differential pulse widths for tWPRE is shown in Figure 4.17.

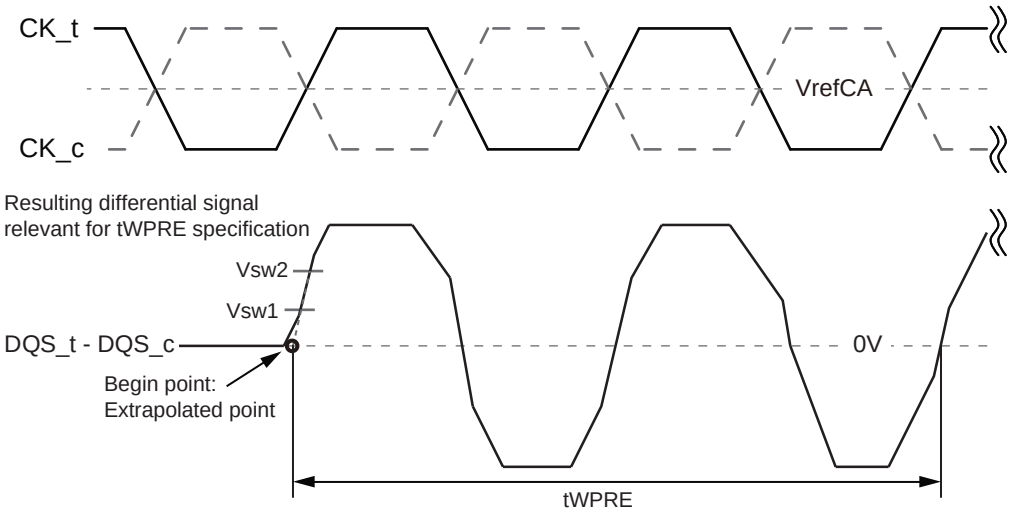

Note
1.

4.17 — Method for calculating tWPRE transitions and endpoints

Table 4.7 — Reference Voltage for tWPRE Timing Measurements

Measured Parameter	Measured Parameter Symbol	Vsw1[V]	Vsw2[V]	Note
DQS_t, DQS_c differential WRITE Preamble	tWPRE	VIHL_AC x 0.3	VIHL_AC x 0.7	

4.11.2 tWPST Calculation for ATE(Automatic Test Equipment)

The method for calculating differential pulse widths for tWPST is shown in Figure 4.18.

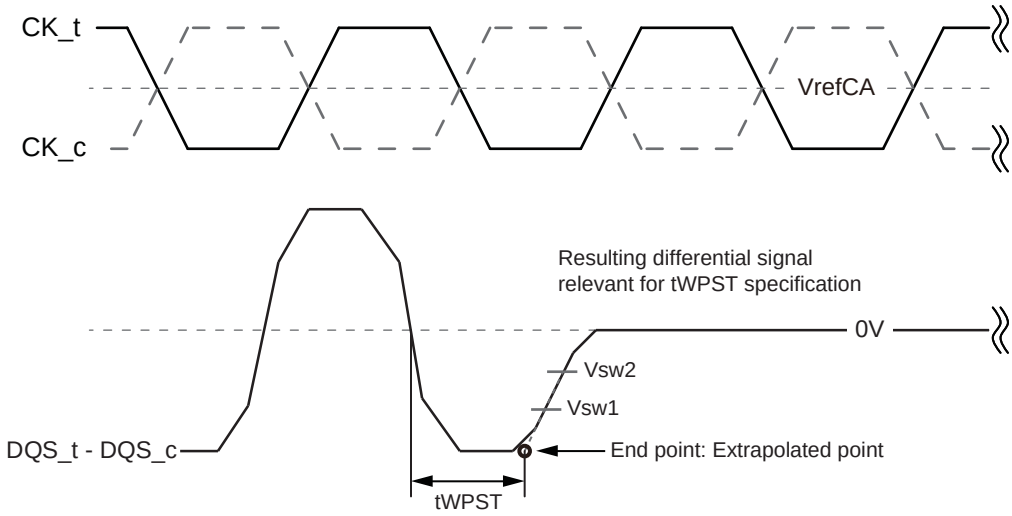

Note
1. Termination condition for DQS_t, DQS_c, DQ and DMI = 50ohm to VSSQ.
2. Write Postamble: 0.5tCK
3. The method for calculating differential pulse widths for 1.5 tCK Postamble is

Figure 4.18 — Method for calculating tWPST transitions and endpoints

Table 4.8 — Reference Voltage for tWPST Timing Measurements

Measured Parameter	Measured Parameter Symbol	Vsw1[V]	Vsw2[V]	Note
DQS_t, DQS_c differential WRITE Postamble	tWPST	- (VIHL_AC x 0.7)	- (VIHL_AC x 0.3)	

Table 4.9 — Write AC Timing

Parameter	Symbol	Min/Max	Data Rate								Unit	Note
Write Timing			533	1066	1600	2133	2667	3200	3733	4266		
Write command to 1st DQS latching	tDQSS	Min	0.75								tCK(avg)	
		Max	1.25									
DQS input high-level	tDQSH	Min	0.4								tCK(avg)	
DQS input low-level width	tDQSL	Min	0.4								tCK(avg)	
DQS falling edge to CK setup time	tDSS	Min	0.2								tCK(avg)	
DQS falling edge hold time from CK	tDSH	Min	0.2								tCK(avg)	
Write preamble	tWPRE	Min	1.8								tCK(avg)	
0.5 tCK Write postamble	tWPST	Min	0.4								tCK(avg)	1
1.5 tCK Write postamble	tWPST	Min	1.4								tCK(avg)	1

NOTE 1 The length of Write Postamble depends on MR3 OP1 setting.

4.12 Read and Write Latencies

Table 4.10 — Read and Write Latencies

Read Latency		Write Latency		nWR	nRTP	Lower Clock Frequency Limit [MHz]	Upper Clock Frequency Limit [MHz]	Notes
No DBI	w/ DBI	Set A	Set B					
6	6	4	4	6	8	10	266	1,2,3,4,5,6
10	12	6	8	10	8	266	533	
14	16	8	2	16	8	533	800	
20	22	10	18	20	8	800	1066	
24	28	12	22	24	10	1066	1333	
28	32	14	26	30	12	1333	1600	
32	36	16	30	34	14	1600	1866	
36	40	18	34	40	16	1866	2133	

Notes:

1. The LPDDR4 SDRAM device should not be operated at a frequency above the Upper Frequency Limit, or below the Lower Frequency Limit, shown for each RL, WL, nRTP, or nWR value.
2. DBI for Read operations is enabled in MR3 OP[6]. When MR3 OP[6]=0, then the "No DBI" column should be used for Read Latency. When MR3 OP[6]=1, then the "w/DBI" column should be used for Read Latency.
3. Write Latency Set "A" and Set "B" is determined by MR2 OP[6]. When MR2 OP[6]=0, then Write Latency Set "A" should be used. When MR2 OP[6]=1, then Write Latency Set "B" should be used.
4. The programmed value of nWR is the number of clock cycles the LPDDR4 SDRAM device uses to determine the starting point of an internal Precharge operation after a Write burst with AP (Auto Precharge). It is determined by RU(tWR/tCK).
5. The programmed value of nRTP is the number of clock cycles the LPDDR4 SDRAM device uses to determine the starting point of an internal Precharge operation after a Read burst with AP (Auto Precharge). It is determined by RU(tRTP/tCK).
6. nRTP shown in this table is valid for BL16 only. For BL32, the SDRAM will add 8 clocks to the nRTP value before starting a precharge.

4.13 Postamble and Preamble merging behavior

The DQS strobe for the device requires a preamble prior to the first latching edge (the rising edge of DQS_t with data valid), and it requires a postamble after the last latching edge. The preamble and postamble options are set via Mode Register Write commands.

In Read to Read or Write to Write operations with tCCD=BL/2, postamble for 1st command and preamble for 2nd command will disappear to create consecutive DQS latching edge for seamless burst operations. But in the case of Read to Read or Write to Write operations with command interval of tCCD+1,tCCD+2, etc., they will not completely disappear because it's not seamless burst operations.

Timing diagrams in this material describe Postamble and Preamble merging behavior in Read to Read or Write to Write operations with tCCD+n.

4.13.1 Read to Read Operation

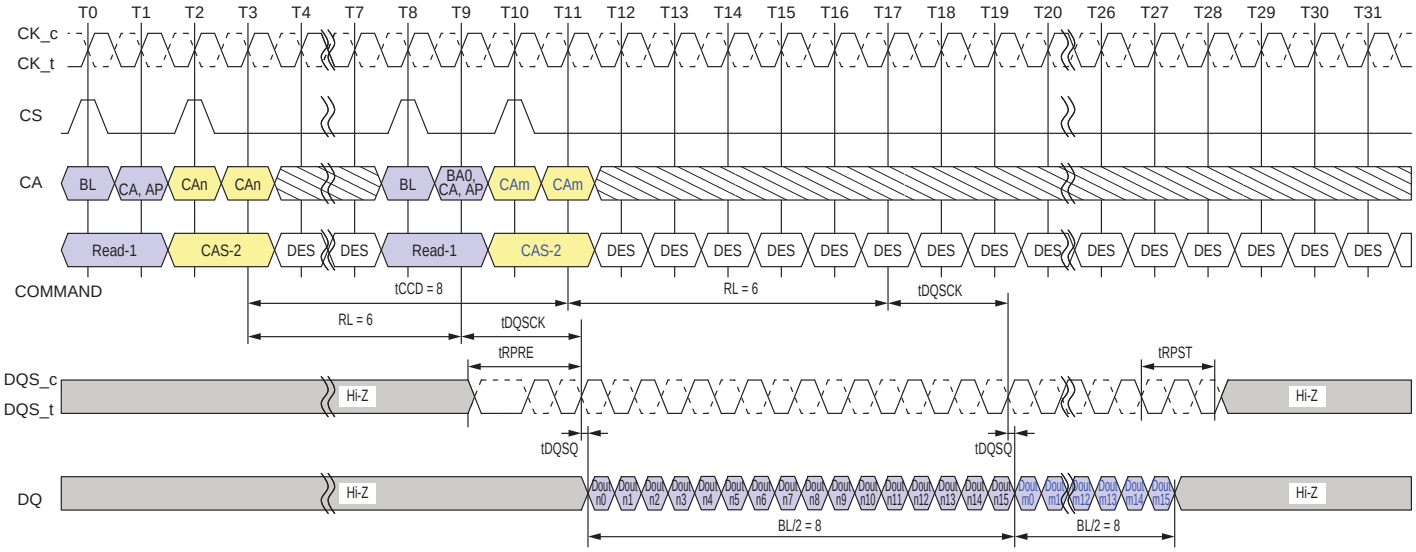

Note
1. BL = 16 for column n and column m, RL = 6, Preamble = Toggle, Postamble = 1.5nCK
2. Dout n/m = data-out from column n and column m.
3. DES commands are shown for ease of illustration; other commands may be valid at these times.

Figure 4.19 — Seamless Reads Operation: tCCD = Min, Preamble = Toggle, 1.5nCK Postamble

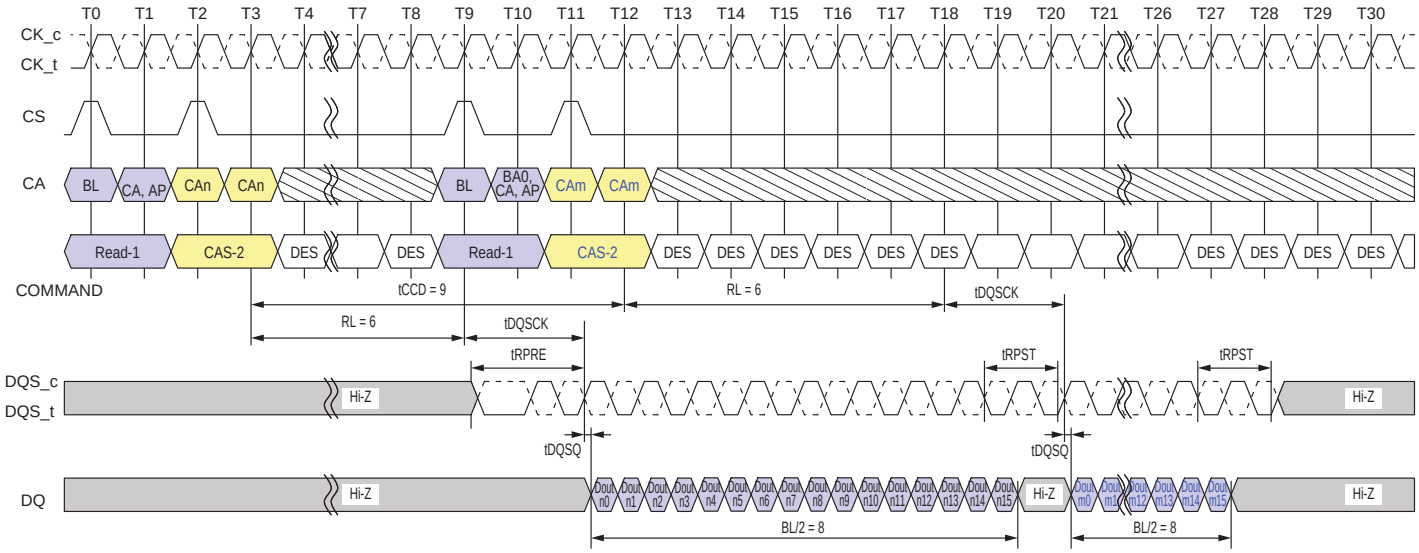

Note
1. BL = 16 for column n and column m, RL = 6, Preamble = Toggle, Postamble = 1.5nCK
2. Dout n/m = data-out from column n and column m.
3. DES commands are shown for ease of illustration; other commands may be valid at these times.

Figure 4.20 — Consecutive Reads Operation: tCCD = Min +1, Preamble = Toggle, 1.5nCK Postamble

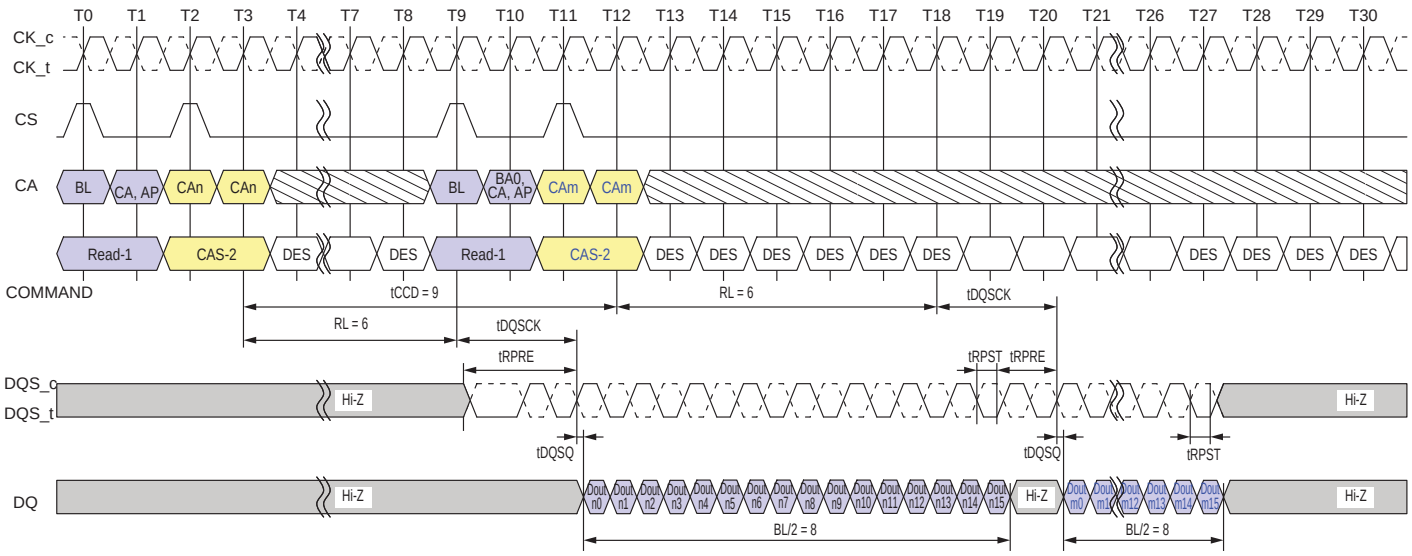

Note
1. BL = 16 for column n and column m, RL = 6, Preamble = Toggle, Postamble = 0.5nCK
2. Dout n/m = data-out from column n and column m.
3. DES commands are shown for ease of illustration; other commands may be valid at these times.

DON'T CARE TIME BREAK

Figure 4.21 — Consecutive Reads Operation: tCCD = Min +1, Preamble = Toggle, 0.5nCK Postamble

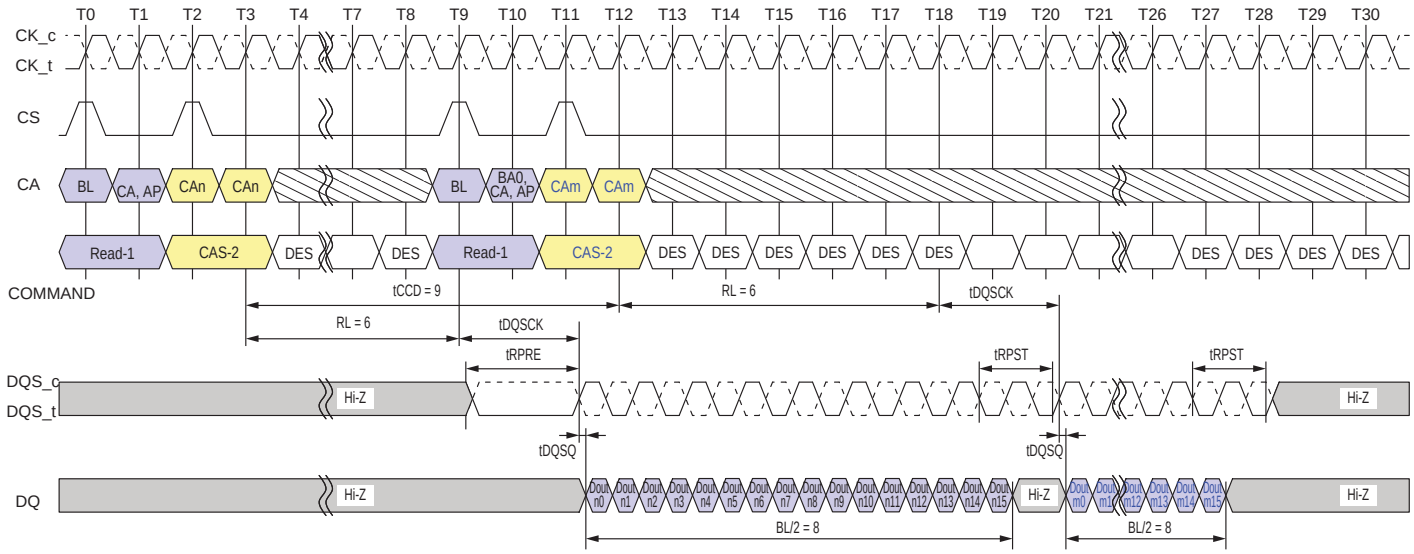

Note
1. BL = 16 for column n and column m, RL = 6, Preamble = Static, Postamble = 1.5nCK
2. Dout n/m = data-out from column n and column m.
3. DES commands are shown for ease of illustration; other commands may be valid at these times.

DON'T CARE TIME BREAK

Figure 4.22 — Consecutive Reads Operation: tCCD = Min +1, Preamble = Static, 1.5nCK Postamble

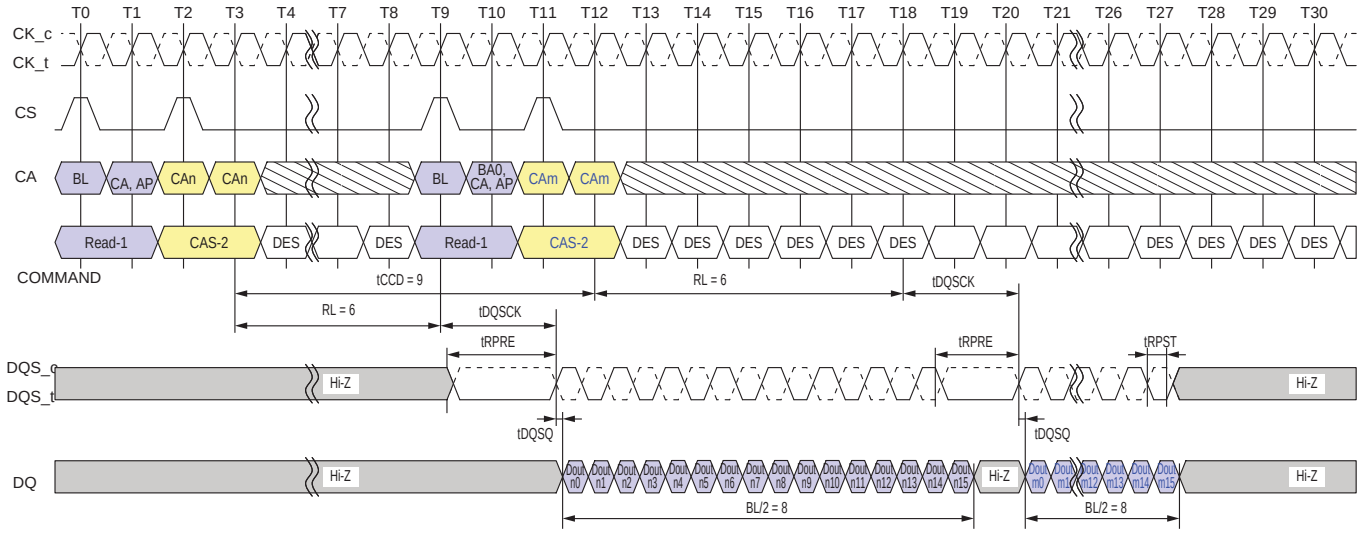

Note
1. BL = 16 for column n and column m, RL = 6, Preamble = Static, Postamble = 0.5nCK
2. Dout n/m = data-out from column n and column m.
3. DES commands are shown for ease of illustration; other commands may be valid at these times.

DON'T CARE TIME BREAK

Figure 4.23 — Consecutive Reads Operation: tCCD = Min +1, Preamble = Static, 0.5nCK Postamble

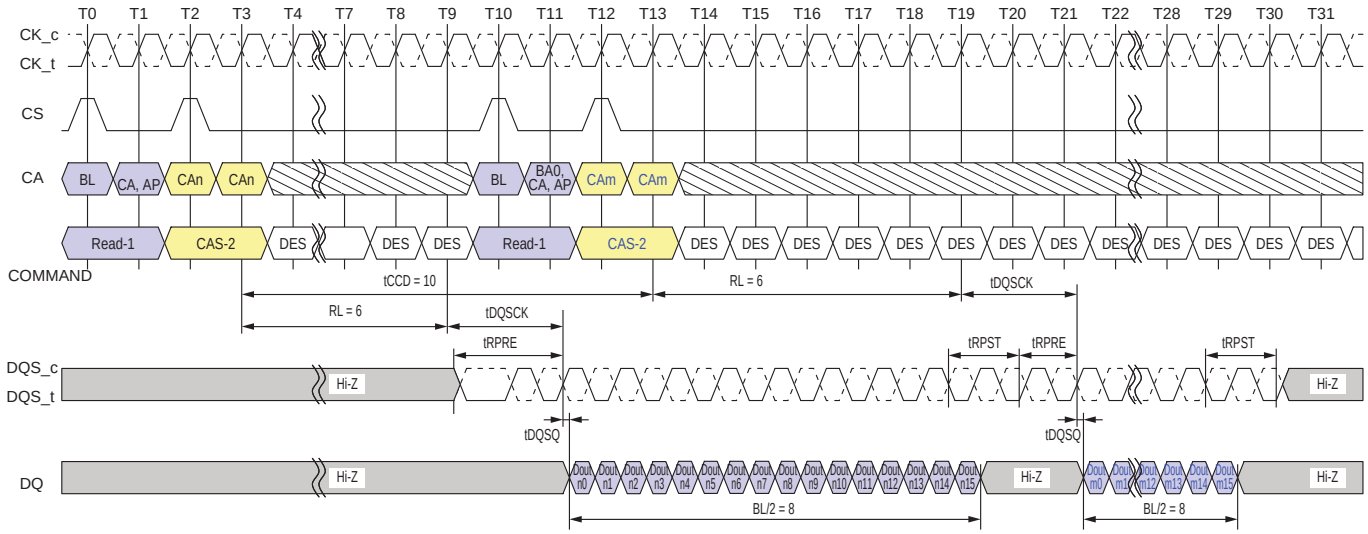

Note
1. BL = 16 for column n and column m, RL = 6, Preamble = Toggle, Postamble = 1.5nCK
2. Dout n/m = data-out from column n and column m.
3. DES commands are shown for ease of illustration; other commands may be valid at these times.

DON'T CARE TIME BREAK

Figure 4.24 — Consecutive Reads Operation: tCCD = Min +2, Preamble = Toggle, 1.5nCK Postamble

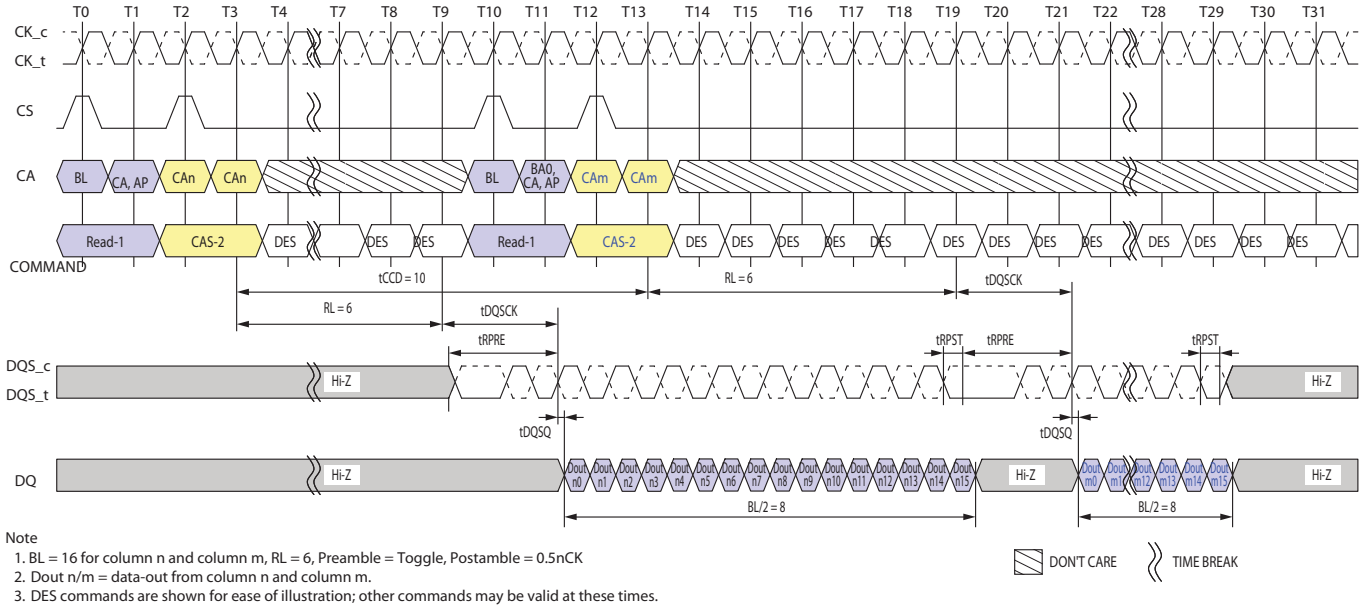

Note
1. BL = 16 for column n and column m, RL = 6, Preamble = Toggle, Postamble = 0.5nCK
2. Dout n/m = data-out from column n and column m.
3. DES commands are shown for ease of illustration; other commands may be valid at these times.

Figure 4.25 **— Consecutive Reads Operation: tCCD = Min +2, Preamble = Toggle, 0.5nCK Postamble**

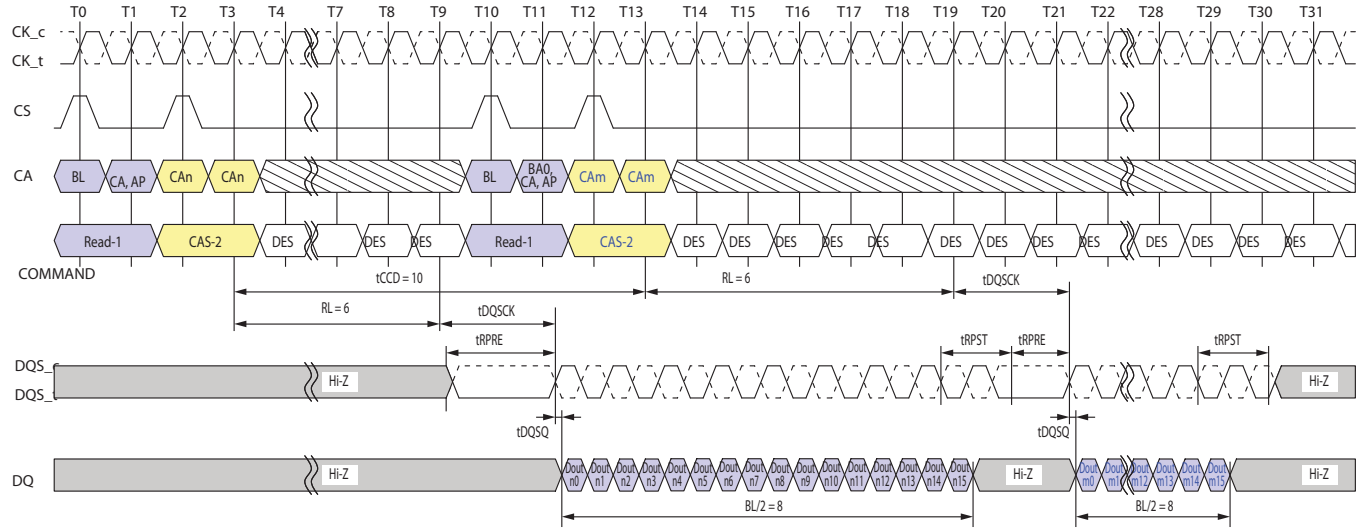

Note
1. BL = 16 for column n and column m, RL = 6, Preamble = Static, Postamble = 1.5nCK
2. Dout n/m = data-out from column n and column m.
3. DES commands are shown for ease of illustration; other commands may be valid at these times.

Figure 4.26 **— Consecutive Reads Operation: tCCD = Min +2, Preamble = Static, 1.5nCK Postamble**

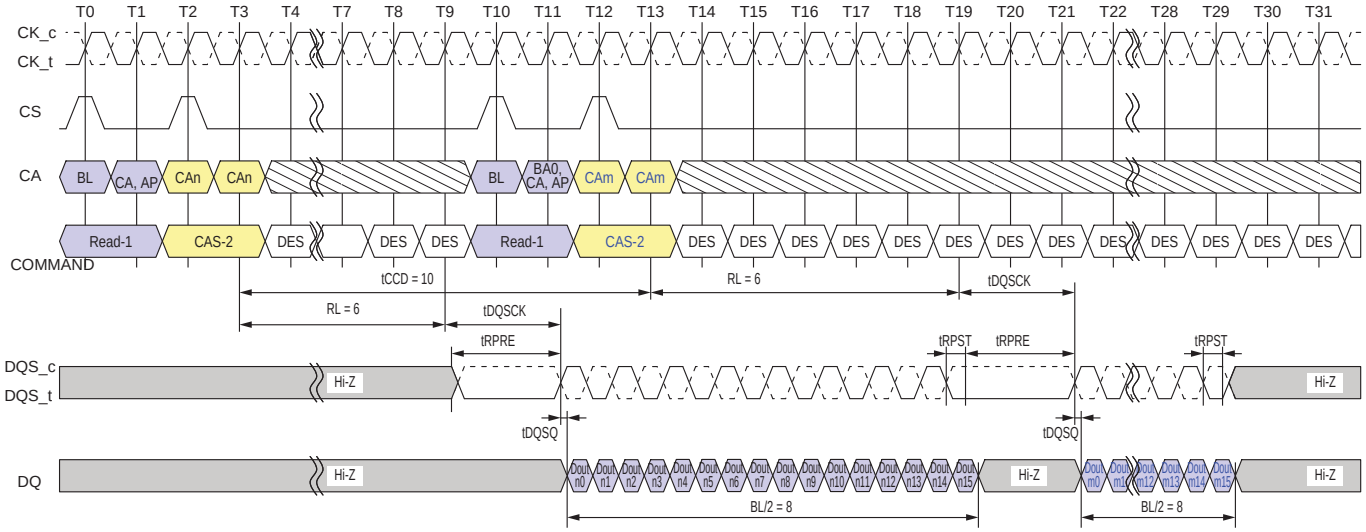

Note
1. BL = 16 for column n and column m, RL = 6, Preamble = Static, Postamble = 0.5nCK
2. Dout n/m = data-out from column n and column m.
3. DES commands are shown for ease of illustration; other commands may be valid at these times.

DON'T CARE TIME BREAK

Figure 4.27 — Consecutive Reads Operation: tCCD = Min +2, Preamble = Static, 0.5nCK Postamble

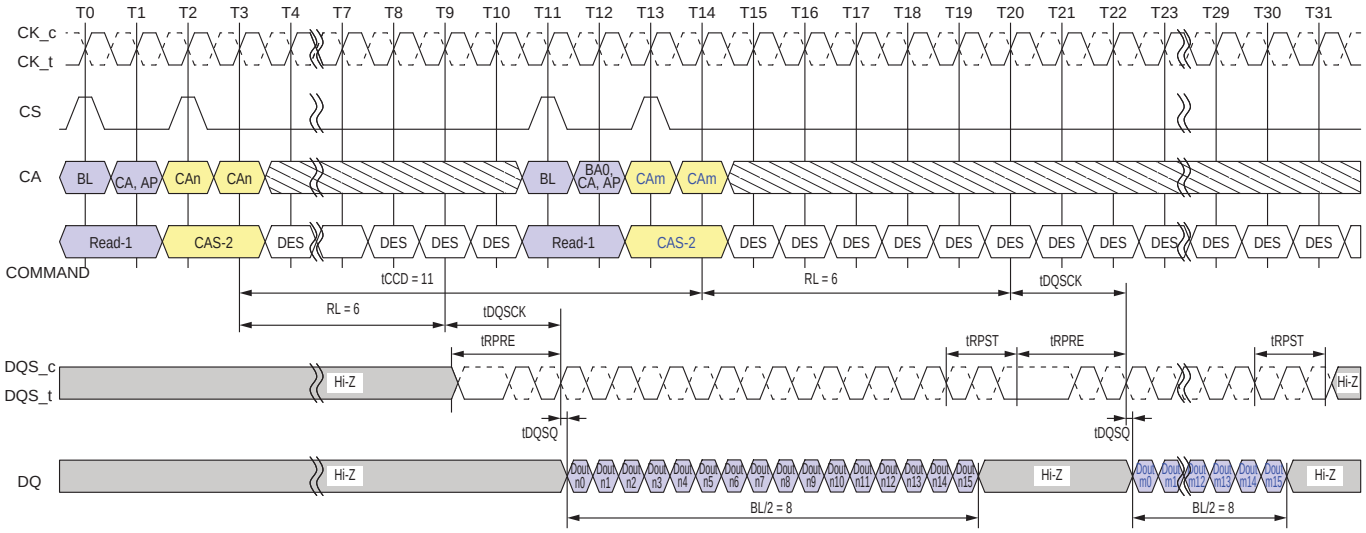

Note
1. BL = 16 for column n and column m, RL = 6, Preamble = Toggle, Postamble = 1.5nCK
2. Dout n/m = data-out from column n and column m.
3. DES commands are shown for ease of illustration; other commands may be valid at these times.

DON'T CARE TIME BREAK

Figure 4.28 — Consecutive Reads Operation: tCCD = Min +3, Preamble = Toggle, 1.5nCK Postamble

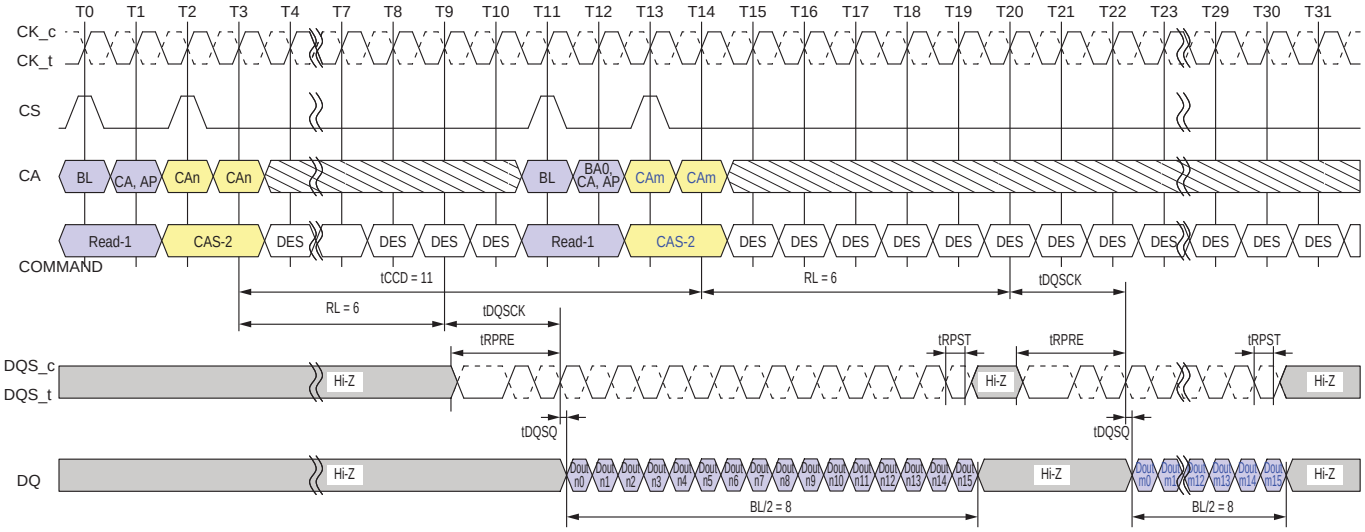

Note
1. BL = 16 for column n and column m, RL = 6, Preamble = Toggle, Postamble = 0.5nCK
2. Dout n/m = data-out from column n and column m.
3. DES commands are shown for ease of illustration; other commands may be valid at these times.

DON'T CARE TIME BREAK

Figure 4.29 — Consecutive Reads Operation: tCCD = Min +3, Preamble = Toggle, 0.5nCK Postamble

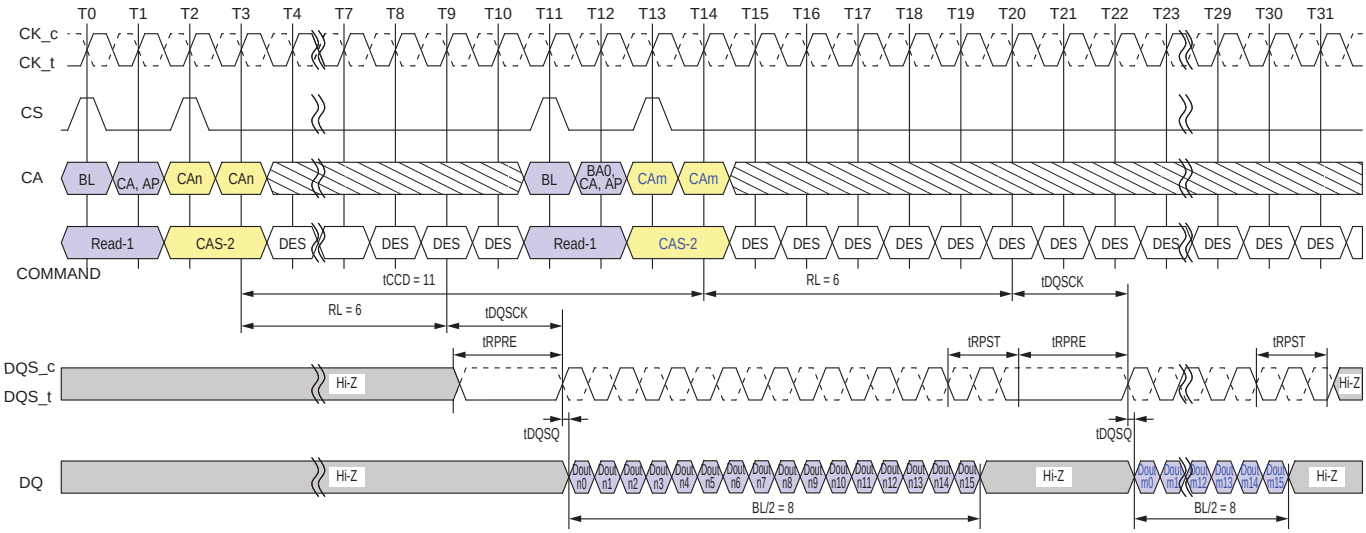

Note
1. BL = 16 for column n and column m, RL = 6, Preamble = Static, Postamble = 1.5nCK
2. Dout n/m = data-out from column n and column m.
3. DES commands are shown for ease of illustration; other commands may be valid at these times.

DON'T CARE TIME BREAK

Figure 4.30 — Consecutive Reads Operation: tCCD = Min +3, Preamble = Static, 1.5nCK Postamble

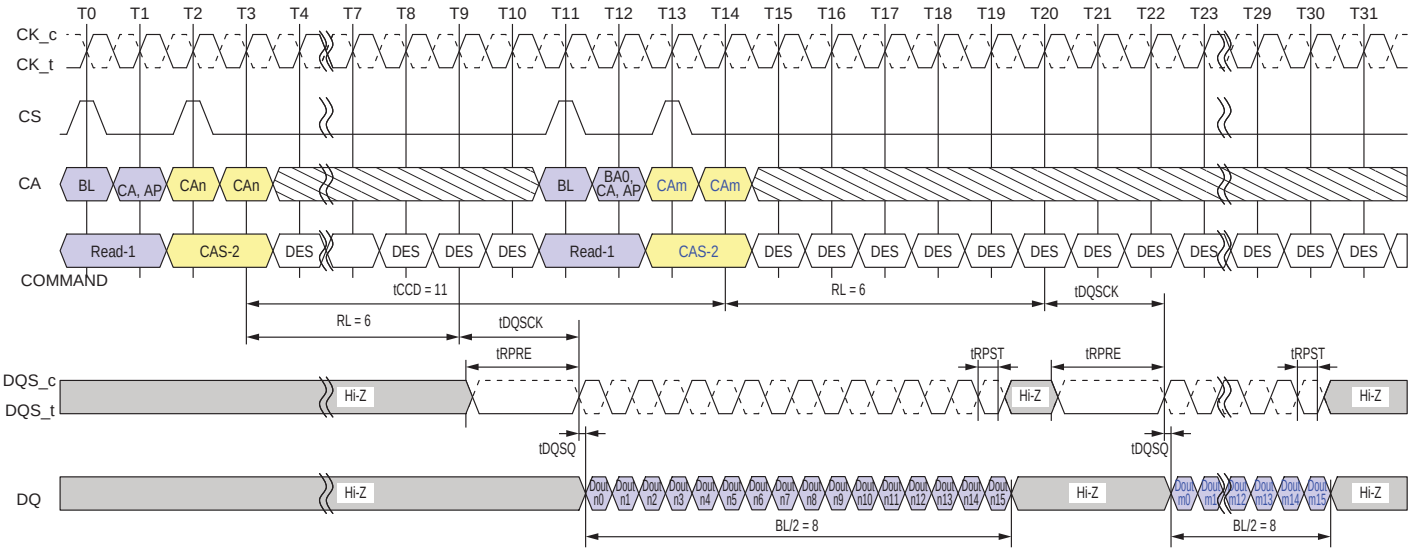

Note
1. BL = 16 for column n and column m, RL = 6, Preamble = Static, Postamble = 0.5nCK
2. Dout n/m = data-out from column n and column m.
3. DES commands are shown for ease of illustration; other commands may be valid at these times.

DON'T CARE TIME BREAK

Figure 4.31 — Consecutive Reads Operation: tCCD = Min +3, Preamble = Static, 0.5nCK Postamble

4.13.2 Write to Write Operation

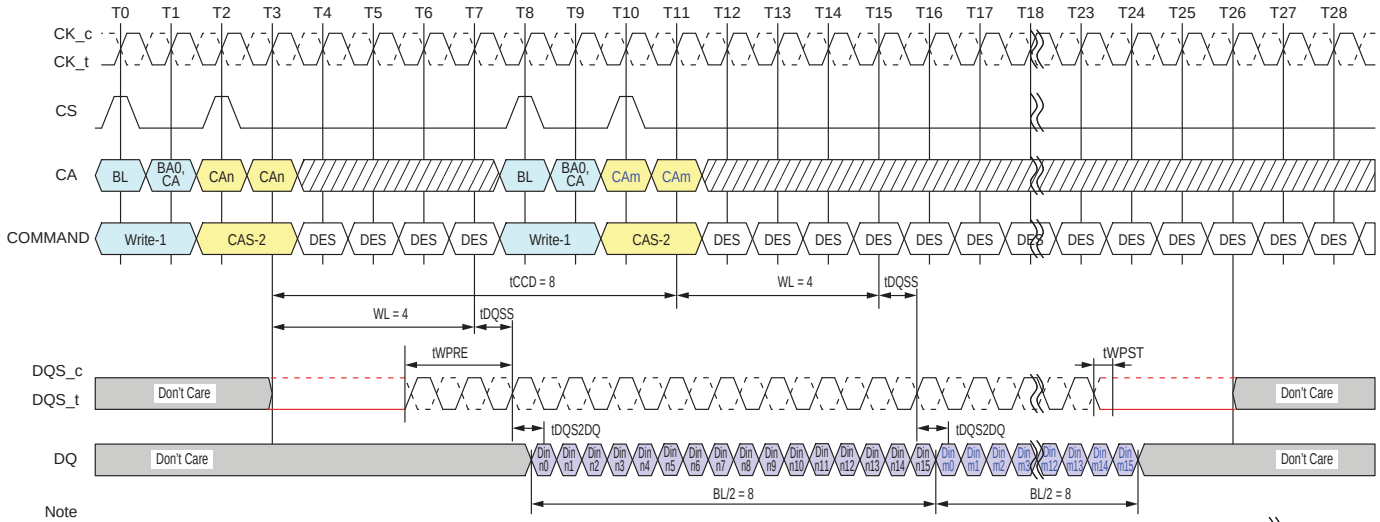

Note
1. BL=16, Write Postamble = 0.5nCK
2. Dout n/m = data-in to column n and column m.
3. The minimum number of clock cycles from the burst write command to the burst write command for any bank is BL/2
4. DES commands are shown for ease of illustration; other commands may be valid at these times.

Figure 4.32 — Seamless Writes Operation: tCCD = Min, 0.5nCK Postamble

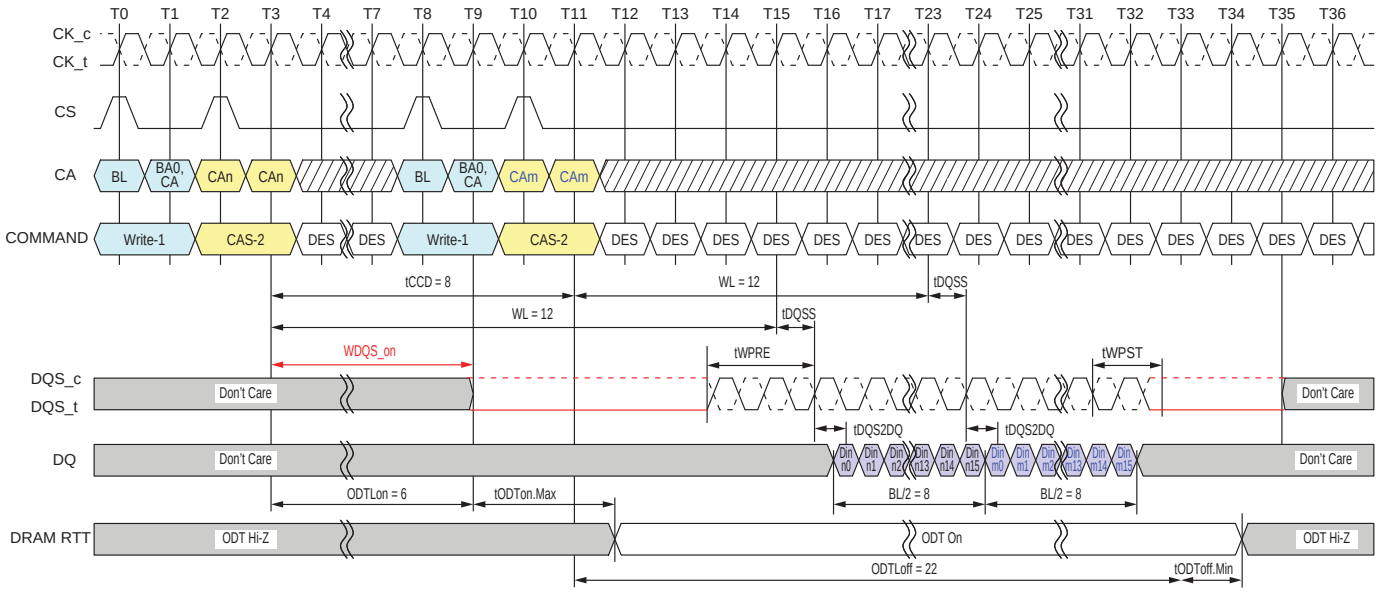

Note
1. Clock Frequency = 800MHz, tCK(AVG) = 1.25ns
2. BL=16, Write Postamble = 1.5nCK
3. Dout n/m = data-in to column n and column m.
3. The minimum number of clock cycles from the burst write command to the burst write command for any bank is BL/2
4. DES commands are shown for ease of illustration; other commands may be valid at these times.

Figure 4.33 — Seamless Writes Operation: tCCD = Min, 1.5nCK Postamble, 533MHz < Clock Freq. ≤ 800MHz, ODT Worst Timing Case

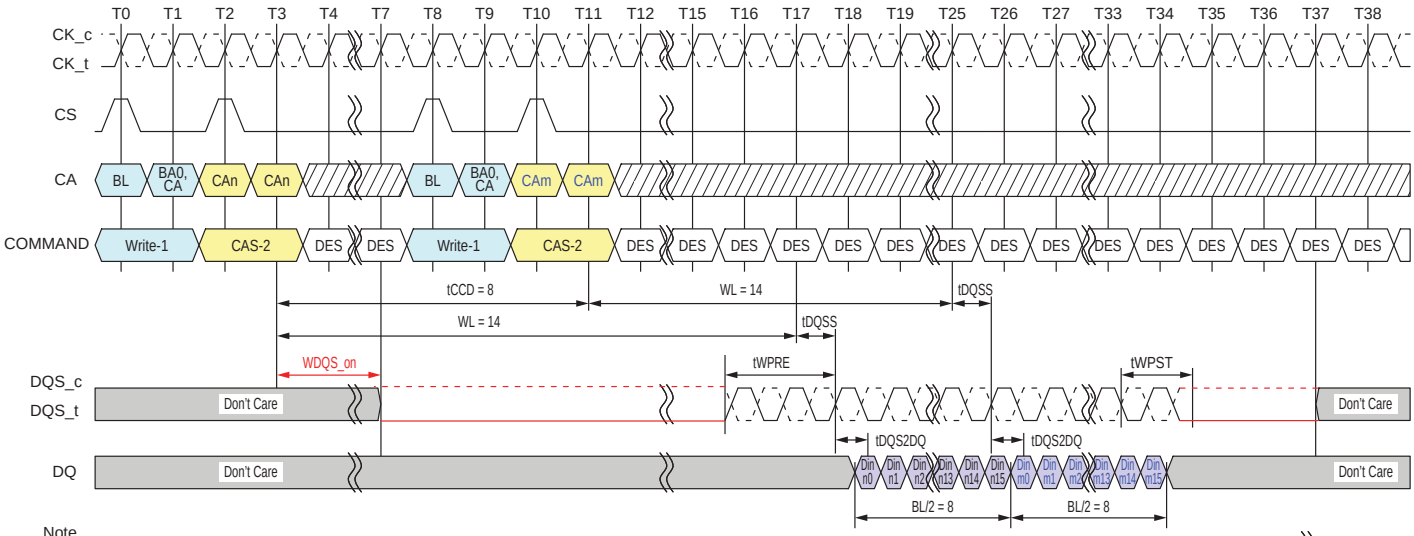

Note
1. BL=16, Write Postamble = 1.5nCK
2. Dout n/m = data-in to column n and column m.
3. The minimum number of clock cycles from the burst write command to the burst write command for any bank is BL/2
4. DES commands are shown for ease of illustration; other commands may be valid at these times.

Figure 4.34 — Seamless Writes Operation: tCCD = Min, 1.5nCK Postamble

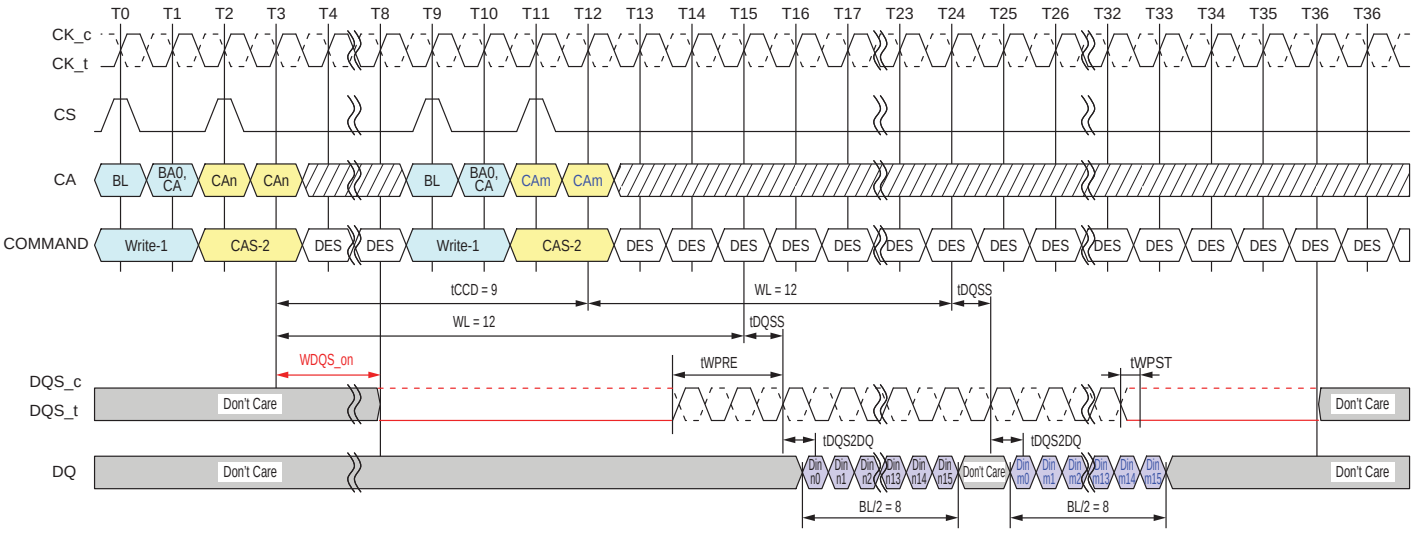

Note
1. BL=16, Write Postamble = 0.5nCK
2. Dout n/m = data-in to column n and column m.
3. DES commands are shown for ease of illustration; other commands may be valid at these times.

Figure 4.35 — Consecutive Writes Operation: tCCD = Min + 1, 0.5nCK Postamble

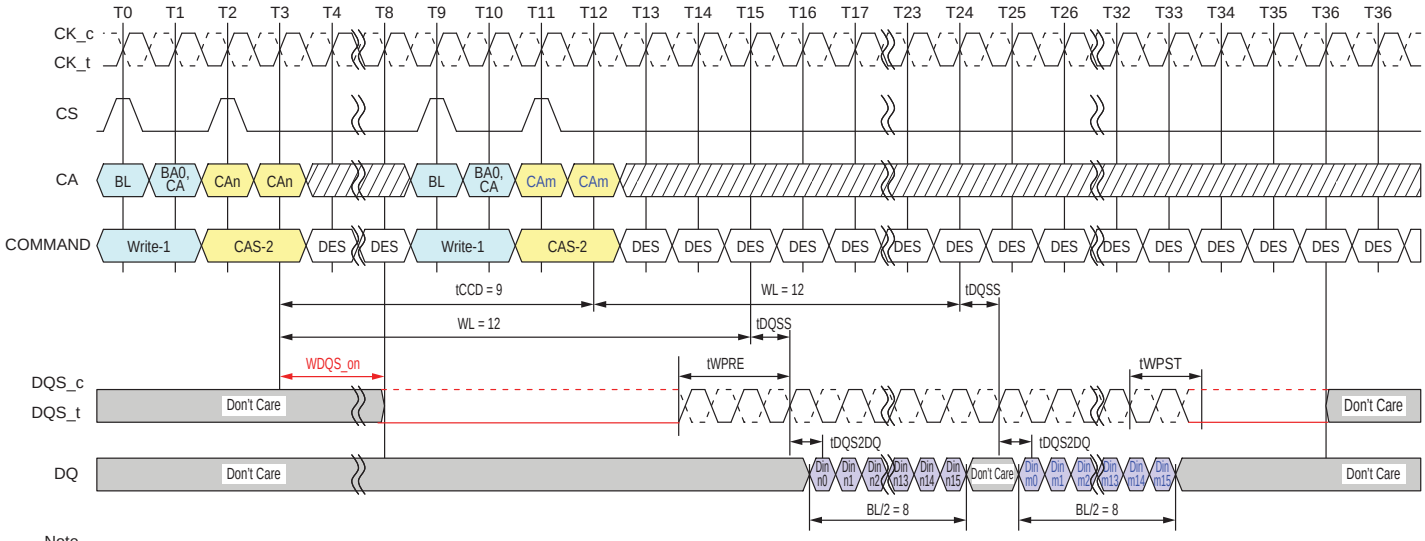

Note
1. BL=16, Write Postamble = 1.5nCK
2. Dout n/m = data-in to column n and column m.
3. DES commands are shown for ease of illustration; other commands may be valid at these times.

Figure 4.36 — Consecutive Writes Operation: tCCD = Min + 1, 1.5nCK Postamble

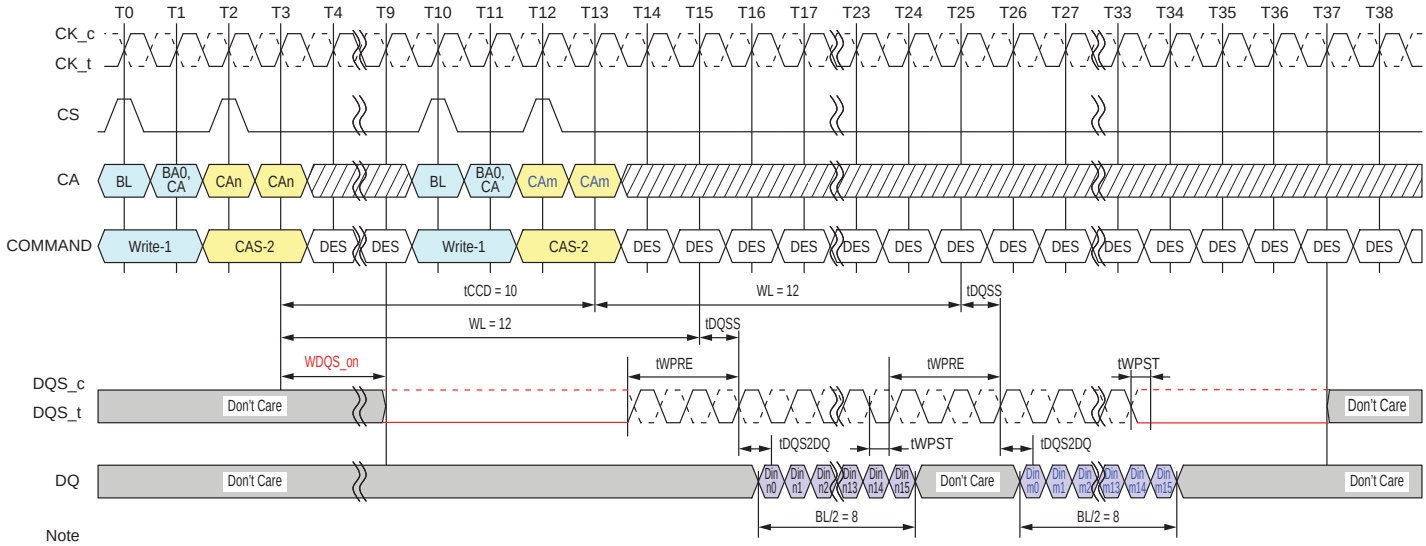

Note
1. BL=16, Write Postamble = 0.5nCK
2. Dout n/m = data-in to column n and column m.
3. DES commands are shown for ease of illustration; other commands may be valid at these times.

Figure 4.37 — Consecutive Writes Operation: tCCD = Min + 2, 0.5nCK Postamble

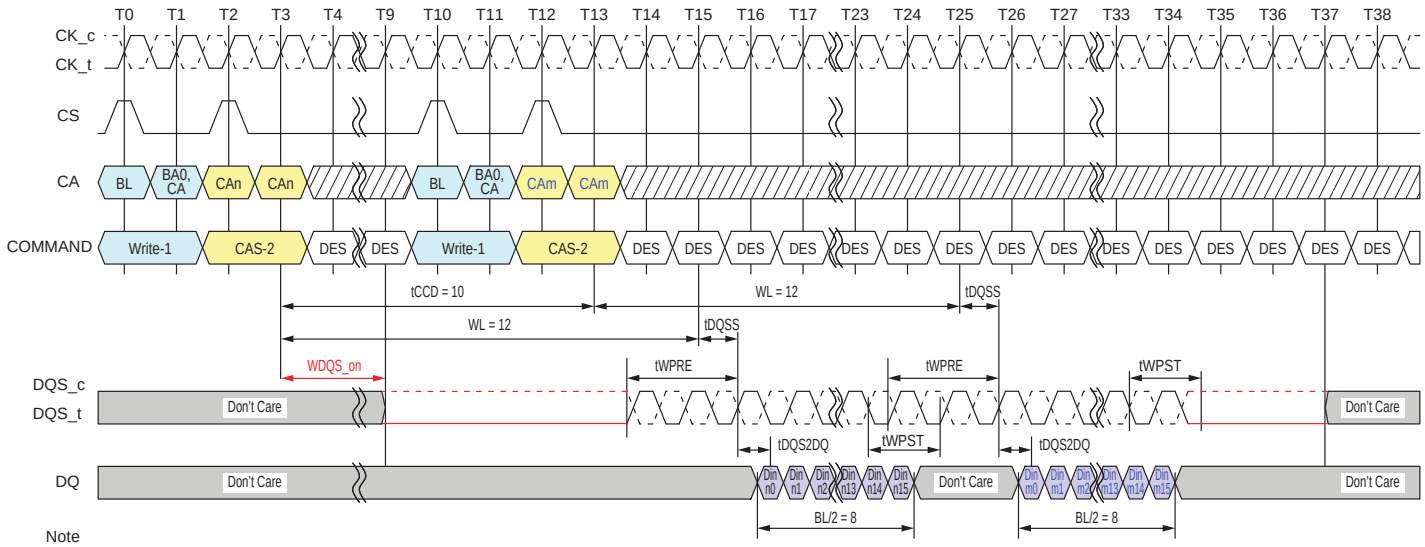

Note
1. BL=16, Write Postamble = 1.5nCK
2. Dout n/m = data-in to column n and column m.
3. DES commands are shown for ease of illustration; other commands may be valid at these times.

DON'T CARE TIME BREAK

Figure 4.38 — Consecutive Writes Operation: tCCD = Min + 2, 1.5nCK Postamble

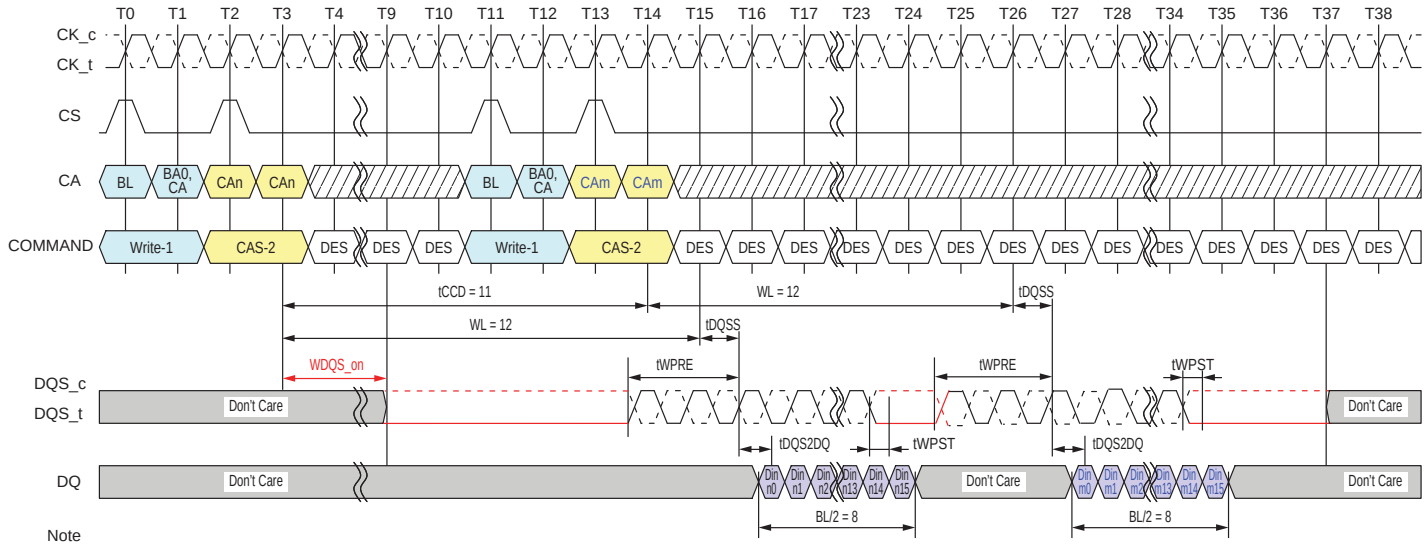

Note
1. BL=16, Write Postamble = 0.5nCK
2. Dout n/m = data-in to column n and column m.
3. DES commands are shown for ease of illustration; other commands may be valid at these times.

DON'T CARE TIME BREAK

Figure 4.39 — Consecutive Writes Operation: tCCD = Min + 3, 0.5nCK Postamble

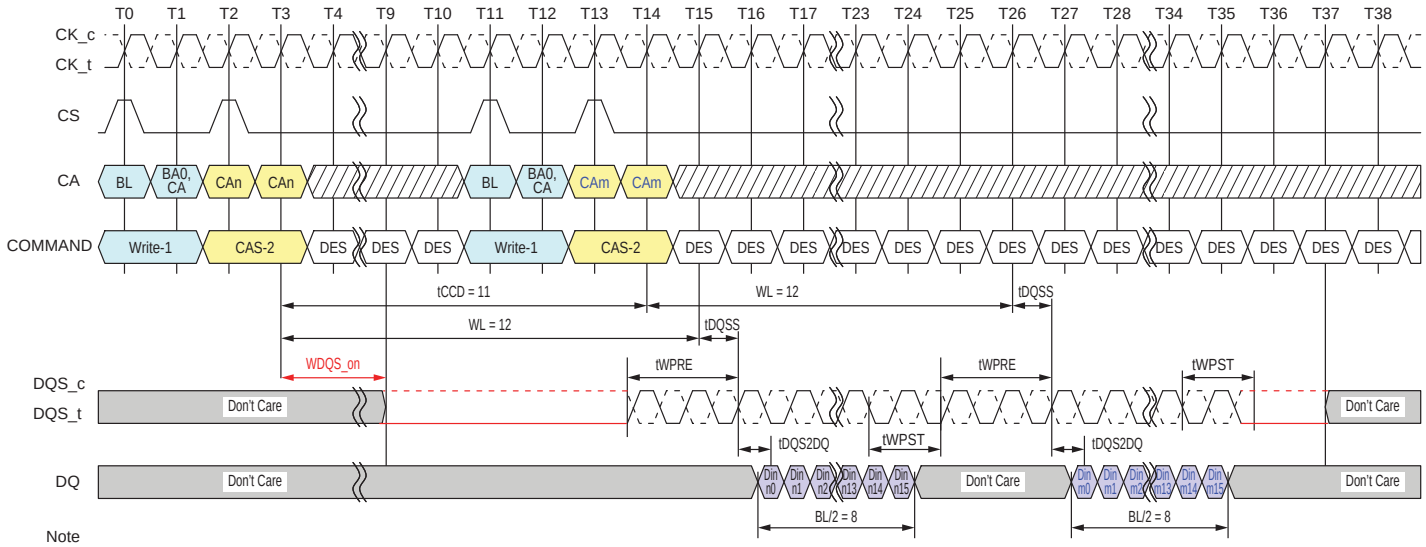

Note
1. BL=16, Write Postamble = 1.5nCK
2. Dout n/m = data-in to column n and column m.
3. DES commands are shown for ease of illustration; other commands may be valid at these times.

Figure 4.40— Consecutive Writes Operation: tCCD = Min + 3, 1.5nCK Postamble

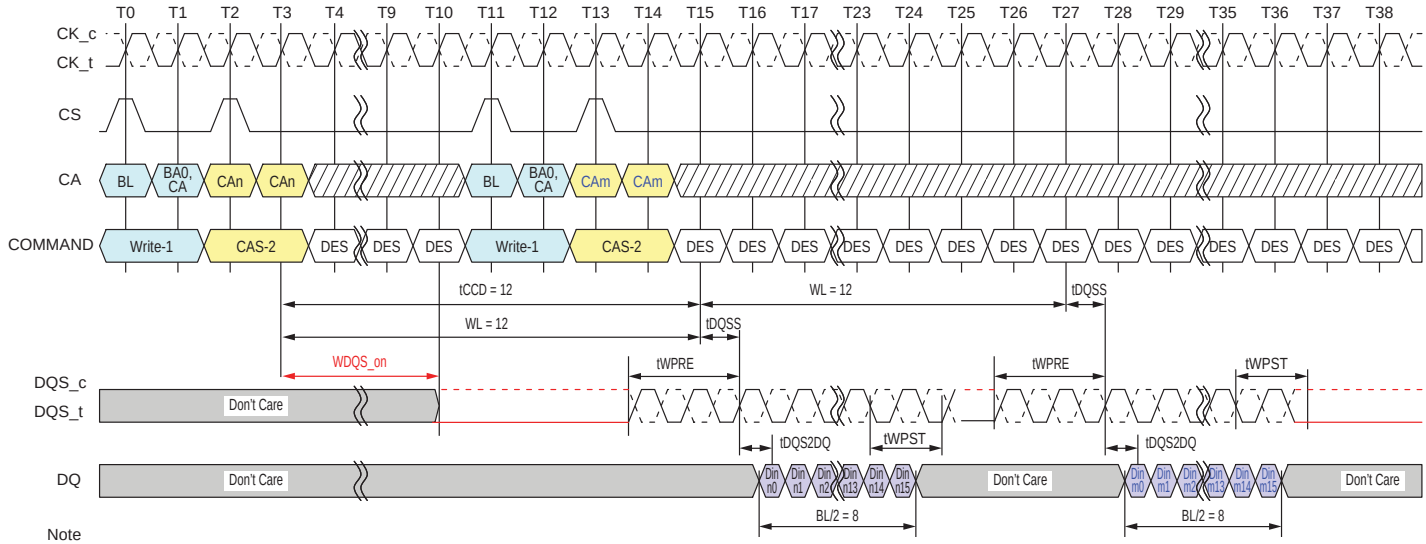

Note
1. BL=16, Write Postamble = 1.5nCK
2. Dout n/m = data-in to column n and column m.
3. DES commands are shown for ease of illustration; other commands may be valid at these times.

Figure 4.41 — Consecutive Writes Operation: tCCD = Min + 4, 1.5nCK Postamble

4.14 Masked Write Operation

The LPDDR4-SDRAM requires that Write operations which include a byte mask anywhere in the burst sequence must use the Masked Write command. This allows the DRAM to implement efficient data protection schemes based on larger data blocks. The Masked Write-1 command is used to begin the operation, followed by a CAS-2 command. A Masked Write command to the same bank cannot be issued until tCCDMW later, to allow the LPDDR4-SDRAM to finish the internal Read-Modify-Write. One Data Mask-Invert (DMI) pin is provided per byte lane, and the Data Mask-Invert timings match data bit (DQ) timing. See the section on "Data Mask Invert" for more information on the use of the DMI signal.

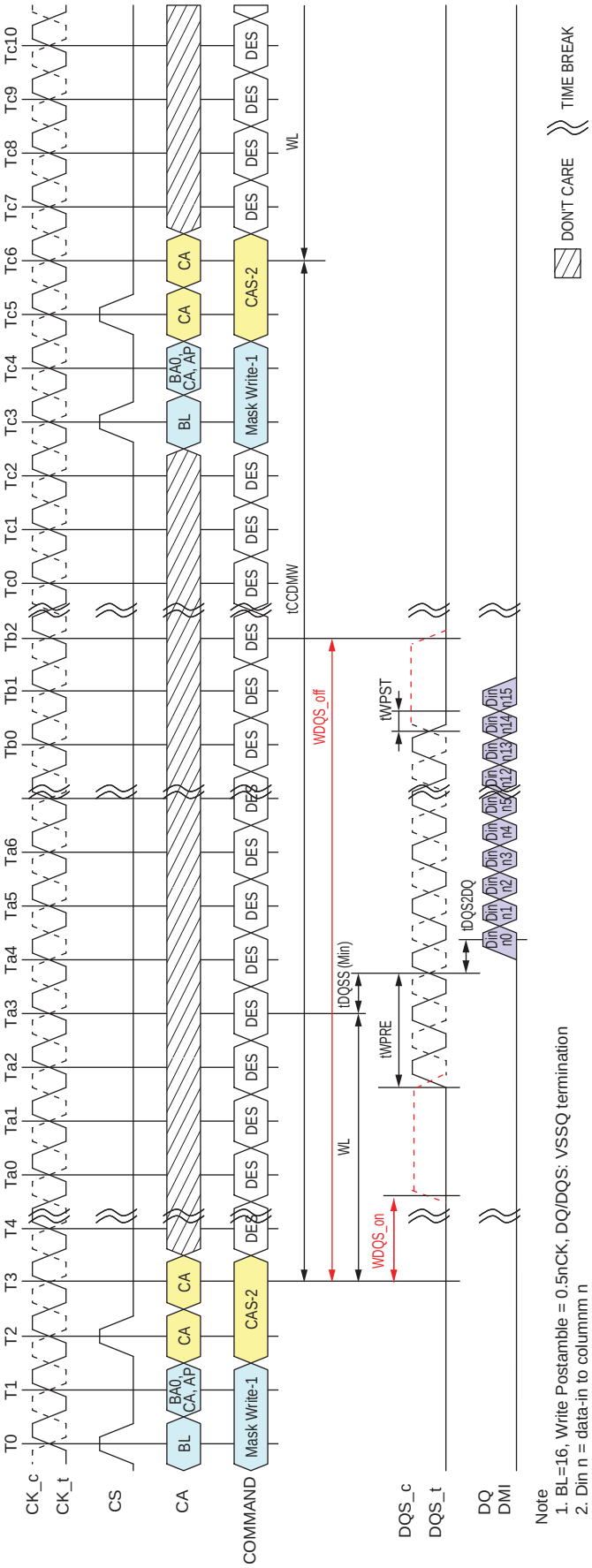

Note
1. BL=16, Write Postamble = 0.5nCK, DQ/DQS: VSSQ termination
2. Din n = data-in to columnm n
3. Mask-Write supports only BL16 operations. For BL32 configuration, the system needs to insert only 16 bit wide data for masked write operation.
4. DES commands are shown for ease of illustration; other commands may be valid at these time.

Figure 4.42 — Masked Write Command - Same Bank

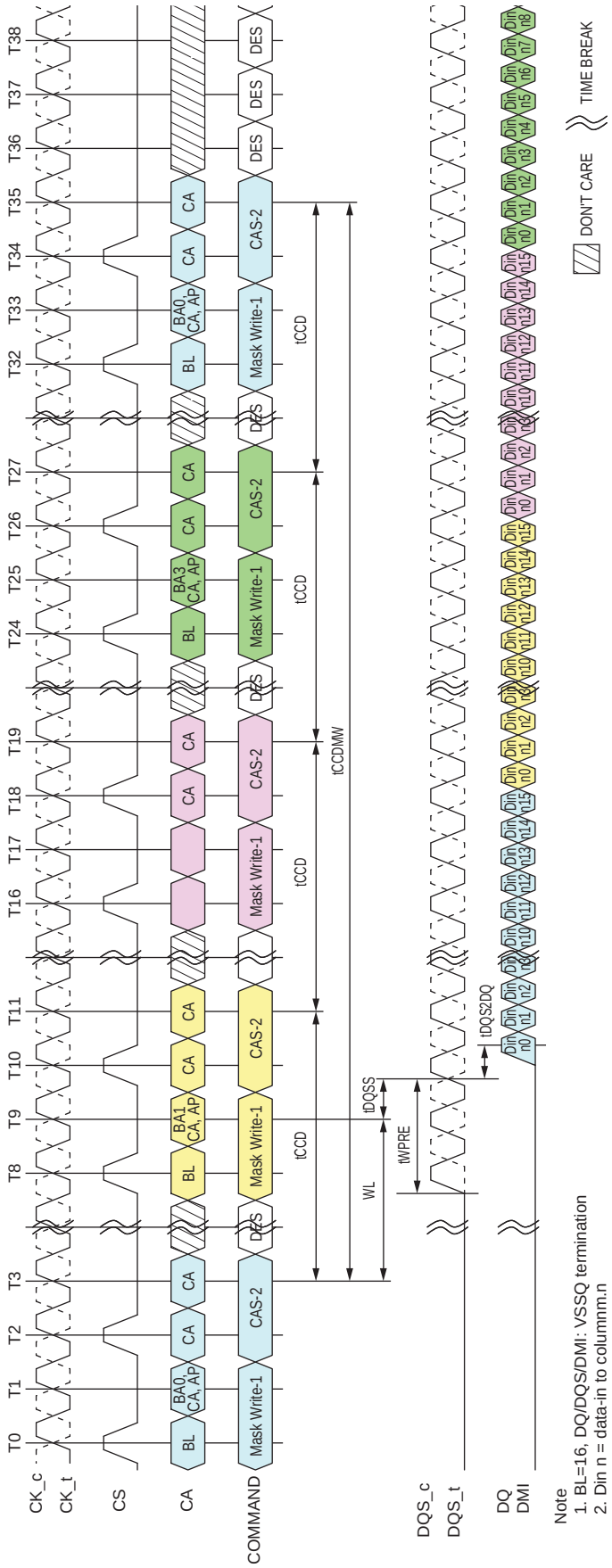

Note
1. BL=16, DQ/DQS/DMI: VSSQ termination
2. Din n = data-in to columnm.n
3. Mask-Write supports only BL16 operations. For BL32 configuration, the system needs to insert only 16 bit wide data for masked write operation.
4. DES commands are shown for ease of illustration; other commands may be valid at these time.

Figure 4.43 — Masked Write Command - Different Bank

4.14.1 Masked Write Timing constraints for BL16

Table 4.11a — Timing constraints for Same bank: DQ ODT is Disabled

Next CMD / Current CMD	Active	Read (BL=16 or 32)	Write (BL=16 or 32)	Masked Write	Precharge
Active	illegal	RU(tRCD/tCK)	RU(tRCD/tCK)	RU(tRCD/tCK)	RU(tRAS/tCK)
Read with BL = 16	illegal	8[1)]	RL+RU(tDQSCK(max)/tCK) +BL/2- WL+tWPRE+RD(tRPST)	RL+RU(tDQSCK(max)/tCK) +BL/2- WL+tWPRE+RD(tRPST)	BL/2+max{(8,RU(tRTP/tCK)}-8
Read with BL = 32	illegal	16[2)]	RL+RU(tDQSCK(max)/tCK) +BL/2- WL+tWPRE+RD(tRPST)	RL+RU(tDQSCK(max)/tCK) +BL/2- WL+tWPRE+RD(tRPST)	BL/2+max{(8,RU(tRTP/tCK)}-8
Write with BL = 16	illegal	WL+1+BL/2 +RU(tWTR/tCK)	8[1)]	tCCDMW[3)]	WL+ 1 + BL/2+RU(tWR/tCK)
Write with BL = 32	illegal	WL+1+BL/2 +RU(tWTR/tCK)	16[2)]	tCCDMW +8[4)]	WL+ 1 + BL/2+RU(tWR/tCK)
Masked Write	illegal	WL+1+BL/2 +RU(tWTR/tCK)	tCCD	tCCDMW[3)]	WL+ 1 + BL/2 +RU(tWR/tCK)
Precharge	RU(tRP/tCK), RU(tRPab/tCK)	illegal	illegal	illegal	4

NOTE 1 In the case of BL = 16, tCCD is 8*tCK.
NOTE 2 In the case of BL = 32, tCCD is 16*tCK.
NOTE 3 tCCDMW = 32*tCK (4*tCCD at BL=16)
NOTE 4 Write with BL=32 operation has 8*tCK longer than BL =16.
NOTE 5 tRPST values depend on MR1-OP[7] respectively.

Table 4.11b — Timing constraints for Same bank: DQ ODT is Enabled

Next CMD / Current CMD	Active	Read (BL=16 or 32)	Write (BL=16 or 32)	Masked Write	Precharge
Read with BL = 16	illegal	8[1)]	RL+RU(tDQSCK(max)/tCK)+BL/ 2+RD(tRPST)-ODTLon- RD(tODTon,min/tCK)+1	RL+RU(tDQSCK(max)/tCK)+BL/ 2+RD(tRPST)-ODTLon- RD(tODTon,min/tCK)+1	BL/2+max{(8,RU(tRTP/tCK)}-8
Read with BL = 32	illegal	16[2)]	RL+RU(tDQSCK(max)/tCK)+BL/ 2+RD(tRPST)-ODTLon- RD(tODTon,min/tCK)+1	RL+RU(tDQSCK(max)/tCK)+BL/ 2+RD(tRPST)-ODTLon- RD(tODTon,min/tCK)+1	BL/2+max{(8,RU(tRTP/tCK)}-8

NOTE 1 In the case of BL = 16, tCCD is 8*tCK.
NOTE 2 In the case of BL = 32, tCCD is 16*tCK.
NOTE 3 The rest of the timing is same as DQ ODT is Disable case.
NOTE 4 tRPST values depend on MR1-OP[7] respectively.

4.14.1 Masked Write Timing constraints for BL16 (Cont'd)

Table 4.12a — Timing constraints for Different bank: DQ ODT is Disabled

Next CMD / Current CMD	Active	Read (BL=16 or 32)	Write (BL=16 or 32)	Masked Write	Precharge
Active	RU(tRRD/tCK)	4	4	4	2
Read with BL = 16	4	8[1)]	RL+RU(tDQSCK(max)/tCK) +BL/2- WL+tWPRE+RD(tRPST)	RL+RU(tDQSCK(max)/tCK) +BL/2- WL+tWPRE+RD(tRPST)	2
Read with BL = 32	4	16[2)]	RL+RU(tDQSCK(max)/tCK) +BL/2- WL+tWPRE+RD(tRPST)	RL+RU(tDQSCK(max)/tCK) +BL/2- WL+tWPRE+RD(tRPST)	2
Write with BL = 16	4	WL+1+BL/2 +RU(tWTR/tCK)	8[1)]	8[1)]	2
Write with BL = 32	4	WL+1+BL/2 +RU(tWTR/tCK)	16[2)]	16[2)]	2
Masked Write	4	WL+1+BL/2 +RU(tWTR/tCK)	8[1)]	8[1)]	2
Precharge	4	4	4	4	4

NOTE 1 In the case of BL = 16, tCCD is 8*tCK.
NOTE 2 In the case of BL = 32, tCCD is 16*tCK.
NOTE 3 tRPST values depend on MR1-OP[7] respectively.

Table 4.12b — Timing constraints for Different bank: DQ ODT is Enabled

Next CMD / Current CMD	Active	Read (BL=16 or 32)	Write (BL=16 or 32)	Masked Write	Precharge
Read with BL = 16	4	8[1)]	RL+RU(tDQSCK(max)/tCK)+BL/ 2+RD(tRPST)-ODTLon- RD(tODTon,min/tCK)+1	RL+RU(tDQSCK(max)/tCK)+BL/ 2+RD(tRPST)-ODTLon- RD(tODTon,min/tCK)+1	2
Read with BL = 32	4	16[2)]	RL+RU(tDQSCK(max)/tCK)+BL/ 2+RD(tRPST)-ODTLon- RD(tODTon,min/tCK)+1	RL+RU(tDQSCK(max)/tCK)+BL/ 2+RD(tRPST)-ODTLon- RD(tODTon,min/tCK)+1	2

NOTE 1 In the case of BL = 16, tCCD is 8*tCK.
NOTE 2 In the case of BL = 32, tCCD is 16*tCK.
NOTE 3 The rest of the timing is same as DQ ODT is Disable case.
NOTE 4 tRPST values depend on MR1-OP[7] respectively.

4.15 LPDDR4 Data Mask (DM) and Data Bus Inversion (DBIdc) Function

LPDDR4 SDRAM supports the function of Data Mask and Data Bus inversion. Its details are shown below.

- LPDDR4 device supports Data Mask (DM) function for Write operation.
- LPDDR4 device supports Data Bus Inversion (DBIdc) function for Write and Read operation.
- LPDDR4 supports DM and DBIdc function with a byte granularity.
- DBIdc function during Write or Masked Write can be enabled or disabled through MR3 OP[7].
- DBIdc function during Read can be enabled or disabled through MR3 OP[6].
- DM function during Masked Write can be enabled or disabled through MR13 OP[5].
- LPDDR4 device has one Data Mask Inversion (DMI) signal pin per byte; total of 2 DMI signals per channel.
- DMI signal is a bi-directional DDR signal and is sampled along with the DQ signals for Read and Write or Masked Write operation.

There are eight possible combinations for LPDDR4 device with DM and DBIdc function. Table 4.13 describes the functional behavior for all combinations.

Table 4.13 — Function Behavior of DMI Signal During Write, Masked Write and Read Operation

DM Function	Write DBIdc Function	Read DBIdc Function	DMI Signal during Write Command	Signal during Masked Write Command	DMI Signal During Read	DMI Signal during MPC WR FIFO	DMI Signal during MPC RD FIFO	DMI Signal during MPC DQ Read Training	DMI Signal During MRR
Disable	Disable	Disable	Notes: 1	Notes: 1, 3	Notes: 2	Note: 1	Note: 2	Note: 2	Notes: 2
Disable	Enable	Disable	Notes: 4	Notes: 3	Notes: 2	Note: 9	Note: 10	Note: 11	Notes: 2
Disable	Disable	Enable	Notes: 1	Notes: 3	Notes: 5	Note: 9	Note: 10	Note: 11	Notes: 12
Disable	Enable	Enable	Notes: 4	Notes: 3	Notes: 5	Note: 9	Note: 10	Note: 11	Notes: 12
Enable	Disable	Disable	Notes: 6	Notes: 7	Notes: 2	Note: 9	Note: 10	Note: 11	Notes: 2
Enable	Enable	Disable	Notes: 4	Notes: 8	Notes: 2	Note: 9	Note: 10	Note: 11	Notes: 2
Enable	Disable	Enable	Notes: 6	Notes: 7	Notes: 5	Note: 9	Note: 10	Note: 11	Notes: 12
Enable	Enable	Enable	Notes: 4	Notes: 8	Notes: 5	Note: 9	Note: 10	Note: 11	Notes: 12

Notes:

1. DMI input signal is a don't care. DMI input receivers are turned OFF.
2. DMI output drivers are turned OFF.
3. Masked Write Command is not allowed and is considered an illegal command as DM function is disabled.
4. DMI signal is treated as DBI signal and it indicates whether DRAM needs to invert the Write data received on DQs within a byte. The LPDDR4 device inverts Write data received on the DQ inputs in case DMI was sampled HIGH, or leaves the Write data non-inverted in case DMI was sampled LOW.
5. The LPDDR4 DRAM inverts Read data on its DQ outputs associated within a byte and drives DMI signal HIGH when the number of ‘1’ data bits within a given byte lane is greater than four; otherwise the DRAM does not invert the read data and drives DMI signal LOW.
6. The LPDDR4 DRAM does not perform any mask operation when it receives Write command. During the Write burst associated with Write command, DMI signal must be driven LOW.
7. The LPDDR4 DRAM requires an explicit Masked Write command for all masked write operations. DMI signal is treated as DM signal and it indicates which bit time within the burst is to be masked. When DMI signal is HIGH, DRAM masks that bit time across all DQs associated within a byte. All DQ input signals within a byte are don't care (either HIGH or LOW) when DMI signal is HIGH. When DMI signal is LOW, the LPDDR4 DRAM does not perform mask operation and data received on DQ input is written to the array.
8. The LPDDR4 DRAM requires an explicit Masked Write command for all masked write operations. The LPDDR4 device masks the Write data received on the DQ inputs if the total count of '1' data bits on DQ[2:7] or DQ[10:15] (for Lower Byte or Upper Byte respectively) is equal to or greater than five and DMI signal is LOW. Otherwise the LPDDR4 DRAM does not perform mask operation and treats it as a legal DBI pattern; DMI signal is treated as DBI signal and data received on DQ input is written to the array.
9. DMI signal is treated as a training pattern. The LPDDR4 DRAM does not perform any mask operation and does not invert Write data received on the DQ inputs.
10. DMI signal is treated as a training pattern. The LPDDR4 DRAM returns DMI pattern written in WR FIFO.
11. DMI signal is treated as a training pattern. For more details, see 4.28, RD DQ Calibration.
12. DBI may apply or may not apply during normal MRR. It's vendor specific. If read DBI is enable with MRS and vendor cannot support the DBI during MRR, DBI pin status should be low. If read DBI is enable with MRS and vendor can support the DBI during MRR, the LPDDR4 DRAM inverts Mode Register Read data on its DQ outputs associated within a byte and drives DMI signal HIGH when the number of ‘1’ data bits within a given byte lane is greater than four; otherwise the DRAM does not invert the read data and drives DMI signal LOW.

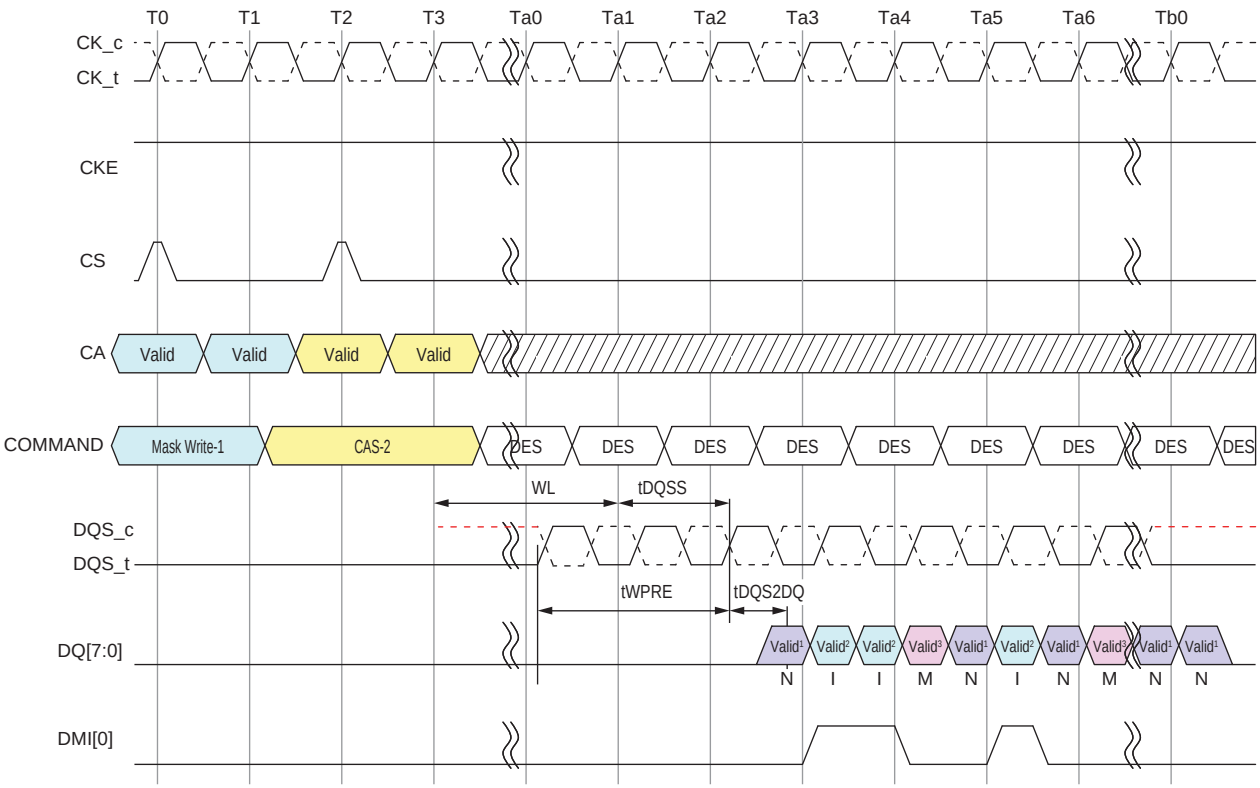

Valid¹ N — Input data is written to DRAM Cell.

Valid² I — Input data is inverted, then written to DRAM Cell.

Valid³ M — Input data is masked. The total count of '1' data bits on DQ[2:7] is equal to or greater than five.

NOTES : 1. Data Mask (DM) is Enable: MR13 OP [5] = 0, Data BUS Inversion (DBI) Write is Enable: MR3 OP[7] = 1

Figure 4.44 — Masked Write Command w/ Write DBI Enabled; DM Enabled

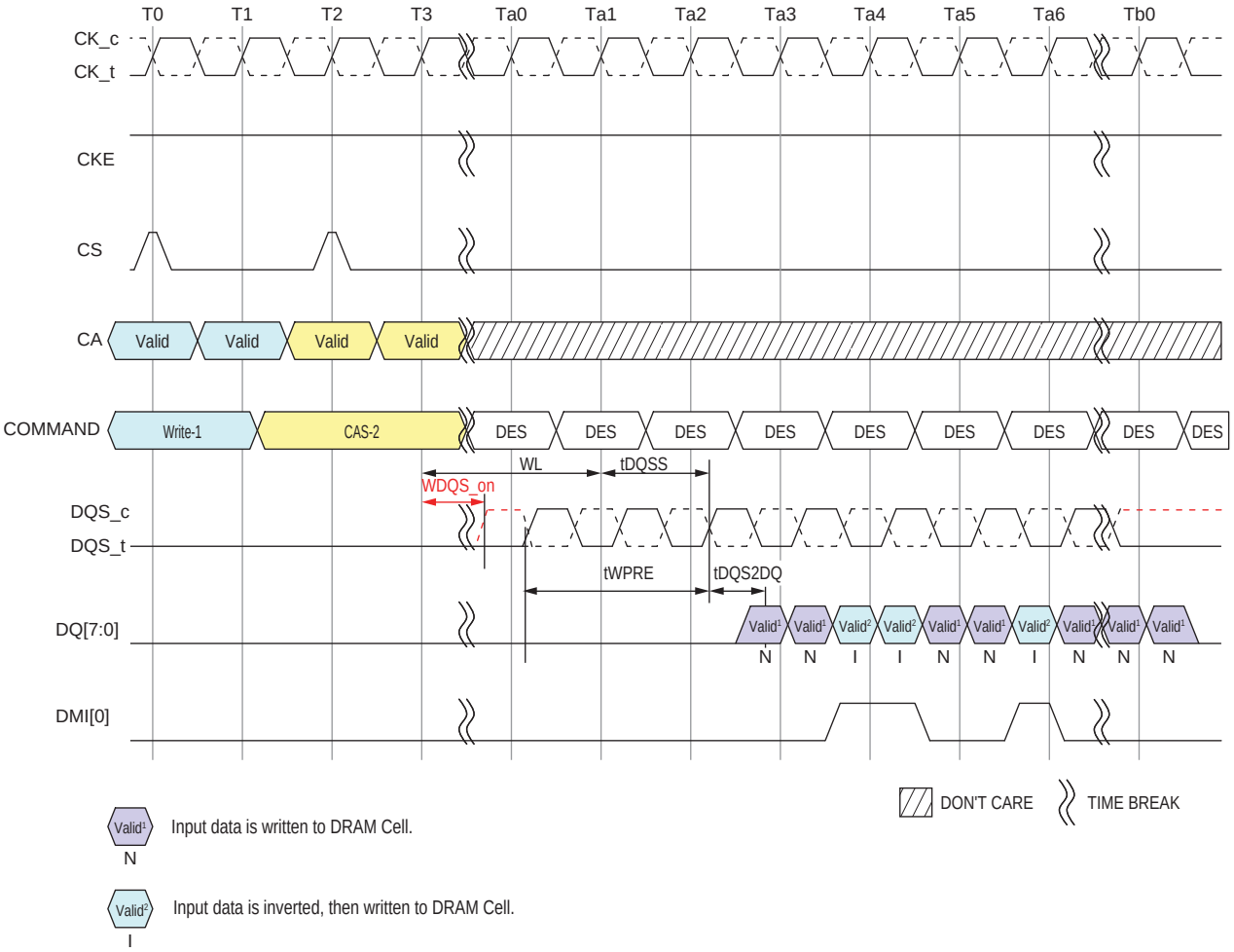

NOTES : 1. Data Mask (DM) is Disable: MR13 OP [5] = 1, Data BUS Inversion (DBI) Write is Enable: MR3 OP[7] = 1

Figure 4.45 — Write Command w/ Write DBI Enabled; DM Enabled

4.16 Pre-Charge Operation

The PRECHARGE command is used to precharge or close a bank that has been activated. The PRECHARGE command is initiated with CS, and CA[5:0] in the proper state as defined by Table 4.68. The PRECHARGE command can be used to precharge each bank independently or all banks simultaneously. The AB flag and the bank address bit are used to determine which bank(s) to precharge. The precharged bank(s) will be available for subsequent row access tRPab after an all-bank PRECHARGE command is issued, or tRPpb after a single-bank PRECHARGE command is issued.

To ensure that LPDDR4 devices can meet the instantaneous current demands, the row-precharge time for an all-bank PRECHARGE (tRPab) is longer than the perbank precharge time (tRPpb).

Table 4.14 — Precharge Bank Selection

AB (CA[5], R1)	BA2 (CA[2], R2)	BA1 (CA[1], R2)	BA0 (CA[0], R2)	Precharged Bank(s)
0	0	0	0	Bank 0 only
0	0	0	1	Bank 1 only
0	0	1	0	Bank 2 only
0	0	1	1	Bank 3 only
0	1	0	0	Bank 4 only
0	1	0	1	Bank 5 only
0	1	1	0	Bank 6 only
0	1	1	1	Bank 7 only
1	Valid	Valid	Valid	All Banks

4.16.1 Burst Read Operation Followed by a Precharge

The PRECHARGE command can be issued as early as BL/2 clock cycles after a READ command, but PRECHARGE cannot be issued until after tRAS is satisfied. A new bank ACTIVATE command can be issued to the same bank after the row PRECHARGE time (tRP) has elapsed. The minimum READ-to-PRECHARGE time must also satisfy a minimum analog time from the 2nd rising clock edge of the CAS-2 command. tRTP begins BL/2 - 8 clock cycles after the READ command. For LPDDR4 READ-to-PRE-CHARGE timings see Table 4.15.

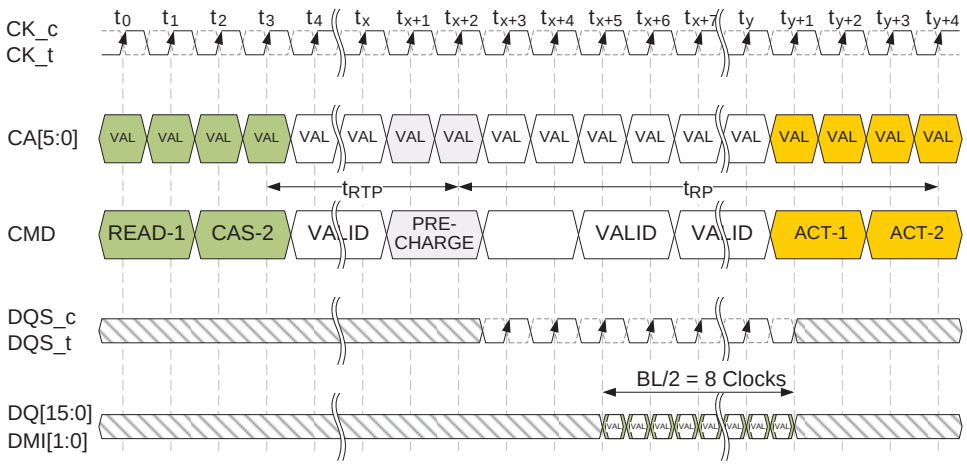

Figure 4.46 — Burst READ followed by PRECHARGE (Shown with BL16, 2tCK pre-amble)

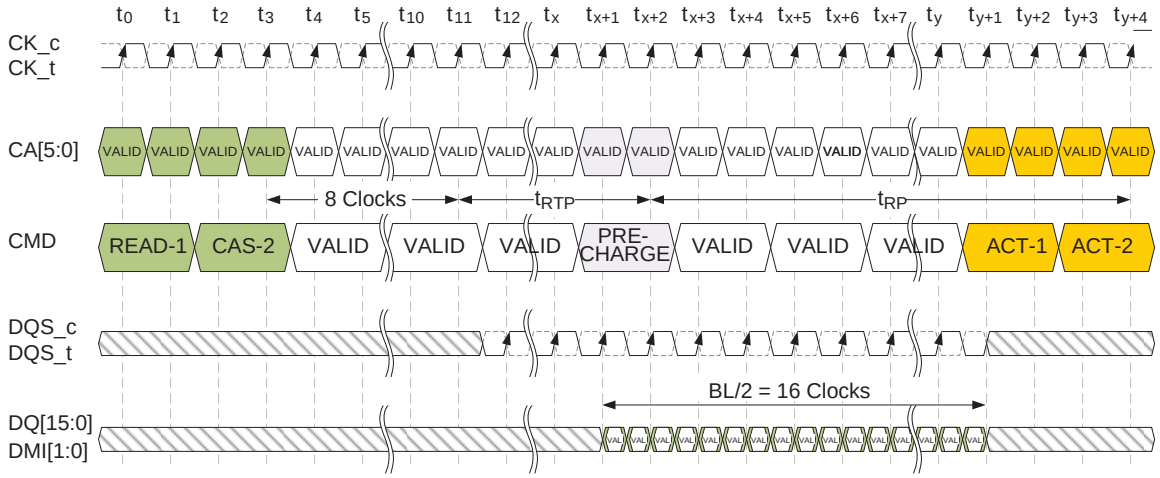

Figure 4.47 — Burst READ followed by PRECHARGE (Shown with BL32, 2tCK pre-amble)

4.16.2 Burst WRITE Followed by PRECHARGE

A Write Recovery time (tWR) must be provided before a PRECHARGE command may be issued. This delay is referenced from the next rising edge of CK_t after the last latching DQS clock of the burst.

LPDDR4-SDRAM devices write data to the memory array in prefetch multiples (prefetch=16). An internal WRITE operation can only begin after a prefetch group has been clocked, so tWR starts at the prefetch boundaries. The minimum WRITE-to-PRECHARGE time for commands to the same bank is WL + BL/2 + 1 + RU(tWR/tCK) clock cycles.

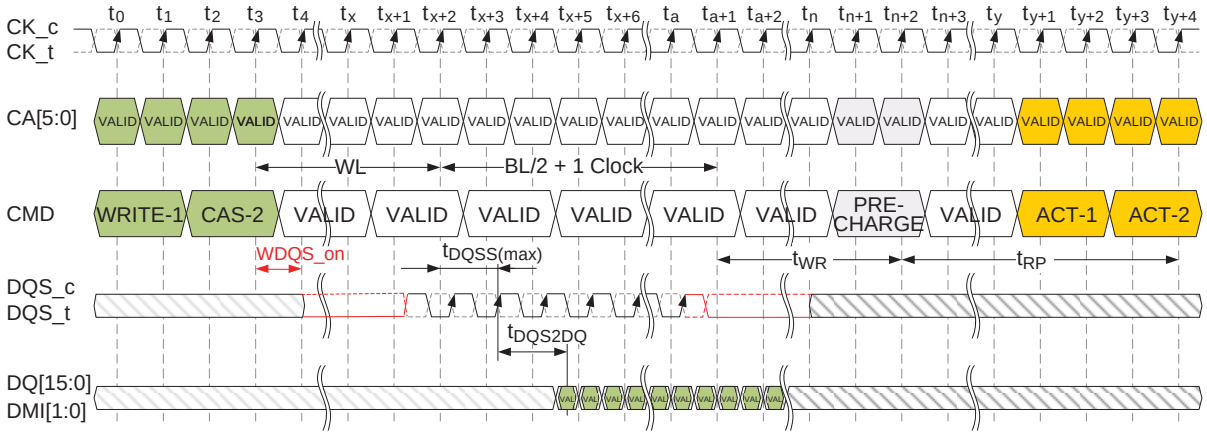

Figure 4.48— Burst WRITE Followed by PRECHARGE (Shown with BL16, 2tCK pre-amble)

4.16.3 Auto-PRECHARGE Operation

Before a new row can be opened in an active bank, the active bank must be precharged using either the PRECHARGE command or the Auto-PRECHARGE function. When a READ, a WRITE or Masked Write command is issued to the device, the AP bit (CA5) can be set to enable the active bank to automatically begin precharge at the earliest possible moment during the burst READ, WRITE or Masked Write cycle.

If AP is LOW when the READ or WRITE command is issued, then the normal READ, WRITE or Masked Write burst operation is executed and the bank remains active at the completion of the burst.

If AP is HIGH when the READ, WRITE or Masked Write command is issued, the Auto-PRECHARGE function is engaged. This feature enables the PRECHARGE operation to be partially or completely hidden during burst READ cycles (dependent upon READ or WRITE latency), thus improving system performance for random data access.

4.16.4 Burst READ with Auto-PRECHARGE

If AP is HIGH when a READ command is issued, the READ with Auto-PRECHARGE function is engaged. An internal precharge procedure starts a following delay time after the READ command. And this delay time depends on BL setting.

BL = 16: nRTP

BL = 32: 8nCK + nRTP

For LPDDR4 Auto-PRECHARGE calculations, see Table 4.15. Following an Auto-PRECHARGE operation, an ACTIVATE command can be issued to the same bank if the following two conditions are both satisfied:

a. The RAS precharge time (tRP) has been satisfied from the clock at which the Auto-PRECHARGE began, or

b. The RAS cycle time (tRC) from the previous bank activation has been satisfied.

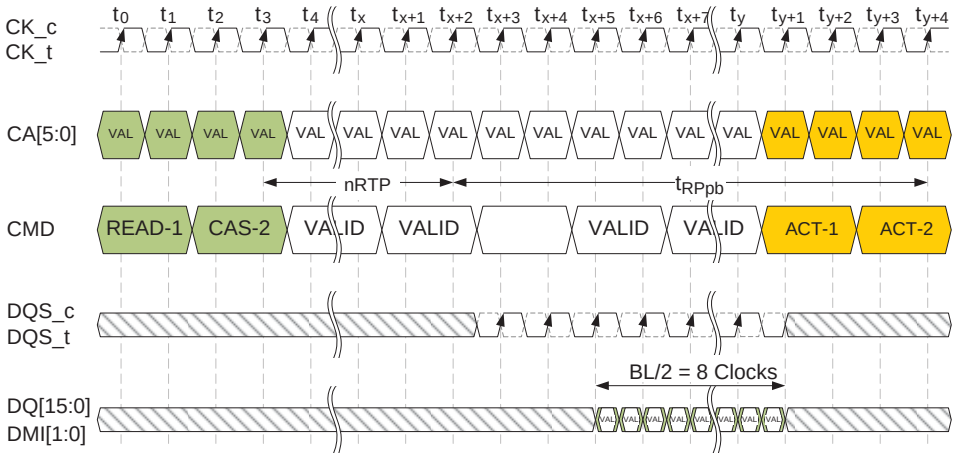

Figure 4.49 — Burst READ with Auto-PRECHARGE
(Shown with BL16, 2tCK pre-amble)

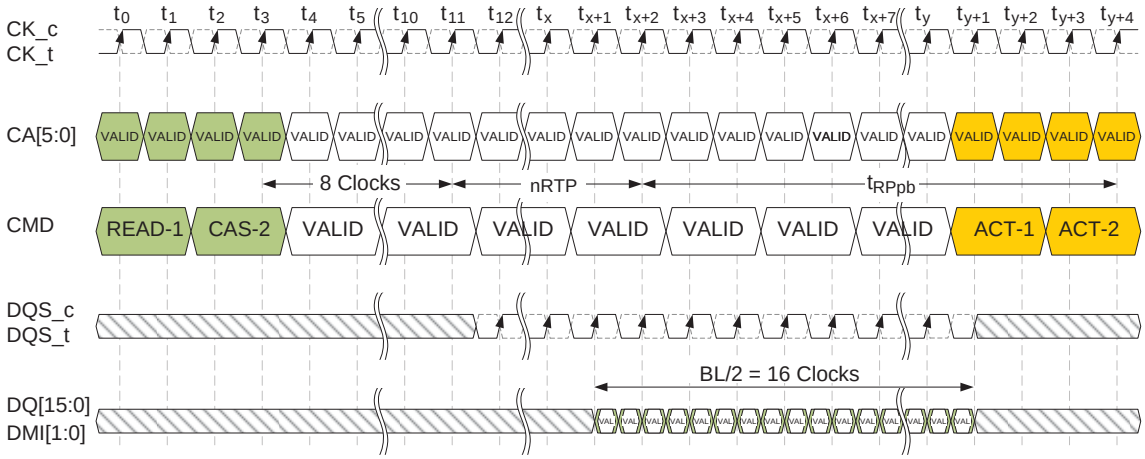

Figure 4.50 — Burst READ with Auto-PRECHARGE
(Shown with BL32, 2tCK pre-amble)

4.16.5 Burst WRITE with Auto-PRECHARGE

If AP is HIGH when a WRITE command is issued, the WRITE with Auto-PRECHARGE function is engaged. The device starts an Auto-PRECHARGE on the rising edge tWR cycles after the completion of the Burst WRITE.

Following a WRITE with Auto-PRECHARGE, an ACTIVATE command can be issued to the same bank if the following conditions are met:

a. The RAS precharge time (tRP) has been satisfied from the clock at which the Auto-PRECHARGE began, and

b. The RAS cycle time (tRC) from the previous bank activation has been satisfied.

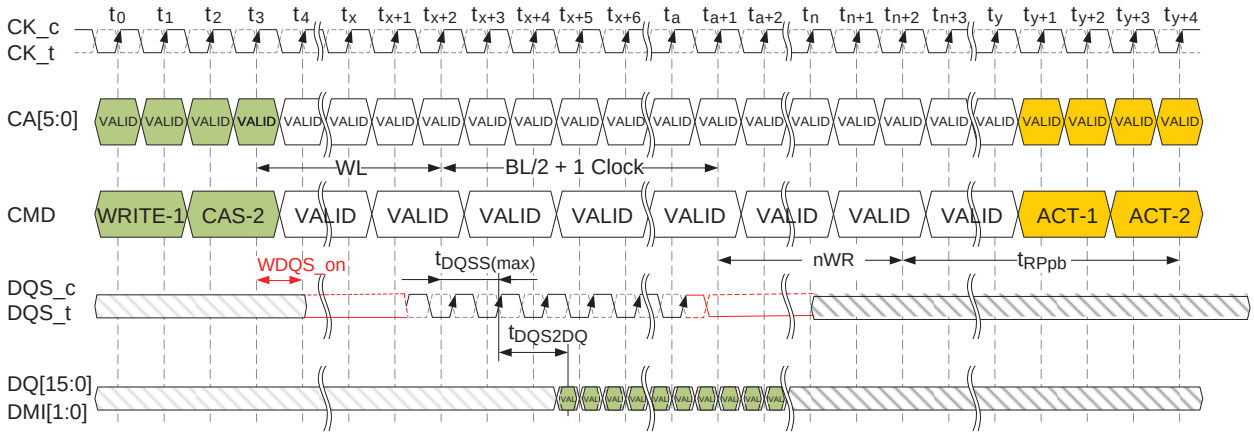

Figure 4.51 — Burst WRITE with Auto-PRECHARGE (Shown with BL16, 2tCK pre-amble)

4.16.6 Auto-Precharge Operation

Before a new row can be opened in an active bank, the active bank must be precharged using either the PRECHARGE command or the Auto-Precharge function. When a READ, a WRITE or Masked Write command is issued to the device, the AP bit (CA5) can be set to enable the active bank to automatically begin precharge at the earliest possible moment during the burst READ, WRITE or Masked Write cycle.

If AP is LOW when the READ or WRITE command is issued, then the normal READ, WRITE or Masked Write burst operation is executed and the bank remains active at the completion of the burst.

If AP is HIGH when the READ, WRITE or Masked Write command is issued, the Auto-Precharge function is engaged. This feature enables the PRECHARGE operation to be partially or completely hidden during burst READ cycles (dependent upon READ or WRITE latency), thus improving system performance for random data access.

Read with Auto-Precharge or Write/Mask Write with Auto-Precharge commands may be issued after tRCD has been satisfied. The LPDDR4 SDRAM RAS Lockout feature will schedule the internal precharge to assure that tRAS is satisfied.

tRC needs to be satisfied prior to issuing subsequent Activate commands to the same bank.

The figure below shows example of RAS lock function.

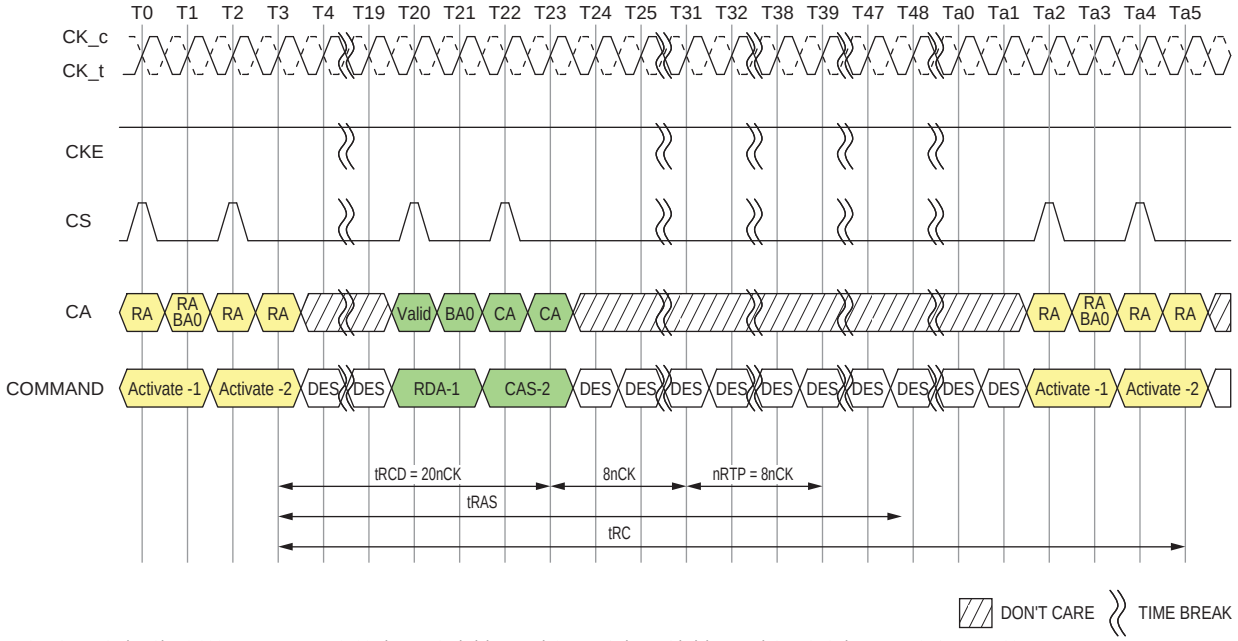

NOTES : 1. tCK(AVG) = 0.938ns, Data Rate = 2133Mbps, tRCD(Min) = Max(18ns, 4nCK), tRAS(Min) = Max(42ns, 3nCK), nRTP = 8nCK, BL = 32
2. tRCD = 20nCK comes from Roundup(18ns/0.938ns)
3. DES commands are shown for ease of illustration; other commands may be valid at these times.

Figure 4.52 — Command Input Timing with RAS lock

4.16.7 Delay time from Write to Read with Auto-Precharge

In the case of write command followed by read with Auto-Precharge, controller must satisfy tWR for the write command before initiating the DRAM internal Auto-Precharge. It means that (tWTR + nRTP) should be equal or longer than (tWR) when BL setting is 16, as well as (tWTR + nRTP +8nCK) should be equal or longer than (tWR) when BL setting is 32. Refer to the Figure 4.53 for details. Timing is shown in Tables 4.15 and 4.16.

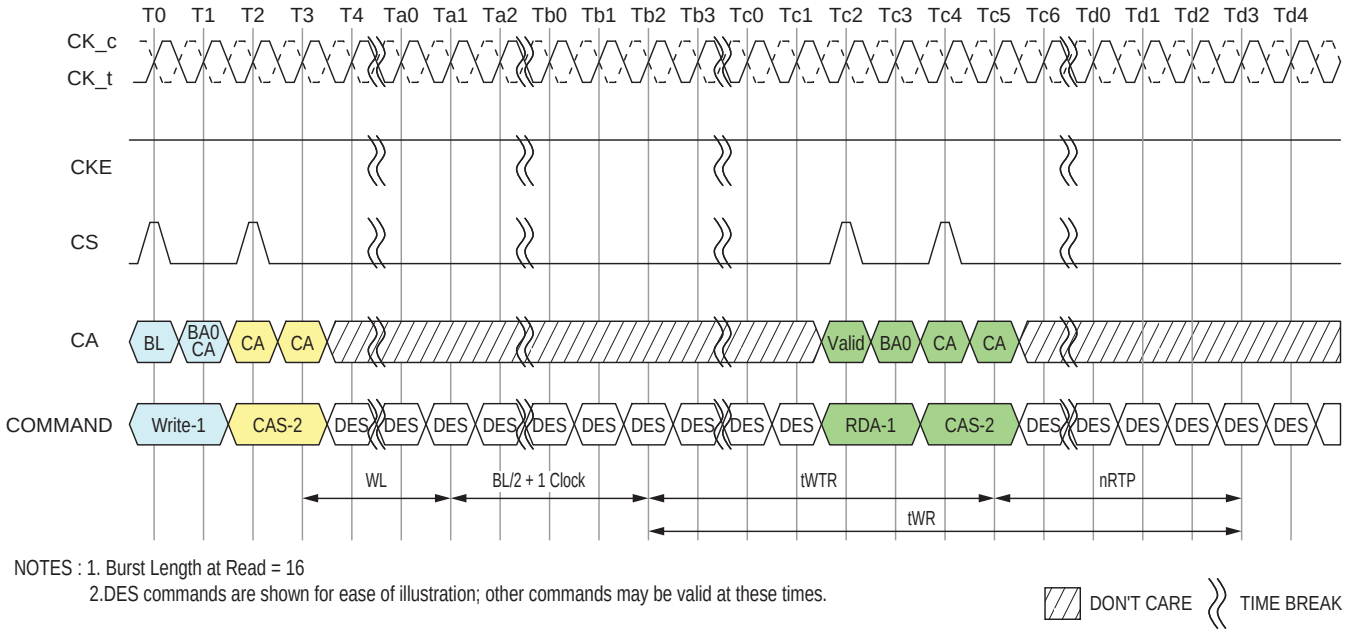

NOTES : 1. Burst Length at Read = 16
2.DES commands are shown for ease of illustration; other commands may be valid at these times.

Figure 4.53 — Delay time from Write to Read with Auto-Precharge

Table 4.15 — Timing Between Commands (PRECHARGE and Auto-PRECHARGE) : DQ ODT is Disable

From Command	To Command	Minimum Delay between "From Command" and "To Command"	Unit	Notes
READ BL=16	PRECHARGE (to same bank as Read)	tRTP	tCK	1,6
	PRECHARGE All	tRTP	tCK	1,6
READ BL=32	PRECHARGE (to same bank as Read)	8tCK + tRTP	tCK	1,6
	PRECHARGE All	8tCK + tRTP	tCK	1,6
READ w/AP BL=16	PRECHARGE (to same bank as READ w/AP)	nRTP	tCK	1,10
	PRECHARGE All	nRTP	tCK	1,10
	Activate (to same bank as READ w/AP)	nRTP + tRPpb	tCK	1,8,10
	WRITE or WRITE w/AP (same bank)	Illegal	-	
	MASK-WR or MASK-WR w/AP (same bank)	Illegal	-	
	WRITE or WRITE w/AP (different bank)	RL+RU(tDQSCK(max)/tCK)+BL/2+RD(tRPST)-WL+tWPRE	tCK	3,4,5
	MASK-WR or MASK-WR w/AP (different bank)	RL+RU(tDQSCK(max)/tCK)+BL/2+RD(tRPST)-WL+tWPRE	tCK	3,4,5
	READ or READ w/AP (same bank)	Illegal	-	
	READ or READ w/AP (different bank)	BL/2	tCK	3

Table 4.15 — Timing Between Commands (PRECHARGE and Auto-PRECHARGE) : DQ ODT is Disable

From Command	To Command	Minimum Delay between "From Command" and "To Command"	Unit	Notes
READ w/AP BL=32	PRECHARGE (to same bank as READ w/AP)	8tCK + nRTP	tCK	1,10
	PRECHARGE All	8tCK + nRTP	tCK	1,10
	Activate (to same bank as READ w/AP)	8tCK + nRTP +tRPpb	tCK	1,8,10
	WRITE or WRITE w/AP (same bank)	Illegal	-	
	MASK-WR or MASK-WR w/AP (same bank)	Illegal	-	
	WRITE or WRITE w/AP (different bank)	RL+RU(tDQSCK(max)/tCK)+BL/2+RD(tRPST)-WL+tWPRE		3,4,5
	MASK-WR or MASK-WR w/AP (different bank)	RL+RU(tDQSCK(max)/tCK)+BL/2+RD(tRPST)-WL+tWPRE		3,4,5
	READ or READ w/AP (same bank)	Illegal	-	
	READ or READ w/AP (different bank)	BL/2	tCK	3
WRITE BL=16 & 32	PRECHARGE (to same bank as WRITE)	WL + BL/2 + tWR + 1	tCK	1,7
	PRECHARGE All	WL + BL/2 + tWR + 1	tCK	1,7
MASK-WR BL=16	PRECHARGE (to same bank as MASK-WR)	WL + BL/2 + tWR + 1	tCK	1,7
	PRECHARGE All	WL + BL/2 + tWR + 1	tCK	1,7

Table 4.15 — Timing Between Commands (PRECHARGE and Auto-PRECHARGE) : DQ ODT is Disable

From Command	To Command	Minimum Delay between "From Command" and "To Command"	Unit	Notes
WRITE w/AP BL=16 & 32	PRECHARGE (to same bank as WRITE w/AP)	WL + BL/2 + nWR + 1	tCK	1,11
	PRECHARGE All	WL + BL/2 + nWR + 1	tCK	1,11
	ACTIVATE (to same bank as WRITE w/AP)	WL + BL/2 +nWR + 1 + tRPpb	tCK	1,8,11
	WRITE or WRITE w/AP (same bank)	Illegal	-	
	READ or READ w/AP (same bank)	Illegal	-	
	WRITE or WRITE w/AP (different bank)	BL/2	tCK	3
	MASK-WR or MASK-WR w/AP (different bank)	BL/2	tCK	3
	READ or READ w/AP (different bank)	WL + BL/2 + tWTR + 1	tCK	3,9

Table 4.15 — Timing Between Commands (PRECHARGE and Auto-PRECHARGE) : DQ ODT is Disable

From Command	To Command	Minimum Delay between "From Command" and "To Command"	Unit	Notes
MASK-WR w/AP BL=16	PRECHARGE (to same bank as MASK-WR w/AP)	WL + BL/2 + nWR + 1	tCK	1,11
	PRECHARGE All	WL + BL/2 +nWR + 1	tCK	1,11
	ACTIVATE (to same bank as MASK-WR w/AP)	WL + BL/2 + nWR + 1 + tRPpb	tCK	1,8,11
	WRITE or WRITE w/AP (same bank)	Illegal	-	3
	MASK-WR or MASK-WR w/AP (same bank)	Illegal	-	3
	WRITE or WRITE w/AP (different bank)	BL/2	tCK	3
	MASK-WR or MASK-WR w/AP (different bank)	BL/2	tCK	3
	READ or READ w/AP (same bank)	Illegal	-	3
	READ or READ w/AP (different bank)	WL + BL/2 + tWTR + 1	tCK	3,9

Table 4.15 — Timing Between Commands (PRECHARGE and Auto-PRECHARGE) : DQ ODT is Disable

From Command	To Command	Minimum Delay between "From Command" and "To Command"	Unit	Notes
PRECHARGE	PRECHARGE (to same bank as PRECHARGE)	4	tCK	1
	PRECHARGE All	4	tCK	1
PRECHARGE All	PRECHARGE	4	tCK	1
	PRECHARGE All	4	tCK	1

Note:

1. For a given bank, the precharge period should be counted from the latest precharge command, whether per-bank or all-bank, issued to that bank. The precharge period is satisfied tRP after that latest precharge command.
2. Any command issued during the minimum delay time as specified in Table 4.15 is illegal.
3. After READ w/AP, seamless read operations to different banks are supported. After WRITE w/AP or MASK-WR w/AP, seamless write operations to different banks are supported. READ, WRITE, and MASK-WR operations may not be truncated or interrupted.
4. tRPST values depend on MR1-OP[7] respectively.
5. tWPRE values depend on MR1-OP[2] respectively.
6. Minimum Delay between "From Command" and "To Command" in clock cycle is calculated by dividing tRTP(in ns) by tCK(in ns) and rounding up to the next integer: Minimum Delay[cycles] = Roundup(tRTP[ns] / tCK[ns])
7. Minimum Delay between "From Command" and "To Command" in clock cycle is calculated by dividing tWR(in ns) by tCK(in ns) and rounding up to the next integer: Minimum Delay[cycles] = Roundup(tWR[ns] / tCK[ns])
8. Minimum Delay between "From Command" and "To Command" in clock cycle is calculated by dividing tRPpb(in ns) by tCK(in ns) and rounding up to the next integer: Minimum Delay[cycles] = Roundup(tRPpb[ns] / tCK[ns])
9. Minimum Delay between "From Command" and "To Command" in clock cycle is calculated by dividing tWTR(in ns) by tCK(in ns) and rounding up to the next integer: Minimum Delay[cycles] = Roundup(tWTR[ns] / tCK[ns])
10. For Read w/AP the value is nRTP which is defined in Mode Register 2.

Table 4.16 — Timing Between Commands (read w/ AP and write command): DQ ODT is Enabled

From Command	To Command	Minimum Delay between "From Command" and "To Command"	Unit	Notes
READ w/AP BL=16	WRITE or WRITE w/AP (different bank)	RL+RU(tDQSCK(max)/tCK)+BL/2+RD(tRPST)-ODTLon-RD(tODTon,min/tCK)+1	tCK	2, 3
	MASK-WR or MASK-WR w/AP (different bank)	RL+RU(tDQSCK(max)/tCK)+BL/2+RD(tRPST)-ODTLon-RD(tODTon,min/tCK)+1	tCK	2, 3
READ w/AP BL=32	WRITE or WRITE w/AP (different bank)	RL+RU(tDQSCK(max)/tCK)+BL/2+RD(tRPST)-ODTLon-RD(tODTon,min/tCK)+1	tCK	2, 3
	MASK-WR or MASK-WR w/AP (different bank)	RL+RU(tDQSCK(max)/tCK)+BL/2+RD(tRPST)-ODTLon-RD(tODTon,min/tCK)+1	tCK	2, 3

Note:

1. The rest of the timing about prechage and Auto-Precharge is same as DQ ODT is Disable case.
2. After READ w/AP, seamless read operations to different banks are supported. READ, WRITE, and MASK-WR operations may not be truncated or interrupted.
3. tRPST values depend on MR1-OP[7] respectively.

4.17 Refresh command

The REFRESH command is initiated with CS HIGH, CA0 LOW, CA1 LOW, CA2 LOW, CA3 HIGH and CA4 LOW at the first rising edge of the clock. Per-bank REFRESH is initiated with CA5 LOW at the first rising edge of the clock. All-bank REFRESH is initiated with CA5 HIGH at the first rising edge of the clock.

A per-bank REFRESH command (REFpb) is performed to the bank address as transferred on CA0, CA1 and CA2 at the second rising edge of the clock. Bank address BA0 is transferred on CA0, bank address BA1 is transferred on CA1 and bank address BA2 is transferred on CA2. A per-bank REFRESH command (REFpb) to the eight banks can be issued in any order. e.g., REFpb commands are issued in the following order: 1-3-0-2-4-7-5-6. After the eight banks have been refreshed using the per-bank REFRESH command the controller can send another set of per-bank REFRESH commands in the same order or a different order. e.g., REFpb commands are issued in the following order that is different from the previous order: 7-1-3-5-0-4-2-6. One of the possible order can also be a sequential round robin: 0-1-2-3-4-5-6-7. It is illegal to send a per-bank REFRESH command to the same bank unless all eight banks have been refreshed using the per-bank REFRESH command. The count of eight REFpb commands starts with the first REFpb command after a synchronization event.

The bank count is synchronized between the controller and the SDRAM by resetting the bank count to zero. Synchronization can occur upon issuing a RESET command or at every exit from self refresh. REFab command also synchronizes the counter between the controller and SDRAM to zero. The SDRAM device can be placed in self-refresh or a REFab command can be issued at any time without cycling through all eight banks using per-bank REFRESH command. After the bank count is synchronized to zero the controller can issue per-bank REFRESH commands in any order as described in the previous paragraph.

A REFab command issued when the bank counter is not zero will reset the bank counter to zero and the DRAM will perform refreshes to all banks as indicated by the row counter. If another refresh command (REFab or REFpb) is issued after the REFab command then it uses an incremented value of the row counter. Table 4.17 shows examples of both bank and refresh counter increment behavior.

Table 4.17 — Bank and Refresh counter increment behavior

#	Command	BA2	BA1	BA0	Refresh Bank#	Bank Counter #	Ref Counter # (Row Address #)
0	Reset, SRX or REFab					To 0	-
1	REFpb	0	0	0	0	0 to 1	n
2	REFpb	0	0	1	1	1 to 2	
3	REFpb	0	1	0	2	2 to 3	
4	REFpb	0	1	1	3	3 to 4	
5	REFpb	1	0	0	4	4 to 5	
6	REFpb	1	0	1	5	5 to 6	
7	REFpb	1	1	0	6	6 to 7	
8	REFpb	1	1	1	7	7 to 0	
9	REFpb	1	1	0	6	0 to 1	n + 1
10	REFpb	1	1	1	7	1 to 2	
11	REFpb	0	0	1	1	2 to 3	
12	REFpb	0	1	1	3	3 to 4	
13	REFpb	1	0	1	5	4 to 5	
14	REFpb	0	1	0	2	5 to 6	
15	REFpb	0	0	0	0	6 to 7	
16	REFpb	1	0	0	4	7 to 0	
17	REFpb	0	0	0	0	0 to 1	n + 2
18	REFpb	0	0	1	1	1 to 2	
19	REFpb	0	1	0	2	2 to 3	
20	***REFab***	***V***	***V***	***V***	***0~7***	***To 0***	***n + 2***
21	REFpb	1	1	0	6	0 to 1	n + 3
22	REFpb	1	1	1	7	1 to 2	

A bank must be idle before it can be refreshed. The controller must track the bank being refreshed by the per-bank REFRESH command.

The REFpb command must not be issued to the device until the following conditions are met:

- tRFCab has been satisfied after the prior REFab command.
- tRFCpb has been satisfied after the prior REFpb command.
- tRP has been satisfied after the prior PRECHARGE command to that bank.
- tRRD has been satisfied after the prior ACTIVATE command (if applicable, for example after activating a row in a different bank than the one affected by the REFpb command).

The target bank is inaccessible during per-bank REFRESH cycle time (tRFCpb), however, other banks within the device are accessible and can be addressed during the cycle. During the REFpb operation, any of the banks other than the one being refreshed can be maintained in an active state or accessed by a READ or a WRITE command. When the per-bank REFRESH cycle has completed, the affected bank will be in the idle state.

After issuing REFpb, these conditions must be met:
- tRFCpb must be satisfied before issuing a REFab command.
- tRFCpb must be satisfied before issuing an ACTIVATE command to the same bank.
- tRRD must be satisfied before issuing an ACTIVATE command to a different bank.
- tRFCpb must be satisfied before issuing another REFpb command.

An all-bank REFRESH command (REFab) issues a REFRESH command to all banks. All banks must be idle when REFab is issued (for instance, by issuing a PRECHARGE-all command prior to issuing an all-bank REFRESH command). REFab also synchronizes the bank count between the controller and the SDRAM to zero. The REFab command must not be issued to the device until the following conditions have been met:
- tRFCab has been satisfied following the prior REFab command.
- tRFCpb has been satisfied following the prior REFpb command.
- tRP has been satisfied following the prior PRECHARGE commands.

When an all-bank refresh cycle has completed, all banks will be idle. After issuing REFab:
- tRFCab latency must be satisfied before issuing an ACTIVATE command.
- tRFCab latency must be satisfied before issuing a REFab or REFpb command.

Table 4.18 — REFRESH Command Scheduling Separation requirements

Symbol	Minimum Delay From	To	Notes
tRFCab	REFab	REFab	
		Activate command to any bank	
		REFpb	
tRFCpb	REFpb	REFab	
		Activate command to same bank as REFpb	
		REFpb	
tRRD	REFpb	Activate command to different bank than REFpb	
	Activate	REFpb	1
		Activate command to different bank than prior Activate command	

Notes:
1. A bank must be in the idle state before it is refreshed, so following an ACTIVATE command REFab is prohibited; REFpb is supported only if it affects a bank that is in the idle state.

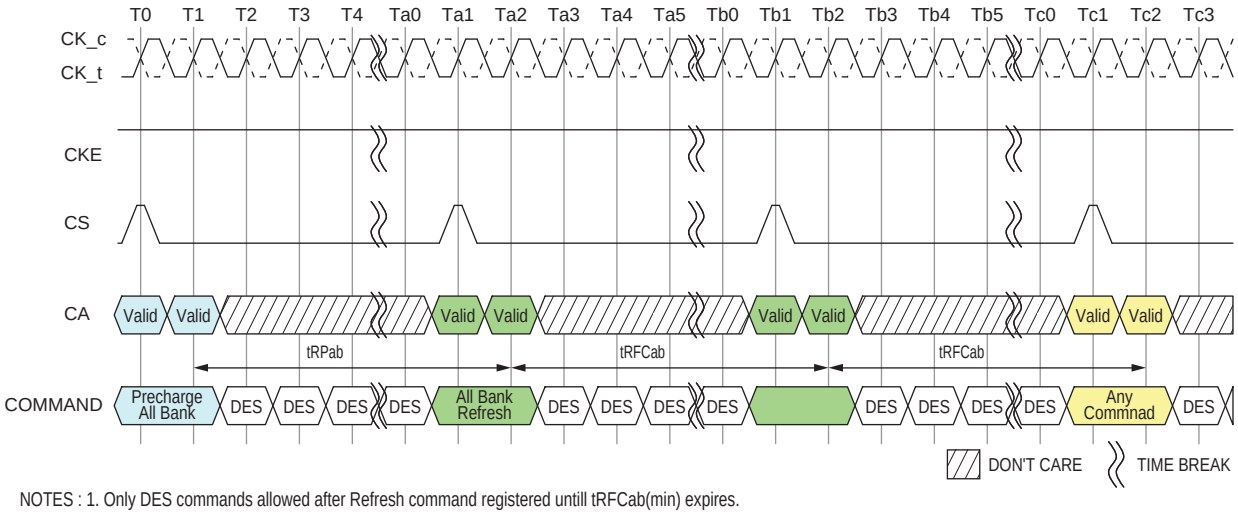

NOTES : 1. Only DES commands allowed after Refresh command registered untill tRFCab(min) expires.

Figure 4.54 — All-Bank Refresh Operation

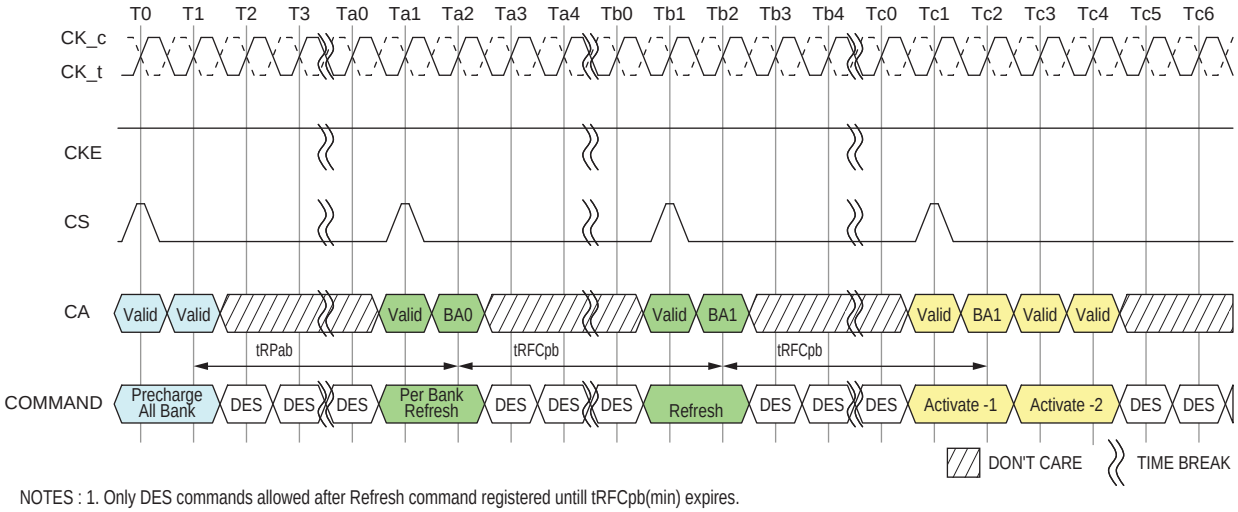

NOTES : 1. Only DES commands allowed after Refresh command registered untill tRFCpb(min) expires.
2. In the beginning of this example, the REFpb bank is pointing to bank 0.
3. Operations to banks other than the bank being refreshed are supported during the tRFCpb period.

Figure 4.55 — Per-Bank Refresh Operation

In general, a Refresh command needs to be issued to the LPDDR4 SDRAM regularly every tREFI interval. To allow for improved efficiency in scheduling and switching between tasks, some flexibility in the absolute refresh interval is provided. A maximum of 8 Refresh commands can be postponed during operation of the LPDDR4 SDRAM, meaning that at no point in time more than a total of 8 Refresh commands are allowed to be postponed and maximum number of pulled-in or postponed REF command is dependent on refresh rate. It is described in Table 4.19 and Table 4.20.

In case that 8 Refresh commands are postponed in a row, the resulting maximum interval between the surrounding Refresh commands is limited to 9 × tREFI. A maximum of 8 additional Refresh commands can be issued in advance ("pulled in"), with each one reducing the number of regular Refresh commands required later by one. Note that pulling in more than 8 Refresh commands in advance does not further reduce the number of regular Refresh commands required later, so that the resulting maximum interval between two surrounding Refresh commands is limited to 9 × tREFI. At any given time, a maximum of 16 REF commands can be issued within 2 x tREFI. Self-Refresh Mode may be entered with a maximum of eight Refresh commands being postponed. After exiting Self-Refresh Mode with one or more Refresh commands postponed, additional Refresh commands may be postponed to the extent that the total number of postponed Refresh commands (before and after the Self-Refresh) will never exceed eight. During Self-Refresh Mode, the number of postponed or pulled-in REFcommands does not change.

Table 4.19 — Legacy Refresh Command Timing Constraints

MR4 OP[2:0]	Refresh rate	Max. No. of pulled-in or postponed REFab	Max. Interval between two REFab	Max. No. of REFab within max(2xtREFI x refresh rate multiplier, 16xtRFC)	Per-bank Refresh
000B	Low Temp. Limit	N/A	N/A	N/A	N/A
001B	4x tREFI	8	9 x 4 x tREFI	16	1/8 of REFab
010B	2x tREFI	8	9 x 2 x tREFI	16	1/8 of REFab
011B	1x tREFI	8	9 x tREFI	16	1/8 of REFab
100B	0.5x tREFI	8	9 x 0.5 x tREFI	16	1/8 of REFab
101B	0.25x tREFI	8	9 x 0.25 x tREFI	16	1/8 of REFab
110B	0.25x tREFI	8	9 x 0.25 x tREFI	16	1/8 of REFab
111B	High Temp. Limit	N/A	N/A	N/A	N/A

Table 4.20 — Modified REFRESH Command Timing Constraints

MR4 OP[2:0]	Refresh rate	Max. No. of pulled-in or postponed REFab	Max. Interval between two REFab	Max. No. of REFab within max(2xtREFI x refresh rate multiplier, 16xtRFC)	Per-bank Refresh
000B	Low Temp. Limit	N/A	N/A	N/A	N/A
001B	4x tREFI	2	3 x 4 x tREFI	4	1/8 of REFab
010B	2x tREFI	4	5 x 2 x tREFI	8	1/8 of REFab
011B	1x tREFI	8	9 x tREFI	16	1/8 of REFab
100B	0.5x tREFI	8	9 x 0.5 x tREFI	16	1/8 of REFab
101B	0.25x tREFI	8	9 x 0.25 x tREFI	16	1/8 of REFab
110B	0.25x tREFI	8	9 x 0.25 x tREFI	16	1/8 of REFab
111B	High Temp. Limit	N/A	N/A	N/A	N/A

Notes:

1. For any thermal transition phase where Refresh mode is transitioned to either 2x tREFIor 4x tREFI, DRAM will support the previous postponed refresh requirement provided the number of postponed refreshes is monotonically reduced to meet the new requirement. However, the pulled-in refresh commands in previous thermal phase are not applied in new thermal phase. Entering new thermal phase the controller must count the number of pulled-in refresh commands as zero, regardless of remaining pulled-in refresh commands in previous thermal phase.
2. LPDDR4 devices are refreshed properly if memory controller issues refresh commands with same or shorter refresh period than reported by MR4 OP[2:0]. If shorter refresh period is applied, the corresponding requirements from Table apply. For example, when MR4 OP[2:0]=001B, controller can be in any refresh rate from 4xtREFI to 0.25x tREFI. When MR4 OP[2:0]=010B, the only prohibited refresh rate is 4x tREFI.

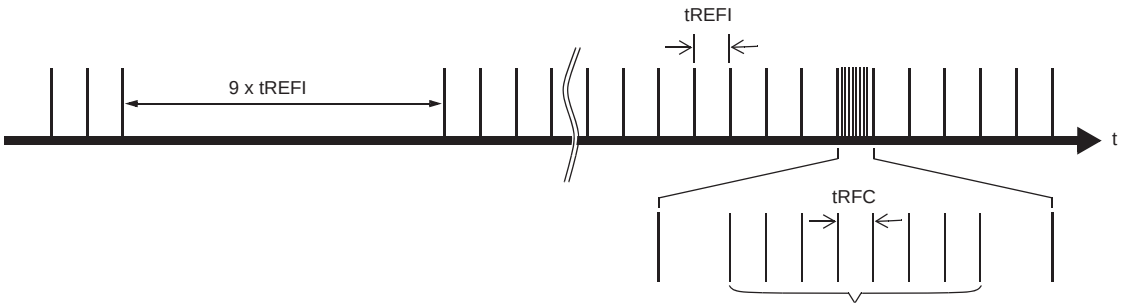

Figure 4.54 — Postponing Refresh Commands (Example)

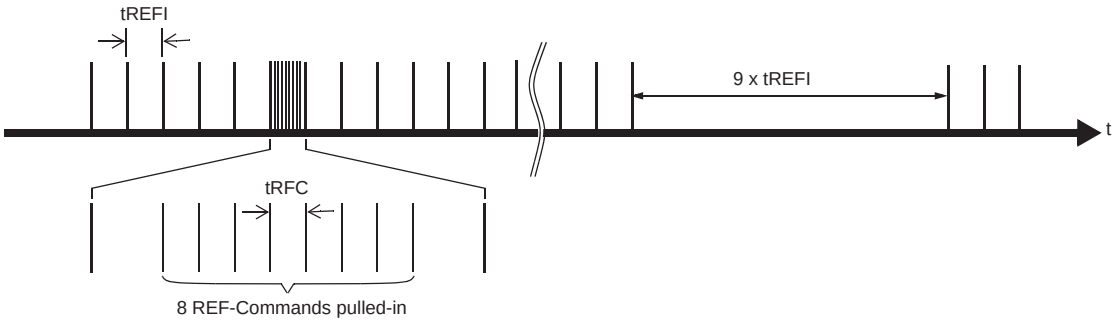

Figure 4.55 — Pulling-in Refresh Commands (Example)

4.17.1 Refresh Requirement

Between SRX command and SRE command, at least one extra refresh command is required. After the DRAM Self Refresh Exit command, in addition to the normal Refresh command at tREFI interval, the LPDDR4 DRAM requires minimum of one extra Refresh command prior to Self Refresh Entry command.

Table 4.21 — Refresh Requirement Parameters

Refresh Requirements		Symbol	1Gb	2Gb	2Gb	4Gb	4Gb	8Gb	8Gb	16Gb	16Gb	32Gb	Units
Density per Channel			1Gb	1Gb	2Gb	2Gb	4Gb	4Gb	8Gb	8Gb	16Gb	16Gb	-
Number of banks per channel			8										-
Refresh Window (tREFW) (TCASE ≤ 85°C)		tREFW	32										ms
Refresh Window (tREFW) (85ºC < TCASE ≤ 105ºC)		tREFW	16										ms
Refresh Window (tREFW) (105ºC < TCASE ≤ 125ºC)		tREFW	8										ms
Required Number of REFRESH Commands in a tREFW window		R	8192										-
Average Refresh Interval (TCASE ≤ 85ºC)	REFAB	tREFI	3.904										µs
	REFPB	tREFIpb	488										ns
Average Refresh Interval (85ºC < TCASE ≤ 105ºC)	REFAB	tREFI	1.952										µs
	REFPB	tREFIpb	244										ns
Average Refresh Interval (105ºC < TCASE ≤ 125ºC)	REFAB	tREFI	0.976										µs
	REFPB	tREFIpb	122										ns
Refresh Cycle Time (All Banks)		tRFCab	130	130	130	130	180	180	280	280	380	380	ns
Refresh Cycle Time (Per Bank)		tRFCpb	60	60	60	60	90	90	140	140	190	190	ns
Per-bank Refresh to Per-bank Refresh different bank Time		tpbR2pbR	60	60	60	60	90	90	90	90	90	90	ns

Notes:

1. Refresh for each channel is independent of the other channel on the die, or other channels in a package. Power delivery in the user's system should be verified to make sure the DC operating conditions are maintained when multiple channels are refreshed simultaneously.
2. Self refresh abort feature is available for higher density devices starting with 12 Gb device and tXSR_abort(min) is defined as tRFCpb + 17.5ns.
3. 1x refresh rate (tREFW=32ms) is supported for Tcase ≤ 85°C. Other refresh rates are indicated in this table, dependent on Tcase. The MR4 OP[2:0] value also provides guidance on the refresh rate, and if read by DRAM controller, should take precedence.

4.18 Self Refresh Operation

4.18.1 Self Refresh Entry and Exit

The Self Refresh command can be used to retain data in the LPDDR4 SDRAM, the SDRAM retains data without external Refresh command. The device has a built-in timer to accommodate Self Refresh operation. The Self Refresh is entered by Self Refresh Entry Command defined by having CS High, CA0 Low, CA1 Low, CA2 Low; CA3 High; CA4 High, CA5 Valid (Valid that means it is Logic Level, High or Low) for the first rising edge and CS Low, CA0 Valid, CA1 Valid, CA2 Valid, CA3 Valid, CA4 Valid, CA5 Valid at the second rising edge of the clock. Self Refresh command is only allowed when read data burst is completed and SDRAM is idle state.

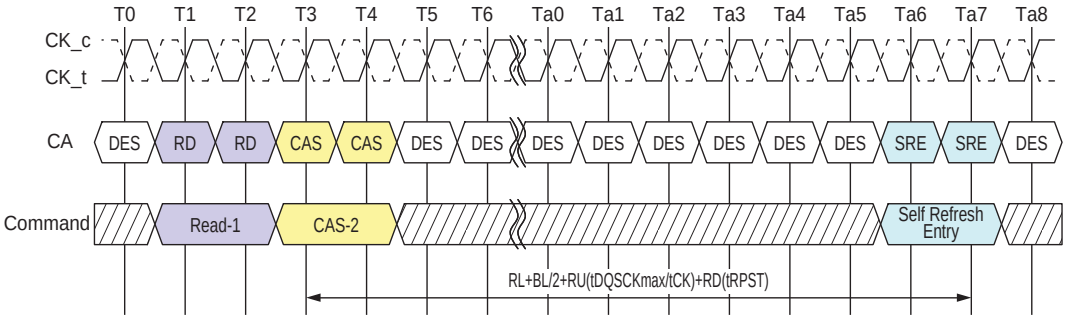

During Self Refresh mode, external clock input is needed and all input pin of SDRAM are activated. SDRAM can accept the following commands, MRR-1, CAS-2, DES, SRX, MPC, MRW-1, and MRW-2 except PASR Bank/Segment setting.

LPDDR4 SDRAM can operate in Self Refresh in both the standard or elevated temperature ranges. SDRAM will also manage Self Refresh power consumption when the operating temperature changes, lower at low temperature and higher at high temperatures.

For proper Self Refresh operation, power supply pins (V_{DD1}, V_{DD2} and V_{DDQ}) must be at valid levels. However V_{DDQ} may be turned off during Self-Refresh with Power Down after parameters are satisfied. (Refer Figure 4.57).

Prior to exiting Self-Refresh with Power Down, V_{DDQ} must be within specified limits. The minimum time that the SDRAM must remain in Self Refresh mode is tSR,min. Once Self Refresh Exit is registered, only MRR-1, CAS-2, DES, MPC, MRW-1 and MRW-2 except PASR Bank/Segment setting are allowed until tXSR is satisfied.

The use of Self Refresh mode introduces the possibility that an internally timed refresh event can be missed when Self Refresh Exit is registered. Upon exit from Self Refresh, it is required that at least one REFRESH command (8 per-bank or 1 all-bank) is issued before entry into a subsequent Self Refresh.

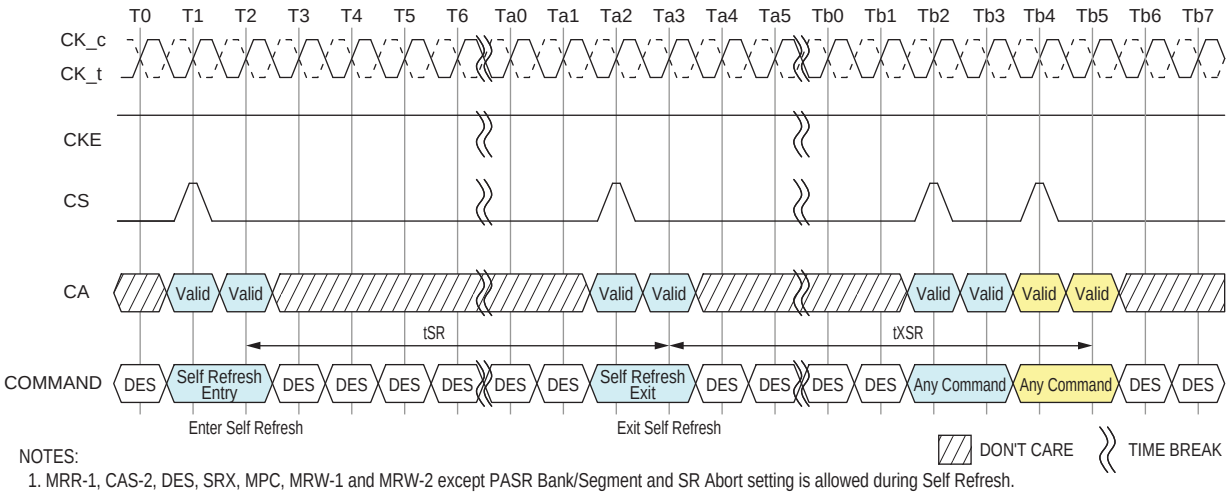

NOTES:
1. MRR-1, CAS-2, DES, SRX, MPC, MRW-1 and MRW-2 except PASR Bank/Segment and SR Abort setting is allowed during Self Refresh.
2. DES commands are shown for ease of illustration; other commands may be valid at these times.

Figure 4.56 — Self Refresh Entry/Exit Timing

4.18.2 Power Down Entry and Exit during Self Refresh

Entering/Exiting Power Down Mode is allowed during Self Refresh mode in SDRAM. The related timing parameters between Self Refresh Entry/Exit and Power Down Entry/Exit are shown in Figure 4.57.

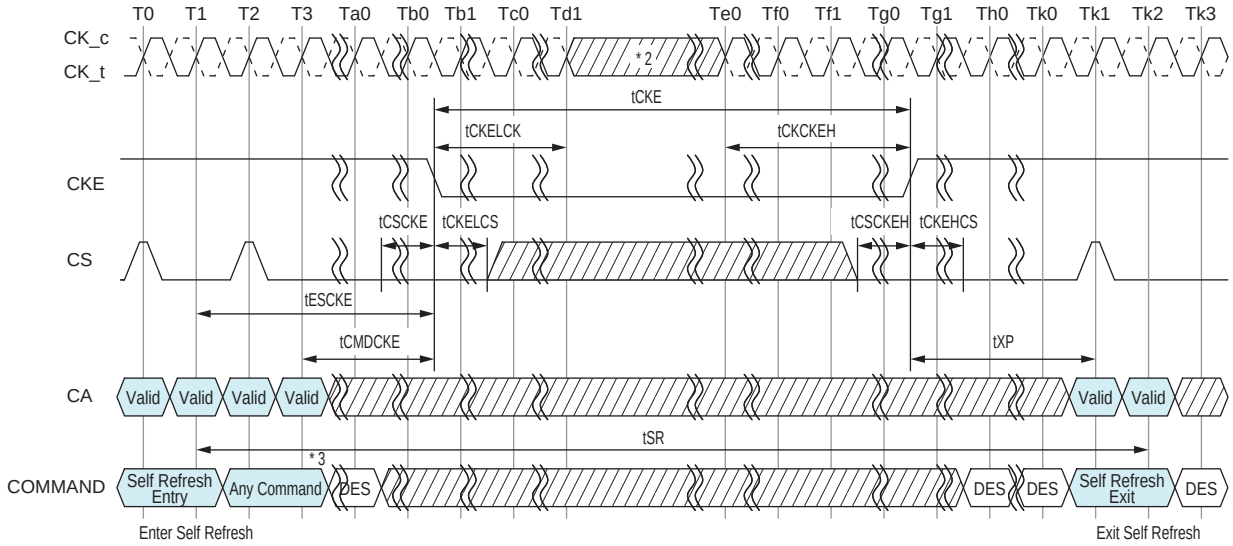

NOTES:
1. MRR-1, CAS-2, DES, SRX, MPC, MRW-1 and MRW-2 except PASR Bank/Segment setting is allowed during Self Refresh.
2. Input clock frequency can be changed or the input clock can be stopped or floated after tCKELCK saticefied and during power-down, provided that upon exiting power-down, the clock is stable and within specified limits for a minimum of tCKCKEH of stable clock prior to power-down exit and the clock frequency is between the minimum and maximum specified frequency for the speed grade in use.
3. 2 Clock command for example.

Figure 4.57 — Self Refresh Entry/Exit Timing with Power Down Entry/Exit

4.18.2.1 Partial Array Self-Refresh (PASR)

4.18.2.1.1 PASR Bank Masking

The LPDDR4 SDRAM has eight banks. Each bank of an LPDDR4 SDRAM can be independently configured whether a self refresh operation is taking place. One mode register unit of 8 bits, accessible via MRW command, is assigned to program the bank masking status of each bank up to 8 banks. For bank masking bit assignments, see Mode Register 16.

The mask bit to the bank controls a refresh operation of entire memory within the bank. If a bank is masked via MRW, a refresh operation to the entire bank is blocked and data retention by a bank is not guaranteed in self-refresh mode. To enable a refresh operation to a bank, a coupled mask bit has to be programmed, “unmasked”. When a bank mask bit is unmasked, a refresh to a bank is determined by the programmed status of segment mask bits, which is described in the following chapter.

4.18.2.1.2 PASR Segment Masking

A segment masking scheme may be used in lieu of or in combination with the bank masking scheme in LPDDR4 SDRAM which utilize eight segments per bank. For segment masking bit assignments, see Mode Register 17. For those refresh-enabled banks, a refresh operation to the address range which is represented by a segment is blocked when the mask bit to this segment is programmed, “masked”. Programming of segment mask bits is similar to the one of bank mask bits. Eight segments are used as listed in Mode Register 17. One mode register unit is used for the programming of segment mask bits up to 8 bits. One more mode register unit may be reserved for future use. Programming of bits in the reserved registers has no effect on the device operation.

4.18.3 Command input Timing after Power Down Exit

Command input timings after Power Down Exit during Self Refresh mode are shown in Figure 4.58.

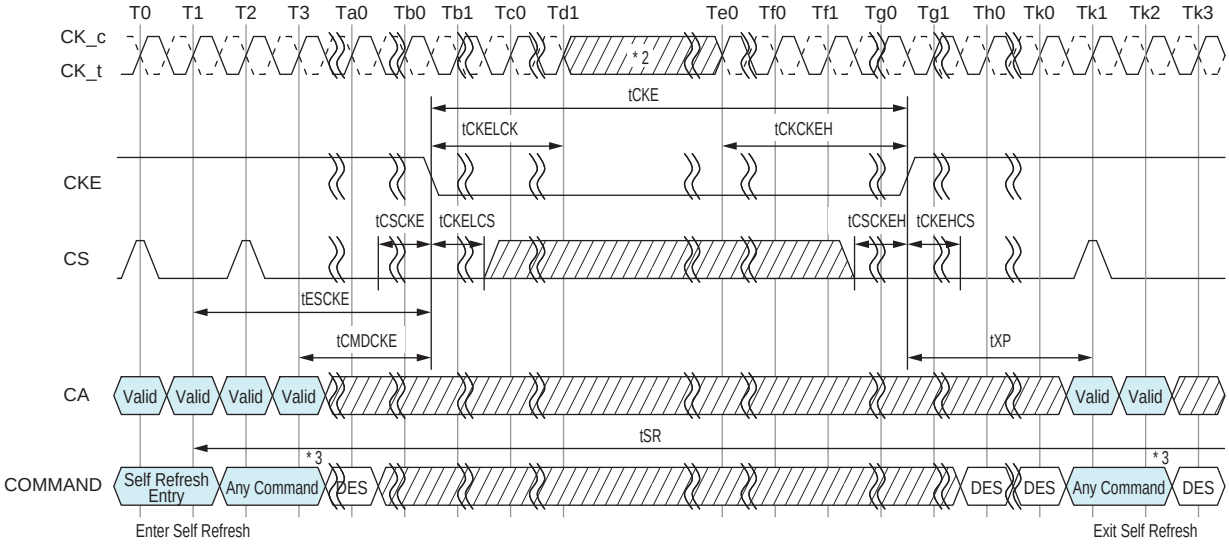

NOTES:

1. MRR-1, CAS-2, DES, SRX, MPC, MRW-1 and MRW-2 except PASR Bank/Segment setting is allowed during Self Refresh.
2. Input clock frequency can be changed or the input clock can be stopped or floated after tCKELCK saticefied and during power-down, provided that upon exiting power-down, the clock is stable and within specified limits for a minimum of tCKCKEH of stable clock prior to power-down exit and the clock frequency is between the minimum and maximum specified frequency for the speed grade in use.
3. 2 Clock command for example.

Figure 4.58 — Command input timings after Power Down Exit during Self Refresh

4.18.4 AC Timing Table

Table 4.22 — AC Timing Table

Parameter	Symbol	Min/ Max	Data Rate	Unit	Note
Self Refresh Timing					
Delay from SRE command to CKE Input low	tESCKE	Min	Max(1.75ns, 3tCK)	ns	1
Minimum Self Refresh Time	tSR	Min	Max(15ns, 3tCK)	ns	1
Exit Self Refresh to Valid commands	tXSR	Min	Max(tRFCab + 7.5ns, 2tCK)	ns	1,2

Notes:

1. Delay time has to satisfy both analog time(ns) and clock count(tCK).
   It means that tESCKE will not expire until CK has toggled through at least 3 full cycles (3 *tCK) and 1.75ns has transpired. The case which 3tCK is applied to is shown in Figure 4.59.

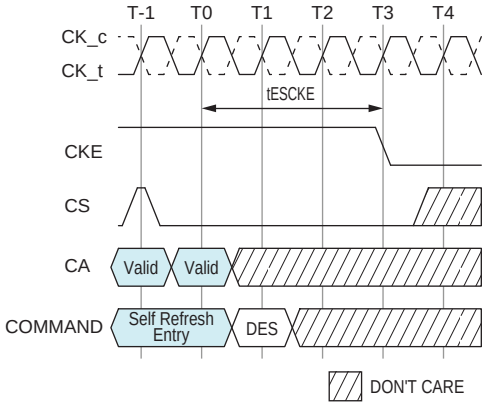

Figure 4.59 — tESCKE Timing

2. MRR-1, CAS-2, DES, MPC, MRW-1 and MRW-2 except PASR Bank/Segment setting are only allowed during this period.

4.18.5 Self Refresh Abort

If MR4 OP[3] is enabled then DRAM aborts any ongoing refresh during Self Refresh exit and does not increment the internal refresh counter. Controller can issue a valid command after a delay of tXSR_abort instead of tXSR.

The value of tXSR_abort(min) is defined as tRFCpb + 17.5ns.

Upon exit from Self Refresh mode, the LPDDR4 SDRAM requires a minimum of one extra refresh (8 per bank or 1 all bank) before entry into a subsequent Self Refresh mode. This requirement remains the same irrespective of the setting of the MR bit for self refresh abort.

The Self refresh abort feature is not supported for this device, but it is available for higher density devices starting with 12Gb device.

4.19 MRR, MRW, MPC Command during tXSR, tRFC

Mode Register Read (MRR), Mode Register Write (MRW) and Multi Purpose Command (MPC) can be issued during tXSR period.

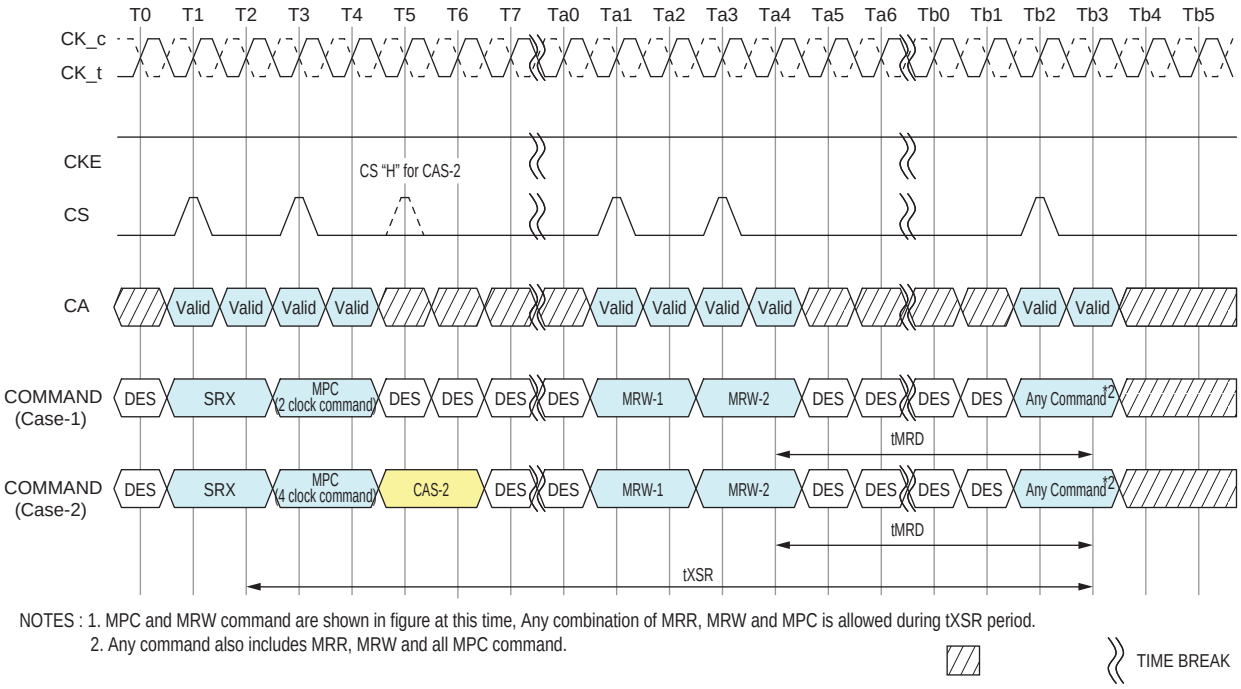

NOTES : 1. MPC and MRW command are shown in figure at this time, Any combination of MRR, MRW and MPC is allowed during tXSR period.
2. Any command also includes MRR, MRW and all MPC command.

Figure 4.60 — MRR, MRW and MPC Commands Issuing Timing during tXSR

Mode Register Read (MRR), Mode Register Write (MRW) and Multi Purpose Command (MPC) can be issued during tRFC period.

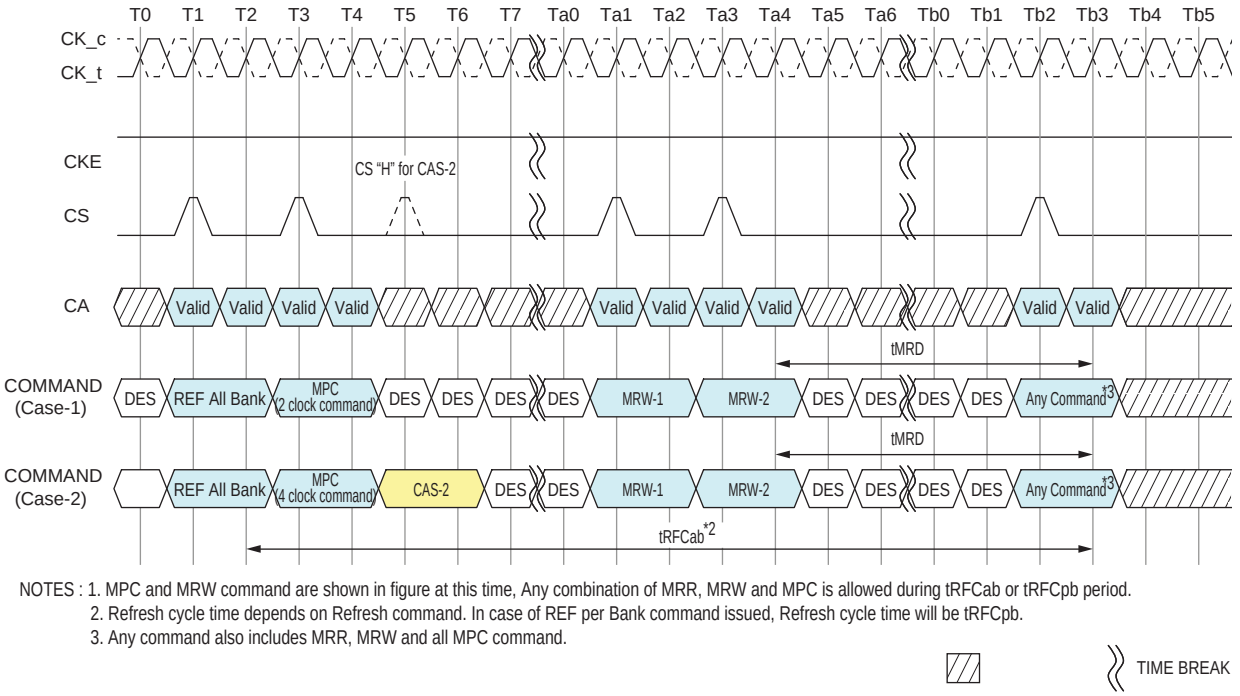

NOTES : 1. MPC and MRW command are shown in figure at this time, Any combination of MRR, MRW and MPC is allowed during tRFCab or tRFCpb period.
2. Refresh cycle time depends on Refresh command. In case of REF per Bank command issued, Refresh cycle time will be tRFCpb.
3. Any command also includes MRR, MRW and all MPC command.

4.61 — MRR, MRW and MPC Commands Issuing Timing during tRFC

4.20 Mode Register Read (MRR)

The Mode Register Read (MRR) command is used to read configuration and status data from the LPDDR4-SDRAM registers.The MRR command is initiated with CS and CA[5:0] in the proper state as defined by Table 4.68. The mode register address operands (MA[5:0]) allow the user to select one of 64 registers. The mode register contents are available on the first 4UI's data bits of DQ[7:0] after RL x tCK + tDQSCK + tDQSQ following the MRR command. Subsequent data bits contain valid but undefined content. DQS is toggled for the duration of the Mode Register READ burst. The MRR has a command burst length 16.

MRR operation must not be interrupted.

Table 4.23 — DQ output mapping

BL	0	1	2	3	4	5	6	7	8	9	10	11	12	13	14	15
DQ0	OP0				V											
DQ1	OP1				V											
DQ2	OP2				V											
DQ3	OP3				V											
DQ4	OP4				V											
DQ5	OP5				V											
DQ6	OP6				V											
DQ7	OP7				V											
DQ8-15	V															
DMI0-1	V															

Notes:
1. MRR data are extended to first 4 UI's for DRAM controller to sample data easily.
2. DBI may apply or may not apply during normal MRR. It's vendor specific. If read DBI is enable with MRS and vendor cannot support the DBI during MRR, DMI pin status should be low.
3. The read pre-amble and post-amble of MRR are same as normal read.

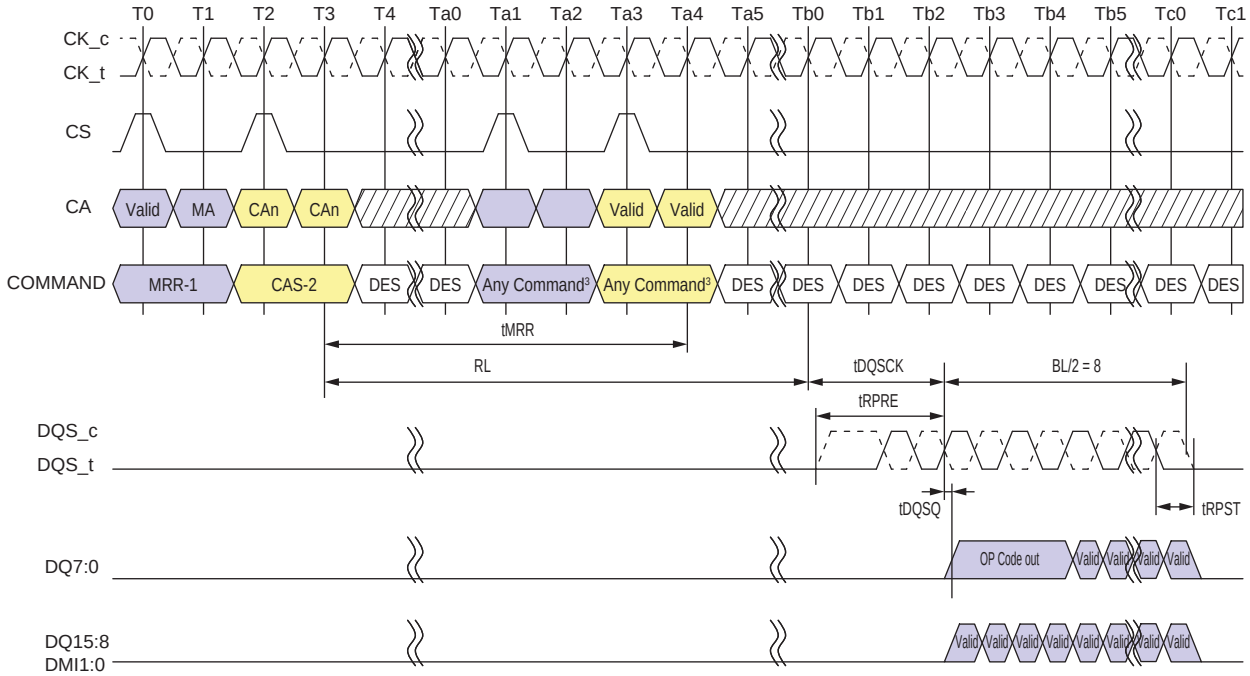

Note
1. Only BL=16 is supported
2. Only DES is allowed during tMRR period
3. There are some exceptions about issuing commnads after tMRR. Refer to MRR/MRW Timing Constraints Table for detail.
4. DBI is Disable mode.
5. DES commands except tMRR period are shown for ease of illustration; other commands may be valid at these times.
6 . DQ/DQS: VSSQ termination

DON'T CARE TIME BREAK

Figure 4.62 — Mode Register Read Operation

4.20.1 MRR after Read and Write command

After a prior READ command, the MRR command must not be issued earlier than BL/2 clock cycles, in a similar way WL + BL/2 + 1 + RU(tWTR/tCK) clock cycles after a prior Write, Write with AP, Mask Write, Mask Write with AP and MPC Write FIFO command in order to avoid the collision of Read and Write burst data on SDRAM's internal Data bus.

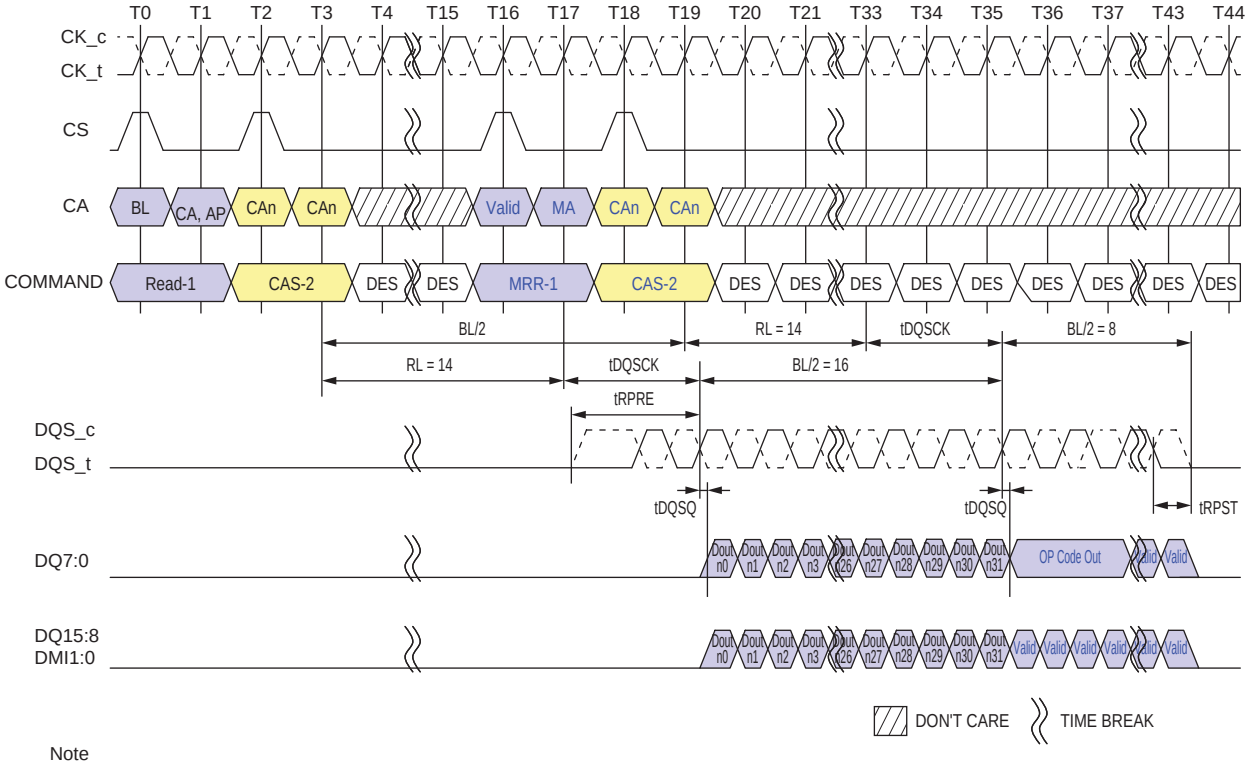

Note
1. The minimum number of clock cycles from the burst READ command to the MRR command is BL/2.
2. Read BL = 32, MRR BL = 16, RL = 14, Preamble = Toggle, Postamble = 0.5nCK, DBI = Disable, DQ/DQS: VSSQ termination
3. DES commands except tMRR period are shown for ease of illustration; other commands may be valid at these times.

Figure 4.63 — READ to MRR Timing

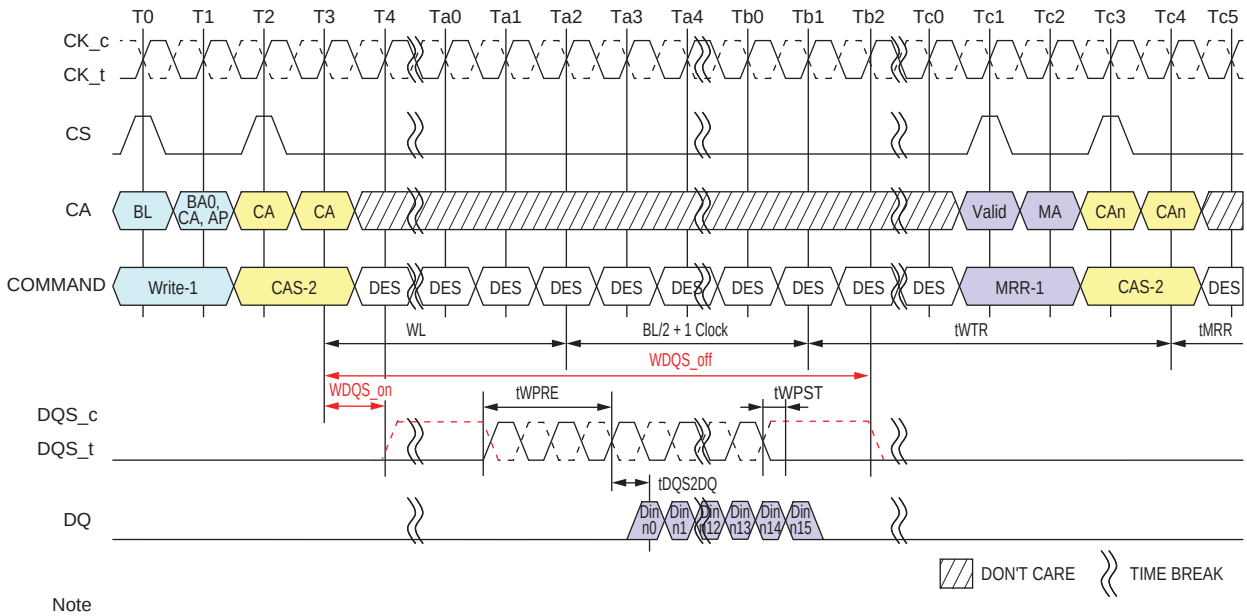

Note
1. Write BL=16, Write Postamble = 0.5nCK, DQ/DQS: VSSQ termination.
2. Only DES is allowed during tMRR period.
2. Din n = data-in to columnm n.
3. The minimum number of clock cycles from the burst write command to MRR command is WL + BL/2 + 1 + RU(tWTR/tCK).
4. tWTR starts at the rising edge of CK after the last latching edge of DQS.
5. DES commands except tMRR period are shown for ease of illustration; other commands may be valid at these times.

Figure 4.64 — Write to MRR Timing

4.20.2 MRR after Power-Down Exit

Following the power-down state, an additional time, tMRRI, is required prior to issuing the mode register read (MRR) command. This additional time (equivalent to tRCD) is required in order to be able to maximize power-down current savings by allowing more power-up time for the MRR data path after exit from power-down mode.

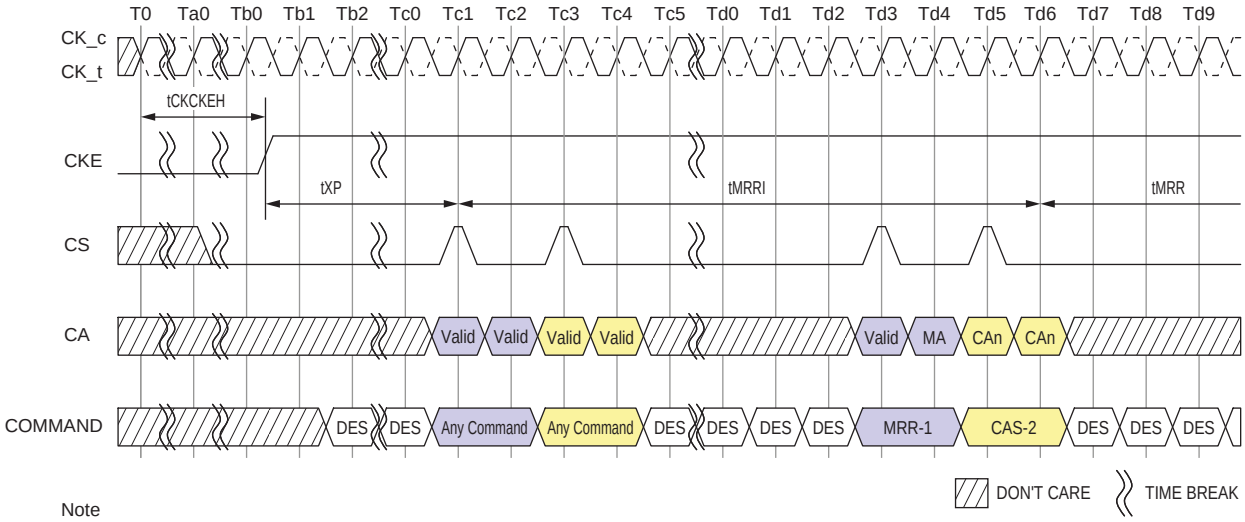

Note
1. Only DES is allowed during tMRR period.
2. DES commands except tMRR period are shown for ease of illustration; other commands may be valid at these times.

Figure 4.65 — MRR Following Power-Down

Table — 4.24 Mode Register Read/Write AC timing

Parameter	Symbol	Min/ Max	Data Rate	Unit	Note
Mode Register Read/Write Timing					
Additional time after tXP has expired until MRR command may be issued	tMRRI	Min	tRCD + 3nCK	-	
MODE REGISTER READ command period	tMRR	Min	8	nCK	
MODE REGISTER WRITE command period	tMRW	Min	MAX(10ns, 10nCK)	-	
Mode register set command delay	tMRD	Min	max(14ns, 10nCK)	-	

4.21 Mode Register Write (MRW) Operation

The Mode Register Write (MRW) command is used to write configuration data to the mode registers. The MRW command is initiated by setting CKE, CS, and CA[5:0] to valid levels at a rising edge of the clock (see Table 4.68, Command Truth Table). The mode register address and the data written to the mode registers is contained in CA[5:0] according to Table 4.68. The MRW command period is defined by tMRW. Mode register Writes to read-only registers have no impact on the functionality of the device.

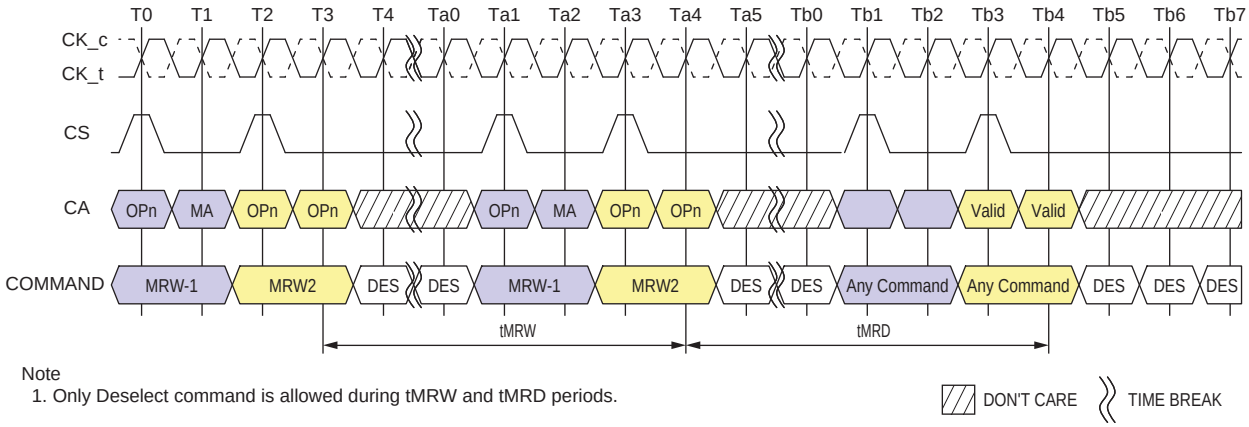

Note
1. Only Deselect command is allowed during tMRW and tMRD periods.

Figure 4.66 — Mode Register Write Timing

4.21.1 Mode Register Write

MRW can be issued from either a Bank-Idle or Bank-Active state. Certain restrictions may apply for MRW from an Active state.

Table 4.25 — Truth Table for Mode Register Read (MRR) and Mode Register Write (MRW)

Current State	Command	Intermediate State	Next State
SDRAM		SDRAM	SDRAM
All Banks Idle	MRR	Mode Register Reading (All Banks Idle)	All Banks Idle
	MRW	Mode Register Writing (All Banks Idle)	All Banks Idle
Bank(s) Active	MRR	Mode Register Reading	Bank(s) Active
	MRW	Mode Register Writing	Bank(s) Active

Table 4.26 — MRR/MRW Timing Constraints: DQ ODT is Disable

From Command	To Command	Minimum Delay between "From Command" and "To Command"	Unit	Notes
MRR	MRR	tMRR	-	
	RD/RDA	tMRR	-	
	WR/WRA/ MWR/ MWRA	RL+RU(tDQSCK(max)/tCK)+BL/2+ 3 -WL	nCK	
	MRW	RL+RU(tDQSCK(max)/tCK)+BL/2+ 3	nCK	
RD/RDA	MRR	BL/2	nCK	
WR/WRA/ MWR/MWRA		WL+1+BL/2+RU(tWTR/tCK)	nCK	
MRW		tMRD	-	
Power Down Exit		tXP+tMRRI	-	
MRW	RD/RDA	tMRD	-	
	WR/WRA/ MWR/ MWRA	tMRD	-	
	MRW	tMRW	-	
RD/ RD FIFO/ RD DQ CAL	MRW	RL+BL/2+RU(tDQSCKmax/tCK) +RD(tRPST) +max(RU(7.5ns/tCK),8nCK)	nCK	
RD with Auto-Precharge		RL+BL/2+RU(tDQSCKmax/tCK) +RD(tRPST) +max(RU(7.5ns/tCK),8nCK)+nRTP-8	nCK	
WR/ MWR/ WR FIFO		WL+1+BL/2+max(RU(7.5ns/tCK),8nCK)	nCK	
WR/MWR with Auto-Precharge		WL+1+BL/2+max(RU(7.5ns/tCK),8nCK)+nWR	nCK	

Table 4.27 — MRR/MRW Timing Constraints: DQ ODT is Enable

From Command	To Command	Minimum Delay between "From Command" and "To Command"	Unit	Notes
MRR	MRR	Same as ODT Disable Case	-	
	RD/RDA			
	WR/WRA/ MWR/ MWRA	RL+RU(tDQSCK(max)/tCK)+BL/2+3 -ODTLon-RD(tODTon(min)/tCK)	nCK	
	MRW	Same as ODT Disable Case	-	
RD/RDA	MRR	Same as ODT Disable Case	-	
WR/WRA/ MWR/MWRA				
MRW				
Powe Down Exit				
MRW	RD/RDA	Same as ODT Disable Case	-	
	WR/WRA/ MWR/ MWRA			
	MRW			
RD/ RD FIFO/ RD DQ CAL	MRW	Same as ODT Disable Case	-	
RD with Auto-Precharge				
WR/ MWR/ WR FIFO				
WR/MWR with Auto-Precharge				

4.22 V_{REF} Current Generator (VRCG)

LPDDR4 SDRAM V_{REF} current generators (VRCG) incorporate a high current mode to reduce the settling time of the internal V_{REF}(DQ) and V_{REF}(CA) levels during training and when changing frequency set points during operation. The high current mode is enabled by setting MR13[OP3] = 1. Only Deselect commands may be issued until tVRCG_ENABLE is satisfied. tVRCG_ENABLE timing is shown in Figure 4.67.

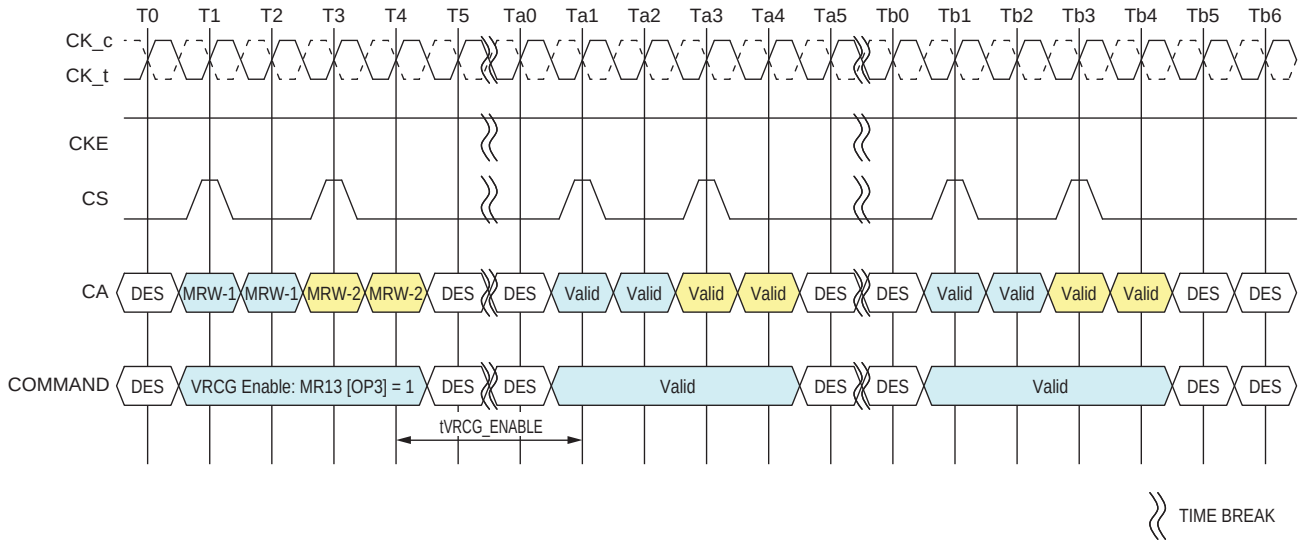

Figure 4.67 — VRCG Enable timing

VRCG high current mode is disabled by setting MR13[OP3] = 0. Only Deselect commands may be issued until tVRCG_DISABLE is satisfied. tVRCG_DISABLE timing is shown in Figure 4.68.

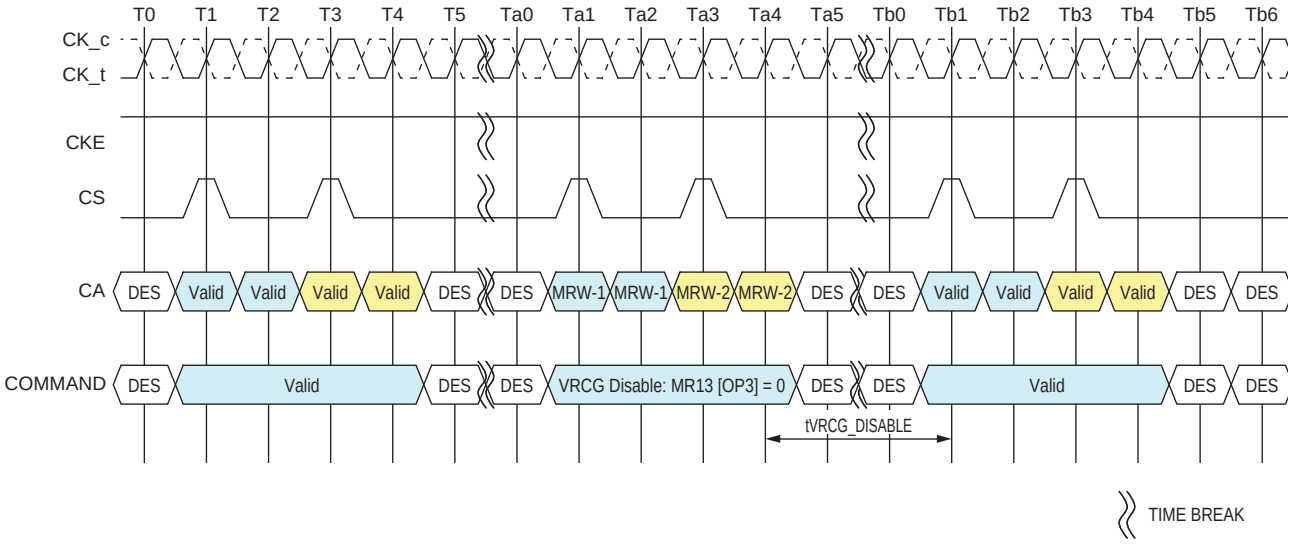

Figure 4.68 — VRCG Disable timing

Note that LPDDR4 SDRAM devices support V_{REF}(CA) and V_{REF}(DQ) range and value changes without enabling VRCG high current mode.

Table 4.28 — VRCG Enable/Disable Timing

Parameter	Symbol	MIN	MAX	Units	NOTE
V_{REF} high current mode enable time	tVRCG_ENABLE	-	200	ns	
V_{REF} high current mode disable time	tVRCG_DISABLE	-	100	ns	

4.23 CA V_{REF}Training

The DRAM internal CA V_{REF} specification parameters are voltage operating range, stepsize, V_{REF} set tolerance, V_{REF} step time and V_{REF} valid level.

The voltage operating range specifies the minimum required V_{REF} setting range for LPDDR4 DRAM devices. The minimum range is defined by V_{REF}max and V_{REF}min as depicted in Figure 4.69.

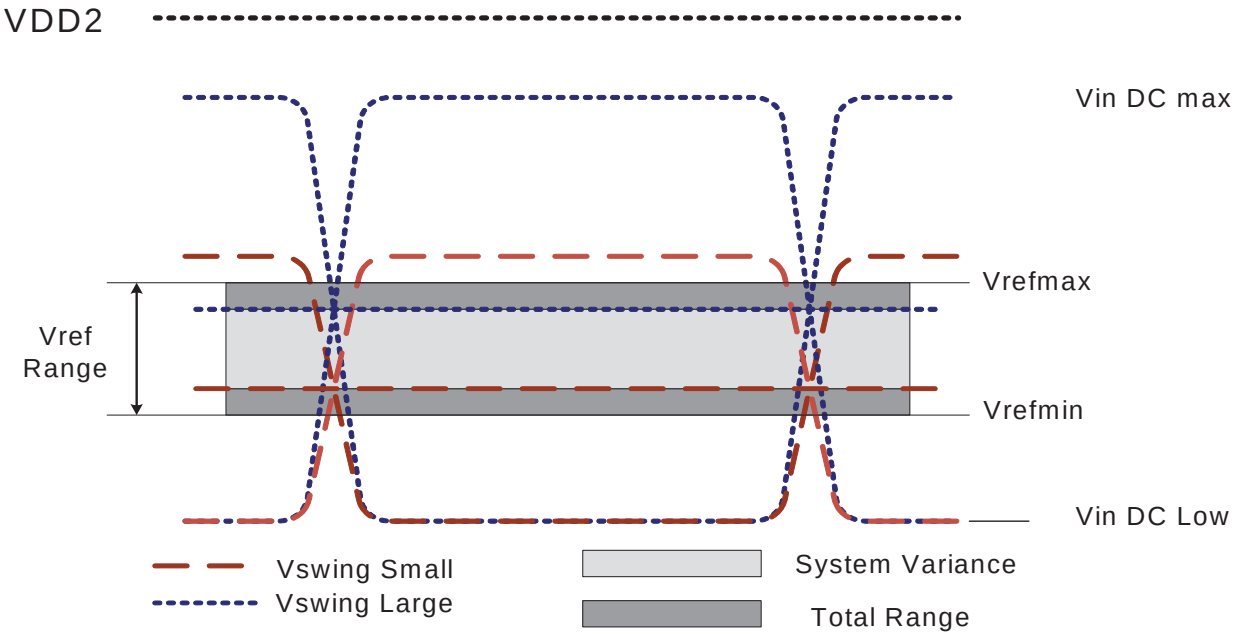

Figure 4.69 — V_{REF} operating range(V_{REF}min, V_{REF}max)

The V_{REF} stepsize is defined as the stepsize between adjacent steps. However, for a given design, DRAM has one value for V_{REF} step size that falls within the range.

The V_{REF} set tolerance is the variation in the V_{REF} voltage from the ideal setting. This accounts for accumulated error over multiple steps. There are two ranges for V_{REF} set tolerance uncertainity. The range of V_{REF} set tolerance uncertainity is a function of number of steps n.

The V_{REF} set tolerance is measured with respect to the ideal line which is based on the two endpoints. Where the endpoints are at the min and max V_{REF} values for a specified range. An illustration depicting an example of the stepsize and V_{REF} set tolerance is below.

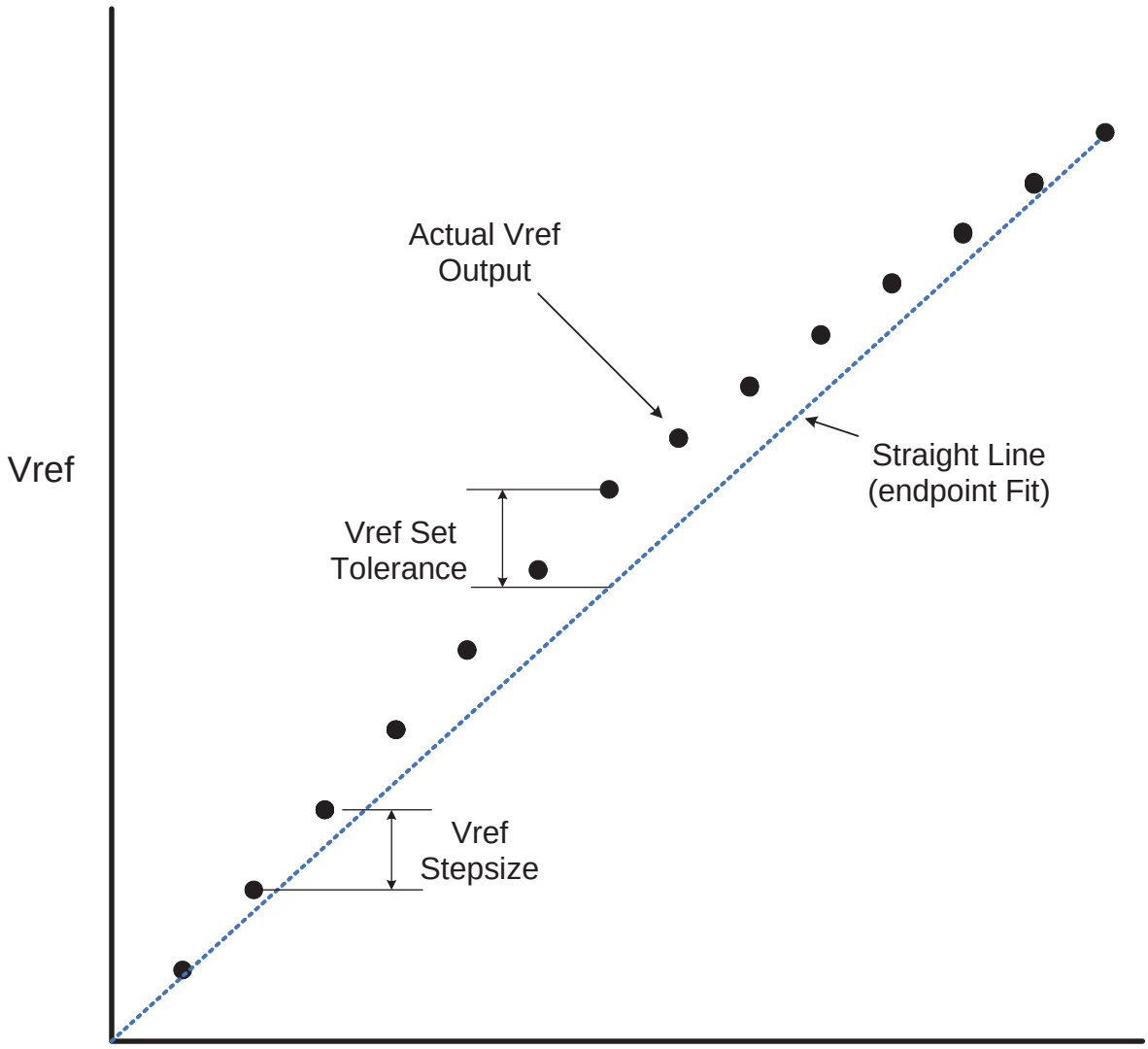

Figure 4.70 — Example of V_{REF} set tolerance(max case only shown) and stepsize

The V_{REF} increment/decrement step times are define by V_{REF}_time-short, Middle and long. The V_{REF}_time-short, V_{REF}_time-Middle and V_{REF}_time-long is defined from TS to TE as shown in the figure 4.71 below where TE is referenced to when the V_{REF} voltage is at the final DC level within the V_{REF} valid tolerance(V_{REF}_val_tol).

The V_{REF} valid level is defined by V_{REF}_val tolerance to qualify the step time TE as shown in Figure 4.71. This parameter is used to insure an adequate RC time constant behavior of the voltage level change after any V_{REF} increment/decrement adjustment. This parameter is only applicable for DRAM component level validation/characerization.

V_{REF}_time-Short is for a single stepsize increment/decrement change in V_{REF} voltage.
V_{REF}_time-Middle is at least 2 stepsizes increment/decrement change within the same V_{REF}(CA) range in V_{REF} voltage.
V_{REF}_time-Long is the time including up to V_{REF}min to V_{REF}max or V_{REF}max to V_{REF}min change across the V_{REF}(CA) Range in V_{REF} voltage.

TS - is referenced to MRS command clock
TE - is referenced to the V_{REF}_val_tol

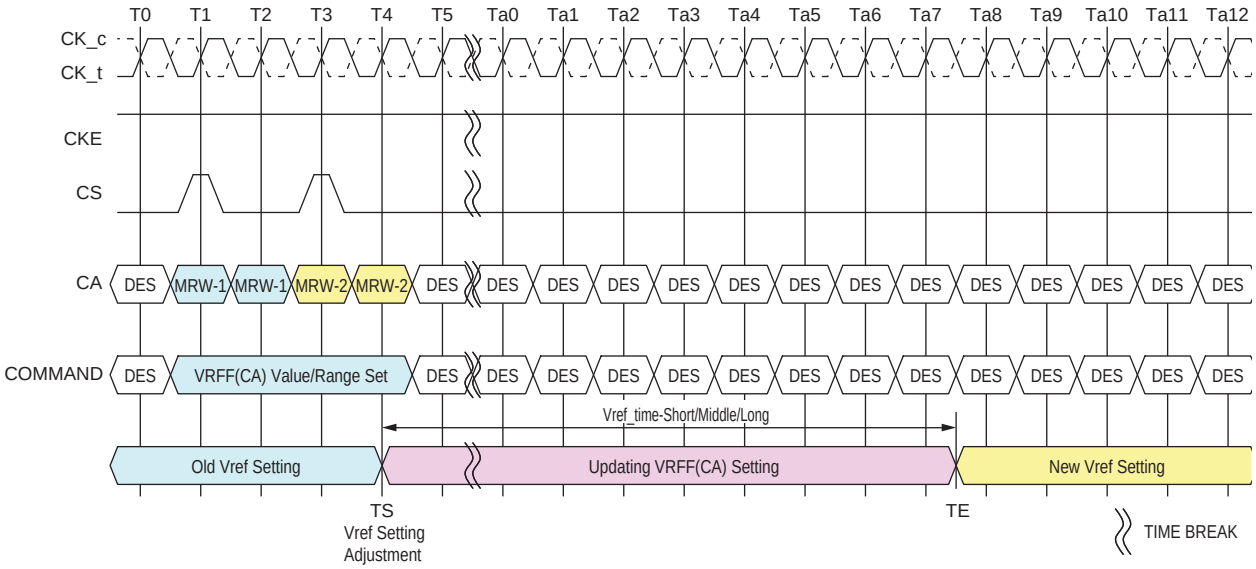

Figure 4.71 — V_{REF}_time for Short, Middle and Long Timing Diagram

The MRW command to the mode register bits are as follows.

MR12 OP[5:0] : V_{REF}(CA) Setting
MR12 OP[6] : V_{REF}(CA) Range

The minimum time required between two V_{REF} MRS commands is V_{REF}_time-short for single step and V_{REF}_time-Middle for a full voltage range step.

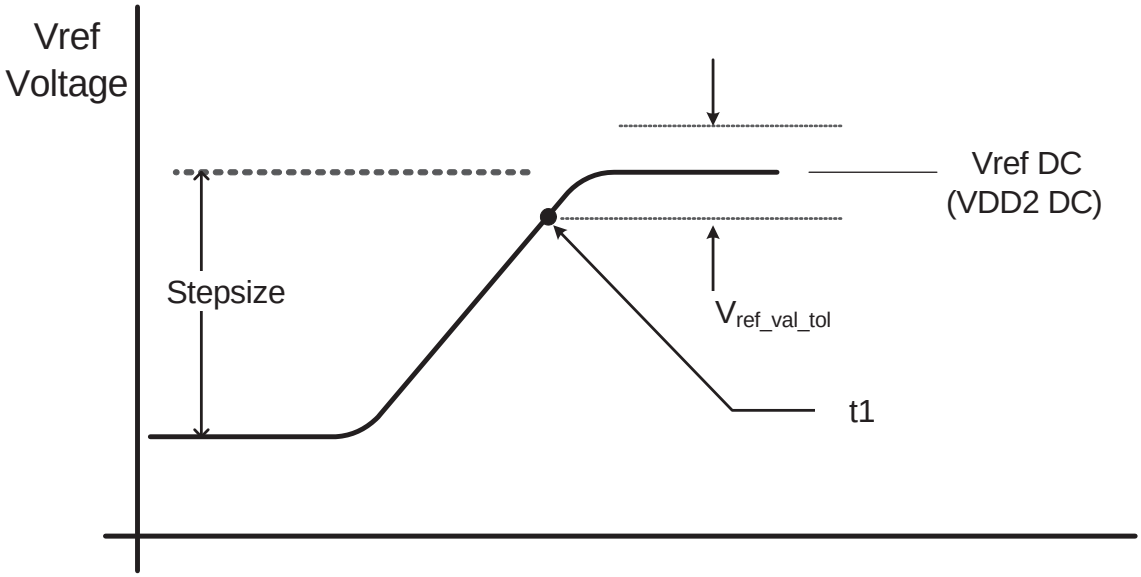

— V_{REF} step single stepsize increment case

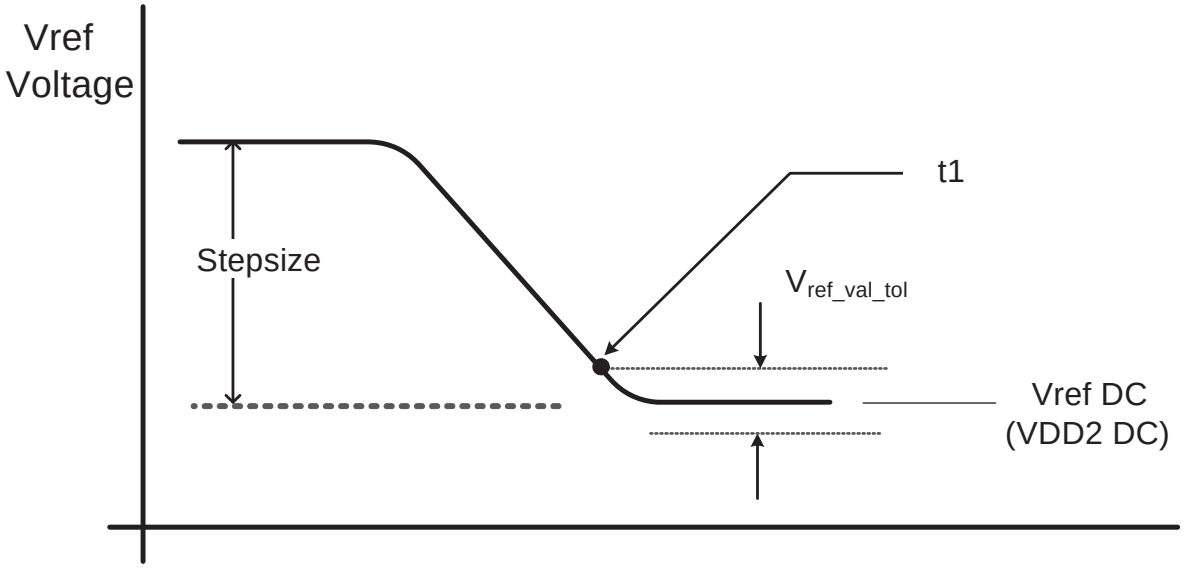

4.73 — V_{REF} step single stepsize decrement case

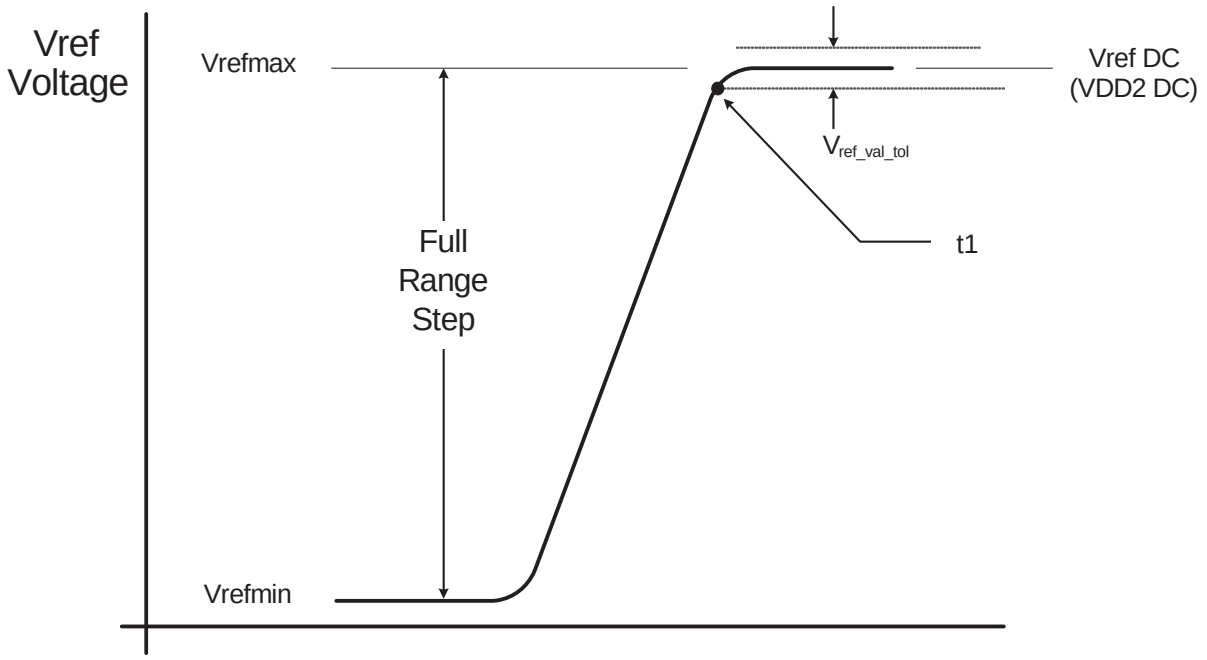

4.74 — V_{REF} full step from V_{REF}min to V_{REF}max case

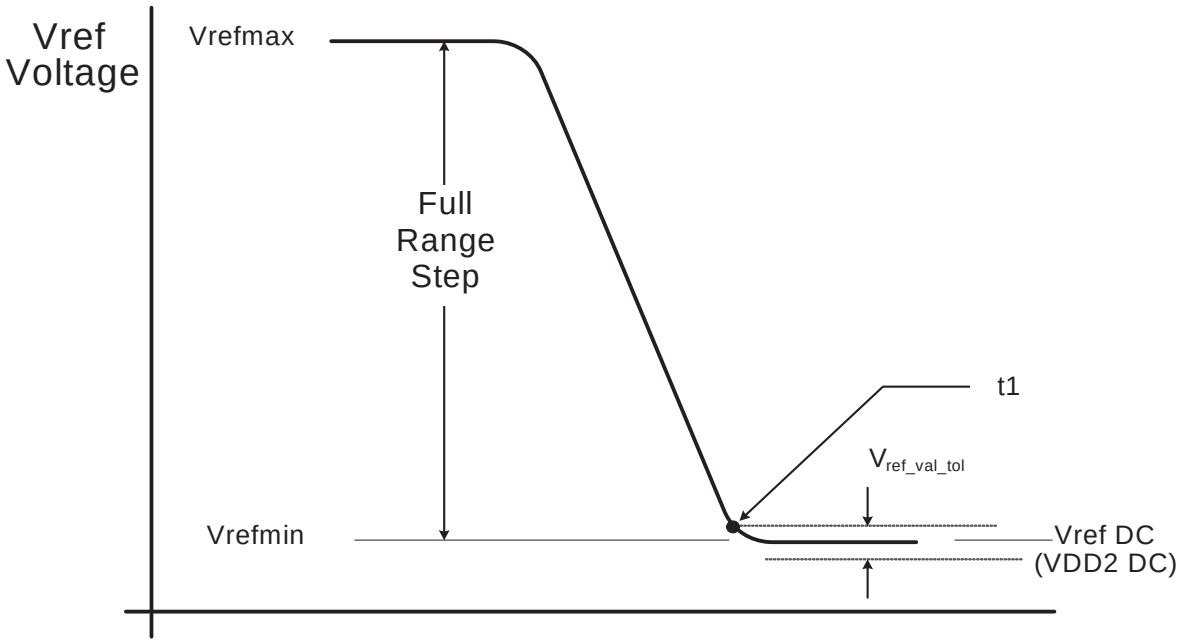

4.75 — V_{REF} full step from V_{REF}max to V_{REF}min case

Table 4.29 contains the CA internal V_{REF} specifications that will be characterized at the component level for compliance.

Table 4.29(a) — CA Internal V_{REF} Specifications for LPDDR4

Parameter	Symbol	Min	Typ	Max	Unit	Notes
V_{REF} Max operating point Range0	V_{REF}_max_R0	-	-	30%	V_{DD2}	1,11
V_{REF} Min operating point Range0	V_{REF}_min_R0	10%	-	-	V_{DD2}	1,11
V_{REF} Max operating point Range1	V_{REF}_max_R1	-	-	42%	V_{DD2}	1,11
V_{REF}Min operating point Range1	V_{REF}_min_R1	22%	-	-	V_{DD2}	1,11
V_{REF} Stepsize	V_{REF}_step	0.30%	0.40%	0.50%	V_{DD2}	2
V_{REF}Set Tolerance	V_{REF}_set_tol	-1.00%	0.00%	1.00%	V_{DD2}	3,4,6
		-0.10%	0.00%	0.10%	V_{DD2}	3,5,7
V_{REF} Step Time	V_{REF}_time-Short	-	-	100	ns	8
	V_{REF}_time_Middle	-	-	200	ns	12
	V_{REF}_time-Long	-	-	250	ns	9
	V_{REF}_time_weak	-	-	1	ms	13,14
V_{REF} Valid tolerance	V_{REF}_val_tol	-0.10%	0.00%	0.10%	V_{DD2}	10

Note.

1. V_{REF} DC voltage referenced to V_{DD2}_DC.
2. V_{REF} stepsize increment/decrement range. V_{REF} at DC level.
3. V_{REF}_new = V_{REF}_old + n*V_{REF}_step; n= number of steps; if increment use "+"; If decrement use "-".
4. The minimum value of V_{REF} setting tolerance = V_{REF}_new - 1.0%*V_{DD2}. The maximum value of V_{REF} setting tolerance = V_{REF}_new + 1.0%*V_{DD2}. For n>4.
5. The minimum value of V_{REF} setting tolerance = V_{REF}_new - 0.10%*V_{DD2}. The maximum value of V_{REF} setting tolerance = V_{REF}_new + 0.10%*V_{DD2}. For n≤ 4.
6. Measured by recording the min and max values of the V_{REF} output over the range, drawing a straight line between those points and comparing all other V_{REF} output settings to that line.
7. Measured by recording the min and max values of the V_{REF} output across 4 consecutive steps(n=4), drawing a straight line between those points and comparing all other V_{REF} output settings to that line.
8. Time from MRS command to increment or decrement one step size for V_{REF}.
9. Time from MRS command to increment or decrement V_{REF}min to V_{REF}max or V_{REF}max to V_{REF}min change across the V_{REF}(CA) Range in V_{REF} voltage.
10. Only applicable for DRAM component level test/characterization purpose. Not applicable for normal mode of operation. V_{REF} valid is to qualify the step times which will be characterized at the component level.
11. DRAM range 0 or 1 set by MR12 OP[6].
12. Time from MRS command to increment or decrement more than one step size up to a full range of V_{REF} voltage withiin the same V_{REF}(CA) range.
13. Applies when VRCG high current mode is not enabled, specified by MR13[OP3] = 0.
14. V_{REF}_time_weak covers all V_{REF}(CA) Range and Value change conditions are applied to V_{REF}_time_Short/Middle/Long.

Table 4.29(b) — CA Internal V_{REF} Specifications for LPDDR4X

Parameter	Symbol	Min	Typ	Max	Unit	Notes
V_{REF} Max operating point Range0	V_{REF}_max_R0	-	-	44.9%	V_{DDQ}	1,11
V_{REF} Min operating point Range0	V_{REF}_min_R0	15%	-	-	V_{DDQ}	1,11
V_{REF} Max operating point Range1	V_{REF}_max_R1	-	-	62.9%	V_{DDQ}	1,11
V_{REF}Min operating point Range1	V_{REF}_min_R1	32.9%	-	-	V_{DDQ}	1,11
V_{REF} Stepsize	V_{REF}_step	0.50%	0.60%	0.70%	V_{DDQ}	2
V_{REF}Set Tolerance	V_{REF}_set_tol	-11	0	11	mV	3,4,6
		-1.1	0	1.1	mV	3,5,7
V_{REF} Step Time	V_{REF}_time_Short	-	-	100	ns	8
	V_{REF}_time_Middle	-	-	200	ns	12
	V_{REF}_time_Long	-	-	250	ns	9
	V_{REF}_time_weak	-	-	1	ms	13,14
V_{REF} Valid tolerance	V_{REF}_val_tol	-0.10%	0.00%	0.10%	V_{DDQ}	10

NOTE 1 V_{REF} DC voltage referenced to V_{DDQ}_DC.

NOTE 2 V_{REF} stepsize increment/decrement range. V_{REF} at DC level.

NOTE 3 V_{REF}_new = V_{REF}_old + n*V_{REF}_step; n= number of steps; if increment use "+"; if decrement use "-".

NOTE 4 The minimum value of V_{REF} setting tolerance = V_{REF}_new – 11 mV. The maximum value of V_{REF} setting tolerance = V_{REF}_new + 11 mV. For n>4.

NOTE 5 The minimum value of V_{REF} setting tolerance = V_{REF}_new -1.1 mV. The maximum value of V_{REF} setting tolerance = V_{REF}_new + 1.1 mV. For n ≤ 4.

NOTE 6 Measured by recording the min and max values of the V_{REF} output over the range, drawing a straight line between those points and comparing all other V_{REF} output settings to that line.

NOTE 7 Measured by recording the min and max values of the V_{REF} output across 4 consecutive steps(n=4), drawing a straight line between those points and comparing all other V_{REF} output settings to that line.

NOTE 8 Time from MRS command to increment or decrement one step size for V_{REF}.

NOTE 9 Time from MRS command to increment or decrement V_{REF}min to V_{REF}max or V_{REF}max to V_{REF}min change across the V_{REF}CA Range in V_{REF} voltage.

NOTE 10 Only applicable for DRAM component level test/characterization purpose. Not applicable for normal mode of operation. V_{REF} valid is to qualify the step times which will be characterized at the component level.

NOTE 11 DRAM range 0 or 1 set by MR12 OP[6].

NOTE 12 Time from MRS command to increment or decrement more than one step size up to a full range of V_{REF} voltage withiin the same V_{REF}CA range.

NOTE 13 Applies when VRCG high current mode is not enabled, specified by MR13[OP3] = 0.

NOTE 14 V_{REF}_time_weak covers all V_{REF}(CA) Range and Value change conditions are applied to V_{REF}_time_Short/Middle/Long.

4.24 DQ V_{REF} Training

The DRAM internal DQ V_{REF} specification parameters are voltage operating range, stepsize, V_{REF} set tolerance, V_{REF} step time and V_{REF}valid level.

The voltage operating range specifies the minimum required V_{REF} setting range for LPDDR4 DRAM devices. The minimum range is defined by V_{REF}max and V_{REF}min as depicted in Figure 4.76.

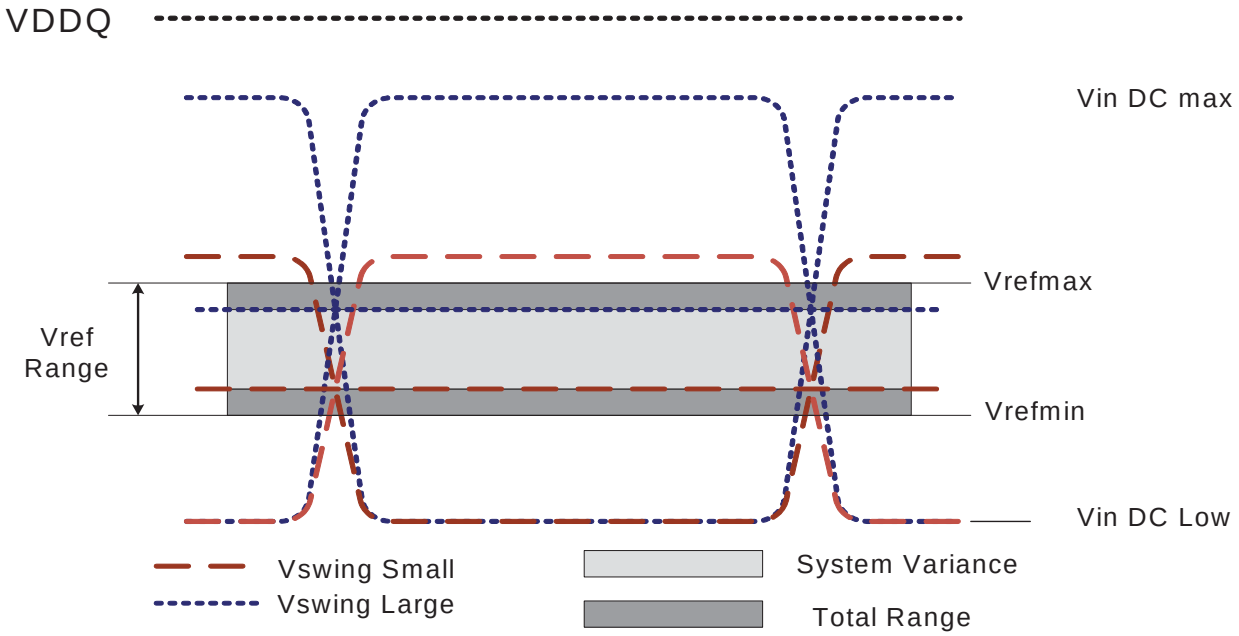

Figure 4.76 — V_{REF} operating range(V_{REF}min, V_{REF}max)

The V_{REF} stepsize is defined as the stepsize between adjacent steps. However, for a given design, DRAM has one value for V_{REF} step size that falls within the range.

The V_{REF} set tolerance is the variation in the V_{REF} voltage from the ideal setting. This accounts for accumulated error over multiple steps. There are two ranges for V_{REF} set tolerance

uncertainity. The range of V_{REF} set tolerance uncertainity is a function of number of steps n.

The V_{REF} set tolerance is measured with respect to the ideal line which is based on the two endpoints. Where the endpoints are at the min and max V_{REF} values for a specified range. An illustration depicting an example of the stepsize and V_{REF} set tolerance shown in Figure 4.77.

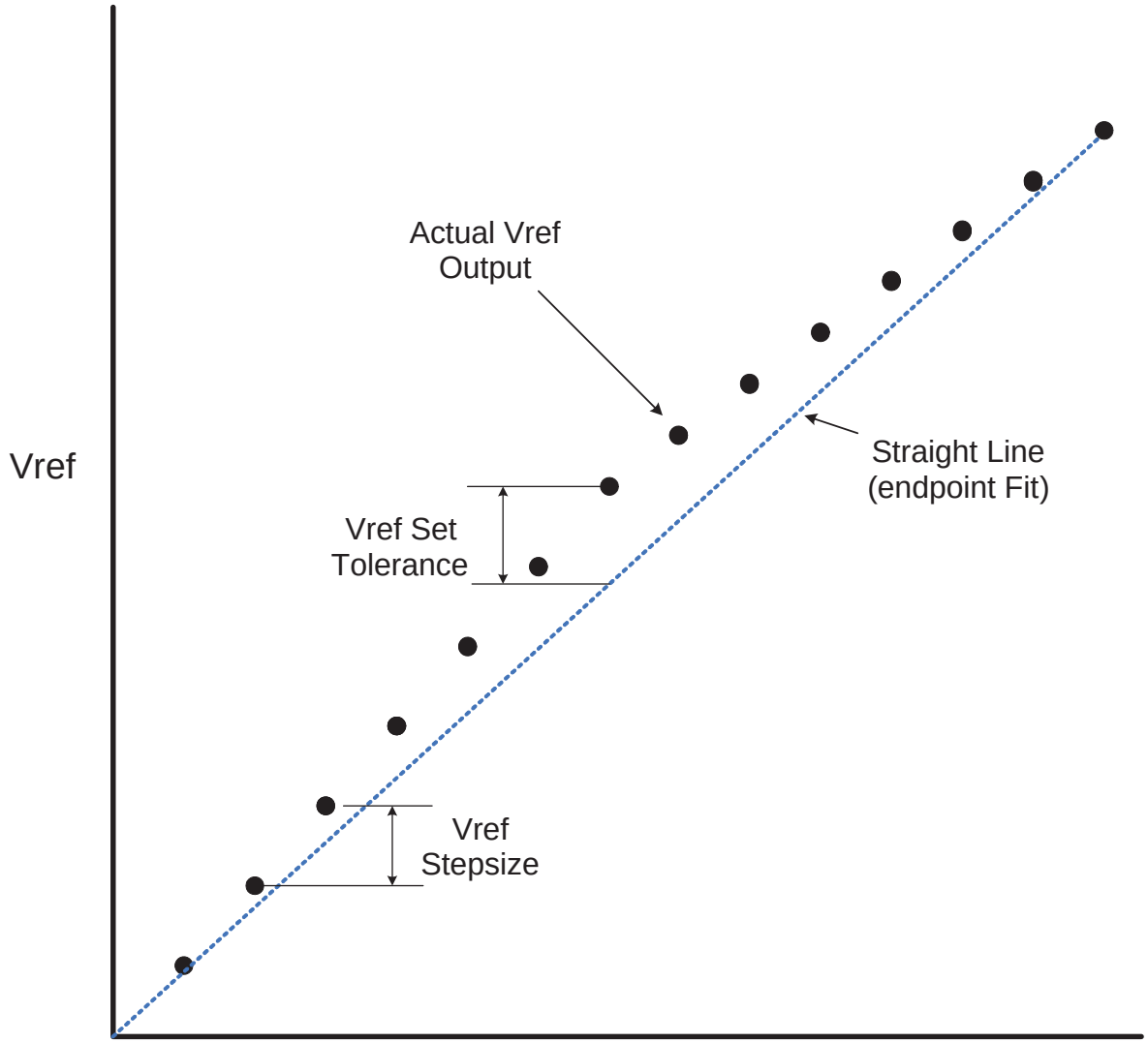

Figure 4.77 — Example of V_{REF} set tolerance(max case only shown) and stepsize

The V_{REF} increment/decrement step times are define by V_{REF}_time-short, Middle and long. The V_{REF}_time-short, V_{REF}_time-Middle and V_{REF}_time-long is defined from TS to TE as shown in Figure 4.78 where TE is referenced to when the V_{REF} voltage is at the final DC level within the V_{REF} valid tolerance(V_{REF}_val_tol).

The V_{REF} valid level is defined by V_{REF}_val tolerance to qualify the step time TE as shown in Figure 4.78.

This parameter is used to insure an adequate RC time constant behavior of the voltage level change after any V_{REF} increment/decrement adjustment. This parameter is only applicable for DRAM component level validation/characerization.

V_{REF}_time-Short is for a single stepsize increment/decrement change in V_{REF} voltage.
V_{REF}_time-Middle is at least 2 stepsizes increment/decrement change within the same V_{REF}(DQ) range in V_{REF} voltage.
V_{REF}_time-Long is the time including up to V_{REF}min to V_{REF}max or V_{REF}max to V_{REF}min change across the V_{REF}(DQ) Range in V_{REF} voltage.

TS - is referenced to MRS command clock
TE - is referenced to the V_{REF}_val_tol

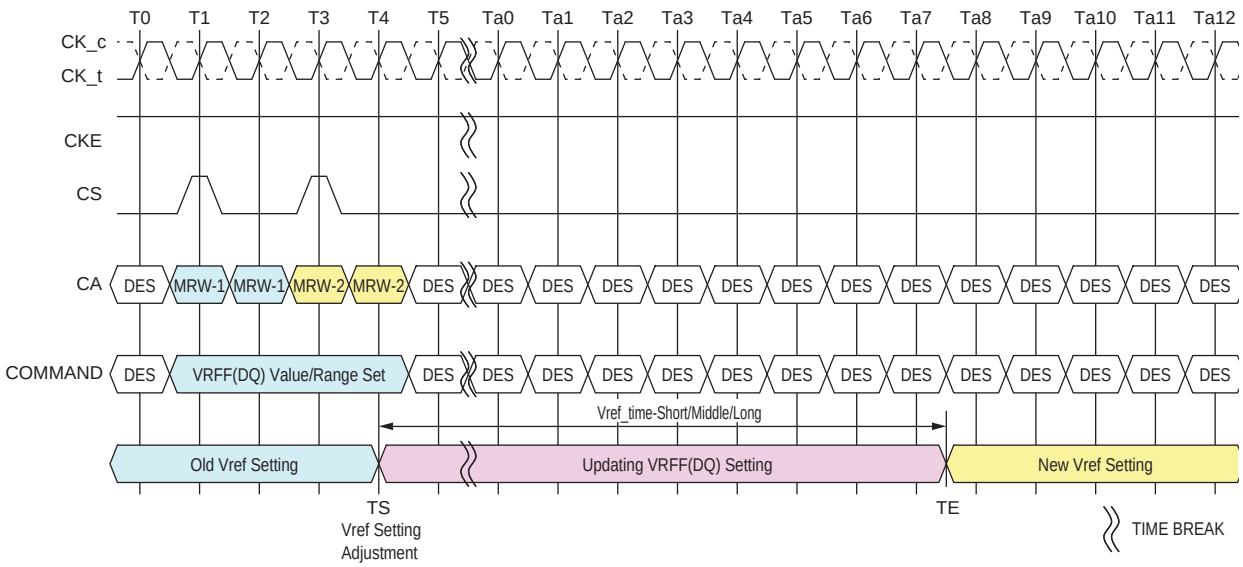

Figure 4.78 — V_{REF}_time for Short, Middle and Long Timing Diagram

The MRW command to the mode register bits are as follows.

MR14 OP[5:0] : V_{REF}(DQ) Setting
MR14 OP[6] : V_{REF}(DQ) Range

The minimum time required between two V_{REF} MRS commands is V_{REF}_time-short for single step and V_{REF}_time-Middle for a full voltage range step.

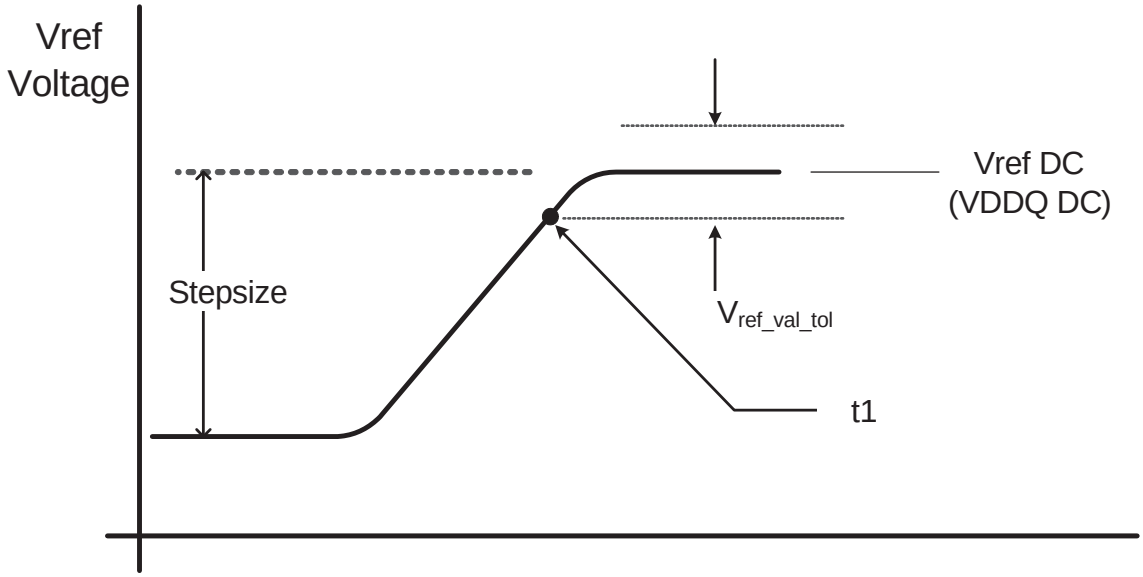

— V_{REF} step single stepsize increment case

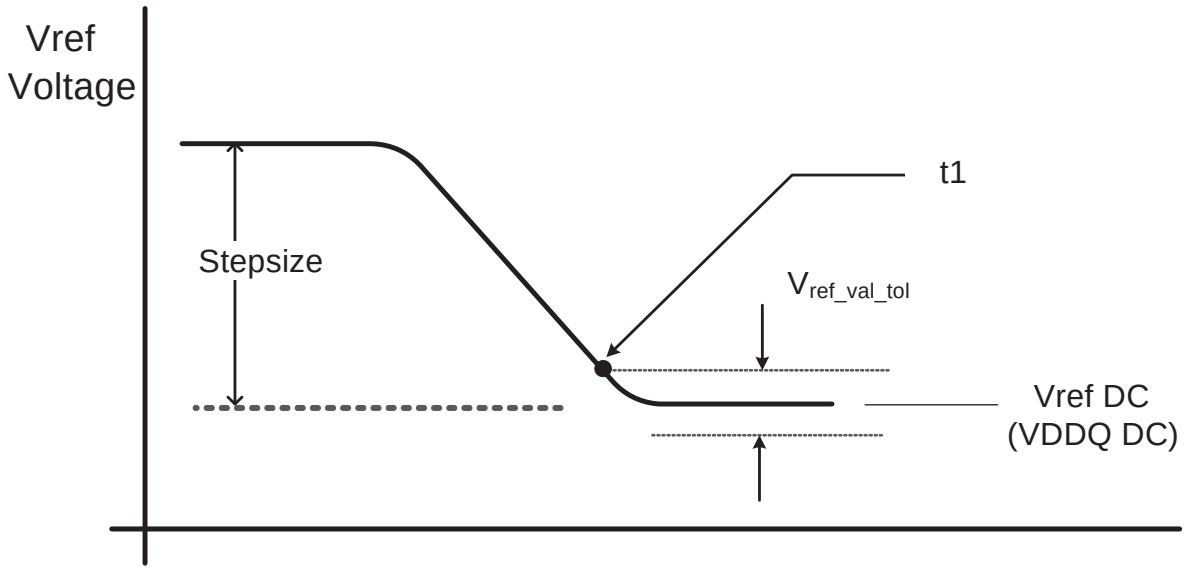

4.80 — V_{REF} step single stepsize decrement case

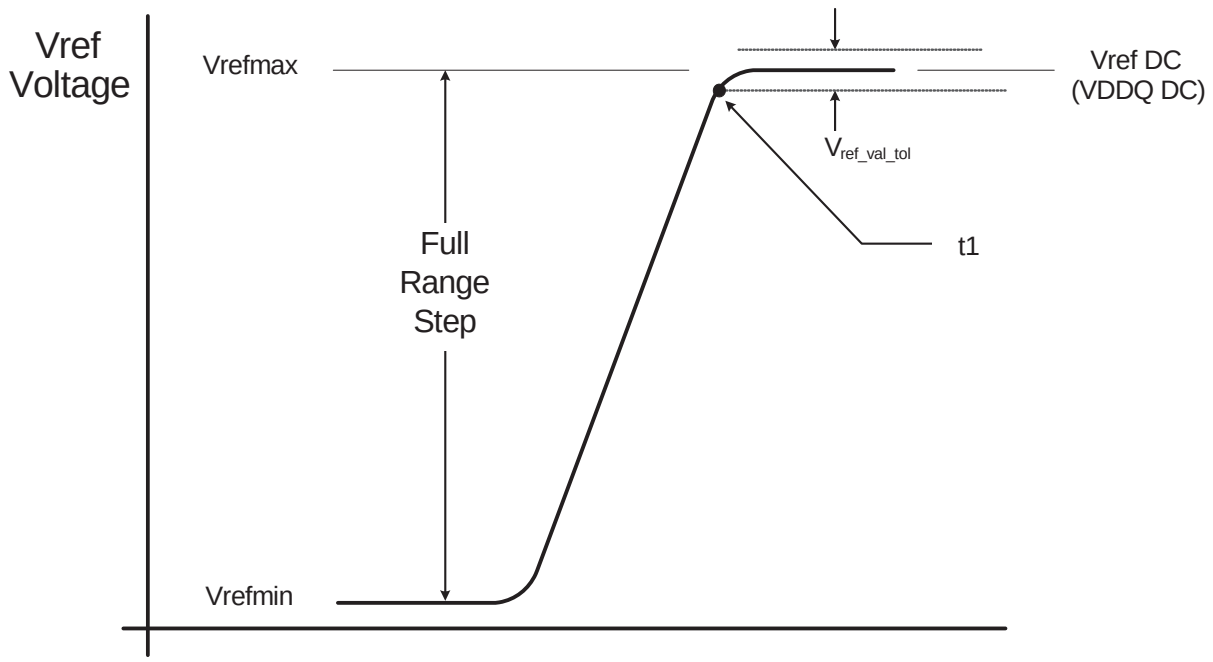

4.81 — V_{REF} full step from V_{REF}min to V_{REF}max case

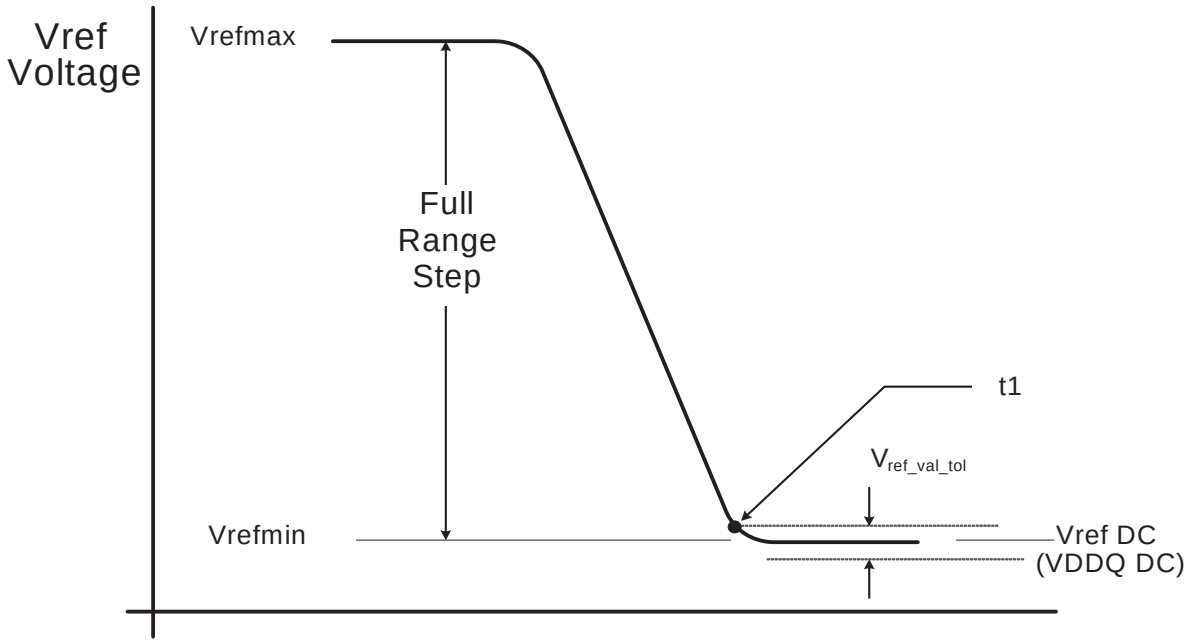

Figure 4.82 — V_{REF} full step from V_{REF}max to V_{REF}min case

Table 4.30 contains the DQ internal V_{REF} specifications that will be characterized at the component level for compliance.

Table 4.30(a) — DQ Internal V_{REF} Specifications for LPDDR4

Parameter	Symbol	Min	Typ	Max	Unit	Notes
V_{REF} Max operating point Range0	V_{REF}_max_R0	-	-	30%	V_{DDQ}	1,11
V_{REF} Min operating point Range0	V_{REF}_min_R0	10%	-	-	V_{DDQ}	1,11
V_{REF} Max operating point Range1	V_{REF}_max_R1	-	-	42%	V_{DDQ}	1,11
V_{REF} Min operating point Range1	V_{REF}_min_R1	22%	-	-	V_{DDQ}	1,11
V_{REF} Stepsize	V_{REF}_step	0.30%	0.40%	0.50%	V_{DDQ}	2
V_{REF} Set Tolerance	V_{REF}_set_tol	-1.00%	0.00%	1.00%	V_{DDQ}	3,4,6
		-0.10%	0.00%	0.10%	V_{DDQ}	3,5,7
V_{REF} Step Time	V_{REF}_time-Short	-	-	100	ns	8
	V_{REF}_time_Middle	-	-	200	ns	12
	V_{REF}_time-Long	-	-	250	ns	9
	V_{REF}_time_weak	-	-	1	ms	13,14
V_{REF} Valid tolerance	V_{REF}_val_tol	-0.10%	0.00%	0.10%	V_{DDQ}	10

Note.

1. V_{REF} DC voltage referenced to V_{DDQ}_DC.
2. V_{REF} stepsize increment/decrement range. V_{REF} at DC level.
3. V_{REF}_new = V_{REF}_old + n*V_{REF}_step; n= number of steps; if increment use "+"; If decrement use "-".
4. The minimum value of V_{REF} setting tolerance = V_{REF}_new - 1.0%*V_{DDQ}. The maximum value of V_{REF} setting tolerance = V_{REF}_new + 1.0%*V_{DDQ}. For n>4.
5. The minimum value of V_{REF} setting tolerance = V_{REF}_new - 0.10%*V_{DDQ}. The maximum value of V_{REF} setting tolerance = V_{REF}_new + 0.10%*V_{DDQ}. For n< 4.
6. Measured by recording the min and max values of the V_{REF} output over the range, drawing a straight line between those points and comparing all other V_{REF} output settings to that line.
7. Measured by recording the min and max values of the V_{REF} output across 4 consectuive steps(n=4), drawing a straight line between those points and comparing all other V_{REF} output settings to that line.
8. Time from MRS command to increment or decrement one step size for V_{REF}.
9. Time from MRS command to increment or decrement V_{REF}min to V_{REF}max or V_{REF}fmax to V_{REF}min change across the V_{REF}(DQ) Range in V_{REF} voltage.
10. Only applicable for DRAM component level test/characterization purpose. Not applicable for normal mode of operation. V_{REF} valid is to qualify the step times which will be characterized at the component level.
11. DRAM range 0 or 1 set by MR14 OP[6].
12. Time from MRS command to increment or decrement more than one step size up to a full range of V_{REF} voltage withiin the same V_{REF}(DQ) range.
13. Applies when VRCG high current mode is not enabled, specified by MR13[OP3] = 0.
14. V_{REF}_time_weak covers all V_{REF}(DQ) Range and Value change conditions are applied to V_{REF}_time_Short/Middle/Long.

Table 4.30(b) — DQ Internal V_{REF} Specifications for LPDDR4X

Parameter	Symbol	Min	Typ	Max	Unit	Notes
V_{REF} Max operating point Range0	V_{REF}_max_R0	-	-	44.9%	V_{DDQ}	1,11
V_{REF} Min operating point Range0	V_{REF}_min_R0	15%	-	-	V_{DDQ}	1,11
V_{REF} Max operating point Range1	V_{REF}_max_R1	-	-	62.9%	V_{DDQ}	1,11
V_{REF} Min operating point Range1	V_{REF}_min_R1	32.9%	-	-	V_{DDQ}	1,11
V_{REF} Stepsize	V_{REF}_step	0.50%	0.60%	0.70%	V_{DDQ}	2
V_{REF} Set Tolerance	V_{REF}_set_tol	-11	0	11	mV	3,4,6
		-1.1	0	1.1	mV	3,5,7
V_{REF} Step Time	V_{REF}_time_Short	-	-	100	ns	8
	V_{REF}_time_Middle	-	-	200	ns	12
	V_{REF}_time_Long	-	-	250	ns	9
	V_{REF}_time_weak	-	-	1	ms	13,14
V_{REF} Valid tolerance	V_{REF}_val_tol	-0.10%	0.00%	0.10%	V_{DDQ}	10

NOTE 1 V_{REF} DC voltage referenced to V_{DDQ}_DC.

NOTE 2 V_{REF} stepsize increment/decrement range. V_{REF} at DC level.

NOTE 3 V_{REF}_new = V_{REF}_old + n*V_{REF}_step; n= number of steps; if increment use "+"; If decrement use "-".

NOTE 4 The minimum value of V_{REF} setting tolerance = V_{REF}_new – 11 mV. The maximum value of V_{REF} setting tolerance = V_{REF}_new + 11 mV. For n>4.

NOTE 5 The minimum value of V_{REF} setting tolerance = V_{REF}_new – 1.1 mV. The maximum value of V_{REF} setting tolerance = V_{REF}_new + 1.1 mV. For n⊠ 4.

NOTE 6 Measured by recording the min and max values of the V_{REF} output over the range, drawing a straight line between those points and comparing all other V_{REF} output settings to that line.

NOTE 7 Measured by recording the min and max values of the V_{REF} output across 4 consecutive steps(n=4), drawing a straight line between those points and comparing all other V_{REF} output settings to that line.

NOTE 8 Time from MRS command to increment or decrement one step size for V_{REF}.

NOTE 9 Time from MRS command to increment or decrement V_{REF}min to V_{REF}max or V_{REF}fmax to V_{REF}min change across the V_{REF}DQ Range in V_{REF} voltage.

NOTE 10 Only applicable for DRAM component level test/characterization purpose. Not applicable for normal mode of operation. V_{REF} valid is to qualify the step times which will be characterized at the component level.

NOTE 11 DRAM range 0 or 1 set by MR14 OP[6].

NOTE 12 Time from MRS command to increment or decrement more than one step size up to a full range of V_{REF} voltage withiin the same V_{REF}DQ range.

NOTE 13 Applies when VRCG high current mode is not enabled, specified by MR13[OP3] = 0.

NOTE 14 V_{REF}_time_weak covers all V_{REF}(DQ) Range and Value change conditions are applied to V_{REF}_time_Short/Middle/Long.

4.25 Command Bus Training

4.25.1 Command Bus Training for x16 mode

The LPDDR4-SDRAM command bus must be trained before enabling termination for high-frequency operation. LPDDR4 provides an internal V_{REF}(CA) that defaults to a level suitable for un-terminated, low frequency operation, but the V_{REF}(CA) must be trained to achieve suitable receiver voltage margin for terminated, high-frequency operation. The training mode described here centers the internal V_{REF}(CA) in the CA data eye and at the same time allows for timing adjustments of the CS and CA signals to meet setup/hold requirements. Because it can be difficult to capture commands prior to training the CA inputs, the training mode described here uses a minimum of external commands to enter, train, and exit the Command Bus Training mode.

NOTE it is up to the system designer to determine what constitutes “low-frequency” and “high-frequency” based on the capabilities of the system. Low-frequency should then be defined as an operating frequency in which the system can reliably communicate with the SDRAM before Command Bus Training is executed.

The LPDDR4-SDRAM die has a bond pad (ODT_CA) for multi-rank operation. In a multi-rank system, the terminating rank should be trained first, followed by the non-terminating rank(s). See Section 4.41, ODT for more information.

The LPDDR4-SDRAM uses Frequency Set-Points to enable multiple operating settings for the die. The LPDDR4-SDRAM defaults to FSP-OP[0] at power-up, which has the default settings to operate in un-terminated, low-frequency environments. Prior to training, the mode register settings should be configured by setting MR13 OP[6]=1B (FSP-WR[1]) and setting all other mode register bits for FSP-OP[1] to the desired settings for high-frequency operation. Prior to entering Command Bus Training, the SDRAM will be operating from FSP-OP[x]. Upon Command Bus Training entry when CKE is driven LOW, the LPDDR4-SDRAM will automatically switch to the alternate FSP register set (FSP-OP[y]) and use the alternate register settings during training (See note 6 in Figure 4.83 for more information on FSP-OP register sets). Upon training exit when CKE is driven HIGH, the LPDDR4-SDRAM will automatically switch back to the original FSP register set (FSP-OP[x]), returning to the “known-good” state that was operating prior to training. The training values for V_{REF}(CA) are not retained by the DRAM in FSP-OP[y] registers, and must be written to the registers after training exit.

1. To enter Command Bus Training mode, issue a MRW-1 command followed by a MRW-2 command to set MR13 OP[0]=1B (Command Bus Training Mode Enabled).
2. After time tMRD, CKE may be set LOW, causing the LPDDR4-SDRAM to switch from FSP-OP[x] to FSP-OP[y], and completing the entry into Command Bus Training mode.
   A status of DQS_t, DQS_c, DQ and DMI are as follows, and ODT state of DQS_t, DQS_c, DQ and DMI will be followed by MR11 OP[2:0]: DQ ODT and MR13 OP[7]: FSP-OP except output pins.
   - DQS_t[0], DQS_c[0] become input pins for capturing DQ[6:0] levels by its toggling.
   - DQ[5:0] become input pins for setting V_{REF}(CA) Level.
   - DQ[6] becomes a input pin for setting V_{REF}(CA) Range.
   - DQ[7] and DMI[0] become input pins and their input level is Valid level or floating, either way is fine.
   - DQ[13:8] become output pins to feedback its capturing value via command bus by CS signal.
   - DQS_t[1], DQS_c[1],DMI[1] and DQ[15:14] become output pins or disable, it means that SDRAM may drive to a valid level or left floating.
3. At time tCAENT later, LPDDR4 SDRAM can accept to change its VFREF(ca) Range and Value using input signals of DQS_t[0], DQS_c[0] and DQ[6:0] from existing value that’s setting via MR12 OP[6:0]. The mapping between MR12 OP code and DQs is shown in Table 4.31 At least one V_{REF}CA setting is required before proceed to next training steps.

4.25.1 Command Bus Training for x16 mode (Cont'd)

Table 4.31 — Mapping of MR12 OP Code and DQ Numbers

	Mapping						
MR12 OP Code	OP6	OP5	OP4	OP3	OP2	OP1	OP0
DQ Number	DQ6	DQ5	DQ4	DQ3	DQ2	DQ1	DQ0

4. The new V_{REF}(CA) value must "settle" for time tV_{REF}_LONG before attempting to latch CA information.
5. To verify that the receiver has the correct V_{REF}(CA) setting and to further train the CA eye relative to clock (CK), values latched at the receiver on the CA bus are asynchronously output to the DQ bus.
6. To exit Command Bus Training mode, drive CKE HIGH, and after time tV_{REF}_LONG issue the MRW-1 command followed by the MRW-2 command to set MR13 OP[0]=0B. After time tMRW the LPDDR4-SDRAM is ready for normal operation. After training exit the LPDDR4-SDRAM will automatically switch back to the FSP-OP registers that were in use prior to training.

Command Bus Training may executed from IDLE or Self Refresh states. When executing CBT within the Self Refresh state, the SDRAM must not be a power down state (i.e. CKE must be HIGH prior to training entry). Command Bus Training entry and exit is the same, regardless of the SDRAM state from which CBT is initiated.

4.25.1.1 Training Sequence for single-rank systems

Note that a example shown here is assuming an initial low-frequency, no-terminating operating point, training a high-frequency, terminating operating point. The green text is low-frequency, magenta text is high-frequency. Any operating point may be trained from any known good operating point.

1. Set MR13 OP[6]=1B to enable writing to Frequency Set Point 'y' (FSP-WR[y]) (or FSP-OP[x], See note).
2. Write FSP-WR[y] (or FSP-WR[x]) registers for all channels to set up high-frequency operating parameters.
3. Issue MRW-1 and MRW-2 commands to enter Command Bus Training mode.
4. Drive CKE LOW, and change CK frequency to the high-frequency operating point.
5. Perform Command Bus Training (V_{REF}CA, CS, and CA).
6. Exit training, a change CK frequency to the low-frequency operating point prior to driving CKE HIGH, then issue MRW-1 and MRW-2 commands. When CKE is driven HIGH, the SDRAM will automatically switch back to the FSP-OP registers that were in use prior to training (i.e. trained values are not retained by the SDRAM).
7. Write the trained values to FSP-WR[y] (or FSP-WR[x]) by issuing MRW-1 and MRW-2 commands to the SDRAM and setting all applicable mode register parameters.
8. Issue MRW-1 and MRW-2 commands to switch to FSP-OP[y] (or FSP-OP[x]), to turn on termination, and change CK frequency to the high frequency operating point. At this point the Command Bus is trained and you may proceed to other training or normal operation.

4.25.1.2 Training Sequence for multi-rank systems

Note that the example shown here assumes an initial low-frequency operating point, training a high-frequency operating point. The green text is low-frequency, magenta text is high-frequency. Any operating point may be trained from any known good operating point.

1. Set MR13 OP[6]=1B to enable writing to Frequency Set Point 'y' (FSP-WR[y]) (or FSP-WR[x], See Note).
2. Write FSP-WR[y] (or FSP-WR[x]) registers for all channels and ranks to set up high frequency operating parameters.
3. Read MR0 OP[7] on all channels and ranks to determine which die are terminating, signified by MR0 OP[7]=1B.
4. Issue MRW-1 and MRW-2 commands to enter Command Bus Training mode on the terminating rank.
5. Drive CKE LOW on the terminating rank (or all ranks), and change CK frequency to the high-frequency operating point.
6. Perform Command Bus Training on the terminating rank (V_{REF}CA, CS, and CA).
7. Exit training by driving CKE HIGH, change CK frequency to the low-frequency operating point, and issue MRW-1 and MRW-2 commands to write the trained values to FSP-WR[y] (or FSP-WR[x]). When CKE is driven HIGH, the SDRAM will automatically switch back to the FSP-OP registers that were in use prior to training (i.e. trained values are not retained by the SDRAM).
8. Issue MRW-1 and MRW-2 command to enter training mode on the non-terminating rank (but keep CKE HIGH)
9. Issue MRW-1 and MRW-2 commands to switch the terminating rank to FSP-OP[y] (or FSP-OP[x]), to turn on termination, and change CK frequency to the high frequency operating point.
10. Drive CKE LOW on the non-terminating (or all) ranks. The non-terminating rank(s) will now be using FSP-OP[y] (or FSP-OP[x]).
11. Perform Command Bus Training on the non-terminating rank (V_{REF}CA, CS, and CA).
12. Issue MRW-1 and MRW-2 commands to switch the terminating rank to FSP-OP[x] (or FSP-OP[y]) to turn off termination.
13. Exit training by driving CKE HIGH on the non-terminating rank, change CK frequency to the low-frequency operating point, and issue MRW-1 and MRW-2 commands. When CKE is driven HIGH, the SDRAM will automatically switch back to the FSP-OP registers that were in use prior to training (i.e. trained values are not retained by the SDRAM).
14. Write the trained values to FSP-WR[y] (or FSP-WR[x]) by issuing MRW-1 and MRW-2 commands to the SDRAM and setting all applicable mode register parameters.
15. Issue MRW-1 and MRW-2 commands to switch the terminating rank to FSP-OP[y] (or FSP-OP[x]), to turn on termination, and change CK frequency to the high frequency operating point. At this point the Command Bus is trained for both ranks and you may proceed to other training or normal operation.

4.25.1.3 Relation between CA input pin DQ output pin.

The relation between CA input pin DQ output pin is shown in Table 4.32.

Table 4.32 — Mapping of CA Input pin and DQ Output pin

	Mapping					
CA Number	CA5	CA4	CA3	CA2	CA1	CA0
DQ Number	DQ13	DQ12	DQ11	DQ10	DQ9	DQ8

4.25.1.1 Timing Diagram

The basic Timing diagrams of Command Bus Training are shown in Figure 4.83 through Figure 4.86.

4.25.1.1 Timing Diagram (Cont'd)

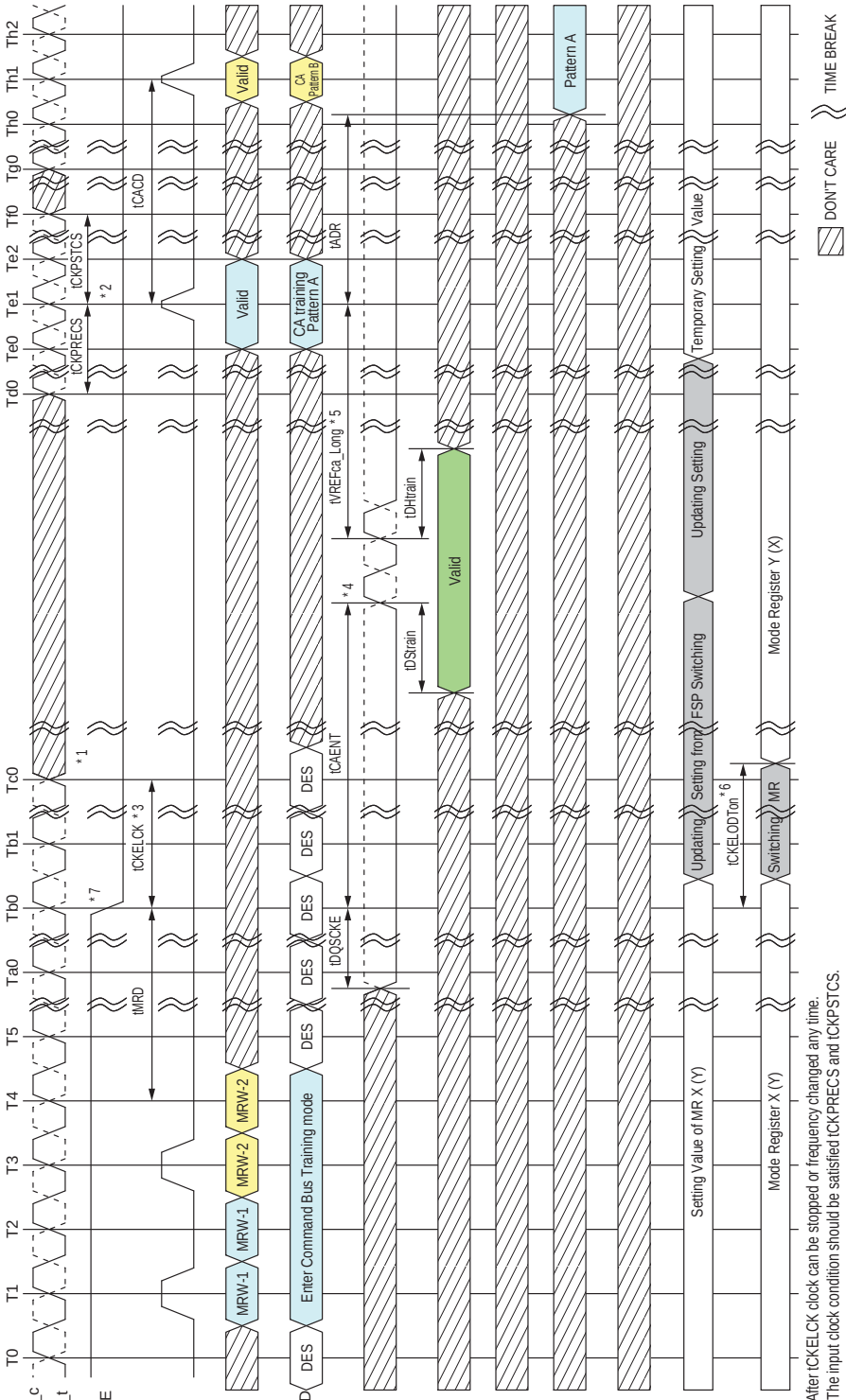

NOTES : 1. After tCKELCK clock can be stopped or frequency changed any time.
2. The input clock condition should be satisfied tCKPRECS and tCKPSTCS.
3. Continue to Drive CK and Hold CS pins low until tCKELCK after CKE is low (which disables command decoding).
4. DRAM may or may not capture first rising/falling edge of DQS_t/c due to an unstable first rising edge. Hence provide at least consecutive 2 pulses of DQS signal input is required in every DQS input signal at capturing DQ6:0 signals. The captured value of DQ6:0 signal level by each DQS edges are overwritten at any time and the DRAM updates its VREFca setting of MR12 temporary after time tVREFca_Long.
5. tVREF_LONG may be reduced to tVREF_SHORT if the following conditions are met: 1) The new Vref setting is a single step above or below the old Vref setting, and 2) The DQS pulses a single time, or the new Vref setting value on DQ[6:0] is static and meets tDSTRAIN/tDHTRAIN for every DQS pulse applied.
6. When CKE is driven LOW, the SDRAM will switch its FSP-OP registers to use the alternate (i.e. non-active) set. Example: If the SDRAM is currently using FSP-OP[0], then it will switch to FSP-OP[1] when CKE is driven LOW. All operating parameters should be written to the alternate mode registers before entering Command Bus Training to ensure that ODT settings, RL/WL/nWR setting, etc. are set to the correct values. If the alternate FSP-OP has ODT_CA disabled then termination will not enable in CA Bus Training mode. If the ODT_CA pad is bonded to Vss, ODT_CA termination will never enable for that die.
7. When CKE is driven low in Command Bus Training mode, the LPDDR4-SDRAM will change operation to the alternate FSP, i.e. the inverse of the FSP programmed in the FSP-OP mode register.

Figure 4.83— Entering Command Bus Training Mode and CA Training Pattern Input and Output with V_{REF}CA Value Update

4.25.1.1 Timing Diagram (Cont'd)

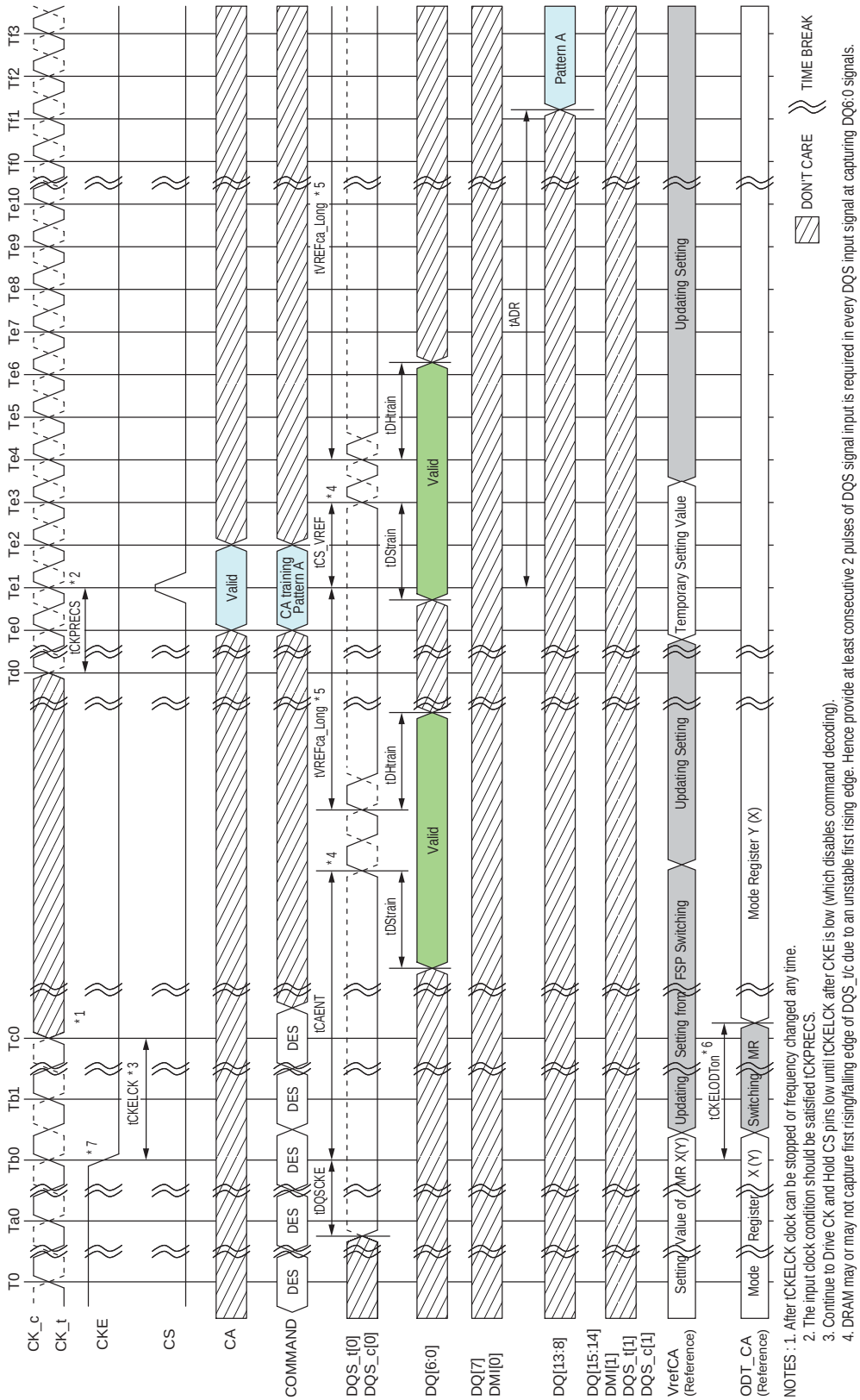

NOTES : 1. After tCKELCK clock can be stopped or frequency changed any time.
2. The input clock condition should be satisfied tCKPRECS.
3. Continue to Drive CK and Hold CS pins low until tCKELCK after CKE is low (which disables command decoding).
4. DRAM may or may not capture first rising/falling edge of DQS_t/c due to an unstable first rising edge. Hence provide at least consecutive 2 pulses of DQS signal input is required in every DQS input signal at capturing DQ6:0 signals. The captured value of DQ6:0 signal level by each DQS edges are overwritten at any time and the DRAM updates its VREFca setting of MR12 temporary after time tVREFca_Long.
5. tVREF_LONG may be reduced to tVREF_SHORT if the following conditions are met: 1) The new Vref setting is a single step above or below the old Vref setting, and 2) The DQS pulses a single time, or the new Vref setting value on DQ[6:0] is static and meets tDSTRAIN/tDHTRAIN for every DQS pulse applied.
6. When CKE is driven LOW, the SDRAM will switch its FSP-OP registers to use the alternate (i.e. non-active) set. Example: If the SDRAM is currently using FSP-OP[0], then it will switch to FSP-OP[1] when CKE is driven LOW. All operating parameters should be written to the alternate mode registers before entering Command Bus Training to ensure that ODT settings, RL/WL/nWR setting, etc., are set to the correct values. If the alternate FSP-OP has ODT_CA disabled then termination will not enable in CA Bus Training mode. If the ODT_CA pad is bonded to Vss, ODT_CA termination will never enable for that die.
7. When CKE is driven low in Command Bus Training mode, the LPDDR4-SDRAM will change operation to the alternate FSP, i.e. the inverse of the FSP programmed in the FSP-OP mode register.

Figure 4.84 — Consecutive V_{REF} CA Value Update

4.25.1.1 Timing Diagram (Cont'd)

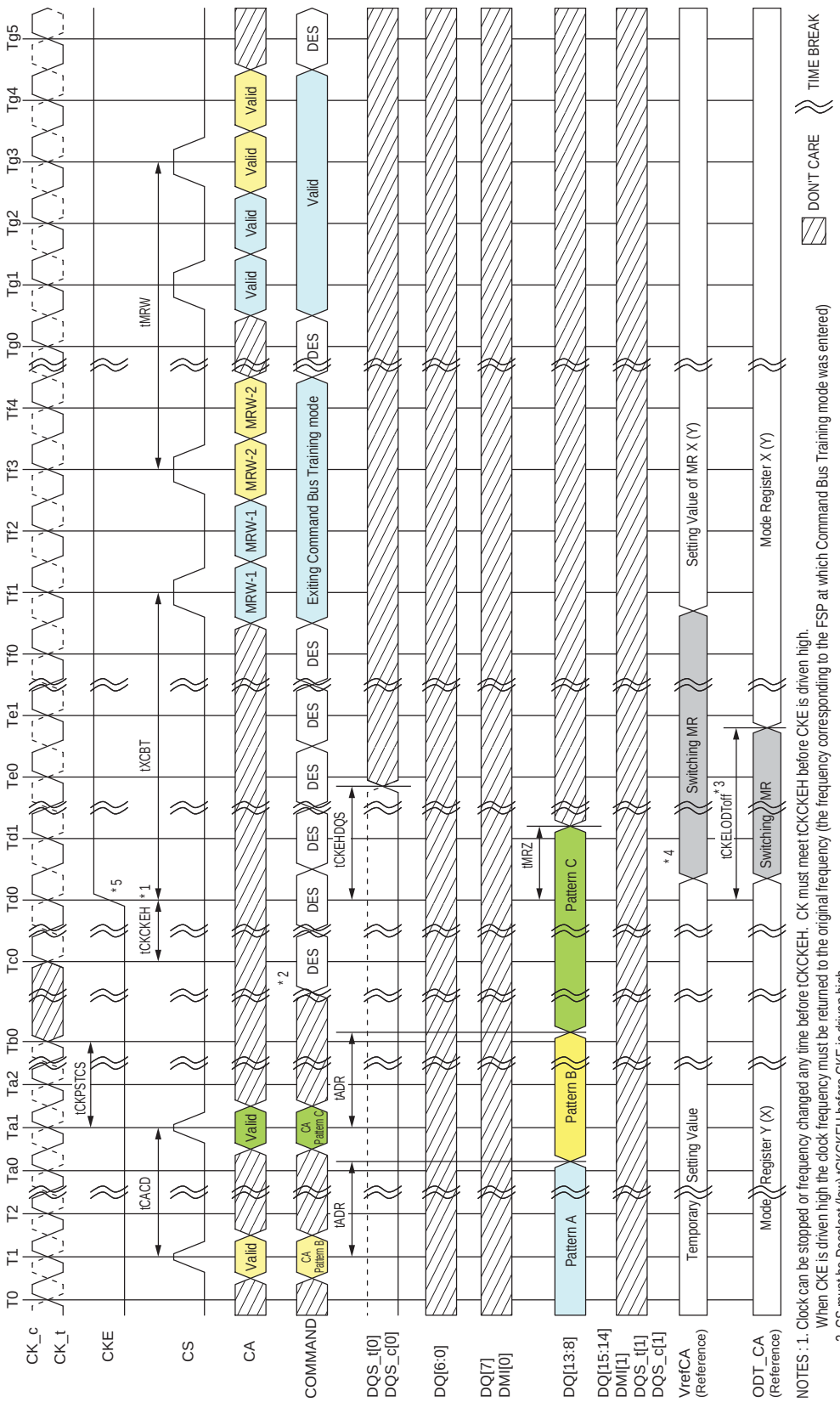

NOTES : 1. Clock can be stopped or frequency changed any time before tCKCKEH. CK must meet tCKCKEH before CKE is driven high.
When CKE is driven high the clock frequency must be returned to the original frequency (the frequency corresponding to the FSP at which Command Bus Training mode was entered)
2. CS must be Deselect (low) tCKCKEH before CKE is driven high.
3. When CKE is driven high, the SDRAM's ODT_CA will revert to the state/value defined by FSP-OP prior to Command Bus Training mode entry, i.e. the original frequency set point (FSP-OP, MR13-OP[7]).
Example: If the SDRAM was using FSP-OP[1] for training, then it will switch to FSP-OP[0] when CKE is driven HIGH.
4. Training values are not retained by the SDRAM, and must be written to the FSP-OP register set before returning to operation at the trained frequency.
Example: VREF(ca) will return to the value programmed in the original set point.
5. When CKE is driven high the LPDDR4-SDRAM will revert to the FSP in operation when Command Bus Training mode was entered.

Figure 4.85 — Exiting Command Bus Training Mode with Valid Command

4.25.1.1 Timing Diagram (Cont'd)

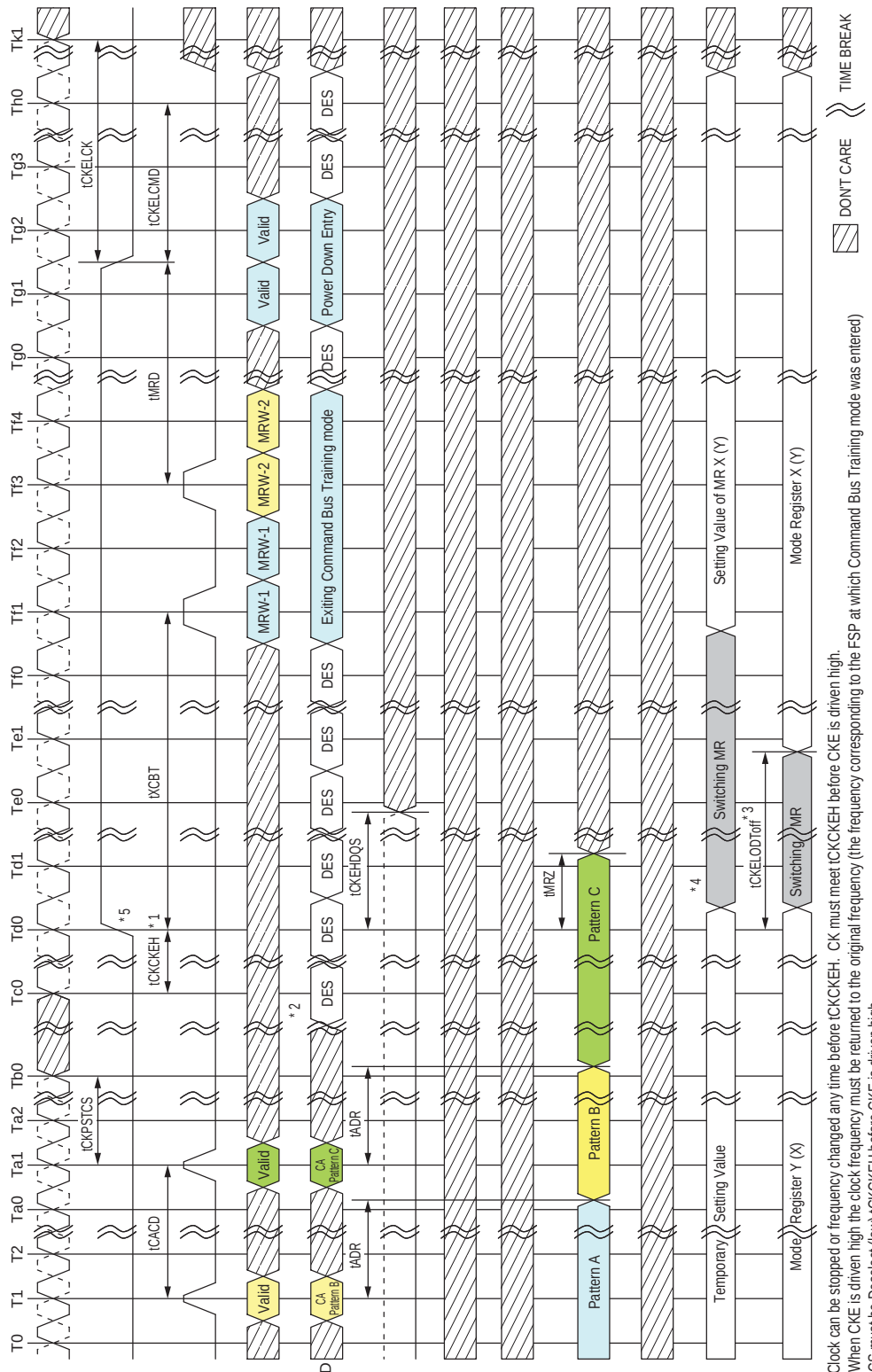

NOTES : 1. Clock can be stopped or frequency changed any time before tCKCKEH. CK must meet tCKCKEH before CKE is driven high.
When CKE is driven high the clock frequency must be returned to the original frequency (the frequency corresponding to the FSP at which Command Bus Training mode was entered)
2. CS must be Deselect (low) tCKCKEH before CKE is driven high.
3. When CKE is driven high, the SDRAM's ODT_CA will revert to the state/value defined by FSP-OP prior to Command Bus Training mode entry, i.e. the original frequency set point (FSP-OP, MR13-OP[7]).
Example: If the SDRAM was using FSP-OP[1] for training, then it will switch to FSP-OP[0] when CKE is driven HIGH.
4. Training values are not retained by the SDRAM, and must be written to the FSP-OP register set before returning to operation at the trained frequency.
Example: VREF(ca) will return to the value programmed in the original set point.
5. When CKE is driven high the LPDDR4-SDRAM will revert to the FSP in operation when Command Bus Training mode was entered.

Figure 4.86 — Exiting Command Bus Training Mode with Power Down Entry

4.25.1.2 Command Bus Training AC Timing Table

Table 4.33 — Command Bus Training AC Timing

Parameter	Symbol	Min/ Max	Data Rate								Unit	Note
			533	1066	1600	2133	2667	3200	3733	4266		
Command Bus Training Timing												
Valid Clock Requirement after CKE Input low	tCKELCK	Min	Max(5ns, 5nCK)								-	
Data Setup for V_{REF} Training Mode	tDStrain	Min	2								ns	
Data Hold for V_{REF} Training Mode	tDHtrain	Min	2								ns	
Asynchronous Data Read	tADR	Max	20								ns	
CA Bus Training Command to CA Bus Training Command Delay	tCACD	Min	RU(tADR/tCK)								tCK	2
Valid Strobe Requirement before CKE Low	tDQSCKE	Min	10								ns	1
First CA Bus Training Command Following CKE Low	tCAENT	Min	250								ns	
V_{REF} Step Time – multiple steps	$tV_{REF}CA_LONG$	Max	250								ns	
V_{REF} Step Time – one step	$tV_{REF}CA_SHORT$	Max	80								ns	
Valid Clock Requirement before CS High	tCKPRECS	Min	2tck + tXP (tXP = max(7.5ns, 5nCK))								-	
Valid Clock Requirement after CS High	tCKPSTCS	Min	max(7.5ns, 5nCK))								-	
Minimum delay from CS to DQS toggle in command bus training	tCS_V_{REF}	Min	2								tCK	
Minimum delay from CKE High to Strobe High Impedance	tCKEHDQS		10								ns	
Valid Clock Requirement before CKE Input High	tCKCKEH	Min	Max(1.75ns, 3nCK)								-	
CA Bus Training CKE High to DQ Tri-state	tMRZ	Min	1.5								ns	
ODT turn-on Latency from CKE	tCKELODTon	Min	20								ns	
ODT turn-off Latency from CKE	tCKELODToff	Min	20								ns	
Command Bus Training Timing												
Exit Command Bus Training Mode to next valid command delay	tXCBT_Short	Min	Max(5nCK, 200ns)								-	3
	tXCBT_Middle	Min	Max(5nCK, 200ns)								-	3
	tXCBT_Long	Min	Max(5nCK, 250ns)								-	3

Table 4.33 — Command Bus Training AC Timing (Cont'd)

Parameter	Symbol	Min/ Max	Data Rate								Unit	Note
			533	1066	1600	2133	2667	3200	3733	4266		

NOTE 1 DQS_t has to retain a low level during tDQSCKE period, as well as DQS_c has to retain a high level.

NOTE 2 If tCACD is violated, the data for samples which violate tCACD will not be available, except for the last sample (where tCACD after this sample is met). Valid data for the last sample will be available after tADR.

NOTE 3 Exit Command Bus Training Mode to next valid command delay Time depends on value of V_{REF}(CA) setting: MR12 OP[5:0] and V_{REF}(CA) Range: MR12 OP[6] of FSP-OP 0 and 1. The details are shown in Table 4.37.

Additionally exit Command Bus Training Mode to next valid command delay Time may affect V_{REF}(DQ) setting. Settling time of V_{REF}(DQ) level is same as V_{REF}(CA) level.

4.26 Frequency Set Point

Frequency Set-Points allow the LPDDR4-SDRAM CA Bus to be switched between two differing operating frequencies, with changes in voltage swings and termination values, without ever being in an un-trained state which could result in a loss of communication to the DRAM. This is accomplished by duplicating all CA Bus mode register parameters, as well as other mode register parameters commonly changed with operating frequency. These duplicated registers form two sets that use the same mode register addresses, with read/write access controlled by MR bit FSP-WR (Frequency Set-Point Write/Read) and the DRAM operating point controlled by another MR bit FSP-OP (Frequency Set-Point Operation). Changing the FSP-WR bit allows MR parameters to be changed for an alternate Frequency Set-Point without affecting the LPDDR4-SDRAM's current operation. Once all necessary parameters have been written to the alternate Set-Point, changing the FSP-OP bit will switch operation to use all of the new parameters simultaneously (within tFC), eliminating the possibility of a loss of communication that could be caused by a partial configuration change.

Parameters which have two physical registers controlled by FSP-WR and FSP-OP include:

Table 4.34 — Mode Register Function with two physical registers

MR#	Operand	Function	Note
MR1	OP[2]	WR-PRE (WR Pre-amble Length)	
	OP[3]	RD-PRE (RD Pre-amble Type)	
	OP[6:4]	nWR (Write-Recovery for Auto-Pre-charge commands)	
	OP[7]	PST (RD Post-Amble Length)	
MR2	OP[2:0]	RL (Read latency)	
	OP[5:3]	WL (Write latency)	
	OP[6]	WLS (Write Latency Set)	
MR3	OP[0]	PU-Cal (Pull-up Calibration Point)	1
	OP[1]	WR PST(WR Post-Amble Length)	
	OP[5:3]	PDDS (Pull-Down Drive Strength)	
	OP[6]	DBI-RD (DBI-Read Enable)	
	OP[7]	DBI-WR (DBI-Write Enable)	
MR11	OP[2:0]	DQ ODT (DQ Bus Receiver On-Die-Termination)	
	OP[6:4]	CA ODT (CA Bus Receiver On-Die-Termination)	
MR12	OP[5:0]	V_{REF}(CA) (V_{REF}(CA) Setting)	
	OP[6]	VR-CA (V_{REF}(CA) Range)	
MR14	OP[5:0]	V_{REF}(DQ) (V_{REF}(DQ) Setting)	
	OP[6]	VR(dq) (V_{REF}(DQ) Range)	
MR22	OP[2:0]	SoC ODT (Controller ODT Value for VOH calibration)	
	OP[3]	ODTE-CK (CK ODT enabled for nonterminating rank)	
	OP[4]	ODTE-CS (CS ODT enable for non terminating rank)	
	OP[5]	ODTD-CA (CA ODT termination disable)	

NOTE 1 PU_CAL setting is required as the same value for both Ch.A and Ch.B before issuing ZQ Cal start command. See Mode Register Definition for more details.

Table 4.35 shows how the two mode registers for each of the parameters above can be modified by setting the appropriate FSP-WR value, and how device operation can be switched between operating points by setting the appropriate FSP-OP value. The FSP-WR and FSP-OP functions operate completely independently.

Table 4.35 — Relation between MR Setting and DRAM Operation

Function	MR# & Operand	Data	Operation	Note
FSP-WR	MR13 OP[6]	0 (Default)	Data write to Mode Register N for FSP-OP[0] by MRW Command	1
		1	Data write to Mode Register N for FSP-OP[1] by MRW Command	
FSP-OP	MR13 OP[7]	0 (Default)	DRAM operates with Mode Register N for FSP-OP[0] setting.	2
		1	DRAM operates with Mode Register N for FSP-OP[1] setting.	

NOTE 1 FSP-WR stands for Frequency Set Point Write/Read.
NOTE 2 FSP-OP stands for Frequency Set Point Operating Point.

4.26.1 Frequency set point update timing

The Frequency set point update timing is shown in Figure 4.87. When changing the frequency set point via MR13 OP[7], the VRCG setting: MR13 OP[3] have to be changed into V_{REF} Fast Response (high current) mode at the same time. After Frequency change time(tFC) is satisfied. VRCG can be changed into Normal Operation mode via MR13 OP[3].

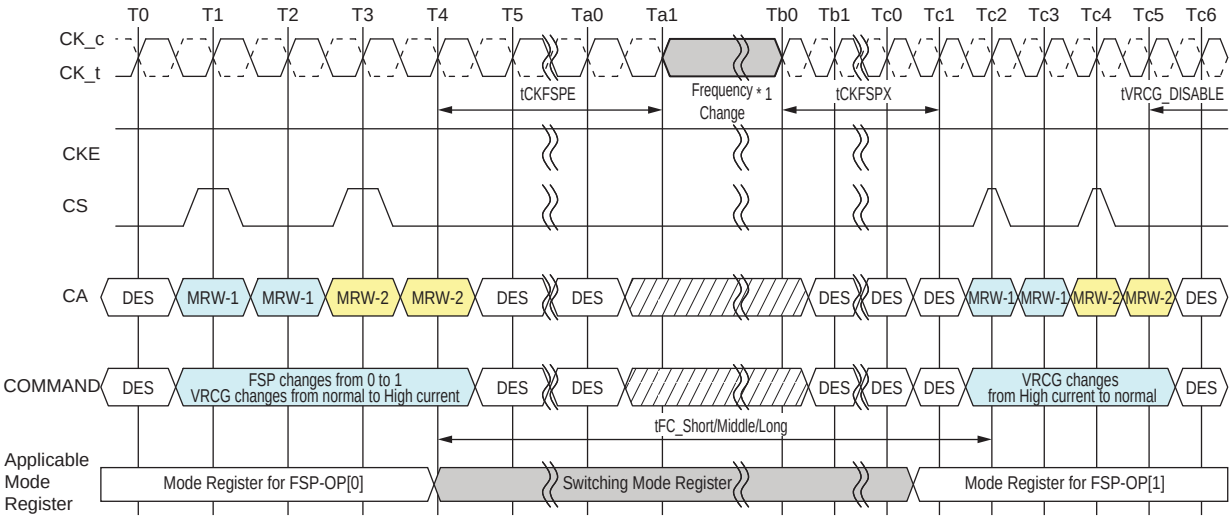

NOTES : 1. The definition that is Clock frequency change during CKE HIGH should be followed at the frequency change operation. For more information, refer to Section 4.42 Input Clock Stop and Frequency Change.

DON'T CARE TIME BREAK

Figure 4.87 — Frequency Set Point Switching Timing

Table 4.36 — AC Timing Table

Parameter	Symbol	Min/ Max	Data Rate								Unit	Note
			533	1066	1600	2133	2667	3200	3733	4266		
Frequency Set Point parameters												
Frequency Set Point Switching Time	tFC_Short	min	200								ns	1
	tFC_Middle	min	200								ns	1
	tFC_Long	min	250								ns	1
Valid Clock Requirement after Entering FSP Change	tCKFSPE	min	max(7.5ns, 4nCK)								-	
Valid Clock Requirement before 1st Valid Command after FSP change	tCKFSPX	min	max(7.5ns, 4nCK)								-	

NOTE 1 Frequency Set Point Switching Time depends on value of V_{REF}(CA) setting: MR12 OP[5:0] and V_{REF}(CA) Range: MR12 OP[6] of FSP-OP 0 and 1. The details are shown in Table 4.37.

Additionally change of Frequency Set Point may affect V_{REF}(DQ) setting. Settling time of V_{REF}(DQ) level is same as V_{REF}(CA) level.

Table 4.37 — tFC value mapping

Application	Step Size		Range	
	From FSP -OP0	To FSP-OP1	From FSP -OP0	To FSP-OP1
tFC_Short	Base	A single step size increment/decrement	Base	No Change
tFC_Middle	Base	Two or more step size increment/decrement	Base	No Change
tFC_Long	-	-	Base	Change

Note.
1. As well as change from FSP-OP1 to FSP-OP0.

Table 4.38 provides an example of tFC value mapping when FSP-OP moves from OP0 to OP1.

Table 4.38 — tFC value mapping example

Case	From/To	FSP-OP: MR13 OP[7]	V_{REF}(CA) Setting: MR12: OP[5:0]	V_{REF}(CA) Range: MR12 OP[6]	Application	Note
1	From	0	001100	0	tFC_Short	1
	To	1	001101	0		
2	From	0	001100	0	tFC_Middle	2
	To	1	001110	0		
3	From	0	Don't Care	0	tFC_Long	3
	To	1	Don't Care	1		

Note.
1. A single step size increment/decrement for V_{REF}(CA) Setting Value.
2. Two or more step size increment/decrement for V_{REF}(CA) Setting Value.
3. V_{REF}(CA) Range is changed. In tis case changing V_{REF}(CA) Setting doesn't affect tFC value.

The LPDDR4-SDRAM defaults to FSP-OP[0] at power-up. Both Set-Points default to settings needed to operate in un-terminated, low-frequency environments. To enable the LPDDR4-SDRAM to operate at higher frequencies, Command Bus Training mode should be utilized to train the alternate Frequency Set-Point (Figure 4.88). See the section Command Bus Training for more details on this training mode.

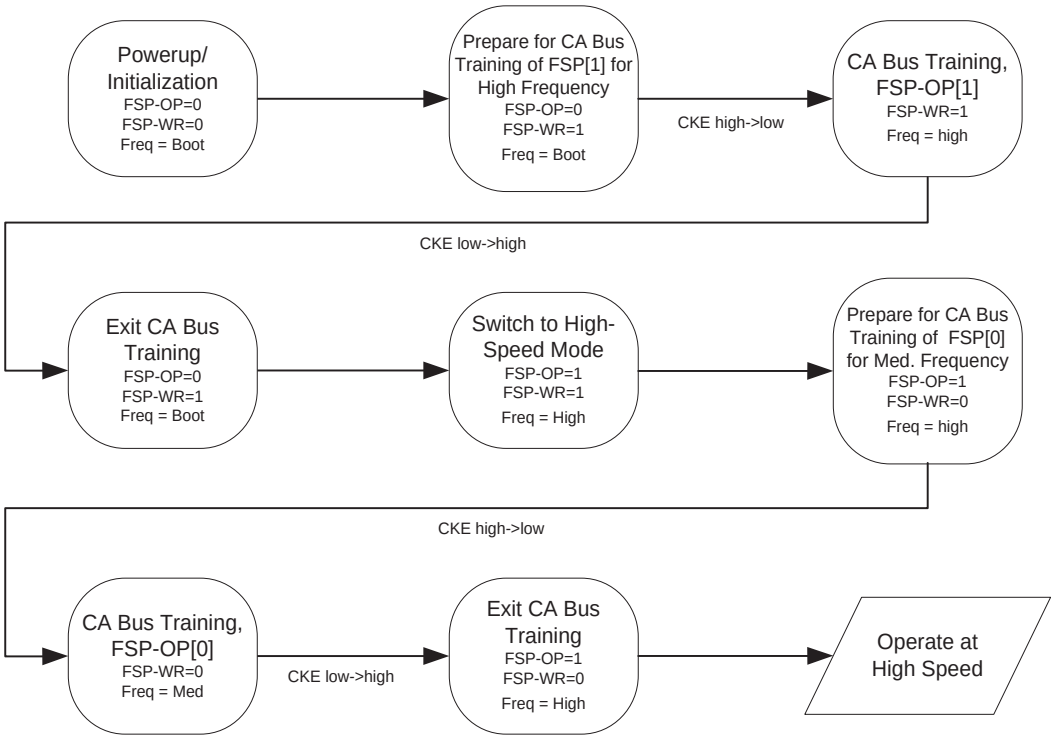

Figure 4.88 — Training Two Frequency Set-Points

Once both Frequency Set-Points have been trained, switching between points can be performed by a single MRW followed by waiting for tFC (Figure 4.89).

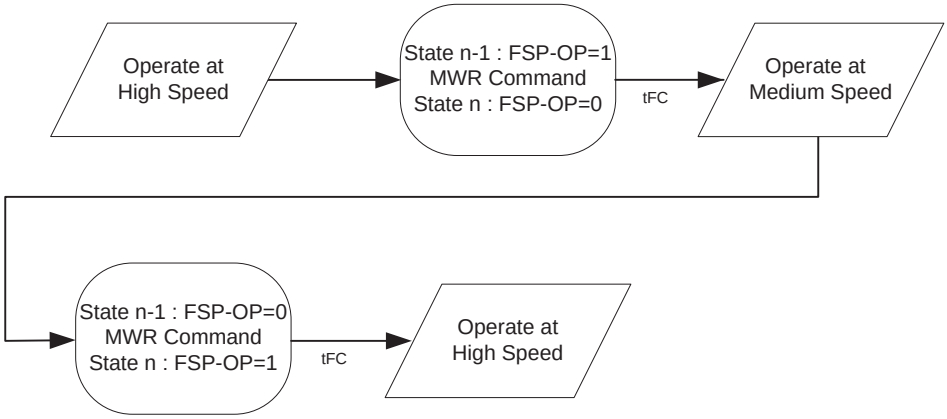

Figure 4.89 — Switching Between Two Trained Frequency Set-Points

Switching to a third (or more) Set-Point can be accomplished if the memory controller has stored the previously-trained values (in particular the Vref-CA calibration value) and re-writes these to the alternate Set-Point before switching FSP-OP (Figure 4.90).

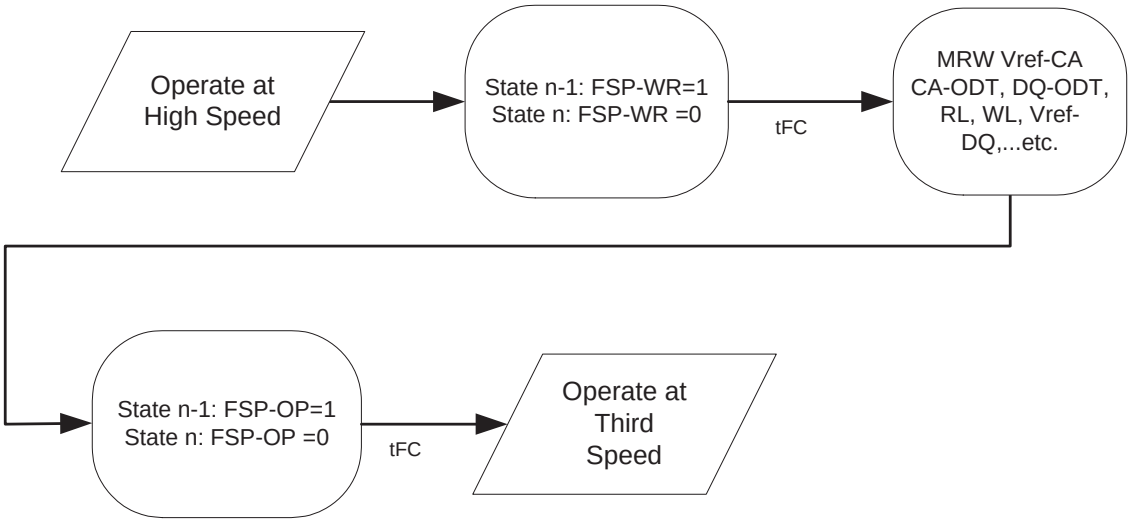

Figure 4.90 — Switching to a Third Trained Frequency Set-Point

4.27 Mode Register Write-WR Leveling Mode

To improve signal-integrity performance, the LPDDR4 SDRAM provides a write-leveling feature to compensate CK-to-DQS timing skew affecting timing parameters such as tDQSS, tDSS, and tDSH. The DRAM samples the clock state with the rising edge of DQS signals, and asynchronously feeds back to the memory controller. The memory controller references this feedback to adjust the clock-to-data strobe signal relationship for each DQS_t/DQS_c signal pair.

All data bits (DQ[7:0] for DQS_t/DQS_c[0], and DQ[15:8] for DQS_t/DQS_c[1]) carry the training feedback to the controller. Both DQS signals in each channel must be leveled independently. Write-leveling entry/exit is independent between channels.

The LPDDR4 SDRAM enters into write-leveling mode when mode register MR2-OP[7] is set HIGH. When entering write-leveling mode, the state of the DQ pins is undefined. During write-leveling mode, only DESELECT commands are allowed, or a MRW command to exit the write-leveling operation. Depending on the absolute values of tDQSL and tDQSH in the application, the value of tDQSS may have to be better than the limits provided in Table 4.29 in order to satisfy the tDSS and tDSH specifications. Upon completion of the write-leveling operation, the DRAM exits from write-leveling mode when MR2-OP[7] is reset LOW.

Write Leveling should be performed before Write Training (DQS2DQ Training).

4.27.1 Write Leveling Procedure

1. Enter into Write-leveling mode by setting MR2-OP[7]=1.
2. Once entered into Write-leveling mode, DQS_t must be driven LOW and DQS_c HIGH after a delay of tWLDQSEN.
3. Wait for a time tWLMRD before providing the first DQS signal input. The delay time tWLMRD(MAX) is controllerdependent.
4. DRAM may or may not capture first rising edge of DQS_t due to an unstable first risign edge. Hence provide at least consecutive 2 pulses of DQS signal input is required in every DQS input signal during Write Training Mode.
   The captured clock level by each DQS edges are overwritten at any time and the DRAM provides asynchronous feedback on all the DQ bits after time tWLO.
5. The feedback provided by the DRAM is referenced by the controller to increment or decrement the DQS_t and/or DQS_c delay settings.
6. Repeat step 4 through step 5 until the proper DQS_t/DQS_c delay is established.
7. Exit from Write-leveling mode by setting MR2-OP[7]=0.

A Write Leveling timing examples are shown in Figure 4.91 and Figure 4.92.

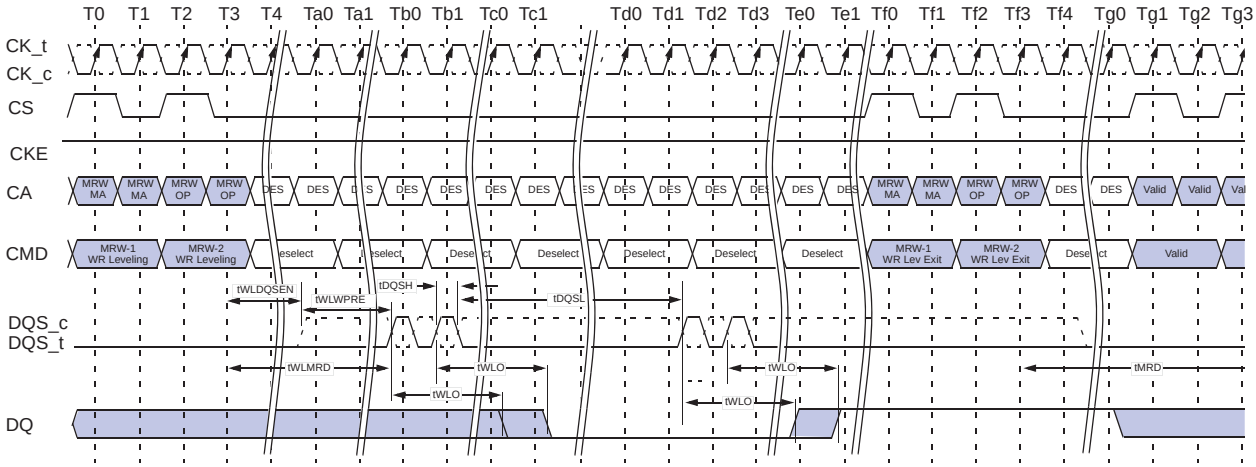

Figure 4.91 — Write Leveling Timing, tDQSL(max)

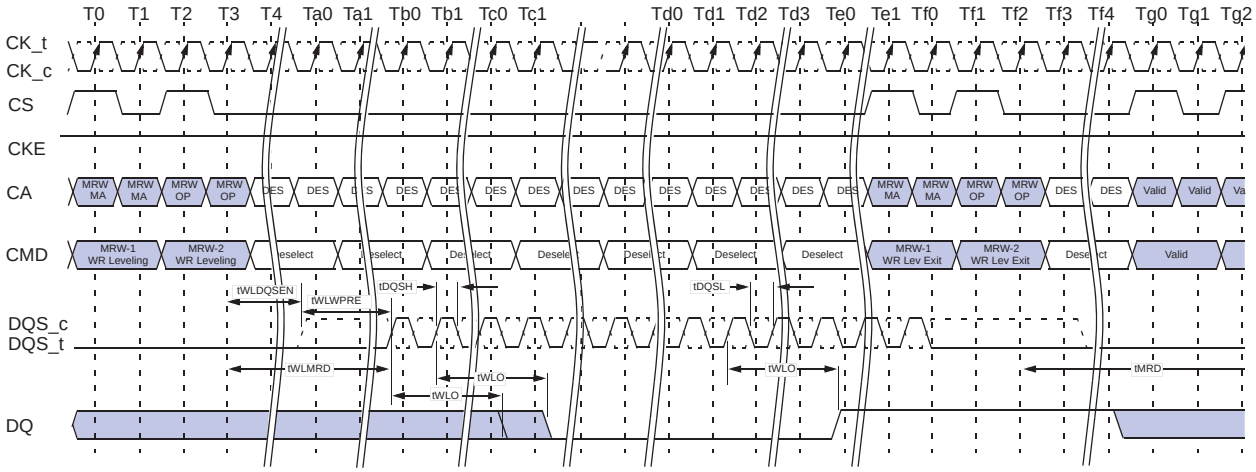

Figure 4.92 — Write Leveling Timing, tDQSL(min)

4.27.2 Input Clock Frequency Stop and Change

The input clock frequency can be stopped or changed from one stable clock rate to another stable clock rate during Write Leveling mode. The Frequency stop or change timing is shown in Figure 4.93.

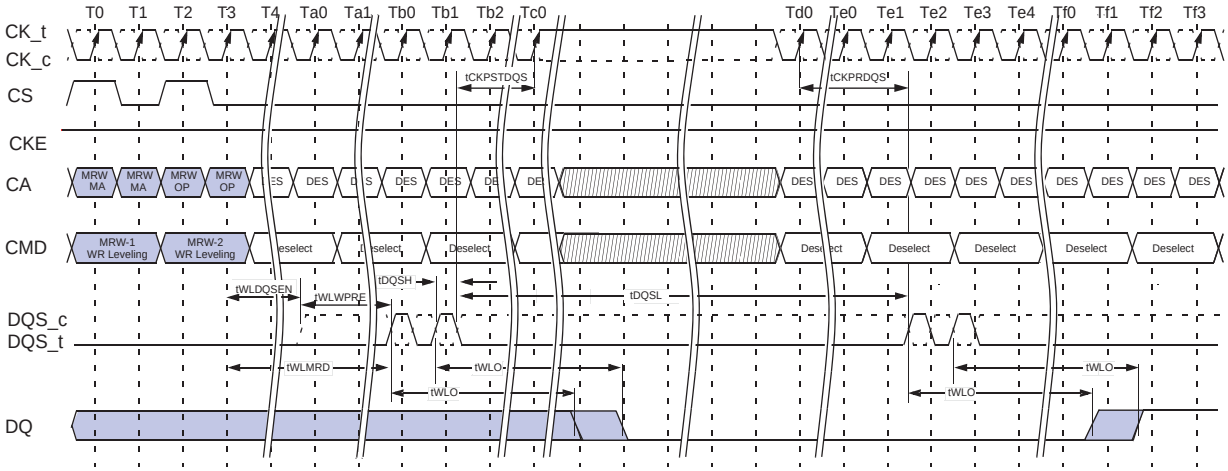

NOTES : 1. CK_t is held LOW and CK_c is held HIGH during clock stop.
2. CS shall be held LOW during clock clock stop

Figure 4.93 — Clock Stop and Timing during Write

Leveling Table 4.39 — Write Leveling Timing Parameters

Parameter	Symbol	Min/Max	Value	Units	Notes
DQS_t/DQS_c delay after write leveling mode is programmed	tWLDQSEN	Min	20	tCK	
		Max	-		
Write preamble for Write Leveling	tWLWPRE	Min	20	tCK	
		Max	-		
First DQS_t/DQS_c edge after write leveling mode is programmed	tWLMRD	Min	40	tCK	
		Max	-		
Write leveling output delay	tWLO	Min	0	ns	
		Max	20		
Mode register set command delay	tMRD	Min	max(14ns, 10nCK)	ns	
		Max	-		
Valid Clock Requirement before DQS Toggle	tCKPRDQS	Min	max(7.5ns, 4nCK)	-	
		Max	-		
Valid Clock Requirement after DQS Toggle	tCKPSTDQS	Min	max(7.5ns, 4nCK)	-	
		Max	-		

4.27.3 Write Leveling Setup and Hold Time

Table 4.40 — Write Leveling Setup and Hold Time

Parameter	Symbol	Min/Max	Data Rate					Unit
			1600	2400	3200	3733	4266	
Write Leveling Parameters								
Write leveling hold time	tWLH	MIN	150	100	75	62.5	50	ps
Write leveling setup time	tWLS	MIN	150	100	75	62.5	50	ps
Write leveling input valid window	tWLIVW	MIN	240	160	120	105	90	ps

Notes:

1. In addition to the traditional setup and hold time specifications above, there is value in a input valid window based specification for write-leveling training. As the training is based on each device, worst case process skews for setup and hold do not make sense to close timing between CK and DQS.
2. tWLIVW is defined in a similar manner to tdIVW_Total, except that here it is a DQS input valid window with respect to CK. This would need to account for all VT (voltage and temperature) drift terms between CK and DQS within the DRAM that affect the write-leveling input valid window.

The DQS input mask for timing with respect to CK is shown in figure 4.94. The "total" mask (tWLIVW) defines the time the input signal must not encroach in order for the DQS input to be successfully captured by CK with a BER of lower than tbd. The mask is a receiver property and it is not the valid data-eye.

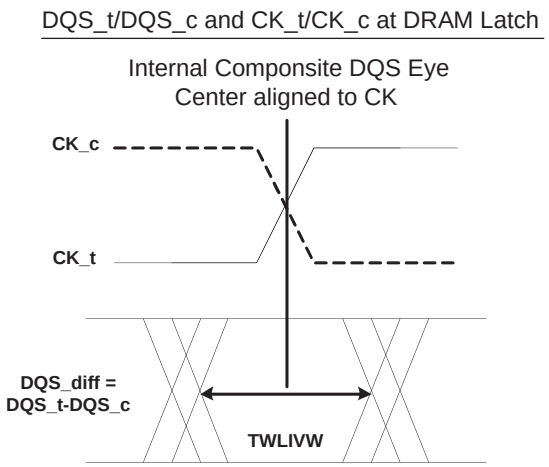

Figure 4.94 — DQS_t/DQS_c to CK_t/CK_c timings at the DRAM pins referenced from the internal latch

4.28 RD DQ Calibration for x16 mode

LPDDR4 devices feature a RD DQ Calibration training function that outputs a 16-bit user-defined pattern on the DQ pins. RD DQ Calibration is initiated by issuing a MPC-1 [RD DQ Calibration] command followed by a CAS-2 command, cause the LPDDR4-SDRAM to drive the contents of MR32 followed by the contents of MR40 on each of DQ[15:0] and DMI[1:0]. The pattern can be inverted on selected DQ pins according to user-defined invert masks written to MR15 and MR20.

4.28.1 RD DQ Calibration Training Procedure

The procedure for executing RD DQ Calibration is:

- Issue MRW commands to write MR32 (first eight bits), MR40 (second eight bits), MR15 (eight-bit invert mask for byte 0), and MR20 (eight-bit invert mask for byte 1).
  - Optionally this step could be skipped to use the default patterns
    - MR32 default = 5Ah
    - MR40 default = 3Ch
    - MR15 default = 55h
    - MR20 default = 55h
- Issue an MPC-1 [RD DQ Calibration] command followed immediately by a CAS-2 command.
  - Each time an MPC-1 [RD DQ Calibration] command followed by a CAS-2 is received by the LPDDR4 SDRAM, a 16-bit data burst will, after the currently set RL, drive the eight bits programmed in MR32 followed by the eight bits programmed in MR40 on all I/O pins.
  - The data pattern will be inverted for I/O pins with a '1' programmed in the corresponding invert mask mode register bit (see Table 4.41).
  - Note that the pattern is driven on the DMI pins, but no data bus inversion function is enabled, even if Read DBI is enabled in the DRAM mode register.
  - The MPC-1 [RD DQ Calibration] command can be issued every tCCD seamlessly, and tRTRRD delay is required between Array Read command and the MPC-1 [RD DQ Calibration] command as well the delay required between the MPC-1 [RD DQ Calibration] command and an array read.
  - The operands received with the CAS-2 command must be driven LOW.
- DQ Read Training can be performed with any or no banks active, during Refresh, or during SREF with CKE high.

Table 4.41 — Invert Mask Assignments

DQ Pin	0	1	2	3	DMI0	4	5	6	7
MR15 bit	0	1	2	3	N/A	4	5	6	7

DQ Pin	8	9	10	11	DMI1	12	13	14	15
MR20 bit	0	1	2	3	N/A	4	5	6	7

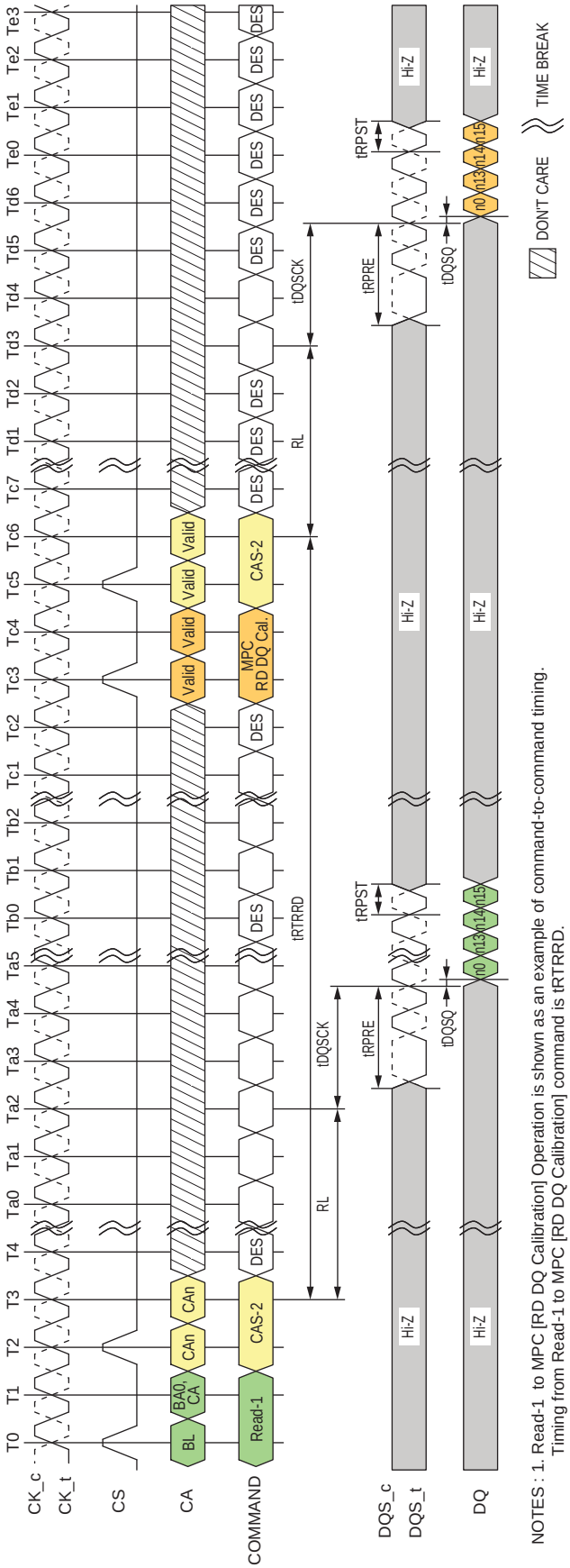

NOTES : 1. Read-1 to MPC [RD DQ Calibration] Operation is shown as an example of command-to-command timing.
Timing from Read-1 to MPC [RD DQ Calibration] command is tRTRRD.
2. MPC [RD DQ Calibration] uses the same command-to-data timing relationship (RL, tDQSCK, tDQSQ) as a Read-1 command.
3. BL = 16, Read Preamble: Toggle, Read Postamble: 0.5nCK.
4. DES commands are shown for ease of illustration; other commands may be valid at these times.

Figure 4.95 — DQ Read Training Timing: Read to Read DQ Calibration

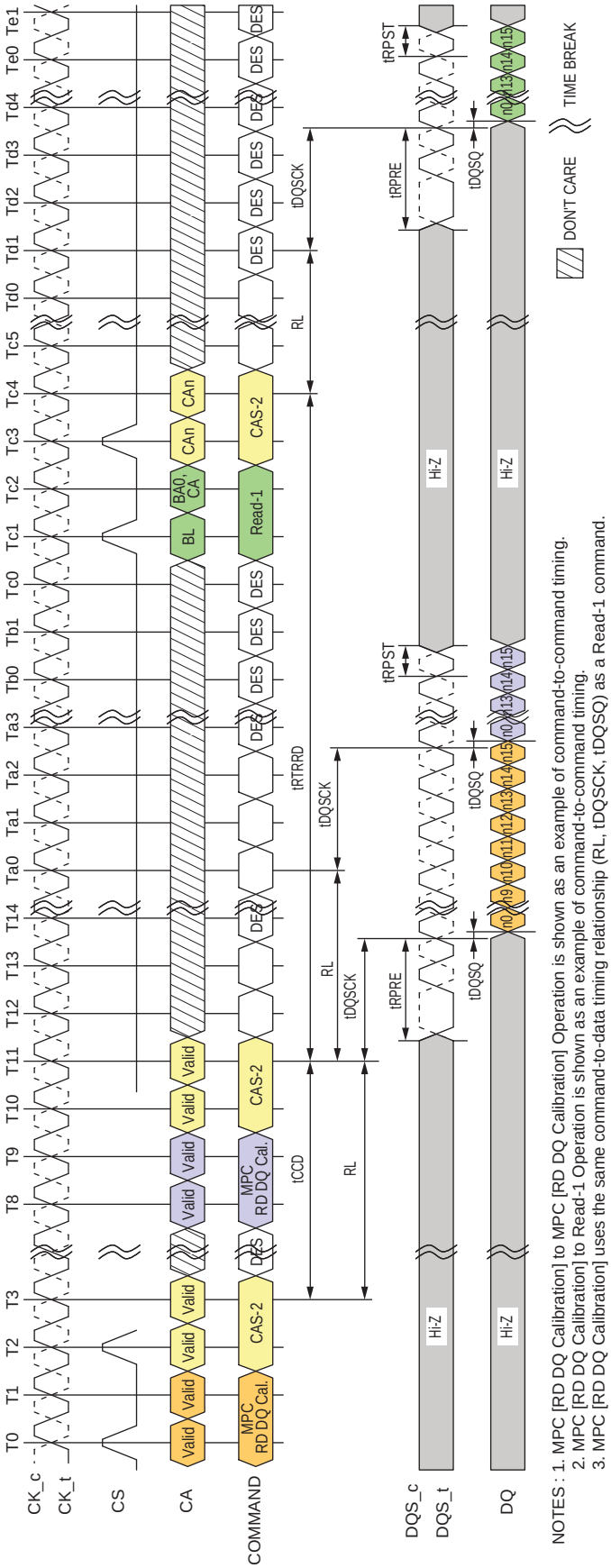

NOTES : 1. MPC [RD DQ Calibration] to MPC [RD DQ Calibration] Operation is shown as an example of command-to-command timing.
2. MPC [RD DQ Calibration] to Read-1 Operation is shown as an example of command-to-command timing.
3. MPC [RD DQ Calibration] uses the same command-to-data timing relationship (RL, tDQSCK, tDQSQ) as a Read-1 command.
4. Seamless MPC [RD DQ Calibration] commands may be executed by repeating the command every tCCD time.
5. Timing from MPC [RD DQ Calibration] command to Read-1 is tRTRRD.
6. BL = 16, Read Preamble: Toggle, Read Postamble: 0.5nCK.
7. DES commands are shown for ease of illustration; other commands may be valid at these times.

Figure 4.96 — DQ Read Training Timing: Read DQ Cal. to Read DQ Cal. / Read

4.28.2 DQ Read Training Example

An example of DQ Read Training output is shown in Table 4.42. This shows the 16-bit data pattern that will be driven on each DQ in byte 0 when one DQ Read Training command is executed. This output assumes the following mode register values are used:

- MR32 = 1CH
- MR40 = 59H
- MR15 = 55H
- MR20 = 55H

Table 4.42 — DQ Read Calibration Bit Ordering and Inversion Example

Pin		Bit Sequence →															
	Invert	15	14	13	12	11	10	9	8	7	6	5	4	3	2	1	0
DQ0	Yes	1	0	1	0	0	1	1	0	1	1	1	0	0	0	1	1
DQ1	No	0	1	0	1	1	0	0	1	0	0	0	1	1	1	0	0
DQ2	Yes	1	0	1	0	0	1	1	0	1	1	1	0	0	0	1	1
DQ3	No	0	1	0	1	1	0	0	1	0	0	0	1	1	1	0	0
DMI0	Never	0	1	0	1	1	0	0	1	0	0	0	1	1	1	0	0
DQ4	Yes	1	0	1	0	0	1	1	0	1	1	1	0	0	0	1	1
DQ5	No	0	1	0	1	1	0	0	1	0	0	0	1	1	1	0	0
DQ6	Yes	1	0	1	0	0	1	1	0	1	1	1	0	0	0	1	1
DQ7	No	0	1	0	1	1	0	0	1	0	0	0	1	1	1	0	0
DQ8	Yes	1	0	1	0	0	1	1	0	1	1	1	0	0	0	1	1
DQ9	No	0	1	0	1	1	0	0	1	0	0	0	1	1	1	0	0
DQ10	Yes	1	0	1	0	0	1	1	0	1	1	1	0	0	0	1	1
DQ11	No	0	1	0	1	1	0	0	1	0	0	0	1	1	1	0	0
DMI1	Never	0	1	0	1	1	0	0	1	0	0	0	1	1	1	0	0
DQ12	Yes	1	0	1	0	0	1	1	0	1	1	1	0	0	0	1	1
DQ13	No	0	1	0	1	1	0	0	1	0	0	0	1	1	1	0	0
DQ14	Yes	1	0	1	0	0	1	1	0	1	1	1	0	0	0	1	1
DQ15	No	0	1	0	1	1	0	0	1	0	0	0	1	1	1	0	0

NOTE 1 The patterns contained in MR32 and MR40 are transmitted on DQ[15:0] and DMI[1:0] when RD DQ Calibration is initiated via a MPC-1 [RD DQ Calibration] command. The pattern transmitted serially on each data lane, organized "little endian" such that the low-order bit in a byte is transmitted first. If the data pattern is 27H, then the first bit transmitted with be a '1', followed by '1', '1', '0', '0', '1', '0', and '0'. The bit stream will be 00100111 →.

NOTE 2 MR15 and MR20 may be used to invert the MR32/MR40 data pattern on the DQ pins. See MR15 and MR20 for more information. Data is never inverted on the DMI[1:0] pins.

NOTE 3 DMI [1:0] outputs status follows Table 4.43.

NOTE 4 No Data Bus Inversion (DBI) function is enacted during RD DQ Calibration, even if DBI is enabled in MR3-OP[6].

Table 4.43 — MR Setting vs. DMI Status

DM Function MR13 OP[5]	Write DBIdc Function MR3 OP[7]	Read DBIdc Function MR3 OP[6]	DMI Status
1: Disable	0: Disable	0: Disable	Hi-Z
1: Disable	1: Enable	0: Disable	The data pattern is transmitted
1: Disable	0: Disable	1: Enable	The data pattern is transmitted
1: Disable	1: Enable	1: Enable	The data pattern is transmitted
0: Enable	0: Disable	0: Disable	The data pattern is transmitted
0: Enable	1: Enable	0: Disable	The data pattern is transmitted
0: Enable	0: Disable	1: Enable	The data pattern is transmitted
0: Enable	1: Enable	1: Enable	The data pattern is transmitted

4.28.3 MPC of Read DQ Calibration after Power-Down Exit

Following the power-down state, an additional time, tMRRI, is required prior to issuing the MPC of Read DQ Calibration command. This additional time (equivalent to tRCD) is required in order to be able to maximize power-down current savings by allowing more power-up time for the Read DQ data in MR32 and MR40 data path after exit from standby, power-down mode.

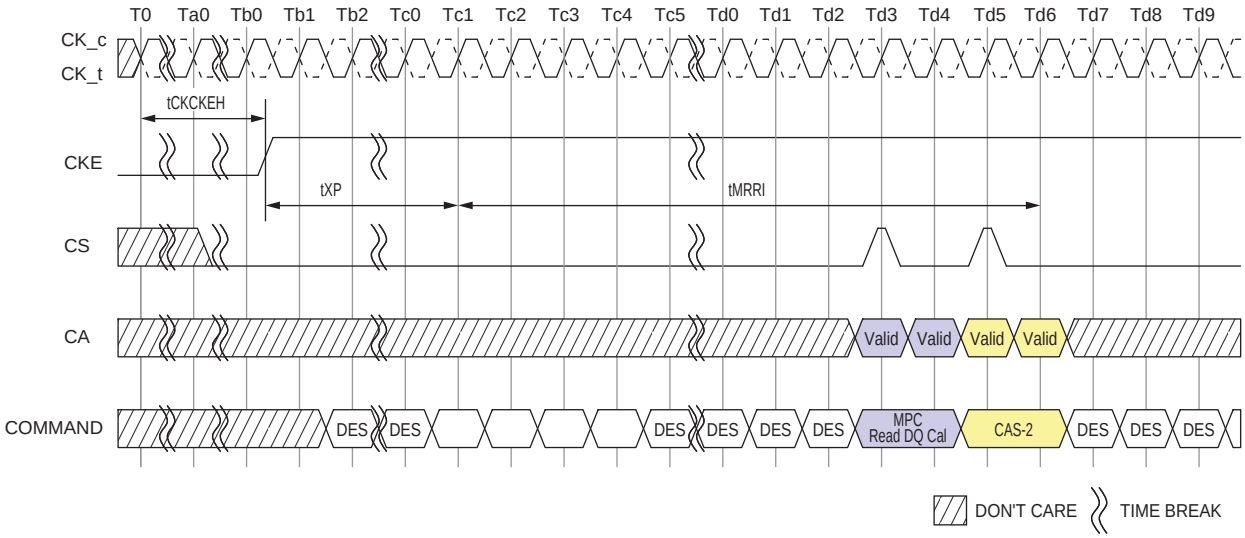

Figure 4.97 — MPC Read DQ Calibration Following Power-Down State

4.29 DQS-DQ Training

The LPDDR4-SDRAM uses an un-matched DQS-DQ path to enable high speed performance and save power in the DRAM. As a result, the DQS strobe must be trained to arrive at the DQ latch center-aligned with the Data eye. The SDRAM DQ receiver is located at the DQ pad, and has a shorter internal delay in the SDRAM than does the DQS signal. The SDRAM DQ receiver will latch the data present on the DQ bus when DQS reaches the latch, and training is accomplished by delaying the DQ signals relative to DQS such that the Data eye arrives at the receiver latch centered on the DQS transition.

Two modes of training are available in LPDDR4:

- Command-based FIFO WR/RD with user patterns
- A internal DQS clock-tree oscillator, to determine the need for, and the magnitude of required training.

The command-based FIFO WR/RD uses the MPC command with operands to enable this special mode of operation. When issuing the MPC command, if OP6 is set LOW then the DRAM will perform a NOP command. When OP6 is set HIGH, then OP5:0 enable training functions or are reserved for future use (RFU). MPC commands that initiate a Read FIFO, READ DQ Calibration or Write FIFO to the SDRAM must be followed immediately by a CAS-2 command. See 4.32, "Multi Purpose Command (MPC) Definition" for more information.

To perform Write Training, the controller can issue a MPC [Write DQ FIFO] command with OP[6:0] set as described in the MPC Definition section, followed immediately by a CAS-2 command (CAS-2 operands should be driven LOW) to initiate a Write DQ FIFO. Timings for MPC [Write DQ FIFO] are identical to a Write command, with WL (Write Latency) timed from the 2nd rising clock edge of the CAS-2 command. Up to 5 consecutive MPC [Write DQ FIFO] commands with user defined patterns may be issued to the SDRAM to store up to 80 values (BL16 x5) per pin that can be read back via the MPC [Read DQ FIFO] command. Write/Read FIFO Pointer operation is described later in this section.

After writing data to the SDRAM with the MPC [Write DQ FIFO] command, the data can be read back with the MPC [Read DQ FIFO] command and results compared with “expect” data to see if further training (DQ delay) is needed. MPC [Read DQ FIFO] is initiated by issuing a MPC command with OP[6:0] set as described in the MPC Definition section, followed immediately by a CAS-2 command (CAS-2 operands must be driven LOW). Timings for the MPC [Read DQ FIFO] command are identical to a Read command, with RL (Read Latency) timed from the 2nd rising clock edge of the CAS-2 command.

Read DQ FIFO is non-destructive to the data captured in the FIFO, so data may be read continuously until it is either overwritten by a Write DQ FIFO command or disturbed by CKE LOW or any of the following commands; Write, Masked Write, Read, Read DQ Calibration and a MRR. If fewer than 5 Write DQ FIFO commands were executed, then unwritten registers will have un-defined (but valid) data when read back.

The following command about MRW is only allowed from MPC [Write DQ FIFO] command to MPC [Read DQ FIFO].

Allowing MRW command is for OP[7]:FSP-OP, OP[6]:FSP-WR and OP[3]:VRCG of MR13 and MR14. And the rest of MRW command is prohibited.

For example: If 5 Write DQ FIFO commands are executed sequentially, then a series of Read DQ FIFO commands will read valid data from FIFO[0], FIFO[1]….FIFO[4], and will then wrap back to FIFO[0] on the next Read DQ FIFO.

On the other hand, if fewer than 5 Write DQ FIFO commands are executed sequentially (example=3), then a series of Read DQ FIFO commands will return valid data for FIFO[0], FIFO[1], and FIFO[2], but the next two Read DQ FIFO commands will return un-defined data for FIFO[3] and FIFO[4] before wrapping back to the valid data in FIFO[0].

4.29.1 FIFO Pointer Reset and Synchronism

The Read and Write DQ FIFO pointers are reset under the following conditions:

- Power-up initialization
- RESET_n asserted
- Power-down entry
- Self Refresh Power-Down entry

The MPC [Write DQ FIFO] command advances the WR-FIFO pointer, and the MPC [Read DQ FIFO] advances the RD-FIFO pointer. Also any normal (non-FIFO) Read Operation (RD, RDA) advances both WR-FIFO pointer and RD-FIFO pointer. Issuing (non-FIFO) Read Operation command is inhibited during Write training period. To keep the pointers aligned, the SoC memory controller must adhere to the following restriction at the end of Write training period:

- $b = a + (n \times c)$

Where:

‘a’ is the number of MPC [Write DQ FIFO] commands
‘b’ is the number of MPC [Read DQ FIFO] commands
‘c’ is the FIFO depth (=5 for LPDDR4)
‘n’ is a positive integer, ≥ 0

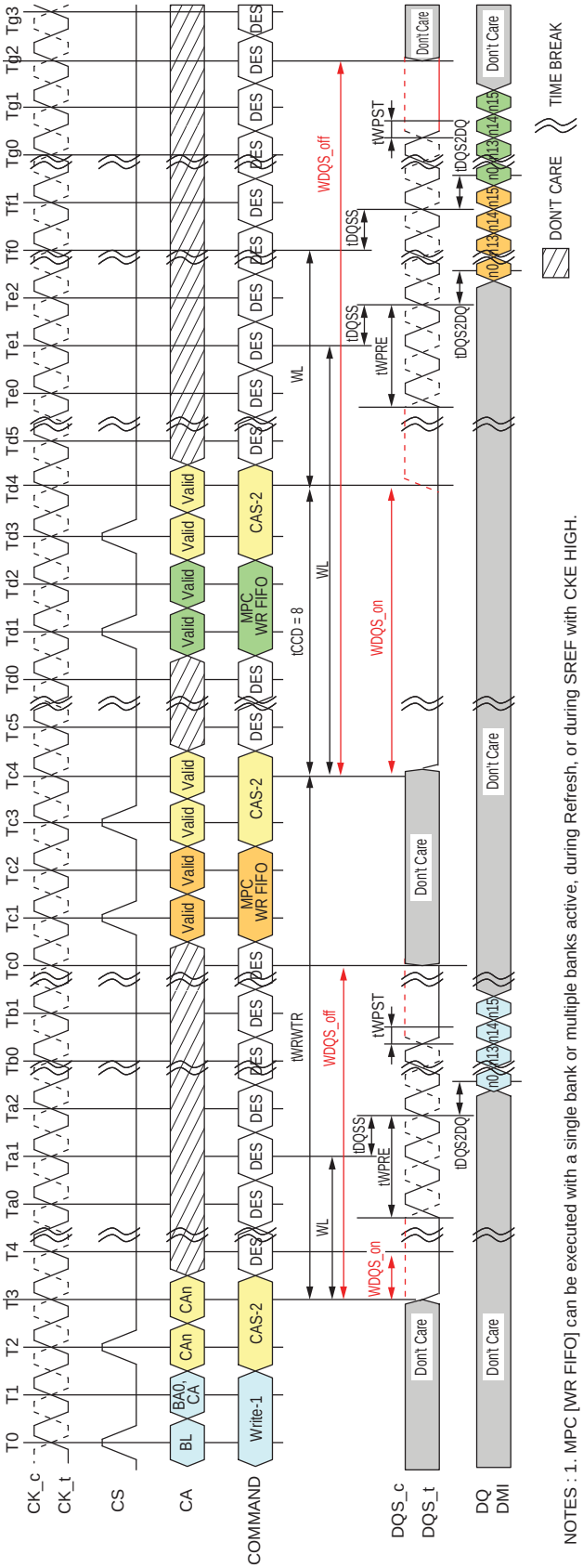

NOTES : 1. MPC [WR FIFO] can be executed with a single bank or multiple banks active, during Refresh, or during SREF with CKE HIGH.
2. Write-1 to MPC is shown as an example of command-to-command timing for MPC. Timing from Write-1 to MPC [WR-FIFO] is tWRWTR.
3. Seamless MPC [WR-FIFO] commands may be executed by repeating the command every tCCD time.
4. MPC [WR-FIFO] uses the same command-to-data timing relationship (WL, tDQSS, tDQS2DQ) as a Write-1 command.
5. A maximum of 5 MPC [WR-FIFO] commands may be executed consecutively without corrupting FIFO data.
The 6th MPC [WR-FIFO] command will overwrite the FIFO data from the first command. If fewer than 5 MPC [WR-FIFO] commands are executed, then the remaining FIFO locations will contain undefined data.
6. For the CAS-2 command following a MPC command, the CAS-2 operands must be driven "LOW."
7. To avoid corrupting the FIFO contents, MPC [RD-FIFO] must immediately follow MPC [WR-FIFO]/CAS-2 without any other command disturbing FIFO pointers in-between. FIFO pointers are disturbed by CKE Low, Write, Masked Write, Read, Read DQ Calibration and MRR.
8. BL = 16, Write Postamble = 0.5nCK
9. DES commands are shown for ease of illustration; other commands may be valid at these times.

Figure 4.98 Write to MPC [Write FIFO] Operation Timing

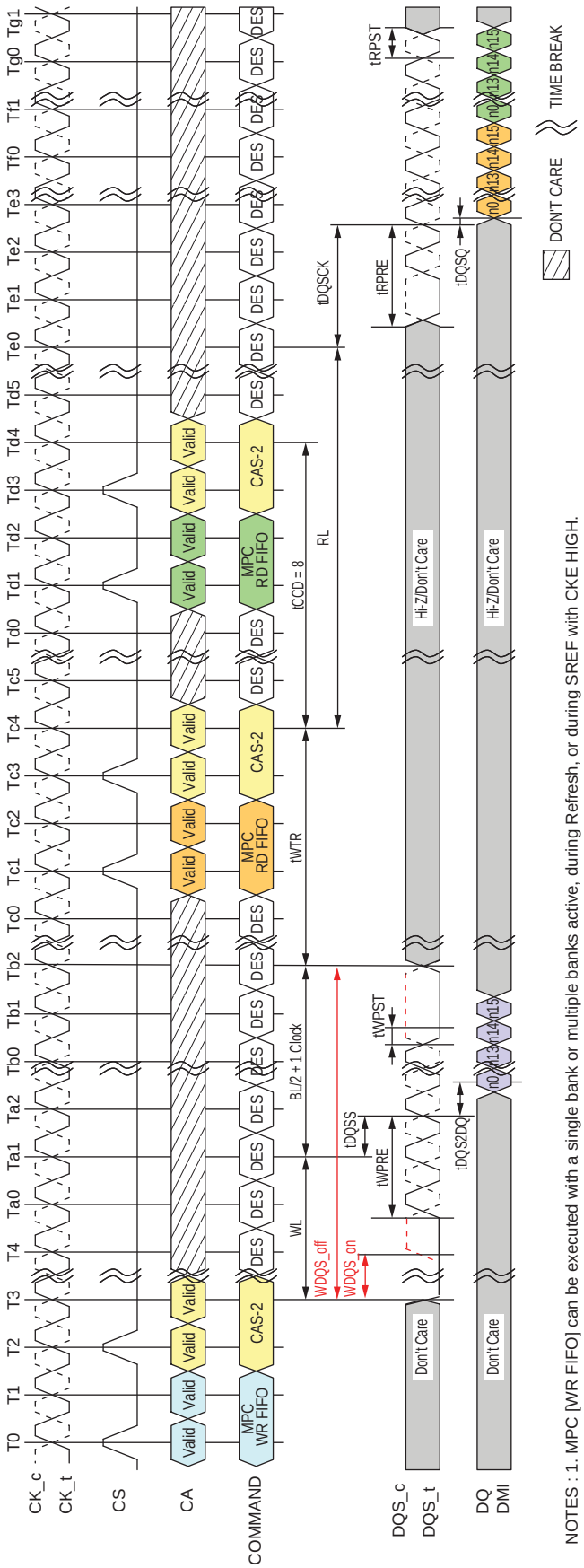

NOTES : 1. MPC [WR FIFO] can be executed with a single bank or multiple banks active, during Refresh, or during SREF with CKE HIGH.
2. MPC [WR-FIFO] to MPC [RD-FIFO] is shown as an example of command-to-command timing for MPC.
Timing from MPC [WR-FIFO] to MPC [RD-FIFO] is specified in the command-to-command timing table.
3. Seamless MPC [RD-FIFO] commands may be executed by repeating the command every tCCD time.
4. MPC [RD-FIFO] uses the same command-to-data timing relationship (RL, tDQSCK, tDQSQ) as a Read-1 command.
5. Data may be continuously read from the FIFO without any data corruption. After 5 MPC [RD-FIFO] commands the FIFO pointer will wrap back to the 1st FIFO and continue advancing. If fewer than 5 MPC [WR-FIFO] commands were executed, then the MPC [RD-FIFO] commands to those FIFO locations will return undefined data. See the Write Training section for more information on the FIFO pointer behavior.
6. For the CAS-2 command immediately following a MPC command, the CAS-2 operands must be driven "LOW."
7. DMI[1:0] signals will be driven if any of WR-DBI, RD-DBI, or DM is enabled in the mode registers. See Write Training section for more information on DMI behavior.
8. BL = 16, Write Postamble = 0.5nCK, Read Preamble: Toggle, Read Postamble: 0.5nCK
9. DES commands are shown for ease of illustration; other commands may be valid at these times.

Figure 4.99 — MPC [Write FIFO] to MPC [Read FIFO] Tming

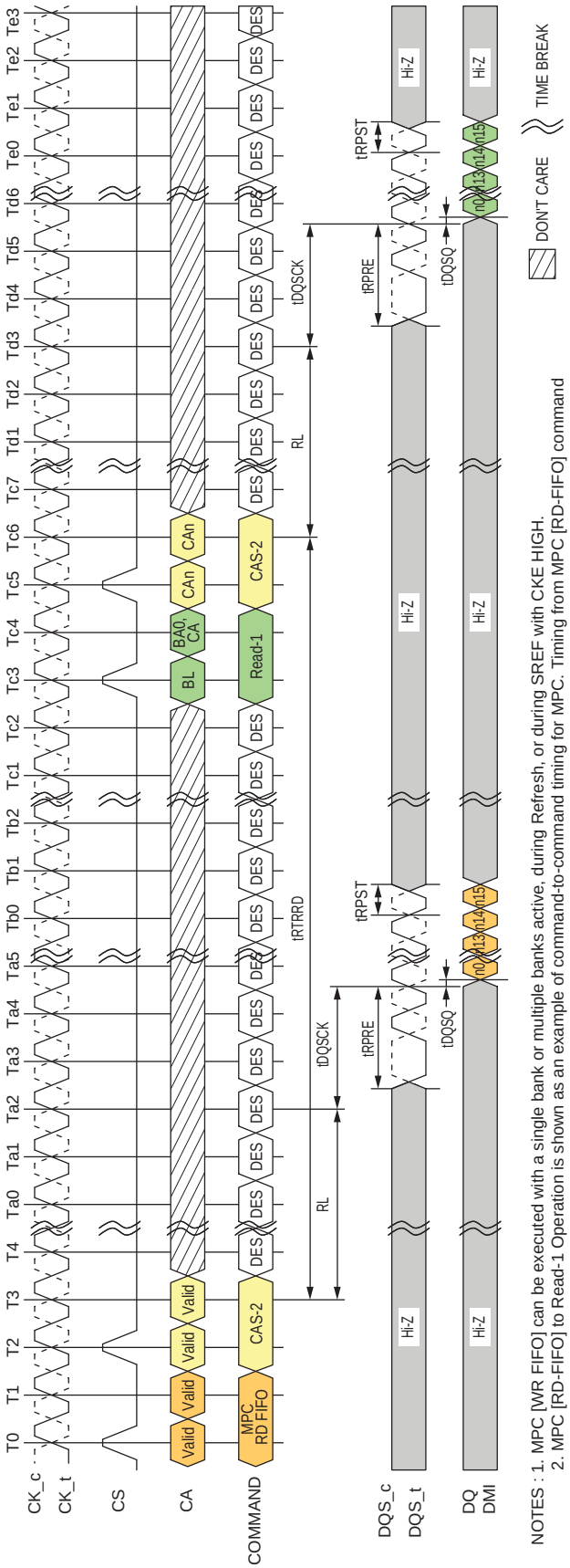

NOTES : 1. MPC [WR FIFO] can be executed with a single bank or multiple banks active, during Refresh, or during SREF with CKE HIGH.
2. MPC [RD-FIFO] to Read-1 Operation is shown as an example of command-to-command timing for MPC. Timing from MPC [RD-FIFO] command to Read is tRTRRD.
3. Seamless MPC [RD-FIFO] commands may be executed by repeating the command every tCCD time.
4. MPC [RD-FIFO] uses the same command-to-data timing relationship (RL, tDQSCK, tDQSQ) as a Read-1 command.
5. Data may be continuously read from the FIFO without any data corruption. After 5 MPC [RD-FIFO] commands the FIFO pointer will wrap back to the 1st FIFO and continue advancing. If fewer than 5 MPC [WR-FIFO] commands were executed, then the MPC [RD-FIFO] commands to those FIFO locations will return undefined data. See the Write Training section for more information on the FIFO pointer behavior.
6. For the CAS-2 command immediately following a MPC command, the CAS-2 operands must be driven "LOW."
7. DMI[1:0] signals will be driven if any of WR-DBI, RD-DBI, or DM is enabled in the mode registers. See Write Training section for more information on DMI behavior.
8. BL = 16, Read Preamble: Toggle, Read Postamble: 0.5nCK
9. DES commands are shown for ease of illustration; other commands may be valid at these times.

Figure 4.100 — MPC [Read FIFO] to Read Timing

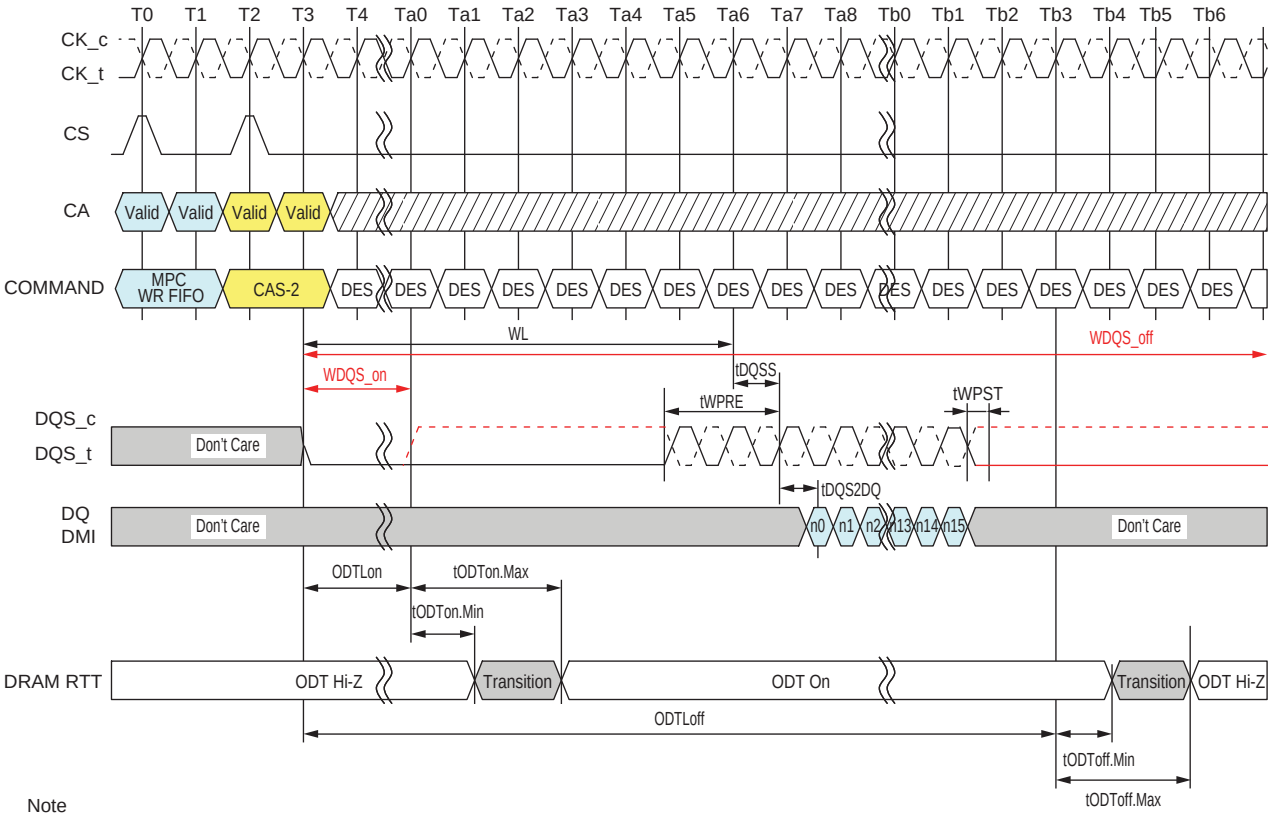

Note
1. MPC [WR FIFO] can be executed with a single bank or multiple banks active, during Refresh, or during SREF with CKE HIGH.
2. MPC [WR-FIFO] uses the same command-to-data/ODT timing relationship (WL, tDQSS, tDQS2DQ, ODTLon, ODTLoff, tODTon, tODToff) as a Write-1 command.
3. For the CAS-2 command immediately following a MPC command, the CAS-2 operands must be driven "LOW."
4. BL = 16, Write Postamble = 0.5nCK
5. DES commands are shown for ease of illustration; other commands may be valid at these times.

DON'T CARE TIME BREAK

Figure 4.101 — MPC [Write FIFO] with DQ ODT Timing

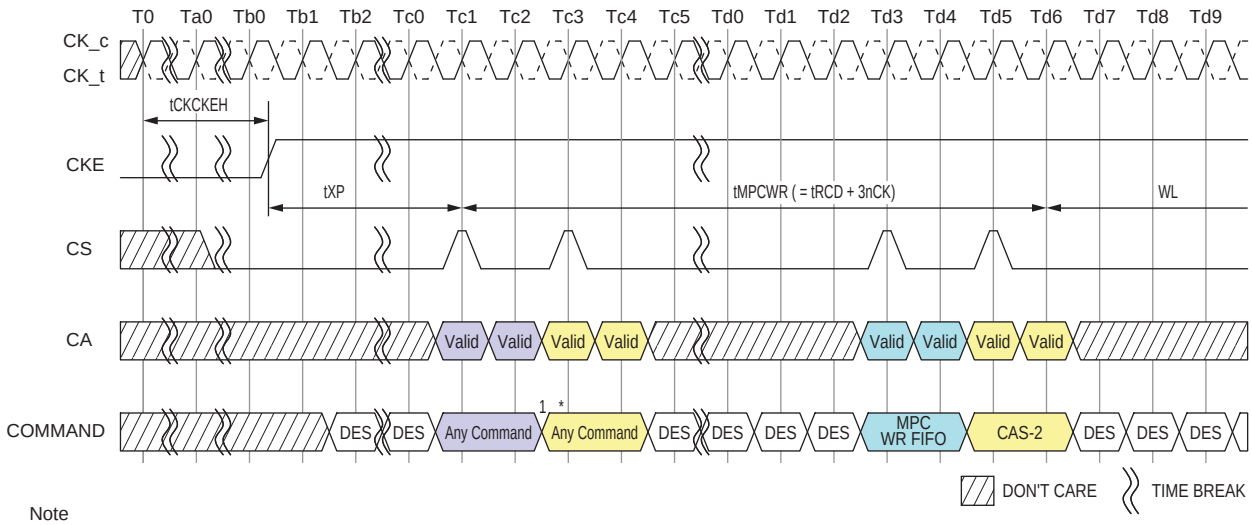

Note
1. Any commands except MPC WR FIFO and other exception commands defined other section in this document (i.e. MPC Read DQ Cal).
2. DES commands are shown for ease of illustration; other commands may be valid at these times.

Figure 4.102 — Power Down Exit to MPC [Write FIFO]

Timing Table 4.44 — MPC [Write FIFO] AC Timing

Parameter	Symbol	Min/ Max	Data Rate	Unit	Note
MPC Write FIFO Timing					
Additional time after tXP has expired until MPC [Write FIFO] command may be issued	tMPCWR	Min	tRCD + 3nCK	ns	

4.30 DQS Interval Oscillator

As voltage and temperature change on the SDRAM die, the DQS clock tree delay will shift and may require re-training. The LPDDR4-SDRAM includes an internal DQS clock-tree oscillator to measure the amount of delay over a given time interval (determined by the controller), allowing the controller to compare the trained delay value to the delay value seen at a later time. The DQS Oscillator will provide the controller with important information regarding the need to re-train, and the magnitude of potential error.

The DQS Interval Oscillator is started by issuing a MPC [Start DQS Osc] command with OP[6:0] set as described in the MPC Operation section, which will start an internal ring oscillator that counts the number of time a signal propagates through a copy of the DQS clock tree.

The DQS Oscillator may be stopped by issuing a MPC [Stop DQS Osc] command with OP[6:0] set as described in the MPC Operation section, or the controller may instruct the SDRAM to count for a specific number of clocks and then stop automatically (See MR23 for more information). If MR23 is set to automatically stop the DQS Oscillator, then the MPC [Stop DQS Osc] command should not be used (illegal). When the DQS Oscillator is stopped by either method, the result of the oscillator counter is automatically stored in MR18 and MR19.

The controller may adjust the accuracy of the result by running the DQS Interval Oscillator for shorter (less accurate) or longer (more accurate) duration. The accuracy of the result for a given temperature and voltage is determined by the following equation:

$$\textit{DQS Oscillator Granularity Error} = \frac{2 * (\textit{DQS delay})}{\textit{Run Time}}$$

Where:
Run Time = total time between start and stop commands
DQS delay = the value of the DQS clock tree delay (tDQS2DQ min/max)

Additional matching error must be included, which is the difference between DQS training circuit and the actual DQS clock tree across voltage and temperature. The matching error is vendor specific.

Therefore, the total accuracy of the DQS Oscillator counter is given by:

DQS Oscillator Accuracy = 1 - Granularity Error - Matching Error

Example: If the total time between start and stop commands is 100ns, and the maximum DQS clock tree delay is 800ps (tDQS2DQ max), then the DQS Oscillator Granularity Error is:

$$\textit{DQS Oscillator Granularity Error} = \frac{2 * (0.8ns)}{100ns} = 1.6\%$$

This equates to a granularity timing error of 12.8ps.

Assuming a circuit Matching Error of 5.5ps across voltage and temperature, then the accuracy is:

$$\textit{DQS Oscillator Accuracy} = 1- \frac{12.8 + 5.5}{800} = 97.7\%$$

Example: Running the DQS Oscillator for a longer period improves the accuracy. If the total time between start and stop commands is 500ns, and the maximum DQS clock tree delay is 800ps (tDQS2DQ max), then the DQS Oscillator Granularity Error is:

$$\textit{DQS Oscillator Granularity Error} = \frac{2 * (0.8ns)}{500ns} = 0.32\%$$

This equates to a granularity timing error or 2.56ps.

Assuming a circuit Matching Error of 5.5ps across voltage and temperature, then the accuracy is:

$$\textit{DQS Oscillator Accuracy} = 1- \frac{2.56 + 5.5}{800} = 99.0\%$$

The result of the DQS Interval Oscillator is defined as the number of DQS Clock Tree Delays that can be counted within the “run time,” determined by the controller. The result is stored in MR18-OP[7:0] and MR19-OP[7:0]. MR18 contains the least significant bits (LSB) of the result, and MR19 contains the most significant bits (MSB) of the result. MR18 and MR19 are overwritten by the SDRAM when a MPC-1 [Stop DQS Osc] command is received. The SDRAM counter will count to its maximum value (=2^16) and stop. If the maximum value is read from the mode registers, then the memory controller must assume that the counter overflowed the register and discard the result. The longest “run time” for the oscillator that will not overflow the counter registers can be calculated as follows:

$$\textit{Longest Run Time Interval} = 2^{16} * tDQS2DQ(min) = 2^{16} * 0.2ns = 13.1us$$

4.30.1 Interval Oscillator matching error

The interval oscillator matching error is defined as the difference between the DQS training ckt(interval oscillator) and the actual DQS clock tree across voltage and temperature.

- Parameters:
  - tDQS2DQ: Actual DQS clock tree delay
  - tDQSOSC: Training ckt(interval oscillator) delay
  - OSCOffset: Average delay difference over voltage and temp(shown in Figure 4.103)
  - OSCMatch: DQS oscillator matching error

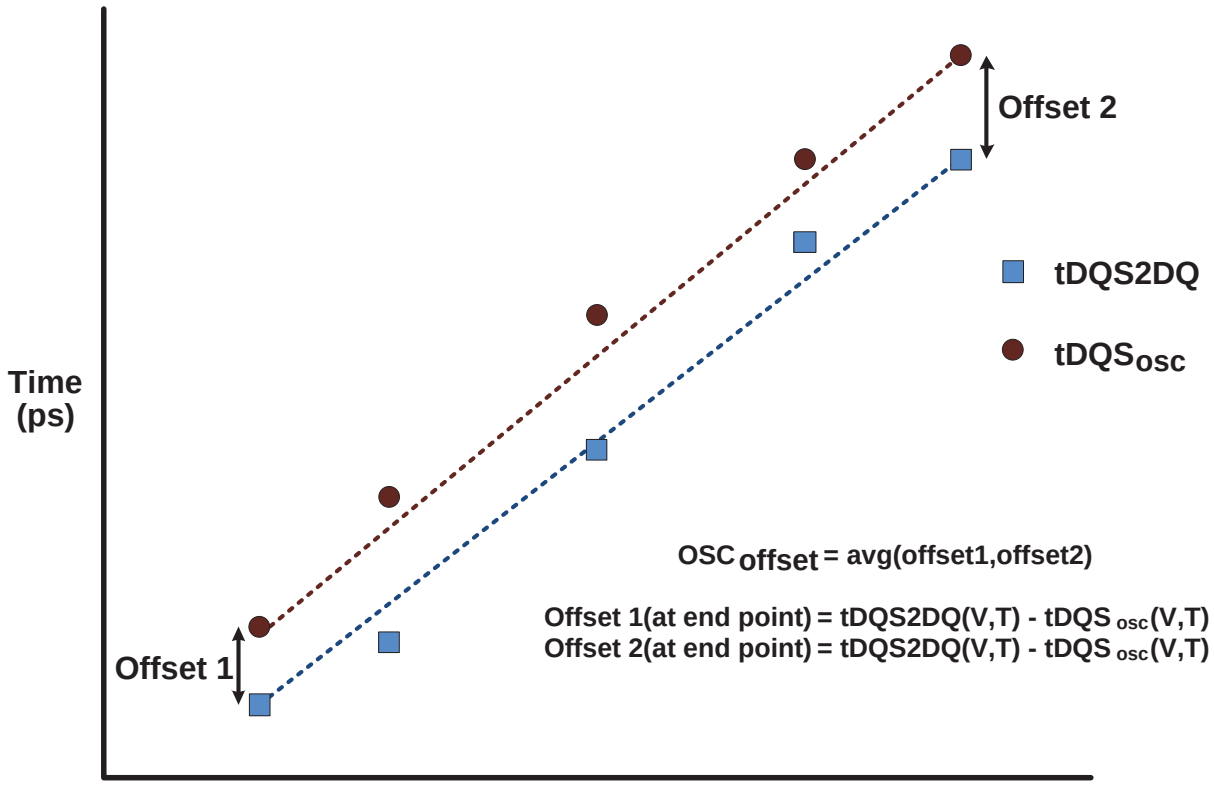

Figure 4.103 — Interval oscillator offset OSCoffset

- OSC_{Match} :

$$OSC_{Match} = [tDQS2DQ_{(V,T)} - tDQS_{OSC(V,T)} - OSC_{offset}]$$

- $tDQS_{OSC}$:

$$tDQS_{OSC(V,T)} = \frac{Runtime}{2 * Count}$$

Table 4.45 — DQS Oscillator Matching Error Specification

Parameter	Symbol	Min	Max	Units	Notes
DQS Oscillator Matching Error	OSC_{Match}	-20	20	ps	1,2,3,4,5,6,7
DQS Oscillator Offset	OSC_{offset}	-100	100	ps	2,4,7

Notes:

1. The OSC_{Match} is the matching error per between the actual DQS and DQS interval oscillator over voltage and temp.
2. This parameter will be characterized or guaranteed by design.
3. The OSC_{Match} is defined as the following:

$$OSC_{Match} = [tDQS2DQ_{(V,T)} - tDQS_{OSC(V,T)} - OSC_{offset}]$$

Where $tDQS2DQ_{(V,T)}$ and $tDQS_{OSC(V,T)}$ are determined over the same voltage and temp conditions.

4. The runtime of the oscillator must be at least 200ns for determining $tDQS_{OSC(V,T)}$

$$tDQS_{OSC(V,T)} = \frac{Runtime}{2 * Count}$$

5. The input stimulus for tDQS2DQ will be consistent over voltage and temp conditions.
6. The OSCoffset is the average difference of the endpoints across voltage and temp.
7. These parameters are defined per channel.
8. tDQS2DQ(V,T) delay will be the average of DQS to DQ delay over the runtime period.

4.30.2 DQS Interval Oscillator Readout Timing

OSC Stop to its counting value readout timing is shown in Figure 4.104 and Figuire 4.105.

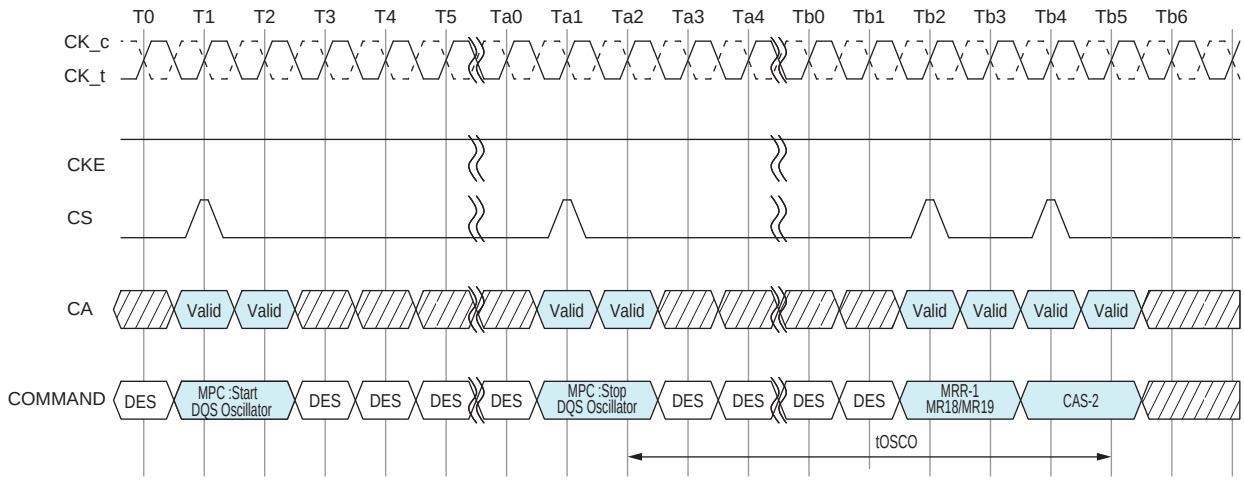

NOTES : 1. DQS interval timer run time setting : MR23 OP[7:0] = 00000000
2. DES commands are shown for ease of illustration; other commands may be valid at these times.

Figure 4.104 — In case of DQS Interval Oscillator is stopped by MPC Command T0

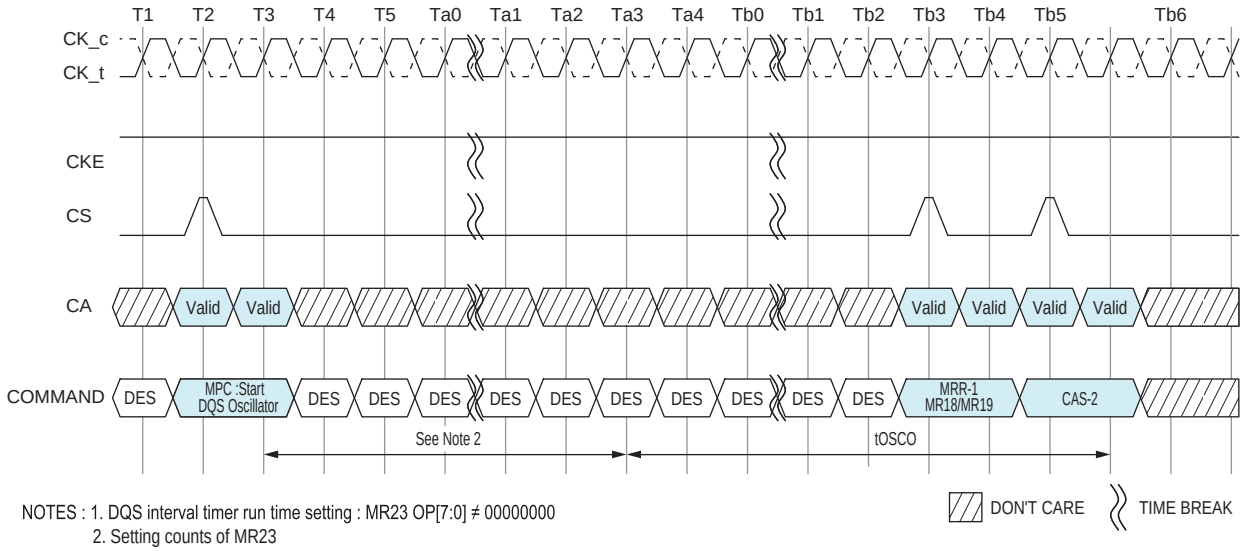

NOTES : 1. DQS interval timer run time setting : MR23 OP[7:0] ≠ 00000000
2. Setting counts of MR23
3. DES commands are shown for ease of illustration; other commands may be valid at these times.

Figure 4.105 — In case of DQS Interval Oscillator is stopped by DQS interval timer

Table 4.46 — DQS Interval Oscillator AC Timing

Parameter	Symbol	Min/Max	Value	Units	Notes
Delay time from OSC stop to Mode Register Readout	tOSCO	Min	Max(40ns,8nCK)	ns	

NOTE 1 Start DQS OSC command is prohibited until tOSCO(Min) is satisfied.

4.31 READ Preamble Training

LPDDR4 READ Preamble Training is supported through the MPC function.

This mode can be used to train or read level the DQS receivers. Once READ Preamble Training is enabled by MR13[OP1] = 1, the LPDDR4 DRAM will drive DQS_t LOW, DQS_c HIGH within tSDO and remain at these levels until an MPC DQ READ Calibration command is issued.

During READ Preamble Training the DQS preamble provided during normal operation will not be driven by the DRAM. Once the MPC DQ READ Calibration command is issued, the DRAM will drive DQS_t/DQS_c and DQ like a normal READ burst after RL and tDQSCK. Prior to the MPC DQ READ Calibration command, the DRAM may or may not drive DQ[15:0] in this mode.

While in READ Preamble Training Mode, only READ DQ Calibration commands may be issued.

- Issue an MPC [RD DQ Calibration] command followed immediately by a CAS-2 command.
  - Each time an MPC [RD DQ Calibration] command followed by a CAS-2 is received by the LPDDR4 SDRAM, a 16-bit data burst will, after the currently set RL, drive the eight bits programmed in MR32 followed by the eight bits programmed in MR40 on all I/O pins.
  - The data pattern will be inverted for I/O pins with a '1' programmed in the corresponding invert mask mode register bit.
  - Note that the pattern is driven on the DMI pins, but no data bus inversion function is enabled, even if Read DBI is enabled in the DRAM mode register.
  - This command can be issued every tCCD seamlessly.
  - The operands received with the CAS-2 command must be driven LOW.

READ Preamble Training is exited within tSDO after setting MR13[OP1] = 0.

LPDDR4 supports the READ Preamble Training as optional feature. Refer to vendor specific datasheets.

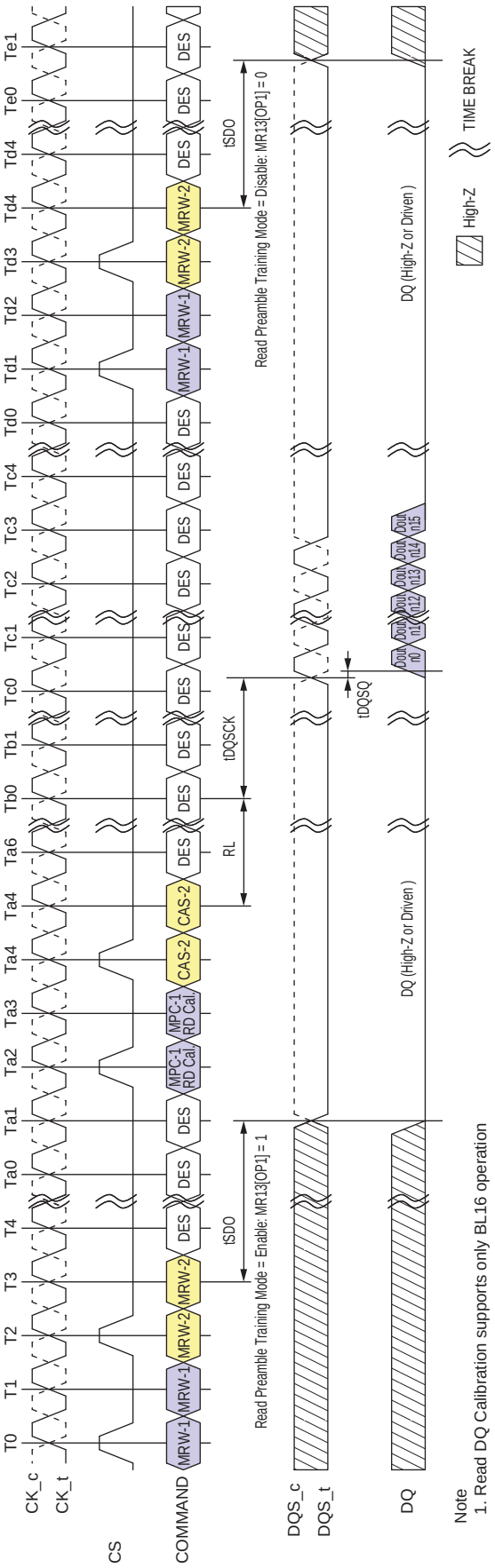

Note
1. Read DQ Calibration supports only BL16 operation

Figure 4.106 — Read Preamble Training

Table 4.47 — Timing Parameters

Parameter	Symbol	Min	Max	Unit	Notes
Delay from MRW command to DQS Driven Out	tSDO	-	Max(12nCK, 20ns)	-	

4.32 Multi-Purpose Command (MPC)

LPDDR4-SDRAMs use the MPC command to issue a NOP and to access various training modes. The MPC command is initiated with CS, and CA[5:0] asserted to the proper state at the rising edge of CK, as defined by Table 4.68. The MPC command has seven operands (OP[6:0]) that are decoded to execute spe-cific commands in the SDRAM. OP[6] is a special bit that is decoded on the first rising CK edge of the MPC command. When OP[6]=0 then the SDRAM executes a NOP (no operation) command, and when OP[6]=1 then the SDRAM further decodes one of several training commands.

When OP[6]=1 and when the training command includes a Read or Write operation, the MPC command must be followed immediately by a CAS-2 command. For training commands that Read or Write the SDRAM, read latency (RL) and write latency (WL) are counted from the second rising CK edge of the CAS-2 command with the same timing relationship as any normal Read or Write command. The operands of the CAS-2 command following a MPC Read/Write command must be driven LOW.

The following MPC commands must be followed by a CAS-2 command:

- Write FIFO
- Read FIFO
- Read DQ Calibration

All other MPC-1 commands do not require a CAS-2 command, including:

- NOP
- Start DQS Interval Oscillator
- Stop DQS Interval Oscillator
- Start ZQ Calibration
- Latch ZQ Calibration

Table 4.48 — MPC Command Definition

SDRAM Command	SDR Command Pins			SDR CA Pins						CK_t EDGE	Notes
	CKE		CS	CA0	CA1	CA2	CA3	CA4	CA5		
	CK_t(n-1)	CK_t(n)									
MPC (Train, NOP)	H	H	H	L	L	L	L		OP6	R1	1, 2
			L	OP0	OP1	OP2	OP3	OP4	OP5	R2	

Table 4.49 — MPC Command Definition for OP[6:0]

Function	Operand	Data	Notes
Training Modes	OP[6:0]	$0XXXXXX_B$: NOP 1000001_B: RD FIFO: RD FIFO supports only BL16 operation 1000011_B: RD DQ Calibration (MR32/MR40) 1000101_B: RFU 1000111_B: WR FIFO: WR FIFO supports only BL16 operation 1001001_B: RFU 1001011_B: Start DQS Osc 1001101_B: Stop DQS Osc 1001111_B: ZQCal Start 1010001_B: ZQCal Latch All Others: Reserved	1, 2, 3

Notes:

1. See Table 4.68, Command truth table for more information.
2. MPC commands for Read or Write training operations must be immediately followed by CAS-2 command consecutively without any other commands in-between. MPC command must be issued first before issuing the CAS-2 command.
3. Write FIFO and Read FIFO commands will only operate as BL16, ignoring the burst length selected by MR1 OP[1:0].

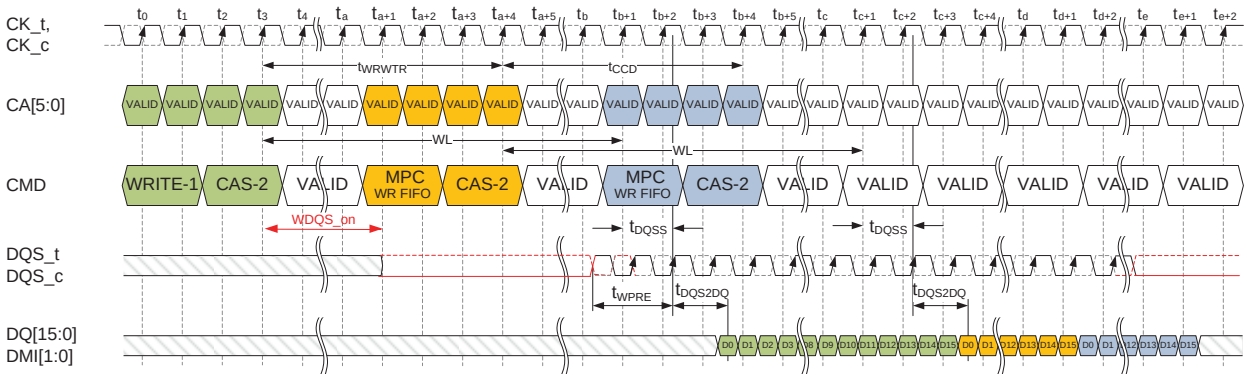

NOTES : 1. MPC [WR FIFO] can be executed with a single bank or multiple banks active, during Refresh, or during SREF with CKE HIGH.
2. Write-1 to MPC is shown as an example of command-to-command timing for MPC. Timing from Write-1 to MPC [WR-FIFO] is tWRWTR.
3. Seamless MPC [WR-FIFO] commands may be executed by repeating the command every tCCD time.
4. MPC [WR-FIFO] uses the same command-to-data timing relationship (WL, tDQSS, tDQS2DQ) as a Write-1 command.
5. A maximum of 5 MPC [WR-FIFO] commands may be executed consecutively without corrupting FIFO data.
The 6th MPC [WR-FIFO] command will overwrite the FIFO data from the first command. If fewer than 5 MPC [WR-FIFO] commands are executed, then the remaining FIFO locations will contain undefined data.
6. For the CAS-2 command following a MPC command, the CAS-2 operands must be driven "LOW."
7. To avoid corrupting the FIFO contents, MPC-1 [RD-FIFO] must immediately follow MPC-1 [WR-FIFO]/CAS-2 without any other command disturbing FIFO pointers in-between. FIFO pointers are disturbed by CKE Low, Write, Masked Write, Read, Read DQ Calibration and MRR.
See Write Training session for more information on FIFO pointer behavior.

Figure 4.107 — MPC [WRITE FIFO] Operation : tWPRE=2nCK, tWPST=0.5nCK

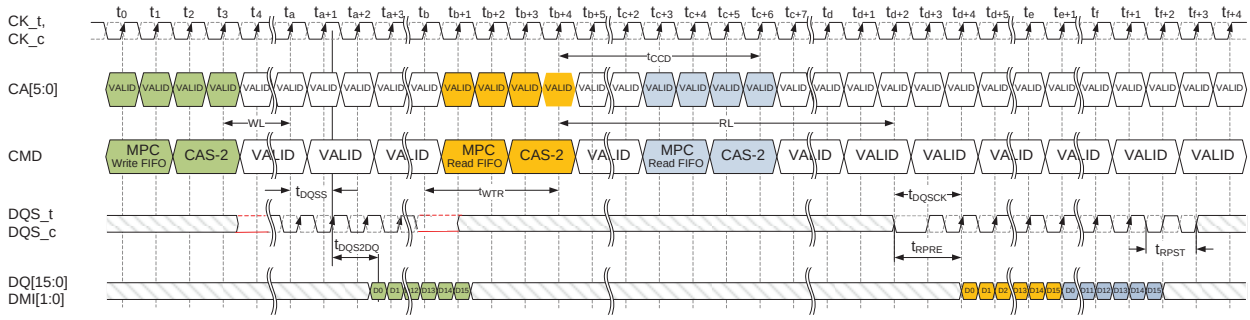

NOTES : 1. MPC [WR FIFO] can be executed with a single bank or multiple banks active, during Refresh, or during SREF with CKE HIGH.
2. Write-1 to MPC is shown as an example of command-to-command timing for MPC. Timing from Write-1 to MPC-1 [WR-FIFO] is tWRWTR.
3. Seamless MPC [RD-FIFO] commands may be executed by repeating the command every tCCD time.
4. MPC [RD-FIFO] uses the same command-to-data timing relationship (RL, tDQSCK) as a Read-1 command.
5. Data may be continuously read from the FIFO without any data corruption. After 5 MPC [RD-FIFO] commands the FIFO pointer will wrap back to the 1st FIFO and continue advancing. If fewer than 5 MPC [WR-FIFO] commands were executed, then the MPC [RD-FIFO] commands to those FIFO locations will return undefined data. See the Write Training section for more information on the FIFO pointer behavior.
6. For the CAS-2 command immediately following a MPC command, the CAS-2 operands must be driven "LOW."
7. DMI[1:0] signals will be driven if any of WR-DBI, RD-DBI, or DM is enabled in the mode registers. See Write Training section for more information on DMI behavior.

Figure 4.108 — MPC [RD FIFO] Read Operation :
tWPRE=2nCK, tWPST=0.5nCK, tRPRE=toggling, tRPST=1.5nCK

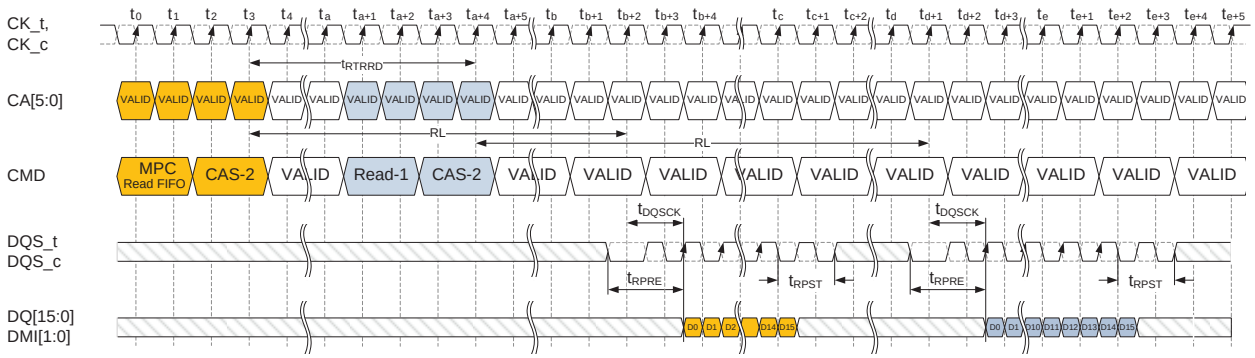

NOTES : 1. MPC [WR FIFO] can be executed with a single bank or multiple banks active, during Refresh, or during SREF with CKE HIGH.
2. MPC [RD-FIFO] to Read-1 Operation is shown as an example of command-to-command timing for MPC. Timing from MPC-1 [RD-FIFO] command to Read is tRTRRD.
3. Seamless MPC [RD-FIFO] commands may be executed by repeating the command every tCCD time.
4. MPC [RD-FIFO] uses the same command-to-data timing relationship (RL, tDQSCK) as a Read-1 command.
5. Data may be continuously read from the FIFO without any data corruption. After 5 MPC [RD-FIFO] commands the FIFO pointer will wrap back to the 1st FIFO and continue advancing. If fewer than 5 MPC [WR-FIFO] commands were executed, then the MPC [RD-FIFO] commands to those FIFO locations will return undefined data. See the Write Training section for more information on the FIFO pointer behavior.
6. For the CAS-2 command immediately following a MPC command, the CAS-2 operands must be driven “LOW.”
7. DMI[1:0] signals will be driven if any of WR-DBI, RD-DBI, or DM is enabled in the mode registers. See Write Training section for more information on DMI behavior.

Figure 4.109 — MPC [RD FIFO] Operation : tRPRE=toggling, tRPST=1.5nCK

Table 4.50 — Timing Constraints for Training Commands

Previous Command	Next Command	Minimum Delay	Unit	Notes
WR/MWR	MPC [WR FIFO]	tWRWTR	nCK	1
	MPC [RD FIFO]	Not Allowed	-	2
	MPC [RD DQ Calibration]	WL+RU(tDQSS(max)/tCK) +BL/2+RU(tWTR/tCK)	nCK	
RD/MRR	MPC [WR FIFO]	tRTRRD	nCK	3
	MPC [RD FIFO]	Not Allowed	-	2
	MPC [RD DQ Calibration]	tRTRRD	nCK	3
MPC [WR FIFO]	WR/MWR	Not Allowed	-	2
	MPC [WR FIFO]	tCCD	nCK	
	RD/MRR	Not Allowed	-	2
	MPC [RD FIFO]	WL+RU(tDQSS(max)/tCK) +BL/2+RU(tWTR/tCK)	nCK	
	MPC [RD DQ Calibration]	Not Allowed	-	2
MPC [RD FIFO]	WR/MWR	tRTRRD	nCK	3
	MPC [WR FIFO]	tRTW	nCK	4
	RD/MRR	tRTRRD	nCK	3
	MPC [RD FIFO]	tCCD	nCK	
	MPC [RD DQ Calibration]	tRTRRD	nCK	3
MPC [RD DQ Calibration]	WR/MWR	tRTRRD	nCK	3
	MPC [WR FIFO]	tRTRRD	nCK	3
	RD/MRR	tRTRRD	nCK	3
	MPC [RD FIFO]	Not Allowed	-	2
	MPC [RD DQ Calibration]	tCCD	nCK	

NOTE 1 tWRWTR = WL + BL/2 + RU(tDQSS(max)/tCK) + max(RU(7.5ns/tCK),8nCK)

NOTE 2 No commands are allowed between MPC [WR FIFO] and MPC-1 [RD FIFO] except MRW commands related to training parameters.

NOTE 3 tRTRRD = RL + RU(tDQSCK(max)/tCK) + BL/2 + RD(tRPST) + max(RU(7.5ns/tCK),8nCK)

NOTE 4 tRTW :

- In Case of DQ ODT Disable MR11 OP[2:0] = 000_B:
  RL+RU(tDQSCK(max)/ tCK) +BL/2- WL+tWPRE+RD(tRPST)
- In Case of DQ ODT Enable MR11 OP[2:0] ≠ 000_B:
  RL + RU(tDQSCK(max)/tCK) + BL/2 + RD(tRPST) - ODTLon - RD(tODTon,min/tCK) + 1

4.33 Thermal Offset

Because of their tight thermal coupling with the LPDDR4 device, hot spots on an SOC can induce thermal gradients across the LPDDR4 device. As these hot spots may not be located near the device thermal sensor, the devices' temperature compensated self-refresh circuit may not generate enough refresh cycles to guarantee memory retention. To address this shortcoming, the controller can provide a thermal offset that the memory uses to adjust its TCSR circuit to ensure reliable operation.

This offset is provided through MR4(6:5) to either or to both the channels. This temperature offset may modify refresh behavior for the channel to which the offset is provided. It will take a max of 200us to have the change reflected in MR4(2:0) for the channel to which the offset is provided. If the induced thermal gradient from the device temperature sensor location to the hot spot location of the controller is larger than 15 °C, then self-refresh mode will not reliably maintain memory contents.

To accurately determine the temperature gradient between the memory thermal sensor and the induced hot spot, the memory thermal sensor location must be provided to the LPDDR4 memory controller.

Use of thermal offset function is optional. Please refer to 3.4.5 MR4 Register Information.

4.34 Temperature Sensor

LPDDR4 devices feature a temperature sensor whose status can be read from MR4. This sensor can be used to determine an appropriate refresh rate, determine whether AC timing de-rating is required in the elevated temperature range, and/or monitor the operating temperature. Either the temperature sensor or the device TOPER may be used to determine whether operating temperature requirements are being met.

LPDDR4 devices shall monitor device temperature and update MR4 according to tTSI. Upon assertion of CKE (Low to High transition), the device temperature status bits shall be no older than tTSI. MR4 will be updated even when device is in self refresh state with CKE HIGH.

When using the temperature sensor, the actual device case temperature may be higher than the TOPER specification that applies for the standard or elevated temperature ranges. For example, TCASE may be above 85 °C when MR4[2:0] equals ‘b011. LPDDR4 devices shall allow for 2 °C temperature margin between the point at which the device updates the MR4 value and the point at which the controller reconfigures the system accordingly. In the case of tight thermal coupling of the memory device to external hot spots, the maximum device temperature might be higher than what is indicated by MR4.

To assure proper operation using the temperature sensor, applications should consider the following factors:

- TempGradient is the maximum temperature gradient experienced by the memory device at the temperature of interest over a range of 2 °C.
- ReadInterval is the time period between MR4 reads from the system.
- TempSensorInterval (tTSI) is maximum delay between internal updates of MR4.
- SysRespDelay is the maximum time between a read of MR4 and the response by the system.

In order to determine the required frequency of polling MR4, the system shall use the maximum TempGradient and the maximum response time of the system using the following equation:

$$\textit{TempGradient} \times (\textit{ReadInterval} + \textit{tTSI} + \textit{SysRespDelay}) \leq 2°C$$

Table 4.51 — Temperature Sensor

Parameter	Symbol	Max/Min	Value	Unit	Notes
System Temperature Gradient	TempGradient	Max	System Dependent	°C/s	
MR4 Read Interval	ReadInterval	Max	System Dependent	ms	
Temperature Sensor Interval	tTSI	Max	32	ms	
System Response Delay	SysRespDelay	Max	System Dependent	ms	
Device Temperature Margin	TempMargin	Max	2	°C	

For example, if TempGradient is 10°C/s and the SysRespDelay is 1 ms:

$$(10\ °C/s) \times (ReadInterval + 32ms + 1ms) \leq 2\ °C$$

In this case, ReadInterval shall be no greater than 167 ms.

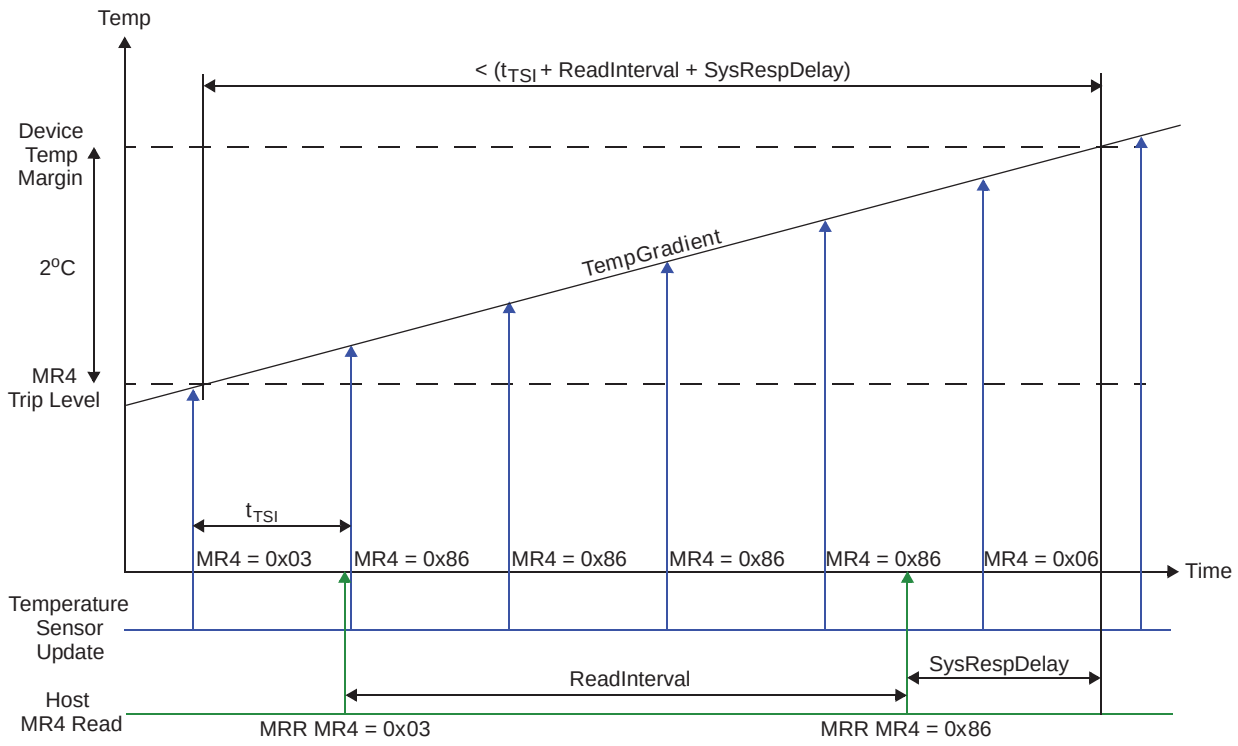

Figure 4.110 — Temp Sensor Timing

4.35 ZQ Calibration

The MPC command is used to initiate ZQ Calibration, which calibrates the output driver impedance across process, temperature, and voltage. ZQ Calibration occurs in the background of device operation, and is designed to eliminate any need for coordination between channels (i.e., it allows for channel independence).

There are two ZQ Calibration modes initiated with the MPC command: ZQCal Start, and ZQCal Latch. ZQCal Start initiates the SDRAM's calibration procedure, and ZQCal Latch captures the result and loads it into the SDRAM's drivers.

A ZQCal Start command may be issued anytime the LPDDR4-SDRAM is not in a power-down state. A ZQCal Latch Command may be issued anytime outside of power-down after tZQCAL has expired and all DQ bus operations have completed. The CA Bus must maintain a Deselect state during tZQLAT to allow CA ODT calibration settings to be updated. The following mode register fields that modify I/O parameters cannot be changed following a ZQCal Start command and before tZQCAL has expired:

- PU-Cal (Pull-up Calibration VOH Point)
- PDDS (Pull Down Drive Strength and Rx Termination)
- DQ-ODT (DQ ODT Value)
- CA-ODT (CA ODT Value)

4.35.1 ZQCal Reset

The ZQCal Reset command resets the output impedance calibration to a default accuracy of +/- 30% across process, voltage, and temperature. This command is used to ensure output impedance accuracy to +/- 30% when ZQCal Start and ZQCal Latch commands are not used.

The ZQCal Reset command is executed by writing MR10 OP[0]=1B.

Table 4.52— ZQCal Timing Parameters

Parameter	Symbol	Min/Max	Value	Unit
ZQ Calibration Time	tZQCAL	MIN	1	us
ZQ Calibration Latch Time	tZQLAT	MIN	max(30ns,8nCK)	ns
ZQ Calibration Reset Time	tZQRESET	MIN	max(50ns,3nCK)	ns

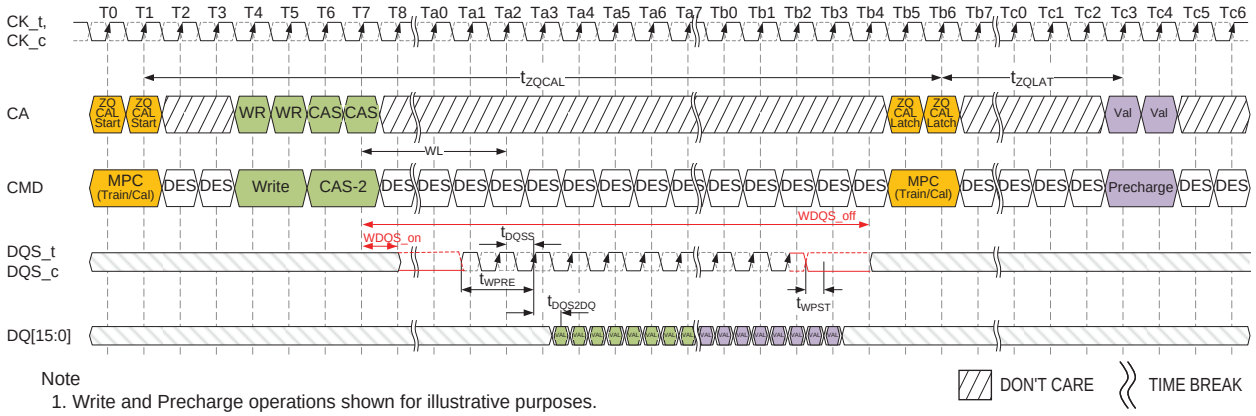

Note
1. Write and Precharge operations shown for illustrative purposes.
   Any single or multiple valid commands may be executed within the tZQCAL time and prior to latching the results.
2. Before the ZQ-Latch command can be executed, any prior commands utilizing the DQ bus must have completed.
   Write commands with DQ Termination must be given enough time to turn off the DQ-ODT before issuing the ZQ-Latch command.
   See the ODT section for ODT timing.

Figure 4.111 — ZQCal Timing

4.35.2 Multi-Channel Considerations

The LPDDR4-SDRAM includes a single ZQ pin and associated ZQ Calibration circuitry. Calibration values from this circuit will be used by both channels according to the following protocol:

1. ZQCal Start commands may be issued to either or both channels.
2. ZQCal Start commands may be issued when either or both channels are executing other commands and other commands may be issued during tZQCAL.
3. ZQCal Start commands may be issued to both channels simultaneously.
4. The ZQCal Start command will begin the calibration unless a previously requested ZQ calibration is in progress.
5. If a ZQCal Start command is received while a ZQ calibration is in progress on the SDRAM, the ZQCal Start command will be ignored and the in-progress calibration will not be interrupted.
6. ZQCal Latch commands are required for each channel.
7. ZQCal Latch commands may be issued to both channels simultaneously.
8. ZQCal Latch commands will latch results of the most recent ZQCal Start command provided tZQCAL has been met.
9. ZQCal Latch commands which do not meet tZQCAL will latch the results of the most recently completed ZQ calibration.
10. ZQ Reset MRW commands will only reset the calibration values for the channel issuing the command.

In compliance with complete channel independence, either channel may issue ZQCal Start and ZQCal Latch commands as needed without regard to the state of the other channel.

4.31.3 ZQ External Resistor, Tolerance, and Capacitive Loading

To use the ZQ calibration function, a 240 ohm +/- 1% tolerance external resistor must be connected between the ZQ pin and V_{DDQ}.

If the system configuration shares the CA bus to form a x32 (or wider) channel, the ZQ pin of each die's x16 channel shall use a separate ZQCal resistor.

If the system configuration has more than one rank, and if the ZQ pins of both ranks are attached to a single resistor, then the SDRAM controller must ensure that the ZQCal's don't overlap.

The total capacitive loading on the ZQ pin must be limited to 25pF.

Example: If a system configuration shares a CA bus between 'n' channels to form a n * 16 wide bus, and no means are available to control the ZQCal separately for each channel (i.e., separate CS, CKE, or CK), then each x16 channel must have a separate ZQCal resistor.

Example: For a x32, two rank system, each x16 channel must have its own ZQCal resistor, but the ZQCal resistor can be shared between ranks on each x16 channel. In this configuration, the CS signal can be used to ensure that the ZQCal commands for Rank[0] and Rank[1] don't overlap.

4.36 Pull Up/Pull Down Driver Characteristics and Calibration

Table 4.53 — Pull-down Driver Characteristics, with ZQ Calibration

R_{ONPD},nom	Resistor	Min	Nom	Max	Unit
40 Ohm	R_{ON40PD}	0.9	1.0	1.1	RZQ/6
48 Ohm	R_{ON48PD}	0.9	1.0	1.1	RZQ/5
60 Ohm	R_{ON60PD}	0.9	1.0	1.1	RZQ/4
80 Ohm	R_{ON80PD}	0.9	1.0	1.1	RZQ/3
120 Ohm	$R_{ON120PD}$	0.9	1.0	1.1	RZQ/2
240 Ohm	$R_{ON240PD}$	0.9	1.0	1.1	RZQ/1

Notes:

1. All value are after ZQ Calibration. Without ZQ Calibration R_{ONPD} values are ± 30%.

Table 4.54a — Pull-Up Characteristics, with ZQ Calibration for LPDDR4

VOH_{PU},nom	VOH,nom(mV)	Min	Nom	Max	Unit
V_{DDQ}/2.5	440	0.9	1.0	1.1	VOH,nom
V_{DDQ}/3	367	0.9	1.0	1.1	VOH,nom

Notes:

1. All values are after ZQ Calibration. Without ZQ Calibration VOH(nom) values are ± 30%.
2. VOH,nom (mV) values are based on a nominal V_{DDQ} = 1.1V.

Table 4.54b — Terminated Pull-Up Characteristics, with ZQ Calibration for LPDDR4X

VOH_{PU},nom	VOH,nom(mV)	Min	Nom	Max	Unit
V_{DDQ}*0.5	300	0.9	1.0	1.1	VOH,nom
V_{DDQ}*0.6	360	0.9	1.0	1.1	VOH,nom

NOTE 1 All values are after ZQ Calibration. Without ZQ Calibration VOH(nom) values are ± 30%.

NOTE 2 VOH,nom (mV) values are based on a nominal V_{DDQ} = 0.6 V.

Table 4.55a — Valid Calibration Points for LPDDR4

VOHPU,nom	ODT Value					
	240	120	80	60	48	40
V_{DDQ}/2.5	VALID	VALID	VALID	DNU	DNU	DNU
V_{DDQ}/3	VALID	VALID	VALID	VALID	VALID	VALID

Table 4.55b — Terminated Valid Calibration Points for LPDDDR4X

VOH_{PU},nom	SOC ODT Value					
	240	120	80	60	48	40
V_{DDQ}*0.5	VALID	VALID	VALID	VALID	VALID	VALID
V_{DDQ}*0.6	DNU	VALID	DNU	VALID	DNU	DNU

Notes:

1. Once the output is calibrated for a given VOH(nom) calibration point, the ODT value may be changed without recalibration.
2. If the VOH(nom) calibration point is changed, then re-calibration is required.
3. DNU = Do Not Use

4.37 On Die Termination for Command/Address Bus

ODT (On-Die Termination) is a feature of the LPDDR4 SDRAM that allows the SDRAM to turn on/off termination resistance for CK_t, CK_c, CS and CA[5:0] signals without the ODT control pin.
The ODT feature is designed to improve signal integrity of the memory channel by allowing the DRAM controller to turn on and off termination resistance for any target DRAM devices via Mode Register setting.
A simple functional representation of the DRAM ODT feature is shown in Figure 4.112.

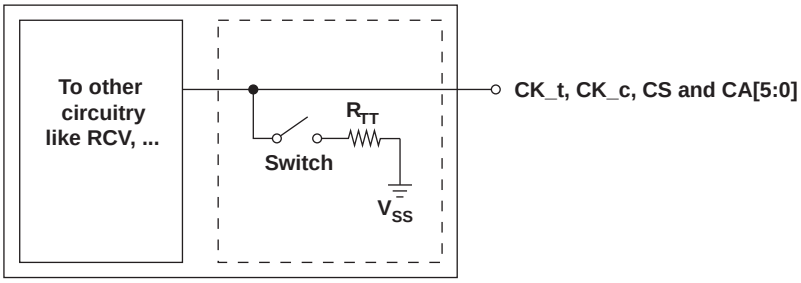

Figure 4.112 — Functional Representation of CA ODT

4.37.1 ODT Mode Register and ODT State Table for LPDDR4

ODT termination values are set and enabled via MR11. The CA bus (CK_t, CK_C, CS, CA[5:0]) ODT resistance values are set by MR11 OP[6:4]. The default state for the CA is ODT disabled.

ODT is applied on the CA bus to the CK_t, CK_c, CS and CA[5:0] signals. The CA ODT of the device is designed to enable one rank to terminate the entire command bus in a multirank system, so only one termination load will be present even if multiple devices are sharing the command signals. For this reason, CA ODT remains on even when the device is in the power-down or self-refresh power-down states.
The die has a bond-pad (ODT_CA) for multirank operations. When the ODT_CA pad is LOW, the die will not terminate the CA bus regardless of the state of the mode register CA ODT bits (MR11 OP[6:4]). If, however, the ODT_CA bond-pad is HIGH, and the mode register CA ODT bits are enabled, the die will terminate the CA bus with the ODT values found in MR11 OP[6:4]. In a multirank system, the terminating rank should be trained first, followed by the non-terminating rank(s).

Table 4.56(a) — Command Bus ODT State for LPDDR4

CA ODT MR11[6:4]	ODT_CA bond pad	ODTD-CA MR22[5]	ODTE-CK MR22[3]	ODTE-CS MR22[4]	ODT State for CA	ODT for CK	ODT State for CS
Disabled[1]	Valid[2]	Valid[3]	Valid[3]	Valid[3]	Off	Off	Off
Valid[3]	0	Valid[3]	0	0	Off	Off	Off
Valid[3]	0	Valid[3]	0	1	Off	Off	On
Valid[3]	0	Valid[3]	1	0	Off	On	Off
Valid[3]	0	Valid[3]	1	1	Off	On	On
Valid[3]	1	0	Valid[3]	Valid[3]	On	On	On
Valid[3]	1	1	Valid[3]	Valid[3]	Off	On	On

Note
1. Default Value
2. “Valid” means “H or L (but a defined logic level)”
3. “Valid” means “0 or 1”
4. The state of ODT_CA is not changed when the DRAM enters power-down mode. This maintains termination for alternate ranks in multi-rank systems.

4.37.2 ODT Mode Register and ODT State Table for LPDDR4X

ODT termination values are set and enabled via MR11. The CA bus (CK_t, CK_C, CS, CA[5:0]) ODT resistance values are set by MR11 OP[6:4]. The default state for the CA is ODT disabled.

ODT is applied on the CA bus to the CK_t, CK_c, CS and CA[5:0] signals. Generally, only one termination load will be present even if multiple devices are sharing the command signals. In contrast to LPDDR4 where the ODT_CA input is used in combination with mode registers, LPDDR4X uses mode registers exclusively to enable CA termination. Before enabling CA termination via MR11, all ranks should have appropriate MR22 termination settings programmed. In a multi rank system, the terminating rank should be trained first, followed by the nonterminating rank(s).

Table 4.56(b) — Command Bus ODT State for LPDDR4X

ODTE-CA MR11[6:4]	ODTD-CA MR22[5]	ODTF-CK MR22[3]	ODTF-CS MR22[4]	ODT State for CA	ODT State for CK_t/CK_c	ODT State for CS
Disabled[1]	Valid[2]	Valid[2]	Valid[2]	Off	Off	Off
Valid[2]	0	0	0	On	On	On
Valid[2]	0	0	1	On	On	Off
Valid[2]	0	1	0	On	Off	On
Valid[2]	0	1	1	On	Off	Off
Valid[2]	1	0	0	Off	On	On
Valid[2]	1	0	1	Off	On	Off
Valid[2]	1	1	0	Off	Off	On
Valid[2]	1	1	1	Off	Off	Off

NOTE 1 Default Value.

NOTE2 Valid" means "0 or 1" .

4.37.3 ODT Mode Register and ODT Characteristics

$$R_{TT} = \frac{Vout}{|I\ out|}$$

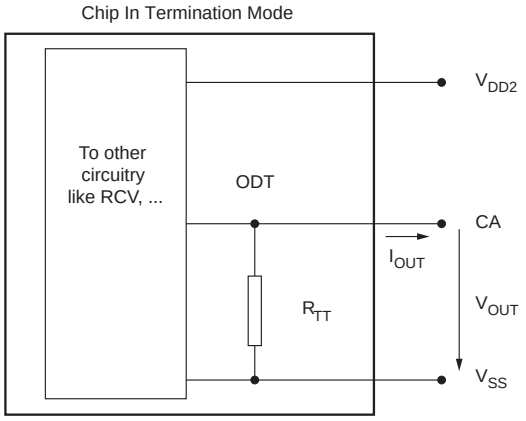

Figure 4.113a — On Die Termination for CA for LPDDR4

ODT Mode Register and ODT Characteristics

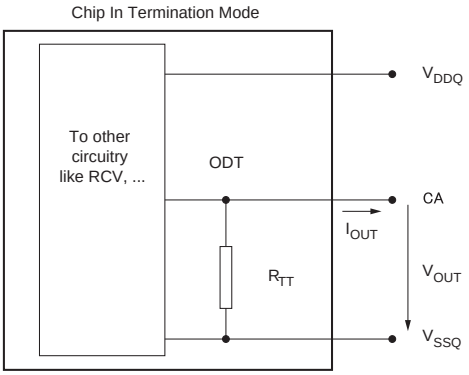

$$R_{TT} = \frac{Vout}{|Iout|}$$

Figure 4.113b — On Die Termination for CA for LPDDR4X

Table 4.57 — ODT DC Electrical Characteristics for Command/Address Bus (LPDDR4)

(RZQ = 240Ω +/-1% over the entire operating temperature range after a proper ZQ calibration)

MR11[6:4]	RTT	Vout	Min	Nom	Max	Unit	Note
001	240Ω	VOLdc= 0.1 * V_{DD2}	0.8	1.0	1.1	RZQ	1,2
		VOMdc= 0.33 * V_{DD2}	0.9	1.0	1.1	RZQ	1,2
		VOHdc= 0.5 * V_{DD2}	0.9	1.0	1.2	RZQ	1,2,4
010	120Ω	VOLdc= 0.1 * V_{DD2}	0.8	1.0	1.1	RZQ/2	1,2
		VOMdc= 0.33 * V_{DD2}	0.9	1.0	1.1	RZQ/2	1,2
		VOHdc= 0.5 * V_{DD2}	0.9	1.0	1.2	RZQ/2	1,2,4
011	80Ω	VOLdc= 0.1 * V_{DD2}	0.8	1.0	1.1	RZQ/3	1,2
		VOMdc= 0.33 * V_{DD2}	0.9	1.0	1.1	RZQ/3	1,2
		VOHdc= 0.5 * V_{DD2}	0.9	1.0	1.2	RZQ/3	1,2,4
100	60Ω	VOLdc= 0.1 * V_{DD2}	0.8	1.0	1.1	RZQ/4	1,2
		VOMdc= 0.33 * V_{DD2}	0.9	1.0	1.1	RZQ/4	1,2
		VOHdc= 0.5 * V_{DD2}	0.9	1.0	1.2	RZQ/4	1,2,4
101	48Ω	VOLdc= 0.1 * V_{DD2}	0.8	1.0	1.1	RZQ/5	1,2
		VOMdc= 0.33 * V_{DD2}	0.9	1.0	1.1	RZQ/5	1,2
		VOHdc= 0.5 * V_{DD2}	0.9	1.0	1.2	RZQ/5	1,2,4
110	40Ω	VOLdc= 0.1 * V_{DD2}	0.8	1.0	1.1	RZQ/6	1,2
		VOMdc= 0.33 * V_{DD2}	0.9	1.0	1.1	RZQ/6	1,2
		VOHdc= 0.5 * V_{DD2}	0.9	1.0	1.2	RZQ/6	1,2,4
Mismatch CA-CA within clk group		0.33* V_{DD2}	-		2	%	1,2,3

NOTE 1 The tolerance limits are specified after calibration with stable voltage and temperature. For the behavior of the tolerance limits if temperature or voltage changes after calibration, see the section on voltage and temperature sensitivity.

NOTE 2 Pull-dn ODT resistors are recommended to be calibrated at 0.33*V_{DD2}. Other calibration schemes may be used to achieve the linearity spec shown above, e.g., calibration at 0.5*V_{DD2} and 0.1*V_{DD2}.

NOTE 3 CA to CA mismatch within clock group (CA,CS) variation for a given component including CK_t and CK_c (characterized).

$$CA - CA_{Mismatch} = \frac{RODT(max) - RODT(min)}{RODT(avg)}$$

NOTE 4 The value for Max should be 1.3 for LPDDR4 with data rate greater than 3200MT/s; the value for Max should be 1.2 for LPDDR4 with data rate less than or equal to 3200MT/s.

ODT Mode Register and ODT Characteristics (cont'd)

Table 4.58 — ODT DC Electrical Characteristics for Command/Adress Bus (LPDDR4X)
(RZQ = 240Ω +/-1% over the entire operating temperature range after a proper ZQ calibration)

MR11 OP[6:4]	R_{TT}	Vout	Min	Nom	Max	Unit	Notes
001	240 Ω	VOLdc = 0.20*V_{DDQ}	0.8	1.0	1.1	RZQ	1,2
		VOMdc = 0.50*V_{DDQ}	0.9	1.0	1.1	RZQ	1,2
		VOHdc = 0.75*V_{DDQ}	0.9	1.0	1.3	RZQ	1,2
010	120 Ω	VOLdc = 0.20*V_{DDQ}	0.8	1.0	1.1	RZQ/2	1,2
		VOMdc = 0.50*V_{DDQ}	0.9	1.0	1.1	RZQ/2	1,2
		VOHdc = 0.75*V_{DDQ}	0.9	1.0	1.3	RZQ/2	1,2
011	80 Ω	VOLdc = 0.20*V_{DDQ}	0.8	1.0	1.1	RZQ/3	1,2
		VOMdc = 0.50*V_{DDQ}	0.9	1.0	1.1	RZQ/3	1,2
		VOHdc = 0.75*V_{DDQ}	0.9	1.0	1.3	RZQ/3	1,2
100	60 Ω	VOLdc = 0.20*V_{DDQ}	0.8	1.0	1.1	RZQ/4	1,2
		VOMdc = 0.50*V_{DDQ}	0.9	1.0	1.1	RZQ/4	1,2
		VOHdc = 0.75*V_{DDQ}	0.9	1.0	1.3	RZQ/4	1,2
101	48 Ω	VOLdc = 0.20*V_{DDQ}	0.8	1.0	1.1	RZQ/5	1,2
		VOMdc = 0.50*V_{DDQ}	0.9	1.0	1.1	RZQ/5	1,2
		VOHdc = 0.75*V_{DDQ}	0.9	1.0	1.3	RZQ/5	1,2
110	40 Ω	VOLdc = 0.20*V_{DDQ}	0.8	1.0	1.1	RZQ/6	1,2
		VOMdc = 0.50*V_{DDQ}	0.9	1.0	1.1	RZQ/6	1,2
		VOHdc = 0.75*V_{DDQ}	0.9	1.0	1.3	RZQ/6	1,2
Mismatch CA-CA within clk group		0.50*V_{DDQ}	-		2	%	1,2,3

NOTE 1 The tolerance limits are specified after calibration with stable voltage and temperature. For the behavior of the tolerance limits if temperature or voltage changes after calibration, see 3.4 on voltage and temperature sensitivity.

NOTE 2 Pull-dn ODT resistors are recommended to be calibrated at 0.50*V_{DDQ}. Other calibration schemes may be used to achieve the linearity spec shown above, e.g., calibration at 0.75*V_{DDQ} and 0.2*V_{DDQ}.

NOTE 3 CA to CA mismatch within clock group (CA,CS) variation for a given component including CK_t and CK_c (characterized).

$$CA - CA_{Mismatch} = \frac{RODT(max) - RODT(min)}{RODT|T(avg)}$$

4.37.4 ODT for Command/Address update time

ODT for Command/Address update time after Mode Register set are shown in Figure 4.114 and Table 4.59

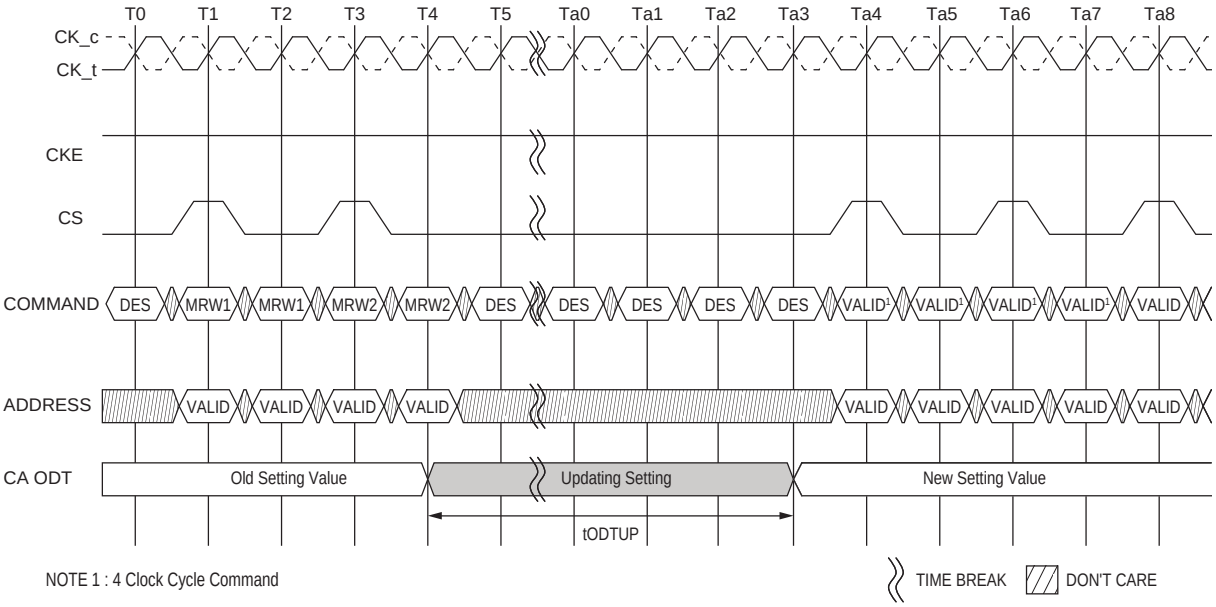

Figure 4.114 — ODT for Command/Address setting update timing in 4 Clock Cycle

Command Table 4.59 — ODT CA AC Timing

Speed				Units	NOTE
Parameter	Symbol	MIN	MAX		
ODT CA Value Update Time	tODTUP	RU(20ns/tCK(avg))	-		

4.38 DQ On-Die Termination

ODT (On-Die Termination) is a feature of the LPDDR4 SDRAM that allows the DRAM to turn on/off termination resistance for each DQ, DQS_t, DQS_c and DMI signals without the ODT control pin. The ODT feature is designed to improve signal integrity of the memory channel by allowing the DRAM controller to turn on and off termination resistance for any target DRAM devices during Write or Mask Write operation.

The ODT feature is off and cannot be supported in Power Down and Self-Refresh modes.
A simple functional representation of the DRAM ODT feature is shown in Figure 4.115.

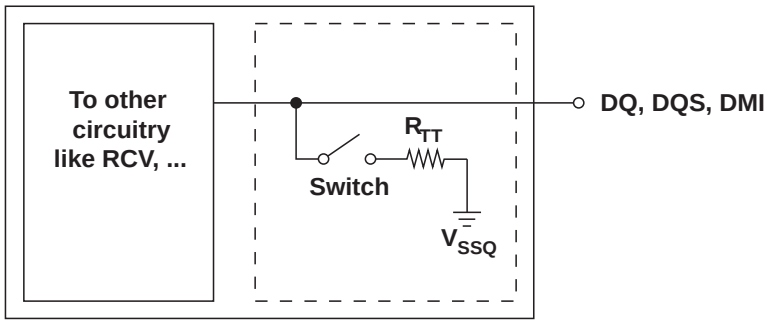

Figure 4.115 — Functional Representation of ODT

The switch is enabled by the internal ODT control logic, which uses the Write-1 or Mask Write-1 command and other mode register control information. The value of RTT is determined by the settings of Mode Register bits.

4.38.1 ODT Mode Register

The ODT Mode is enabled if MR11 OP[3:0] are non zero. In this case, the value of R_{TT} is determined by the settings of those bits. The ODT Mode is disabled if MR11 OP[3] = 0.

4.38.2 Asynchronous ODT

When ODT Mode is enabled in MR11 OP[3:0], DRAM ODT is always Hi-Z. DRAM ODT feature is automatically turned ON asynchronously based on the Write-1 or Mask Write-1 command that DRAM samples. After the write burst is complete, DRAM ODT featured is automatically turned OFF asynchronously.

Following timing parameters apply when DRAM ODT mode is enabled:

- ODTLon, tODTon,min, tODTon,max
- ODTLoff, tODToff,min, tODToff,max

ODTLon is a synchronous parameter and it is the latency from CAS-2 command to tODTon reference. ODTLon latency is a fixed latency value for each speed bin. Each speed bin has a different ODTLon latency.

Minimum RTT turn-on time (tODTon,min) is the point in time when the device termination circuit leaves high impedance state and ODT resistance begins to turn on.

Maximum RTT turn on time (tODTon,max) is the point in time when the ODT resistance is fully on.

tODTon,min and tODTon,max are measured once ODTLon latency is satisfied from CAS-2 command.

ODTLoff is a synchronous parameter and it is the latency from CAS-2 command to tODToff reference.

ODTLoff latency is a fixed latency value for each speed bin. Each speed bin has a different ODTLoff latency.

Minimum RTT turn-off time (tODToff,min) is the point in time when the device termination circuit starts to turn off the ODT resistance.

Maximum ODT turn off time (tODToff,max) is the point in time when the on-die termination has reached high impedance.

tODToff,min and tODToff,max are measured once ODTLoff latency is satisfied from CAS-2 command.

Table 4.60 — ODTLon and ODTLoff Latency Values

ODTLon Latency[1] tWPRE = 2 tCK		ODTLoff Latency[2]		Lower Clock Frequency Limit (>)	Upper Clock Frequency Limit (≤)
WL Set "A"	WL Set "B"	WL Set "A"	WL Set "B"		
4	4	14	14	10[3]	266[3]
4	4	16	18	266[3]	533[3]
4	6	18	22	533	800
4	12	20	28	800	1066
4	14	22	32	1066	1333
6	18	24	36	1333	1600
6	20	26	40	1600	1866
8	24	28	44	1866	2133
nCK	nCK	nCK	nCK	MHz	MHz

Note
1. ODTLon is referenced from CAS-2 command. See Figure 4.116.
2. ODTLoff as shown in table assumes BL=16. For BL32, 8 tCK should be added.
3. ODTLon and ODTLoff supported for this speed range, but requires Write Latency modification where WL ≥ 8 during ODTL transitions. See table Frequency Ranges for RL, WL, nWR, and nRTP settings.

Table 4.61— Asynchronous ODT Turn On and Turn Off Timing

Parameter	800 - 2133 MHz	Unit
tODTon, min	1.5	ns
tODTon, max	3.5	ns
tODToff, min	1.5	ns
tODToff, max	3.5	ns

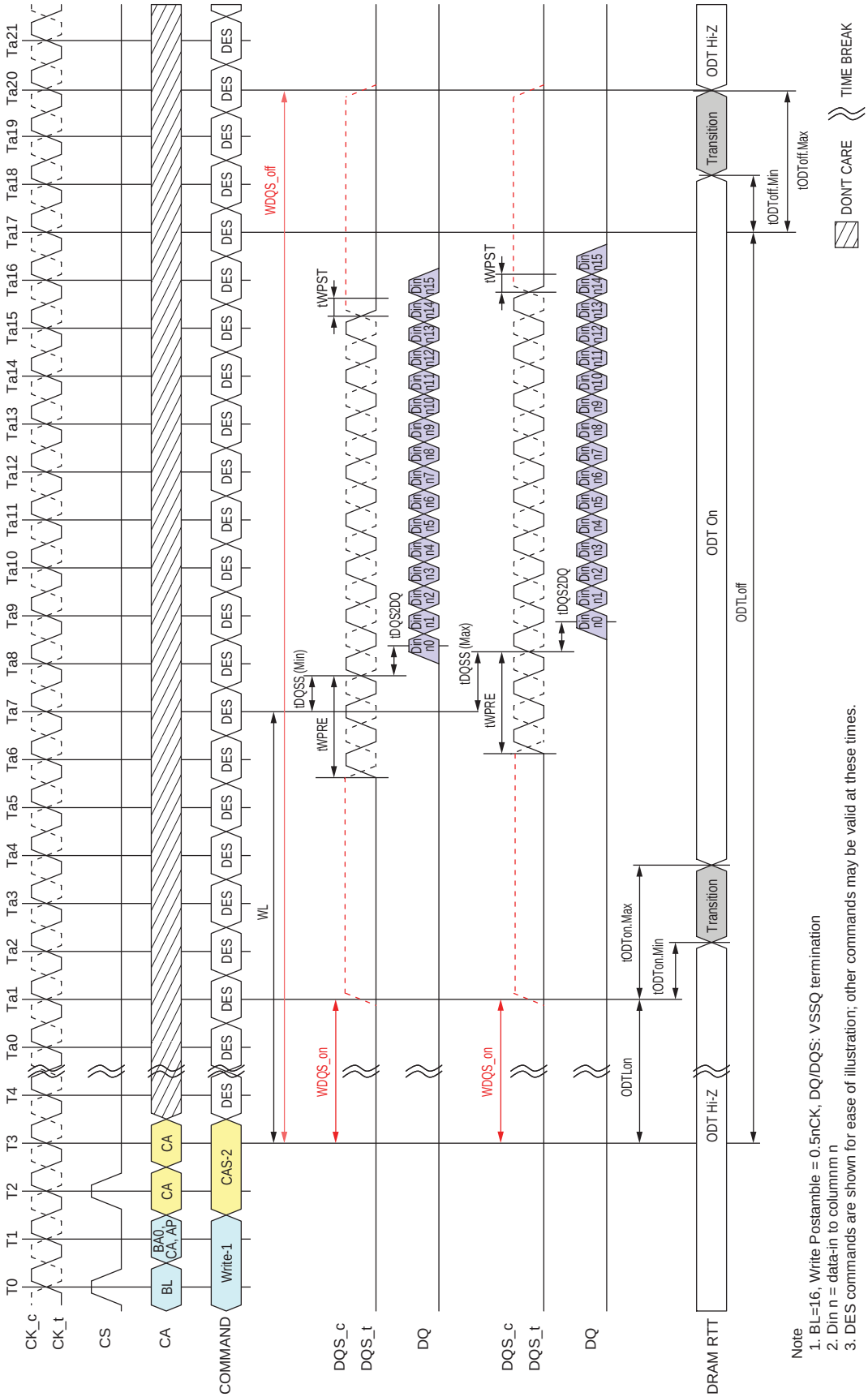

Note
1. BL=16, Write Postamble = 0.5nCK, DQ/DQS: VSSQ termination
2. Din n = data-in to columnm n
3. DES commands are shown for ease of illustration; other commands may be valid at these times.

Figure 4.116 — Asynchronous ODTon/ODToff Timing

4.38.3 ODT during Write Leveling

If ODT is enabled in MR11 OP[3:0], in Write Leveling mode, DRAM always provides the termination on DQS_t/DQS_c signals. DQ termination is always off in Write Leveling mode regardless.

Table 4.62 — DRAM Termination Function in Write Leveling Mode

ODT Enabled in MR11	DQS_t/DQS_c termination	DQ termination
Disabled	OFF	OFF
Enabled	ON	OFF

4.39 On Die Termination for DQ, DQS and DMI

On-Die Termination effective resistance RTT is defined by MR11 OP[2:0].

ODT is applied to the DQ, DMI, DQS_t and DQS_c pins.

A functional representation of the on-die termination is shown in Figure 4.117.

$$R_{TT} = \frac{Vout}{|I\ out|}$$

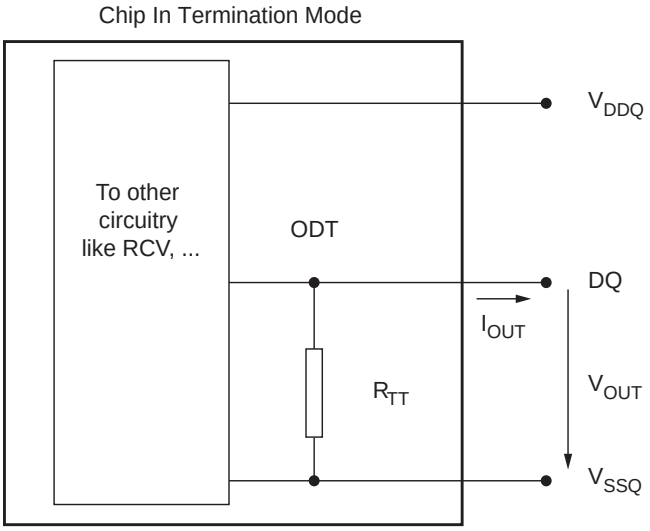

Figure 4.117 — On Die Terminiation

Table 4.63 — ODT DC Electrical Characteristics for DQ Bus for LPDDR4
(RZQ = 240Ω +/-1% over the entire operating temperature range after a proper ZQ calibration)

MR11 OP[2:0]	RTT	Vout	Min	Nom	Max	Unit	Notes
001	240Ω	VOLdc= 0.1* V_{DDQ}	0.8	1.0	1.1	RZQ	1,2
		VOMdc= 0.33* V_{DDQ}	0.9	1.0	1.1	RZQ	1,2
		VOHdc= 0.5* V_{DDQ}	0.9	1.0	1.2	RZQ	1,2,4
010	120Ω	VOLdc= 0.1* V_{DDQ}	0.8	1.0	1.1	RZQ/2	1,2
		VOMdc= 0.33* V_{DDQ}	0.9	1.0	1.1	RZQ/2	1,2
		VOHdc= 0.5* V_{DDQ}	0.9	1.0	1.2	RZQ/2	1,2,4
011	80Ω	VOLdc= 0.1* V_{DDQ}	0.8	1.0	1.1	RZQ/3	1,2
		VOMdc= 0.33* V_{DDQ}	0.9	1.0	1.1	RZQ/3	1,2
		VOHdc= 0.5* V_{DDQ}	0.9	1.0	1.2	RZQ/3	1,2,4
100	60Ω	VOLdc= 0.1* V_{DDQ}	0.8	1.0	1.1	RZQ/4	1,2
		VOMdc= 0.33* V_{DDQ}	0.9	1.0	1.1	RZQ/4	1,2
		VOHdc= 0.5* V_{DDQ}	0.9	1.0	1.2	RZQ/4	1,2,4
101	48Ω	VOLdc= 0.1* V_{DDQ}	0.8	1.0	1.1	RZQ/5	1,2
		VOMdc= 0.33* V_{DDQ}	0.9	1.0	1.1	RZQ/5	1,2
		VOHdc= 0.5* V_{DDQ}	0.9	1.0	1.2	RZQ/5	1,2,4
110	40Ω	VOLdc= 0.1* V_{DDQ}	0.8	1.0	1.1	RZQ/6	1,2
		VOMdc= 0.33* V_{DDQ}	0.9	1.0	1.1	RZQ/6	1,2
		VOHdc= 0.5* V_{DDQ}	0.9	1.0	1.2	RZQ/6	1,2,4
Mismatch DQ-DQ within channel		0.33* V_{DDQ}	-		2	%	1,2,3

NOTE 1 The tolerance limits are specified after calibration with stable voltage and temperature. For the behavior of the tolerance limits if temperature or voltage changes after calibration, see 4.40.

NOTE 2 Pull-dn ODT resistors are recommended to be calibrated at 0.33*V_{DDQ}. Other calibration schemes may be used to achieve the linearity spec shown above, e.g., calibration at 0.5*V_{DDQ} and 0.1*V_{DDQ}.

NOTE 3 DQ to DQ mismatch within byte variation for a given component including DQS_t and DQS_c (characterized).

$$DQ - DQ_{Mismatch} = \frac{RODT(max) - RODT(min)}{RODT(avg)}$$

NOTE 4 The value for Max should be 1.3 for LPDDR4 with data rate greater than 3200MT/s; the value for Max should be 1.2 for LPDDR4 with data rate less than or equal to 3200MT/s.

Table 4.64 — ODT DC Electrical Characteristics for DQ Bus for LPDDR4X
(RZQ = 240Ω +/-1% over the entire operating temperature range after a proper ZQ calibration)

MR11 OP[2:0]	R_{TT}	Vout	Min	Nom	Max	Unit	Notes
001	240 Ω	VOLdc = 0.20*V_{DDQ}	0.8	1.0	1.1	RZQ	1,2
		VOMdc = 0.50*V_{DDQ}	0.9	1.0	1.1	RZQ	1,2
		VOHdc = 0.75*V_{DDQ}	0.9	1.0	1.3	RZQ	1,2
010	120 Ω	VOLdc = 0.20*V_{DDQ}	0.8	1.0	1.1	RZQ/2	1,2
		VOMdc = 0.50*V_{DDQ}	0.9	1.0	1.1	RZQ/2	1,2
		VOHdc = 0.75*V_{DDQ}	0.9	1.0	1.3	RZQ/2	1,2
011	80 Ω	VOLdc = 0.20*V_{DDQ}	0.8	1.0	1.1	RZQ/3	1,2
		VOMdc = 0.50*V_{DDQ}	0.9	1.0	1.1	RZQ/3	1,2
		VOHdc = 0.75*V_{DDQ}	0.9	1.0	1.3	RZQ/3	1,2
100	60 Ω	VOLdc = 0.20*V_{DDQ}	0.8	1.0	1.1	RZQ/4	1,2
		VOMdc = 0.50*V_{DDQ}	0.9	1.0	1.1	RZQ/4	1,2
		VOHdc = 0.75*V_{DDQ}	0.9	1.0	1.3	RZQ/4	1,2
101	48 Ω	VOLdc = 0.20*V_{DDQ}	0.8	1.0	1.1	RZQ/5	1,2
		VOMdc = 0.50*V_{DDQ}	0.9	1.0	1.1	RZQ/5	1,2
		VOHdc = 0.75*V_{DDQ}	0.9	1.0	1.3	RZQ/5	1,2
110	40 Ω	VOLdc = 0.20*V_{DDQ}	0.8	1.0	1.1	RZQ/6	1,2
		VOMdc = 0.50*V_{DDQ}	0.9	1.0	1.1	RZQ/6	1,2
		VOHdc = 0.75*V_{DDQ}	0.9	1.0	1.3	RZQ/6	1,2
Mismatch DQ-DQ within clock group		0.50*V_{DDQ}	-		2	%	1,2,3

NOTE 1 The tolerance limits are specified after calibration with stable voltage and temperature. For the behavior of the tolerance limits if temperature or voltage changes after calibration, see 3.4 on voltage and temperature sensitivity.

NOTE 2 Pull-dn ODT resistors are recommended to be calibrated at 0.75*V_{DDQ} and 0.2*V_{DDQ}. Other calibration schemes may be used to achieve the linearity spec shown above, e.g., calibration at 0.75*V_{DDQ} and 0.1*V_{DDQ}.

NOTE 3 DQ to DQ mismatch within byte variation for a given component including DQS_t and DQS_c (characterized).

$$DQ - DQ_{Mismatch} = \frac{RODT(max) - RODT(min)}{RODT(avg)}$$

4.40 Output Driver and Termination Register Temperature and Voltage Sensitivity

If temperature and/or voltage change after calibration, the tolerance limits widen according to the Table 4.65a, Table 4.65b, and Table 4.66.

Table 4.65a — Output Driver and Termination Register Sensitivity Definition for LPDDR4

Resistor	Definition Point	Min	Max	Unit	Notes
R_{ONPD}	0.33 x V_{DDQ}	90-($dR_{on}dT$ x |ΔT|)-($dR_{on}dV$ x |ΔV|)	110+($dR_{on}dT$ x |ΔT|)+($dR_{on}dV$ x |ΔV|)	%	1,2
VOH_{PU}	0.33 x V_{DDQ}	90-(dVOHdT x |ΔT|)-(dVOHdV x |ΔV|)	110+(dVOHdT x |ΔT|)+(dVOHdV x |ΔV|)	%	1,2,5
$R_{TT(I/O)}$	0.33 x V_{DDQ}	90-($dR_{on}dT$ x |ΔT|)-($dR_{on}dV$ x |ΔV|)	110+($dR_{on}dT$ x |ΔT|)+($dR_{on}dV$ x |ΔV|)	%	1,2,3
$R_{TT(In)}$	0.33 x V_{DD2}	90-($dR_{on}dT$ x |ΔT|)-($dR_{on}dV$ x |ΔV|)	110+($dR_{on}dT$ x |ΔT|)+($dR_{on}dV$ x |ΔV|)	%	1,2,4

Note.
1. ΔT = T - T(@ Calibration), ΔV = V - V(@ Calibration)
2. $dR_{ON}dT$, $dR_{ON}dV$, dVOHdT, dVOHdV, $dR_{TT}dV$, and $dR_{TT}dT$ are not subject to production test but are verified by design and characterization.
3. This parameter applies to Input/Output pin such as DQS, DQ and DMI.
4. This parameter applies to Input pin such as CK, CA and CS.
5. Refer to Pull Up/Pull Down Driver Characteristics for VOH_{PU}.

Table 4.65(b) — Output Driver and Termination Register Sensitivity Definition for LPDDR4X

Resistor	Definition Point	Min	Max	Unit	Notes
R_{ONPD}	0.50 x V_{DDQ}	90-($dR_{on}dT$ x |ΔT|)-($dR_{on}dV$ x |ΔV|)	110+($dR_{on}dT$ x |ΔT|)+($dR_{on}dV$ x |ΔV|)	%	1,2
VOH_{PU}	0.50 x V_{DDQ}	90-(dVOHdT x |ΔT|)-(dVOHdV x |ΔV|)	110+(dVOHdT x |ΔT|)+(dVOHdV x |ΔV|)	%	1,2,5
$R_{TT(I/O)}$	0.50 x V_{DDQ}	90-($dR_{on}dT$ x |ΔT|)-($dR_{on}dV$ x |ΔV|)	110+($dR_{on}dT$ x |ΔT|)+($dR_{on}dV$ x |ΔV|)	%	1,2,3
$R_{TT(In)}$	0.50 x V_{DDQ}	90-($dR_{on}dT$ x |ΔT|)-($dR_{on}dV$ x |ΔV|)	110+($dR_{on}dT$ x |ΔT|)+($dR_{on}dV$ x |ΔV|)	%	1,2,4

NOTE 1 ΔT = T - T(@ Calibration), ΔV = V - V(@ Calibration)

NOTE 2 $dR_{ON}dT$, $dR_{ON}dV$, dVOHdT, dVOHdV, $dR_{TT}dV$, and $dR_{TT}dT$ are not subject to production test but are verified by design and characterization.

NOTE 3 This parameter applies to Input/Output pin such as DQS, DQ and DMI

NOTE 4 This parameter applies to Input pin such as CK, CA, and CS.

NOTE 5 Refer to Pull Up/Pull Down Driver Characteristics for VOH_{PU}.

Table 4.66 — Output Driver and Termination Register Temperature and Voltage Sensitivity

Symbol	Parameter	Min	Max	Unit
$dR_{ON}dT$	R_{ON} Temperature Sensitivity	0.00	0.75	%/°C
$dR_{ON}dV$	R_{ON} Voltage Sensitivity	0.00	0.20	%/mV
dVOHdT	VOH Temperature Sensitivity	0.00	0.75	%/°C
dVOHdV	VOH Voltage Sensitivity	0.00	0.35	%/mV
$dR_{TT}dT$	R_{TT} Temperature Sensitivity	0.00	0.75	%/°C
$dR_{TT}dV$	R_{TT} Voltage Sensitivity	0.00	0.20	%/mV

4.41 Power-Down Mode

4.41.1 Power-Down Entry and Exit

Power-down is asynchronously entered when CKE is driven LOW. CKE must not go LOW while the following operations are in progress:

- Mode Register Read
- Mode Register Write
- Read
- Write
- V_{REF}(CA) Range and Value setting via MRW
- V_{REF}(DQ) Range and Value setting via MRW
- Command Bus Training mode Entering/Exiting via MRW
- VRCG High Current mode Entering/Exiting via MRW

And the LPDDR4 DRAM cannot be placed in power-down state during “Start DQS Interval Oscillator” operation.

CKE can go LOW while any other operations such as row activation, Precharge, Auto Precharge, or Refresh are in progress. The power-down IDD specification will not be applied until such operations are complete. Power-down entry and exit are shown in Figure 4.118.

Entering power-down deactivates the input and output buffers, excluding CKE and Reset_n. To ensure that there is enough time to account for internal delay on the CKE signal path, CS input is required stable Low level and CA input level is don’t care after CKE is driven LOW, this timing period is defined as tCKELCS. Clock input is required after CKE is driven LOW, this timing period is defined as tCKELCK. CKE LOW will result in deactivation of all input receivers except Reset_n after tCKELCK has expired. In power-down mode, CKE must be held LOW; all other input signals except Reset_n are "Don't Care". CKE LOW must be maintained until tCKE,min is satisfied.

No refresh operations are performed in power-down mode except Self-Refresh power-down. The maximum duration in non-Self-Refresh power-down mode is only limited by the refresh requirements outlined in the Refresh command section.

The power-down state is asynchronously exited when CKE is driven HIGH. CKE HIGH must be maintained until tCKE,min is satisfied. A valid, executable command can be applied with power-down exit latency tXP after CKE goes HIGH. Power-down exit latency is defined in Table 4.67.

Clock frequency change or Clock Stop is inhibited during tCMDCKE, tCKELCK, tCKCKEH, tXP, tMRWCKEL and tZQCKE periods.

If power-down occurs when all banks are idle, this mode is referred to as idle power-down. if power-down occurs when there is a row active in any bank, this mode is referred to as active power-down. And If power-down occurs when Self Refresh is in progress, this mode is referred to as Self Refresh power-down in which the internal refresh is continuing in the same way as Self Refresh mode.

VDDQ may be turned off during power-down after tCKELCK(Max(5ns,5nCK)) is satisfied (Refer to Figure 4.118 about tCKELCK). Prior to exiting power-down, VDDQ must be within its minimum/maximum operating range.

When CA, CK and/or CS ODT is enabled via MR11 OP[6:4] and also via MR22 or CA-ODT pad setting, the rank providing ODT will continue to terminate the command bus in all DRAM states including power-down when VDDQ is stable and within its minimum/maximum operating range.

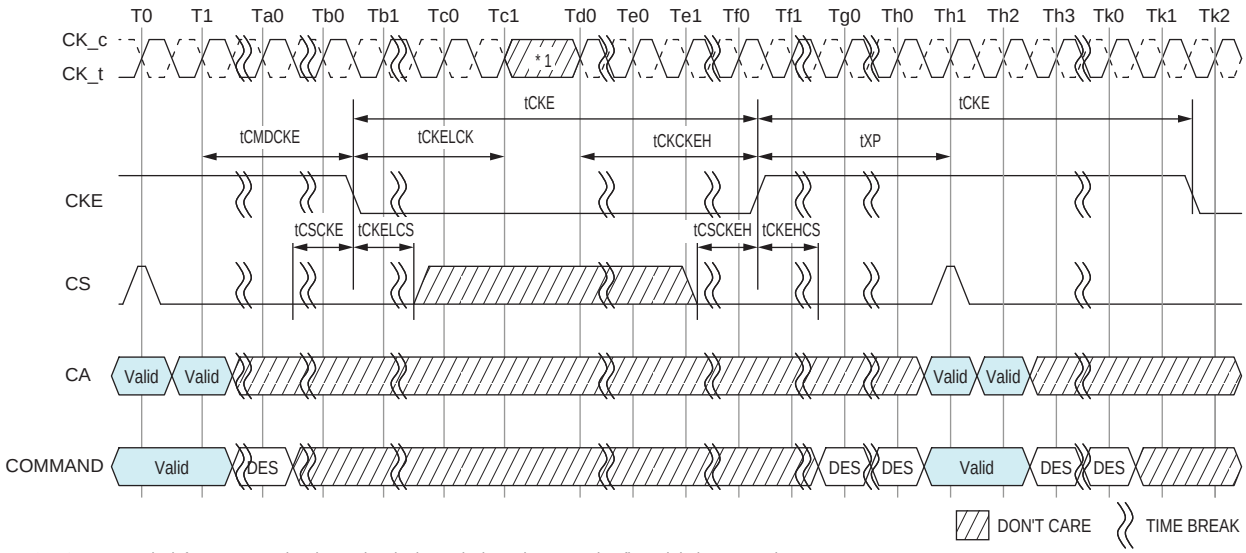

NOTES : 1. Input clock frequency can be changed or the input clock can be stopped or floated during power-down, provided that upon exiting power-down, the clock is stable and within specified limits for a minimum of tCKCKEH of stable clock prior to power-down exit and the clock frequency is between the minimum and maximum specified frequency for the speed grade in use.

Figure 4.118 — Basic Power-Down Entry and Exit Timing

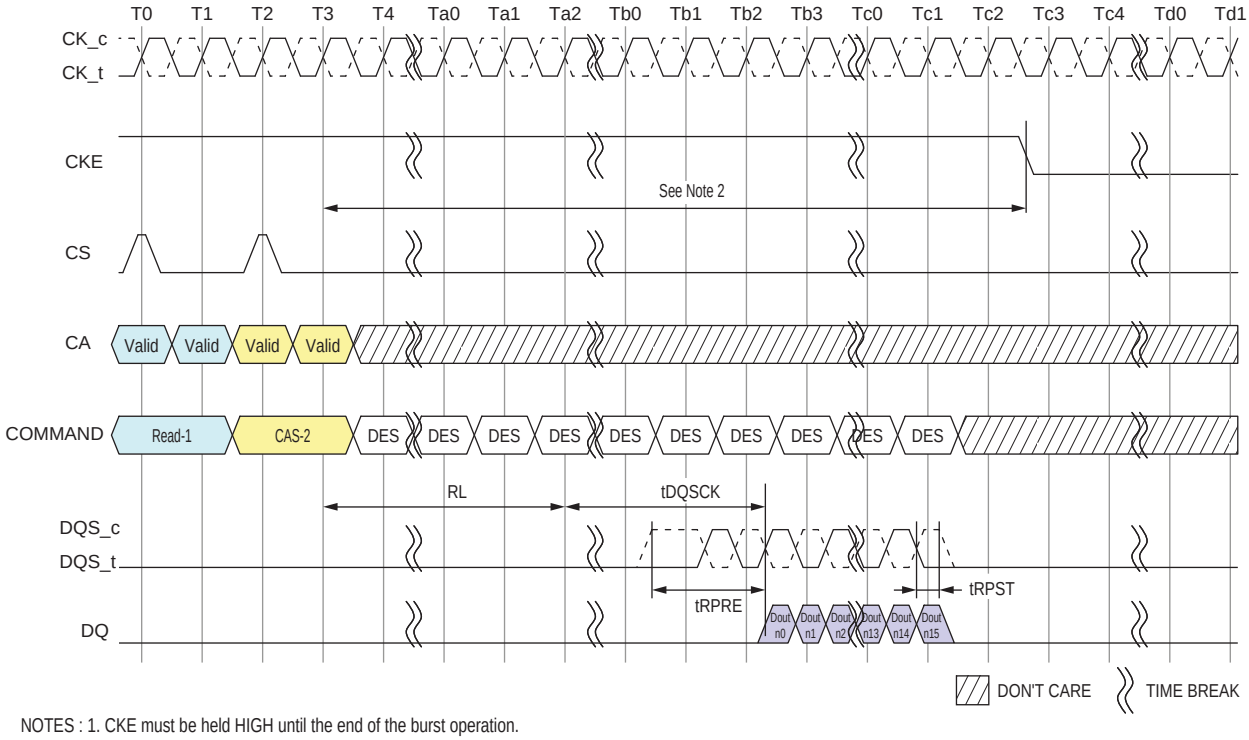

NOTES : 1. CKE must be held HIGH until the end of the burst operation.
2. Minimum Delay time from Read Command or Read with Auto Precharge Command to falling edge of CKE signal is as follows.
Read Post-amble = 0.5nCK : MR1 OP[7]=[0] : (RL x tCK) + tDQSCK(Max) + ((BL/2) x tCK) + 1tCK
Read Post-amble = 1.5nCK : MR1 OP[7]=[1] : (RL x tCK) + tDQSCK(Max) + ((BL/2) x tCK) + 2tCK

Figure 4.119 — Read and Read with Auto Precharge to Power-Down Entry

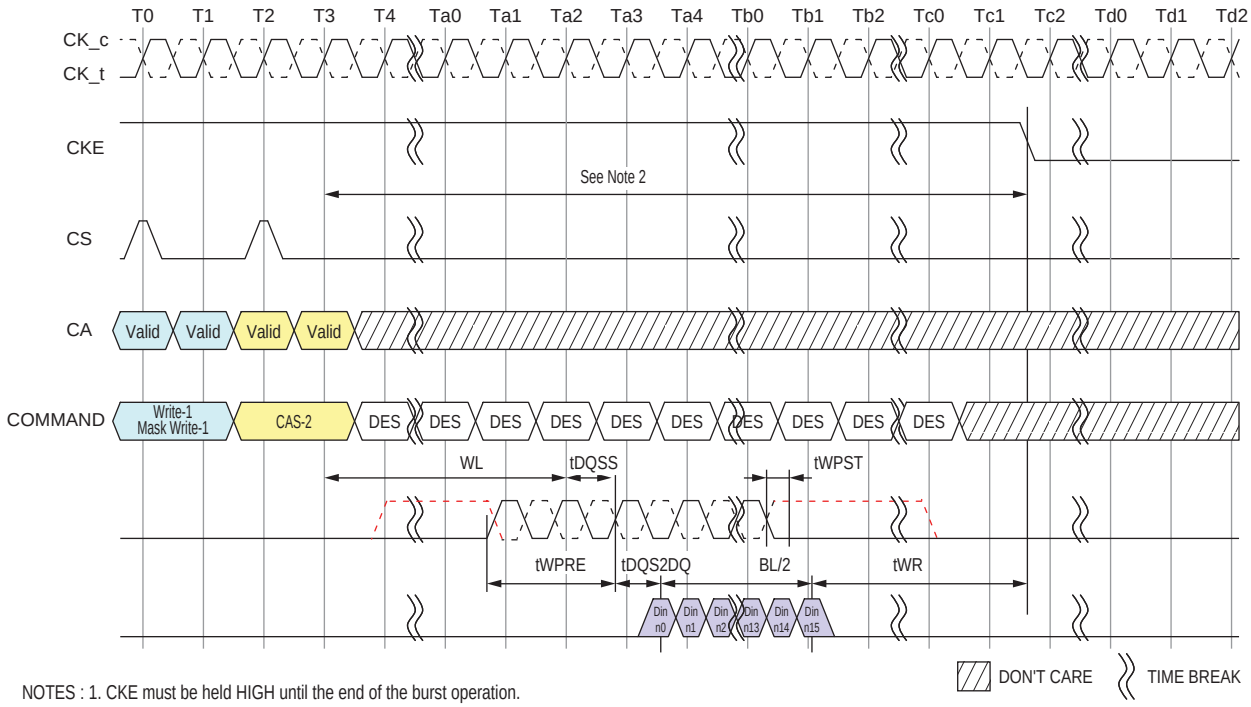

NOTES : 1. CKE must be held HIGH until the end of the burst operation.
2. Minimum Delay time from Write Command or Mask Write Command to falling edge of CKE signal is as follows.
(WL x tCK) + tDQSS(Max) + tDQS2DQ(Max) + ((BL/2) x tCK) + tWR
3. This timing is applied regardless of DQ ODT Disable/Enable setting: MR11[OP2:0].
4. This timing diagram only applies to the Write and Mask Write Commands without Auto-Precharge.

Figure 4.120 - Write and Mask Write to Power-Down Entry

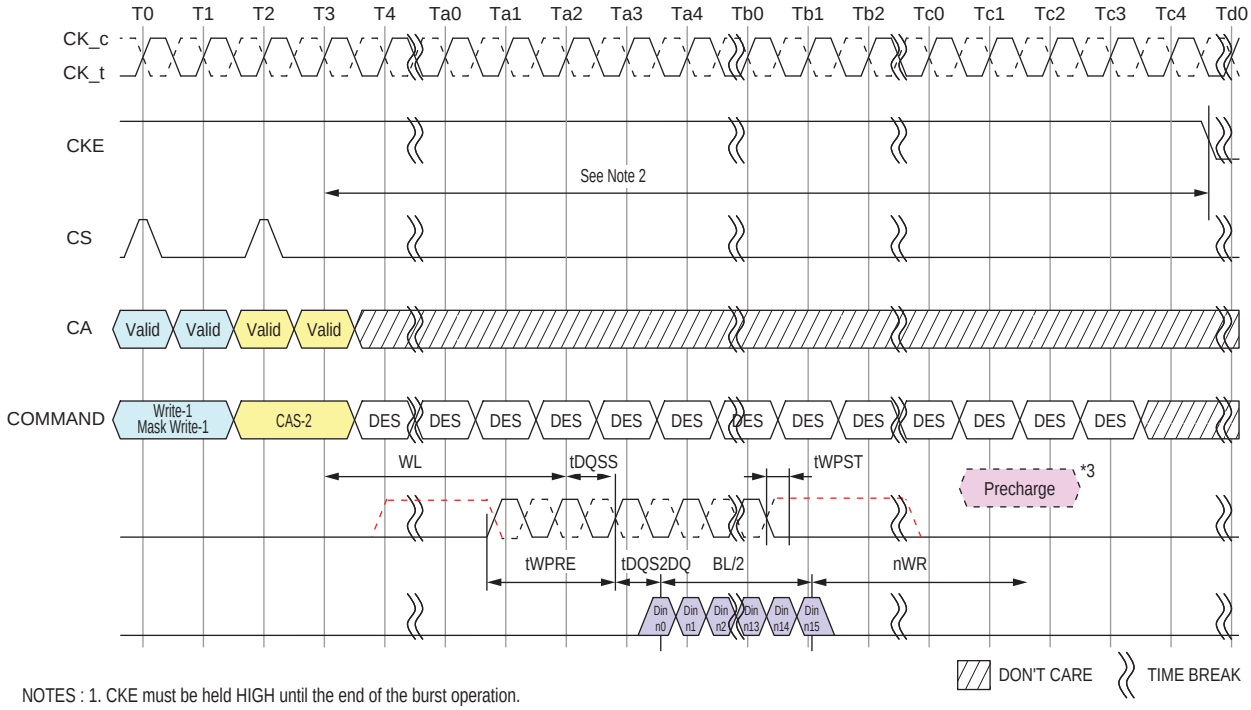

NOTES : 1. CKE must be held HIGH until the end of the burst operation.
2. Delay time from Write with Auto-Precharge Command or Mask Write with Auto-Precharge Command to falling edge of CKE signal is more than
(WL x tCK) + tDQSS(Max) + tDQS2DQ(Max) + ((BL/2) x tCK) + (nWR x tCK) + (2 x tCK)
3. Internal Precharge Command
4. This timing is applied regardless of DQ ODT Disable/Enable setting: MR11[OP2:0].

Figure 4.121 — Write with Auto Precharge and Mask Write with Auto Precharge to Power-Down Entry

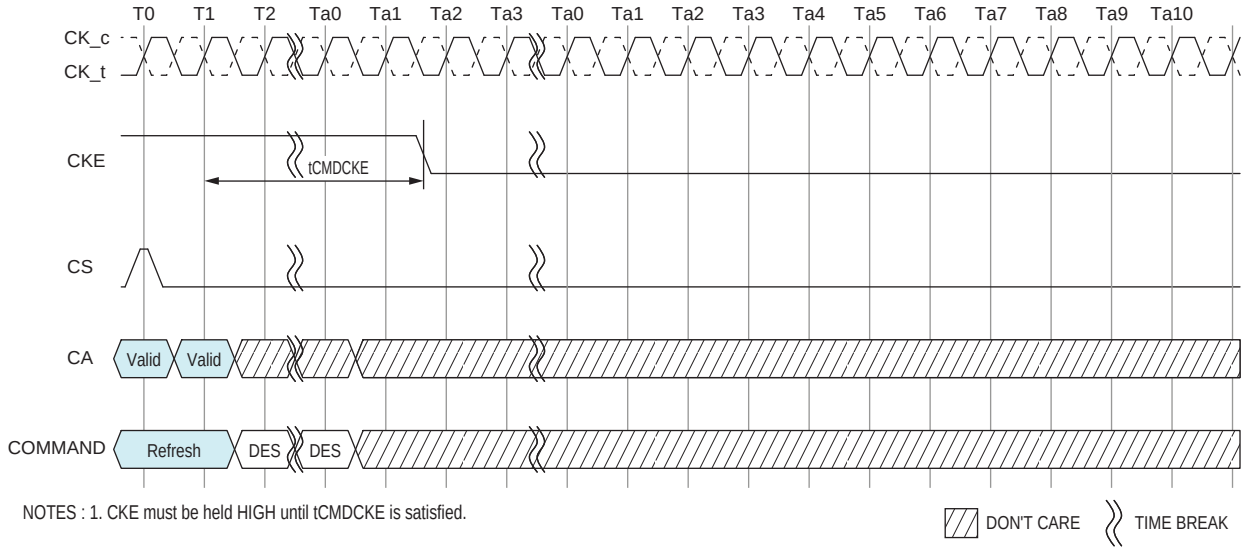

NOTES : 1. CKE must be held HIGH until tCMDCKE is satisfied.

Figure 4.122 — Refresh entry to Power-Down Entry

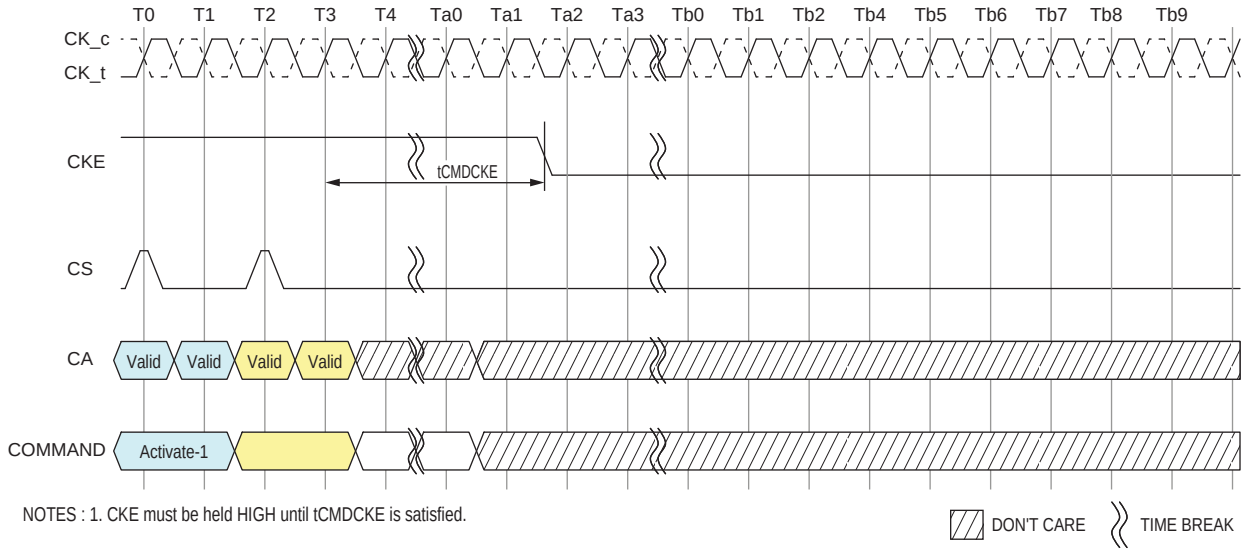

NOTES : 1. CKE must be held HIGH until tCMDCKE is satisfied.

Figure 4.123 — Activate Command to Power-Down Entry

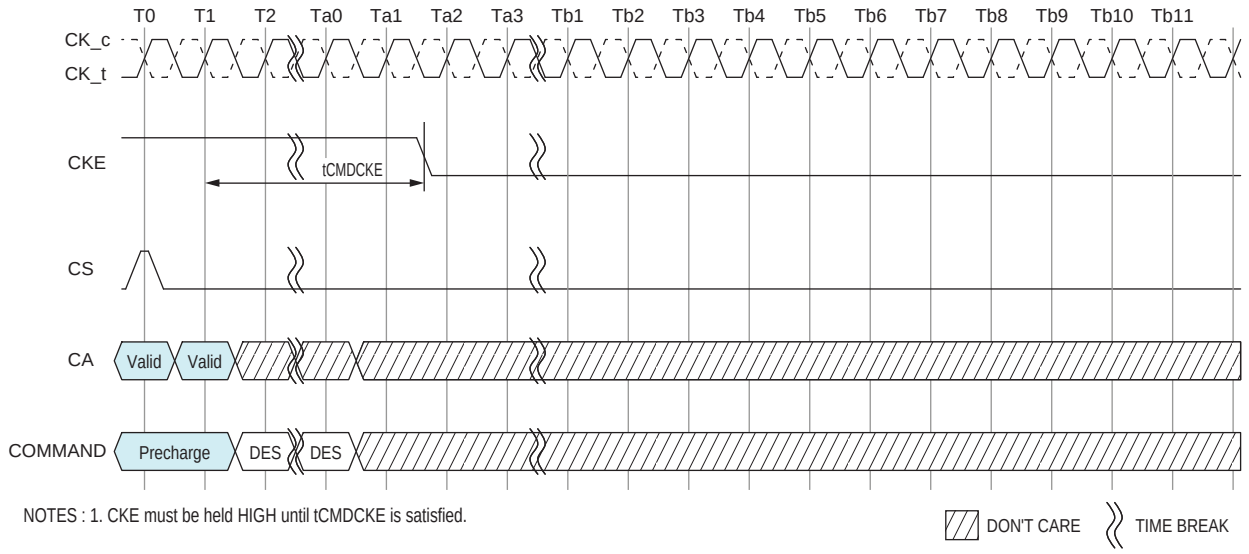

NOTES : 1. CKE must be held HIGH until tCMDCKE is satisfied.

Figure 4.124 — Precharge Command to Power-Down Entry

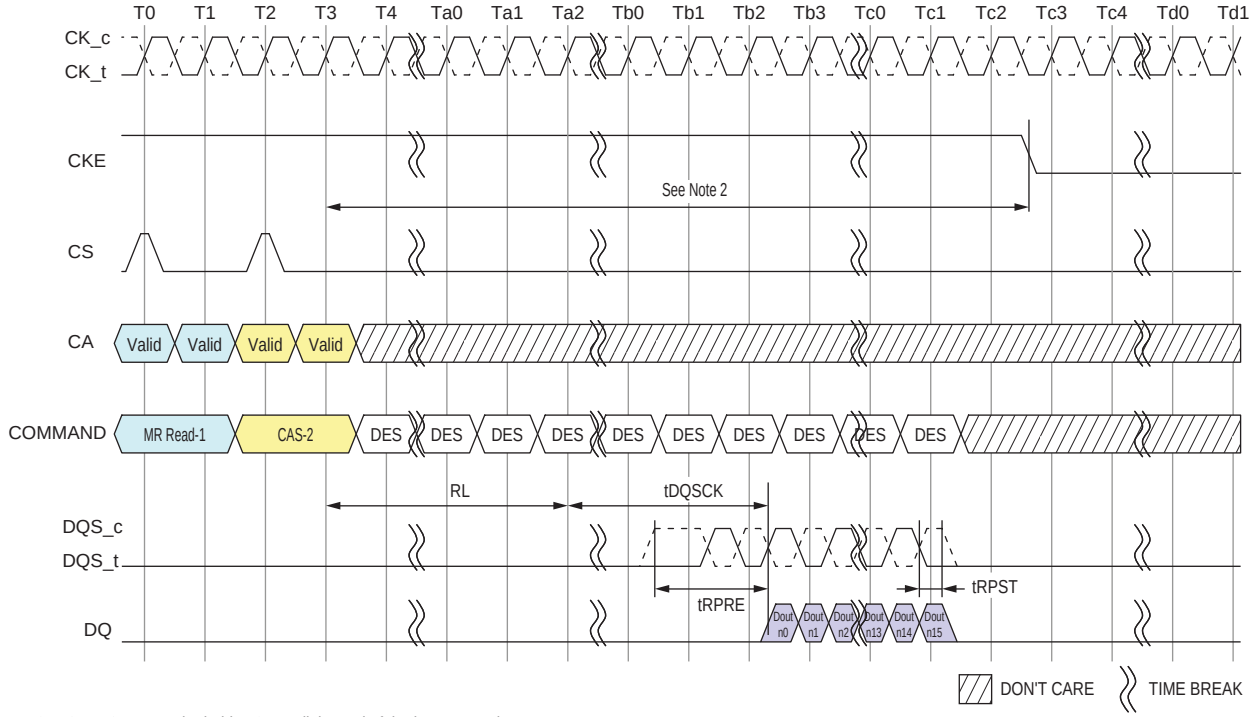

NOTES : 1. CKE must be held HIGH until the end of the burst operation.
2. Minimum Delay time from Mode Register Read Command to falling edge of CKE signal is as follows:
Read Post-amble = 0.5nCK : MR1 OP[7]=[0] : (RL x tCK) + tDQSCK(Max) + ((BL/2) x tCK) + 1tCK
Read Post-amble = 1.5nCK : MR1 OP[7]=[1] : (RL x tCK) + tDQSCK(Max) + ((BL/2) x tCK) + 2tCK

Figure 4.125 — Mode Register Read to Power-Down Entry

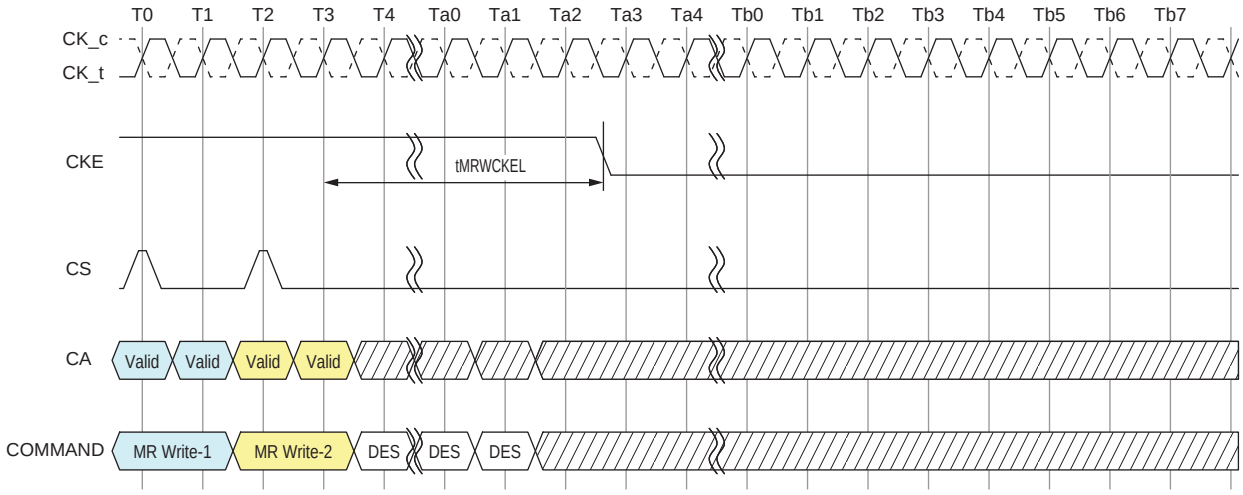

NOTES : 1. CKE must be held HIGH until tMRWCKEL is satisfied.
2. This timing is the general definition for Power Down Entry after Mode Register Write Command.
When a Mode Register Write Command changes a parameter or starts an operation that requires special timing longer than tMRWCKEL, that timing must be satisfied before CKE is driven low.
Changing the Vref(DQ) value is one example, in this case the appropriate Vref_time-Short/Middle/Long must be satisfied.

DON'T CARE TIME BREAK

Figure 4.126 — Mode Register Write to Power-Down Entry

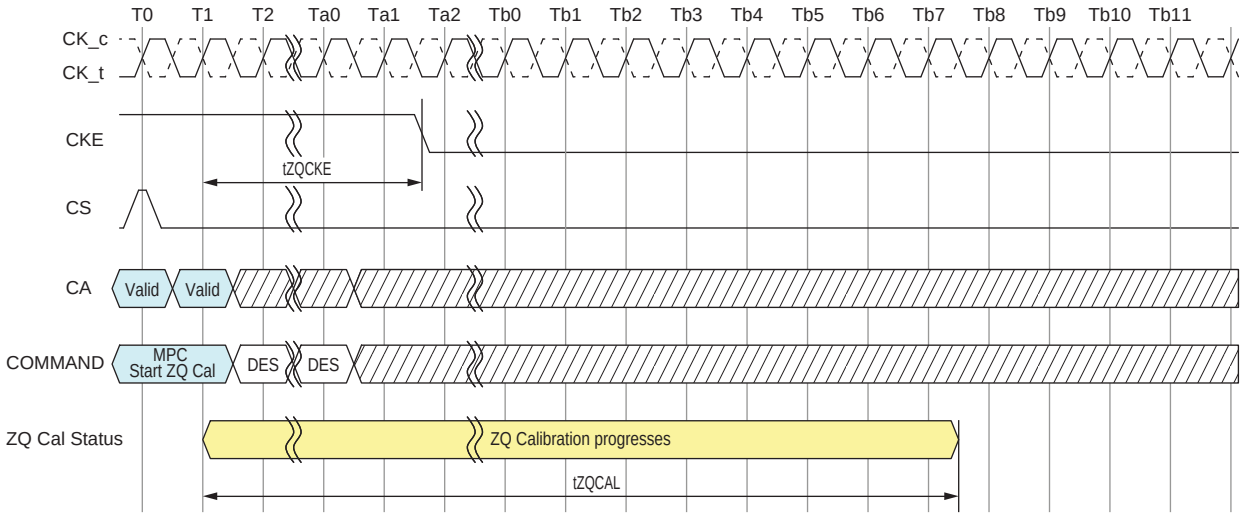

NOTES : 1. ZQ Calibration continues if CKE goes low after tZQCKE is satisfied.

DON'T CARE TIME BREAK

Figure 4.127 — Multi purpose Command for Start ZQ Calibration to Power-Down Entry

Table 4.67 — Power-Down AC Timing

Parameter	Symbol	Min/ Max	Data Rate	Unit	Note
Power Down Timing					
CKE minimum pulse width (HIGH and LOW pulse width)	tCKE	Min	Max(7.5ns, 4nCK)	-	
Delay from valid command to CKE input LOW	tCMDCKE	Min	Max(1.75ns, 3nCK)	ns	1
Valid Clock Requirement after CKE Input low	tCKELCK	Min	Max(5ns, 5nCK)	ns	1
Valid CS Requirement before CKE Input Low	tCSCKE	Min	1.75	ns	
Valid CS Requirement after CKE Input low	tCKELCS	Min	Max(5ns, 5nCK)	ns	
Valid Clock Requirement before CKE Input High	tCKCKEH	Min	Max(1.75ns, 3nCK)	ns	1
Exit power- down to next valid command delay	tXP	Min	Max(7.5ns, 5nCK)	ns	1
Valid CS Requirement before CKE Input High	tCSCKEH	Min	1.75	ns	
Valid CS Requirement after CKE Input High	tCKEHCS	Min	Max(7.5ns, 5nCK)	ns	
Valid Clock and CS Requirement after CKE Input low after MRW Command	tMRWCKEL	Min	Max(14ns, 10nCK)	ns	1
Valid Clock and CS Requirement after CKE Input low after ZQ Calibration Start Command	tZQCKE	Min	Max(1.75ns, 3nCK)	ns	1

Note:

1. Delay time has to satisfy both analog time(ns) and clock count(nCK).
   For example, tCMDCKE will not expire until CK has toggled through at least 3 full cycles (3 *tCK) and 1.75ns has transpired.
   The case which 3nCK is applied to is shown below.

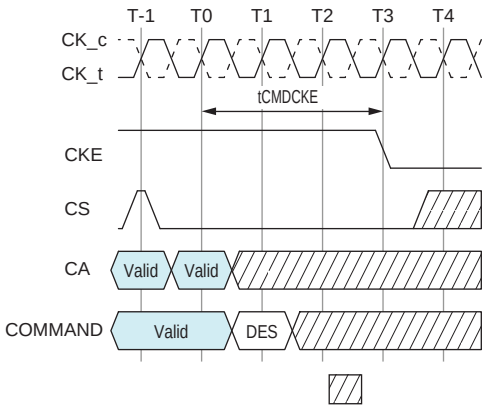

Figure 4.128 — tCMDCKE Timing

4.42 Input Clock Stop and Frequency Change

LPDDR4 SDRAMs support input clock frequency change during CKE LOW under the following conditions:

- tCK(abs)min is met for each clock cycle;
- Refresh requirements apply during clock frequency change;
- During clock frequency change, only REFab or REFpb commands may be executing;
- Any Activate or Precharge commands have executed to completion prior to changing the frequency;
- The related timing conditions (tRCD, tRP) have been met prior to changing the frequency;
- The initial clock frequency shall be maintained for a minimum of 4 clock cycles after CKE goes LOW;
- The clock satisfies tCH(abs) and tCL(abs) for a minimum of 2 clock cycles prior to CKE going HIGH

After the input clock frequency is changed and CKE is held HIGH, additional MRW commands may be required to set the WR, RL etc. These settings may need to be adjusted to meet minimum timing requirements at the target clock frequency.

LPDDR4 devices support clock stop during CKE LOW under the following conditions:

- CK_t is held LOW and CK_c is held HIGH or both are floated during clock stop;
- Refresh requirements apply during clock stop;
- During clock stop, only REFab or REFpb commands may be executing;
- Any Activate or Precharge commands have executed to completion prior to stopping the clock;
- The related timing conditions (tRCD, tRP) have been met prior to stopping the clock;
- The initial clock frequency shall be maintained for a minimum of 4 clock cycles after CKE goes LOW;
- The clock satisfies tCH(abs) and tCL(abs) for a minimum of 2 clock cycles prior to CKE going HIGH

LPDDR4 devices support input clock frequency change during CKE HIGH under the following conditions:

- tCK(abs)min is met for each clock cycle;
- Refresh requirements apply during clock frequency change;
- Any Activate, Read, Write, Precharge, Mode Register Write, or Mode Register Read commands must have executed to completion, including any associated data bursts prior to changing the frequency;
- The related timing conditions (tRCD, tWR, tRP, tMRW, tMRR, etc.) have been met prior to changing the frequency;
- CS shall be held LOW during clock frequency change;
- During clock frequency change, only REFab or REFpb commands may be executing;
- The LPDDR4 SDRAM is ready for normal operation after the clock satisfies tCH(abs) and tCL(abs) for a minimum of 2*tCK+tXP.

After the input clock frequency is changed, additional MRW commands may be required to set the WR, RL etc. These settings may need to be adjusted to meet minimum timing requirements at the target clock frequency.

LPDDR4 devices support clock stop during CKE HIGH under the following conditions:

- CK_t is held LOW and CK_c is held HIGH during clock stop;
- CS shall be held LOW during clock clock stop;
- Refresh requirements apply during clock stop;
- During clock stop, only REFab or REFpb commands may be executing;
- Any Activate, Read, Write, MPC(WRFIFO,RDFIFO,RDDQCAL), Precharge, Mode Register Write or Mode Register Read commands must have executed to completion, including any associated data bursts and extra 4 clock cycles must be provided prior to stopping the clock;
- The related timing conditions (tRCD, tWR, tRP, tMRW, tMRR, tZQLAT, etc.) have been met prior to stopping the clock;
- Read with auto pre-charge and write with auto pre-charge commands need extra 4 clock cycles in addition to the related timing constraints, nWR and nRTP, to complete the operations.
- REFab, REFpb, SRE, SRX and MPC(Zqcal Start)commands are required to have 4 additional clocks prior to stopping the clock same as CKE=L case.
- The LPDDR4 SDRAM is ready for normal operation after the clock is restarted and satisfies tCH(abs) and tCL(abs) for a minimum of 2*tCK+tXP.

4.43 Truth Tables

Operation or timing that is not specified is illegal, and after such an event, in order to guarantee proper operation, the LPDDR4 device must be reset or power-cycled and then restarted through the specified initialization sequence before normal operation can continue.

CKE signal has to be held High when the commands listed in Table 4.68 input.

4.43.1 Command Truth Table

Table 4.68 — Command Truth Table

	SDR Command Pins	SDR CA Pins (6)							
SDRAM Command	**CS**	**CA0**	**CA1**	**CA2**	**CA3**	**CA4**	**CA5**	**CK_t edge**	**Notes**
Deselect (DES)	L	X						R1	1,2
Multi Purpose Command (MPC)	H	L	L	L	L	L	OP6	R1	1,2,9
	L	OP0	OP1	OP2	OP3	OP4	OP5	R2	
Precharge (PRE) (Per Bank, All Bank)	H	L	L	L	L	H	AB	R1	1,2,3,4
	L	BA0	BA1	BA2	V	V	V	R2	
Refresh (REF) (Per Bank, All Bank)	H	L	L	L	H	L	AB	R1	1,2,3,4
	L	BA0	BA1	BA2	V	V	V	R2	
Self Refresh Entry (SRE)	H	L	L	L	H	H	V	R1	1,2
	L	V						R2	
Write -1 (WR-1)	H	L	L	H	L	L	BL	R1	1,2,3,6,7,9
	L	BA0	BA1	BA2	V	C9	AP	R2	
Self Refresh Exit (SRX)	H	L	L	H	L	H	V	R1	1,2
	L	V						R2	
Mask Write -1 (MWR-1)	H	L	L	H	H	L	L	R1	1,2,3,5,6,9
	L	BA0	BA1	BA2	V	C9	AP	R2	
RFU	H	L	L	H	H	H	V	R1	1,2
	L	V						R2	
Read -1 (RD-1)	H	L	H	L	L	L	BL	R1	1,2,3,6,7,9
	L	BA0	BA1	BA2	V	C9	AP	R2	
CAS-2 (Write-2, Mask Write -2, Read-2, MRR-2, MPC)	H	L	H	L	L	H	C8	R1	1,8,9
	L	C2	C3	C4	C5	C6	C7	R2	
RFU	H	L	H	L	H	L	V	R1	1,2
	L	V						R2	
RFU	H	L	H	L	H	H	V	R1	1,2
	L	V						R2	
Mode Register Write -1 (MRW-1)	H	L	H	H	L	L	OP7	R1	1,2,11
	L	MA0	MA1	MA2	MA3	MA4	MA5	R2	
Mode Register Write-2 (MRW-2)	H	L	H	H	L	H	OP6	R1	1,2,11
	L	OP0	OP1	OP2	OP3	OP4	OP5	R2	
Mode Register Read-1 (MRR-1)	H	L	H	H	H	L	V	R1	1,2,12
	L	MA0	MA1	MA2	MA3	MA4	MA5	R2	

	SDR Command Pins	SDR CA Pins (6)							
SDRAM Command	**CS**	**CA0**	**CA1**	**CA2**	**CA3**	**CA4**	**CA5**	**CK_t edge**	**Notes**
RFU	H	L	H	H	H	H	V	R1	1,2
	L	V						R2	
Activate -1 (ACT-1)	H	H	L	R12	R13	R14	R15	R1	1,2,3,10
	L	BA0	BA1	BA2	V	R10	R11	R2	
Activate -2 (ACT-2)	H	H	H	R6	R7	R8	R9	R1	1,10
	L	R0	R1	R2	R3	R4	R5	R2	

1. All LPDDR4 commands except for Deselect are 2 clock cycle long and defined by states of CS and CA[5:0] at the first rising edge of clock. Deselect command is 1 clock cycle long.
2. "V" means "H" or "L" (a defined logic level). "X" means don't care in which case CS, CK_t, CK_c and CA[5:0] can be floated.
3. Bank addresses BA[2:0] determine which bank is to be operated upon.
4. AB "HIGH" during Precharge or Refresh command indicates that command must be applied to all banks and bank address is a don't care.
5. Mask Write-1 command supports only BL 16. For Mark Write-1 comamnd, CA5 must be driven LOW on first rising clock cycle (R1).
6. AP "HIGH" during Write-1, Mask Write-1 or Read-1 commands indicates that an auto-precharge will occur to the bank associated with the Write, Mask Write or Read command.
7. If Burst Length on-the-fly is enabled, BL "HIGH" during Write-1 or Read-1 command indicates that Burst Length should be set on-the-Fly to BL=32. BL "LOW" during Write-1 or Read-1 command indicates that Burst Length should be set on-the-fly to BL=16. If Burst Length on-the-fly is disabled, then BL must be driven to defined logic level "H" or "L".
8. For CAS-2 commands (Write-2 or Mask Write-2 or Read-2 or MRR-2 or MPC (Only Write FIFO, Read FIFO & Read DQ Calibration), C[1:0] are not transmitted on the CA[5:0] bus and are assumed to be zero. Note that for CAS-2 Write-2 or CAS-2 Mask Write-2 command, C[3:2] must be driven LOW.
9. Write-1 or Mask Write-1 or Read-1 or Mode Register Read-1 or MPC (Only Write FIFO, Read FIFO & Read DQ Calibration) command must be immediately followed by CAS-2 command consecutively without any other command in between. Write-1 or Mask Write-1 or Read-1 or Mode Register Read-1 or MPC (Only Write FIFO, Read FIFO & Read DQ Calibration) command must be issued first before issuing CAS-2 command. MPC (Only Start & Stop DQS Oscillator, Start & Latch ZQ Calibration) commands do not require CAS-2 command; they require two additional DES or NOP commands consecutively before issuing any other commands.
10. Activate-1 command must be immediately followed by Activate-2 command consecutively without any other command in between. Activate-1 command must be issued first before issuing Activate-2 command. Once Activate-1 command is issued, Activate-2 command must be issued before issuing another Activate-1 command.
11. MRW-1 command must be immediately followed by MRW-2 command consecutively without any other command in between. MRW-1 command must be issued first before issuing MRW-2 command.
12. MRR-1 command must be immediately followed by CAS-2 command consecutively without any other command in between. MRR-1 command must be issued first before issuing CAS-2 command.

4.44 TRR Mode - Target Row Refresh

A LPDDR4 SDRAM's row has a limited number of times a given row can be accessed within a refresh period (tREFW * 2) prior to requiring adjacent rows to be refreshed. The Maximum Activate Count (MAC) is the maximum number of activates that a single row can sustain within a refresh period before the adjacent rows need to be refreshed. The row receiving the excessive actives is the Target Row (TRn), the adjacent rows to be refreshed are the victim rows. When the MAC limit is reached on TRn, either the LPDRR4 SDRAM receive all (R * 2) Refresh Commands before another row activate is issued, or the LPDRR4 SDRAM should be placed into Targeted Row Refresh (TRR) mode. The TRR Mode will re-fresh the rows adjacent to the TRn that encountered tMAC limit.

If LPDDR4 SDRAM supports Unlimited MAC value: MR24 [OP2:0=000] and MR24 [OP3=1], Target Row Refresh operation is not required. Even though LPDDR4 SDRAM allows to set MR24 [OP7=1]: TRR mode enable, in this case LPDDR4 SDRAM's behavior is vendor specific. For example, a certain LPDDR4 SDRAM may ignore MRW command for entering/exiting TRR mode or a certain SDRAM may support commands related TRR mode. See vendor device datasheets for details about TRR mode definition at supporting Unlimited MAC value case.

There could be a maximum of two target rows to a victim row in a bank. The cumulative value of the activates from the two target rows on a victim row in a bank should not exceed MAC value as well.

MR24 fields required to support the new TRR settings. Setting MR24 [OP7=1] enables TRR Mode and setting MR24 [OP7=0] disables TRR Mode. MR24 [OP6:OP4] defines which bank (BAn) the target row is located in (See 3.4.24, MR24 table for details).

The TRR mode must be disabled during initialization as well as any other LPDRR4 SDRAM calibration modes. The TRR mode is entered from a DRAM Idle State, once TRR mode has been entered, no other Mode Register commands are allowed until TRR mode is completed, except setting MR24 [OP7=0] to interrupt and reissue the TRR mode is allowed.

When enabled; TRR Mode is self-clearing; the mode will be disabled automatically after the completion of defined TRR flow; after the 3rd BAn precharge has completed plus tMRD. Optionally the TRR mode can also be exited via another MRS command at the completion of TRR by setting MR24 [OP7=0]; if the TRR is exited via another MRS command, the value written to MR24 [OP6:OP4] are don't cares.

4.44.1 TRR Mode Operation

1. The timing diagram in Figure 4.129 depicts TRR mode. The following steps must be performed when TRR mode is enabled. This mode requires all three ACT (ACT1, ACT2 and ACT3) and three corresponding PRE commands (PRE1, PRE2 and PRE3) to complete TRR mode. A Precharge All (PREA) commands issued while LPDDR4 SDRAM is in TRR mode will also perform precharge to BAn and counts towards a PREn command.

2. Prior to issuing the MRW command to enter TRR mode, the SDRAM should be in the idle state. A MRW command must be issued with MR24 [OP7=1] and MR24 [OP6:4] defining the bank in which the targeted row is located. All other MR24 bits should remain unchanged.

3. No activity is to occur in the DRAM until tMRD has been satisfied. Once tMRD has been satisfied, the only commands to BAn allowed are ACT and PRE until the TRR mode has been completed.

4. The first ACT to the BAn with the TRn address can now be applied, no other command is allowed at this point. All other banks must remain inactive from when the first BAn ACT command is issued until [(1.5 * tRAS) + tRP] is satisfied.

5. After the first ACT to the BAn with the TRn address is issued, a PRE to BAn is to be issued (1.5 * tRAS) later; and then followed tRP later by the second ACT to the BAn with the TRn address. Once the 2nd activate to the BAn is issued, nonBAn banks are allowed to have activity.

6. After the second ACT to the BAn with the TRn address is issued, a PRE to BAn is to be issued tRAS later and then followed tRP later by the third ACT to the BAn with the TRn address.

7. After the third ACT to the BAn with the TRn address is issued, a PRE to BAn would be issued tRAS later; and once the third PRE has been issued, nonBAn banks are not allowed to have activity until TRR mode is exited. The TRR mode is completed once tRP plus tMRD is satisfied.

8. TRR mode must be completed as specified to guarantee that adjacent rows are refreshed. Any-time the TRR mode is interrupted and not completed, the interrupted TRR Mode must be cleared and then subsequently performed again. To clear an interrupted TRR mode, an MR24 change is required with setting MR24 [OP7=0], MR24 [OP6:4] are don't care, followed by three PRE to BAn, tRP time in between each PRE command. The complete TRR sequence (Steps 2-7) must be then re-issued and completed to guarantee that the adjacent rows are refreshed.

9. Refresh command to the LPDRR4 SDRAM or entering Self-Refresh mode is not allowed while the DRAM is in TRR mode.

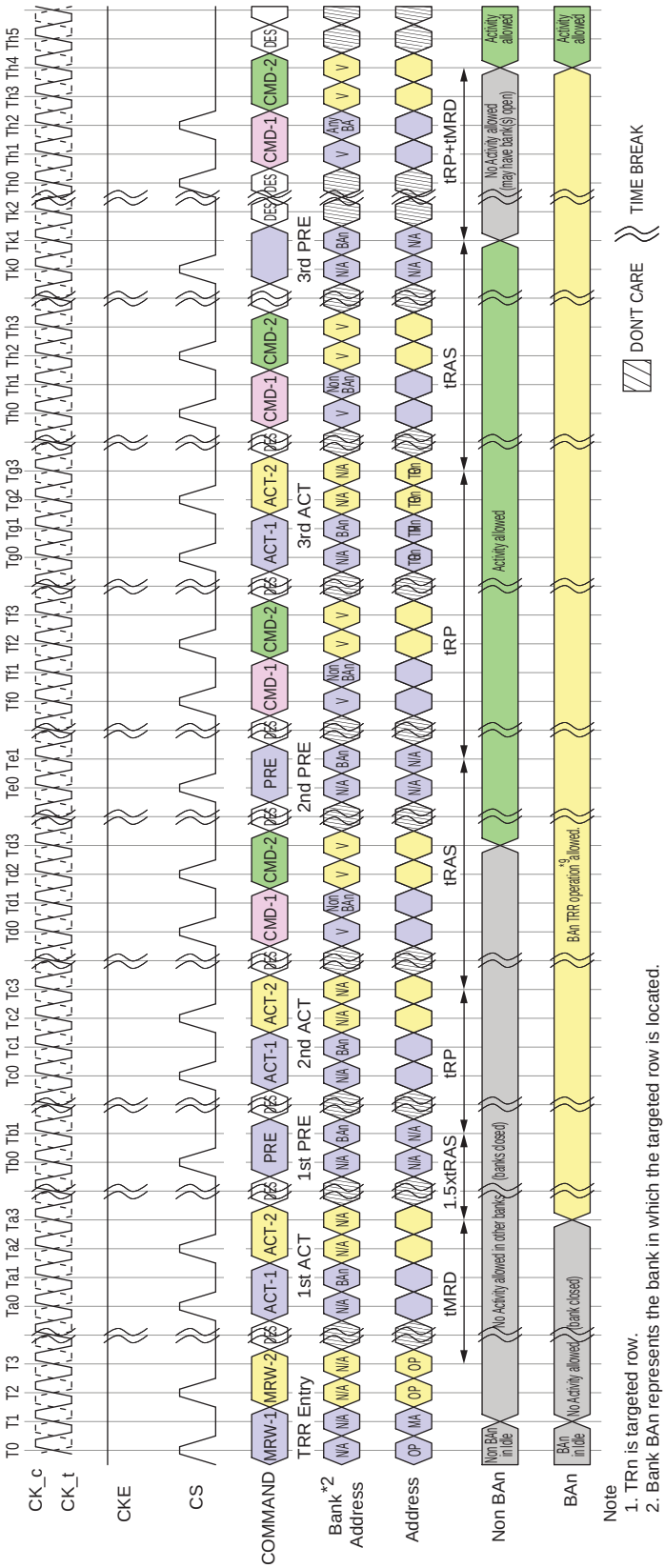

Note

1. TRn is targeted row.
2. Bank BAn represents the bank in which the targeted row is located.
3. TRR mode self-clears after tMRD + tRP measured from 3rd BAn precharge PRE3 at clock edge Th4.
4. TRR mode or any other activity can be re-engaged after tRP + tMRD from 3rd BAn precharge PRE3.
   PRE_ALL also counts if issued instead of PREn. TRR mode is cleared by DRAM after PRE3 to the BAn bank.
5. Activate commands to BAn during TRR mode do not provide refreshing support, i.e. the Refresh counter is unaffected.
6. The DRAM must restore the degraded row(s) caused by excessive activation of the targeted row (TRn) neccessary to meet refresh requirements.
7. A new TRR mode must wait tMRD+tRP time after the third precharge.
8. BAn may not be used with any other command.
9. ACT and PRE are the only allowed commands to BAn during TRR Mode.
10. Refresh commands are not allowed during TRR mode.
11. All DRAM timings are to be met by DRAM during TRR mode such as tFAW. Issuing of ACT1, ACT2 and ACT3 counts towards tFAW budget.

Figure 4.129 — TRR Mode

4.45 Post Package Repair (PPR)

LPDDR4 supports Fail Row address repair as optional feature and it is readable through MR25 OP[7:0] PPR provides simple and easy repair method in the system and Fail Row address can be repaired by the electrical programming of Electrical-fuse scheme.

With PPR, LPDDR4 can correct 1Row per Bank.

Electrical-fuse cannot be switched back to un-fused states once it is programmed. The controller should prevent unintended the PPR mode entry and repair.

4.45.1 Fail Row Address Repair

The following is procedure of PPR.

1. Before entering 'PPR' mode, All banks must be Precharged
2. Enable PPR using MR4 bit "OP4=1" and wait tMRD
3. Issue ACT command with Fail Row address
4. Wait tPGM to allow DRAM to repair target Row Address internally then issue PRE
5. Wait tPGM_Exit after PRE to allow DRAM to recognize the repaired Row address RAn
6. Exit PPR with setting MR4 bit "OP4=0"
7. Issue RESET command after tPGMPST
8. Repeat steps in '3.3.2 Reset Initialization with Stable Power' section
9. In case there is more than one failed address to repair, Repeat Steps 2 to 8

Once PPR mode is exited, to confirm if target row is repaired correctly, host can verify by writing data into the target row and reading it back after PPR exit with MR4 [OP4=0] and tPGMPST.

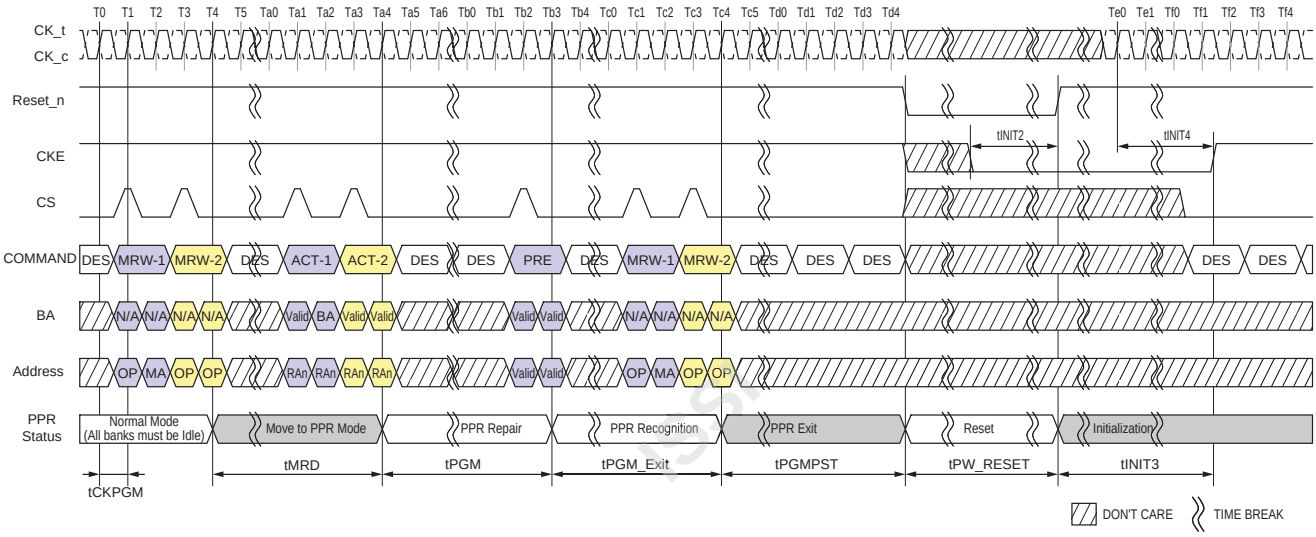

NOTE 1 During tPGM, any other commands (including refresh) are not allowed on each die.
NOTE 2 With one PPR command, only one row can be repaired at one time per die.
NOTE 3 RESET command is required at the end of every PPR procedure.
NOTE 4 During PPR, memory contents is not refreshed and may be lost.
NOTE 5 Assert Reset_n below 0.2 X V_{DD2}. Reset_n needs to be maintained LOW for minimum tPW_RESET. CKE must be pulled LOW at least 10ns before deassserting Reset_n.
NOTE 6 After RESET command, follow steps 4 to 10 in 'Voltage Ramp and Device Initialization' section.

Figure 4.130 — PPR Timing

Table 4.69 — PPR Timing Parameters

Parameter	Symbol	min	max	Unit	Note
PPR Programming Time	tPGM	1000	-	ms	
PPR Exit Time	tPGM_Exit	15	-	ns	
New Address Setting time	tPGMPST	50	-	us	
PPR Programming Clock	tCKPGM	1.25	-	ns	

4.46 WRITE and MASKED WRITE Operation DQS Control (WDQS Control)

The device supports WRITE and MASKED WRITE operations with the following DQS controls. Before and after WRITE and MASKED WRITE operations, DQS_t, and DQS_c are required to have sufficient voltage gap to make sure the write buffers operating normally without any risk of meta-stability.

The device is supported by either of the two WDQS control modes below.

- Mode 1: Read based control
- Mode 2: WDQS_on / WDQS_off definition based control

Regardless of ODT enable/disable, WDQS related timing described here does not allow any change of existing command timing constraints for all READ/WRITE operations. In case of any conflict or ambiguity on the command timing constraints caused by the specification here, the specification defined in the Timing Constraints for Training Commands table should have higher priority than WDQS control requirements.

In order to prevent write preamble related failure, it is strongly recommended to support either of the two WDQS controls to the device.

WDQS Control Mode 1 – Read-Based Control

The device needs to be guaranteed the differential WDQS, but the differential WDQS can be controlled as described below. WDQS control requirements here can be ignored while differential read DQS is operated or while DQS hands over from read to write or vice versa.

1. When WRITE/MASKED WRITE command is issued, SoC makes the transition from driving DQS_c HIGH to driving differential DQS_t/DQS_c, followed by normal differential burst on DQS pins.
2. At the end of post amble of WRITE/MASKED WRITE burst, SoC resumes driving DQS_c HIGH through the subsequent states except for DQS toggling and DQS turn around time of WT-RD and RD-WT as long as CKE is HIGH.
3. When CKE is LOW, the state of DQS_t/DQS_c is allowed to be “Don’t Care.”

Figure 4.131: WDQS Control Mode 1

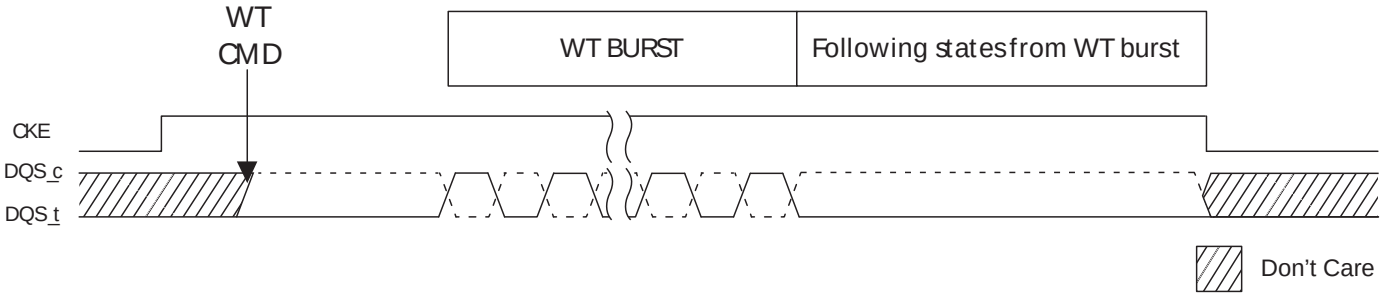

WDQS Control Mode 2 – WDQS_On/Off

After WRITE/MASKED WRITE command is issued, DQS_t and DQS_c required to be differential from WDQS_on, and DQS_t and DQS_c can be “Don’t Care” status from WDQS_off of WRITE/MASKED WRITE command. When ODT is enabled, WDQS_on and WDQS_off timing is located in the middle of the operations. When host disables

ODT, WDQS_on and WDQS_off constraints conflict with ^{t}RTW. The timing does not conflict when ODT is enabled because WDQS_on and WDQS_off timing is covered in ODTLon and ODTLoff. However, regardless of ODT on/off, WDQS_on/off timing below does not change any command timing constraints for all read and write operations. In order to prevent the conflict, WDQS_on/off requirement can be ignored where WDQS_on/off timing is overlapped with read operation period including READ burst period and ^{t}RPST or overlapped with turn-around time (RD-WT or WT-RD). In addition, the period during DQS toggling caused by read and write can be counted as WDQS_on/off.

Parameters

- WDQS_on: The maximum delay from WRITE/MASKED WRITE command to differential DQS_t and DQS_c
- WDQS_off: The minimum delay for DQS_t and DQS_c differential input after the last WRITE/MASKED WRITE command
- WDQS_Exception: The period where WDQS_on and WDQS_off timing is overlapped with READ operation or with DQS turn around (RD-WT, WT-RD)
  - WDQS_Exception @ ODT disable = MAX(WL-WDQS_on +^{t}DQSTA - ^{t}WPRE -*n* ^{t}CK, 0 ^{t}CK) where RD to WT command gap = ^{t}RTW(MIN)@ODT disable + *n* ^{t}CK
  - WDQS_Exception @ ODT enable =^{t}DQSTA

Table 4.70: WDQS_On/WDQS_Off Definition

WRITE Latency				WDQS_On (Max)		WDQS_Off (Min)		Lower Frequency Limit (>)	Upper Frequency Limit (≤)
Set A	Set B	*n*WR	*n*RTP	Set A	Set B	Set A	Set B		
4	4	6	8	0	0	15	15	10	266
6	8	10	8	0	0	18	20	266	533
8	12	16	8	0	6	21	25	533	800
10	18	20	8	4	12	24	32	800	1066
12	22	24	10	4	14	27	37	1066	1333
14	26	30	12	6	18	30	42	1333	1600
16	30	34	14	6	20	33	47	1600	1866
18	34	40	16	8	24	36	52	1866	2133

Notes:
1. WDQS_on/off requirement can be ignored when WDQS_on/off timing is overlapped with READ operation period including READ burst period and ^{t}RPST or overlapped with turn-around time (RD-WT or WT-RD).
2. DQS toggling period caused by read and write can be counted as WDQS_on/off.

Table 4.71: WDQS_On/WDQS_Off Allowable Variation Range

	Min	Max	Unit
WDQS_on	–0.25	0.25	^{t}CK(avg)
WDQS_off	–0.25	0.25	^{t}CK(avg)

Table 4.72: DQS Turn-Around Parameter

Parameter	Description	Value	Unit	Note
^{t}DQSTA	Turn-around time RDQS to WDQS for WDQS control case	TBD	–	1

Note: 1. ^{t}DQSTA is only applied to WDQS_exception case when WDQS Control. Except for WDQS Control, ^{t}DQSTA can be ignored.

Figure 4.132: Burst WRITE Operation

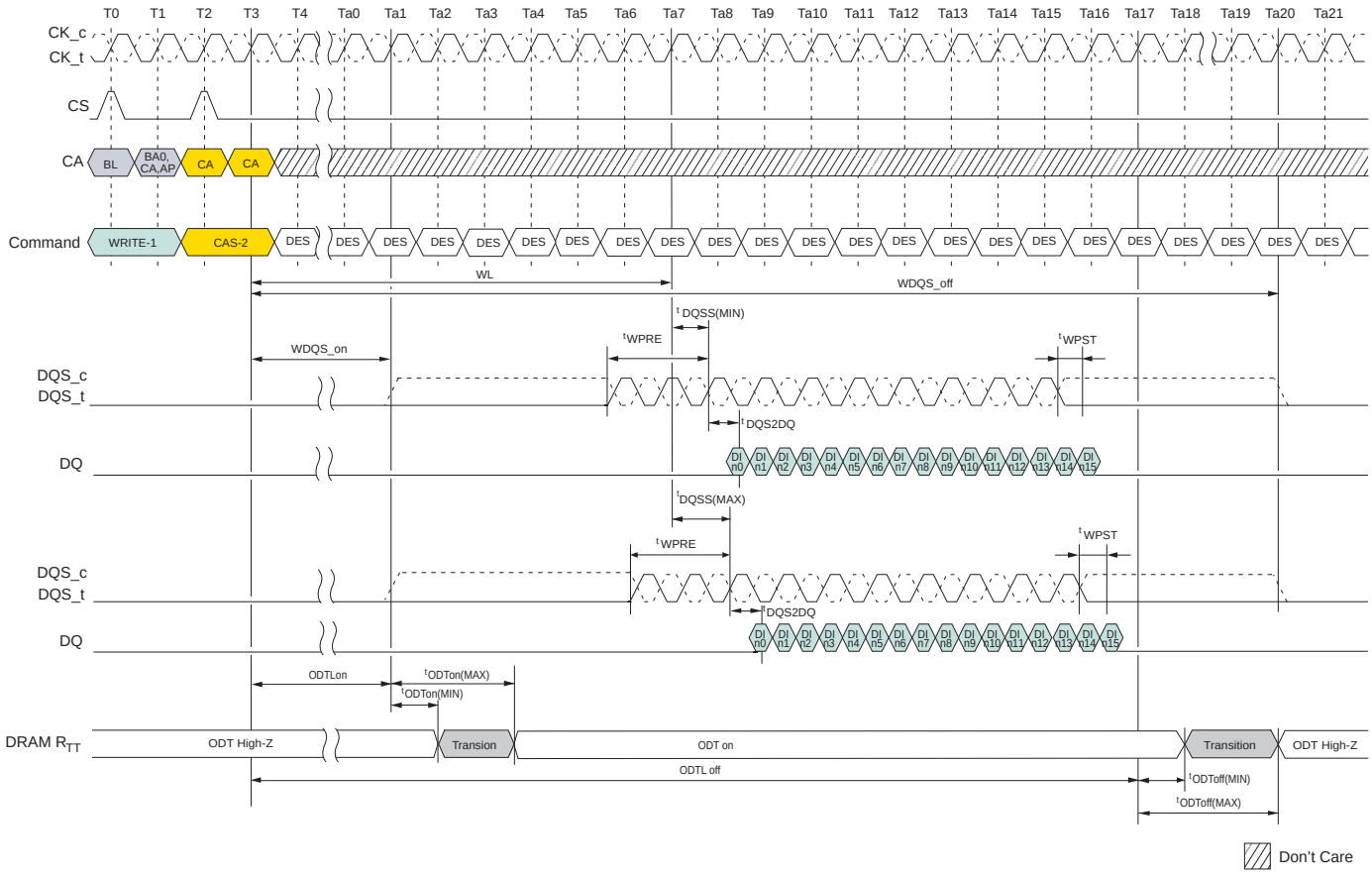

Notes:
1. BL=16, Write postamble = 0.5 *n*CK, DQ/DQS: V_{SSQ} termination.
2. DI *n* = data-in to column *n*.
3. DES commands are shown for ease of illustration; other commands may be valid at these times.
4. DRAM R_{TT} is only applied when ODT is enabled (MR11 OP[2:0] is not 000b).

Figure 4.133: Burst READ Followed by Burst WRITE or Burst MASKED WRITE (ODT Disable)

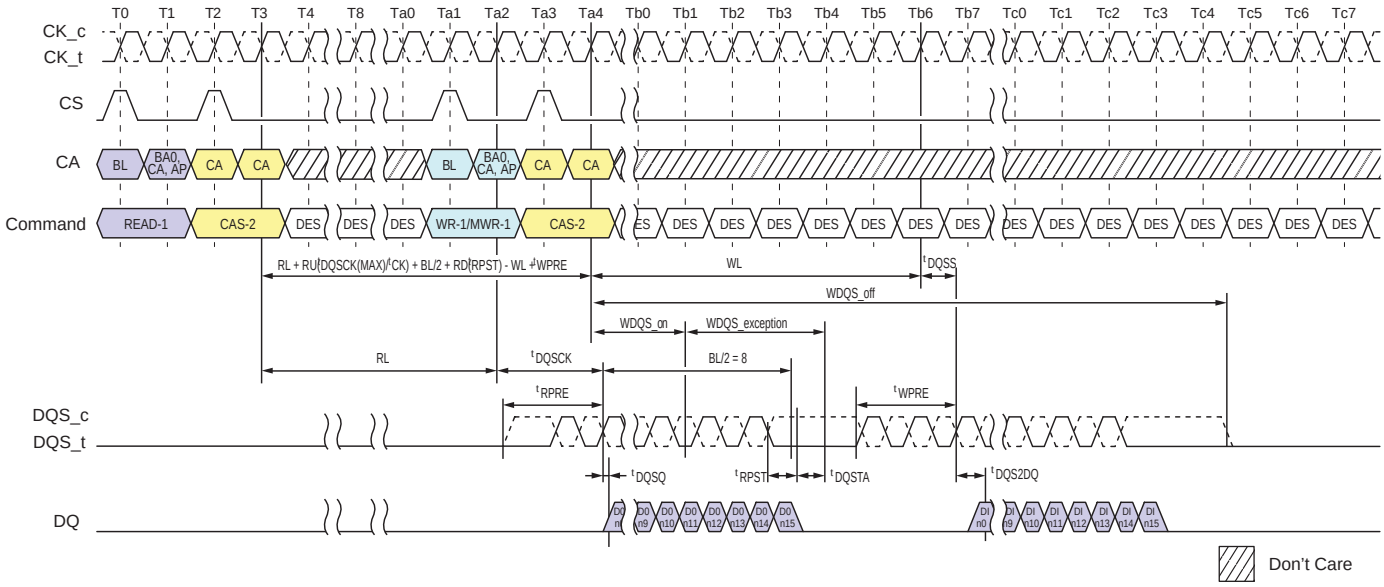

Notes:
1. BL = 16, Read preamble = Toggle, Read postamble = 0.5 *n*CK, Write preamble = 2 *n*CK, Write postamble = 0.5 *n*CK.
2. DO *n* = data-out from column *n*, DI *n* = data-in to column *n*.
3. DES commands are shown for ease of illustration; other commands may be valid at these times.
4. WDQS_on and WDQS_off requirement can be ignored where WDQS_on/off timing is overlapped with READ operation period including READ burst period and ^{t}RPST or overlapped with turn-around time (RD-WT or WT-RD).

5 Absolute Maximum DC Ratings

Stresses greater than those listed may cause permanent damage to the device.
This is a stress rating only, and functional operation of the device at these or any other conditions above those indicated in the operational sections of this specification is not implied. Exposure to absolute maximum rating conditions for extended periods may affect reliability.

Table 5.1 — Absolute Maximum DC Ratings

Parameter	Symbol	Min	Max	Units	Notes
V_{DD1} supply voltage relative to V_{SS}	V_{DD1}	-0.4	2.1	V	1
V_{DD2} supply voltage relative to V_{SS}	V_{DD2}	-0.4	1.5	V	1
V_{DDQ} supply voltage relative to V_{SSQ}	V_{DDQ}	-0.4	1.5	V	1
Voltage on any ball except V_{DD1} relative to V_{SS}	VIN, VOUT	-0.4	1.5	V	
Storage Temperature	TSTG	-55	125	°C	2

Notes:
1. See "Power-Ramp" in 3.3 for relationships between power supplies.
2. Storage Temperature is the case surface temperature on the center/top side of the LPDDR4 device. For the measurement conditions, please refer to JESD51-2.

6 AC and DC Operating Conditions

6.1 Recommended DC Operating Conditions

Table 6.1 — Recommended DC Operating Conditions

DRAM	Symbol	Min	Typ	Max	Unit	Notes
Core 1 Power	VDD1	1.70	1.80	1.95	V	1,2
Core 2 Power/Input Buffer Power	VDD2	1.06	1.10	1.17	V	1,2,3
I/O Buffer Power (LPDDR4)	VDDQ	1.06	1.10	1.17	V	2,3
I/O Buffer Power (LPDDR4X)	VDDQ	0.57	0.6	0.65	V	2,3

Notes:
1. VDD1 uses significantly less current than VDD2.
2. The voltage range is for DC voltage only. DC is defined as the voltage supplied at the DRAM and is inclusive of all noise up to 20MHz at the DRAM package ball.
3. The voltage noise tolerance from DC to 20MHz exceeding a pk-pk tolerance of 45mV at the DRAM ball is not included in the TdIVW.

6.2 Input Leakage Current

Table 6.2 — Input Leakage Current

Parameter/Condition	Symbol	Min	Max	Unit	Notes
Input Leakage current	I_L	-4	4	uA	1,2

Notes:
1. For CK_t, CK_c, CKE, CS, CA, ODT_CA and RESET_n. Any input 0V ≤ V_{IN} ≤ VDD2 (All other pins not under test = 0V).
2. CA ODT is disabled for CK_t, CK_c, CS, and CA.

6.3 Input/Output Leakage Current

Table 6.3 — Input/Output Leakage Current

Parameter/Condition	Symbol	Min	Max	Unit	Notes
Input/Output Leakage current	I_{OZ}	-5	5	uA	1,2

Notes:
1. For DQ, DQS_t, DQS_c and DMI. Any I/O 0V ≤ V_{OUT} ≤ VDDQ.
2. I/Os status are disabled: High Impedance and ODT Off.

6.4 Operating Temperature Range

Table 6.4 — Operating Temperature Range

Parameter/Condition	Symbol	Min	Max	Unit
Industrial or Automotive, A1	T_{OPER}	-40	95	°C
Automotive, A2		-40	105	°C
Automotive, A25		-40	115	°C
Automotive, A3		-40	125	°C

Notes:
1. Operating Temperature is the case surface temper ature on the center-top side of the LPDDR4 device. For the measurement conditions, please refer to JESD51-2. See MR4 Register Information, and Refresh Requirement Parameters (4.17.1)
2. The Standard Temperature Range is between -40ºC and 85ºC case temperature. The Elevated Temperature Range is between 85ºC and 105ºC case temperature. Derating or timing modification may be necessary to operate in Elevated or higher temperature.
3. Either the device case temperature rating or the temperature sensor (see 4.34) may be used to set an appropriate refresh rate, determine the need for AC timing de-rating and/or monitor the operating temperature. When using the temperature sensor, the actual device case temperature may be higher than the T_{OPER} rating that applies for the Standard or Elevated Temperature Ranges. For example, T_{CASE} may be above 85°C when the temperature sensor indicates a temperature of less than 85°C.

6.5 Thermal Resistance

Table 6.5 - Thermal Resistance

Package	Package Thickness	Theta-ja (Airflow = 0m/s)	Theta-ja (Airflow = 1m/s)	Theta-ja (Airflow = 2m/s)	Theta-jc	Unit
200-ball BGA	1.2mm	20.1	14.5	13.7	3.6	ºC/W
200-ball BGA	1.1mm	27.9	23.3	21.4	4.1	ºC/W

NOTE: Follows method defined by JESD51, with 4-layer substrate.

7 AC and DC Input/Output Measurement levels

7.1 1.1 V High speed LVCMOS (HS_LLVCMOS)

This section defines power supply voltage range, dc interface, switching parameter and overshoot/ undershoot for high speed lower low-voltage CMOS family of non terminated digital circuits. The specifications in this section represent a minimum set of interface specifications for CMOS compatible circuits. The purpose of this section is to provide a standard of specification for uniformity, multiplicity of sources, elimination of confusion, and ease of device specification and design by users.

7.1.1 Standard specifications

All voltages are referenced to ground except where noted.

7.1.2 Input Levels for CKE

Table 7.1 — Input Levels for CKE

Parameter	Symbol	Min	Max	Unit	Note
Input high level (AC)	VIH(AC)	$0.75*V_{DD}$(or V_{DDQ})	V_{DD}(or V_{DDQ})+0.2	V	1
Input low level (AC)	VIL(AC)	-0.2	$0.25*V_{DD}$(or V_{DDQ})	V	1
Input high level (DC)	VIH(DC)	$0.65*V_{DD}$(or V_{DDQ})	V_{DD}(or V_{DDQ})+0.2	V	
Input low level (DC)	VIL(DC)	-0.2	$0.35*V_{DD}$(or V_{DDQ})	V	

Notes:
1. See the AC Over/Undershoot section

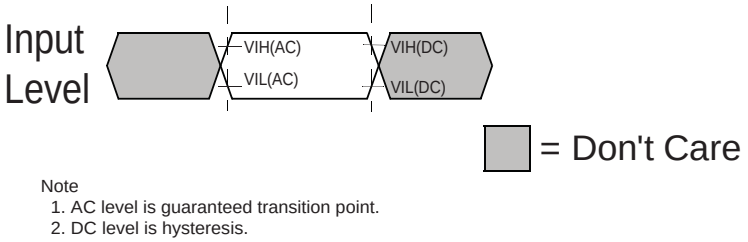

Note
1. AC level is guaranteed transition point.
2. DC level is hysteresis.

Figure 7.1 — Input Timing Definition for CKE

7.1.3 Input Levels for Reset_n and ODT_CA

This definition applies to Reset_n and ODT_CA. Table 7.2 provides the input level; Figure 7.2 shows the timing.

Table 7.2 — Input Level for Reset_n and ODT_CA

Parameter	Symbol	Min	Max	Unit	Note
Input high level	VIH	$0.80*V_{DD2}$	$V_{DD2}+0.2$	V	1
Input low level	VIL	-0.2	$0.20*V_{DD2}$	V	1
NOTE 1 Refer LPDDR4 AC Over/Undershoot section.					

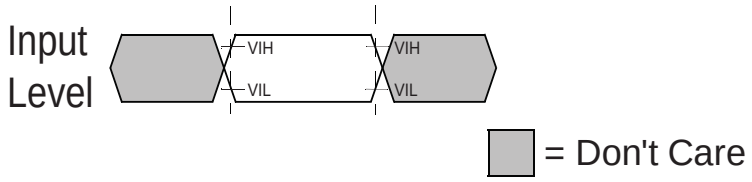

Figure 7.2 — Input AC timing definition for Reset_n and ODT_CA

7.1.4 AC Over/Undershoot

7.1.4.1 LPDDR4 AC Over/Undershoot

Table 7.3 — LPDDR4 AC Over/Undershoot

Parameter	Specification
Maximum peak Amplitude allowed for overshoot area	0.35V
Maximum peak Amplitude allowed for undershoot area	0.35V
Maximum overshoot area above V_{DD}/V_{DDQ}	0.8V-ns
Maximum undershoot area below V_{SS}/V_{SSQ}	0.8V-ns

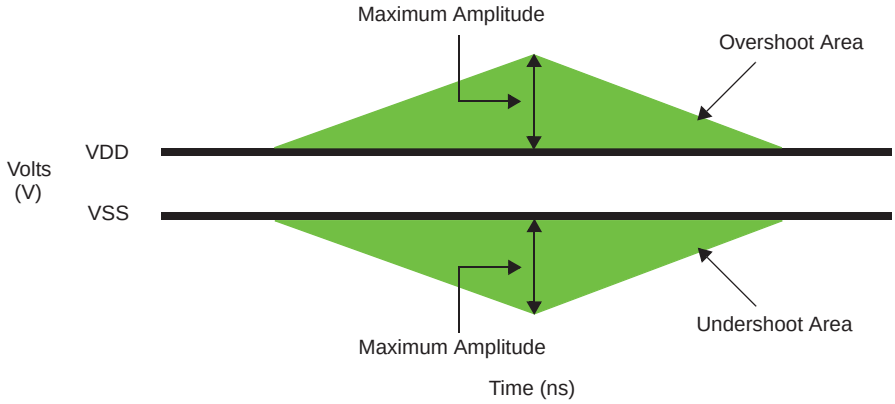

Figure 7.3 — AC Overshoot and Undershoot Definition for Address and Control Pins

7.2 Differential Input Voltage

7.2.1 Differential Input Voltage for CK

The minimum input voltage need to satisfy both Vindiff_CK and Vindiff_CK /2 specification at input receiver and their measurement period is 1tCK. Vindiff_CK is the peak to peak voltage centered on 0 volts differential and Vindiff_CK /2 is max and min peak voltage from 0V.

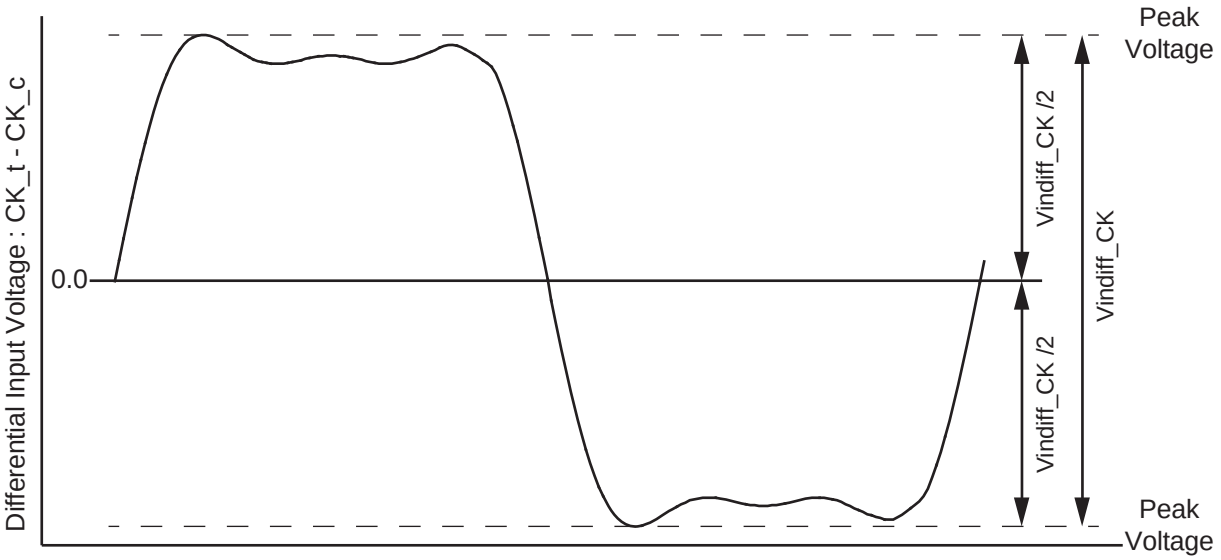

Figure 7.4 — CK Differential Input Voltage

Table 7.4 — CK differential input voltage

Parameter	Symbol	Data Rate						Unit	Note
		1600/1867[a]		2133/2400/3200		3733/4266			
		Min	Max	Min	Max	Min	Max		
CK differential input voltage	Vindiff_CK	420	-	380	-	360	-	mV	1

Note:

1. The peak voltage of Differential CK signals is calculated in a following equation.
   Vindiff_CK = (Max Peak Voltage) - (Min Peak Voltage)
   Max Peak Voltage = Max(f(t))
   Min Peak Voltage = Min(f(t))
   f(t) = VCK_t - VCK_c

a. The following requirements apply for DQ operating frequencies at or below 1333Gbps for all speed bins for the first column 1600/1867.

7.2.2 Peak voltage calculation method

The peak voltage of Differential Clock signals are calculated in the following equation (see Figure 7.5).

VIH.DIFF.Peak Voltage = Max(f(t))
VIL.DIFF.Peak Voltage = Min(f(t))
f(t) = VCK_t - VCK_c

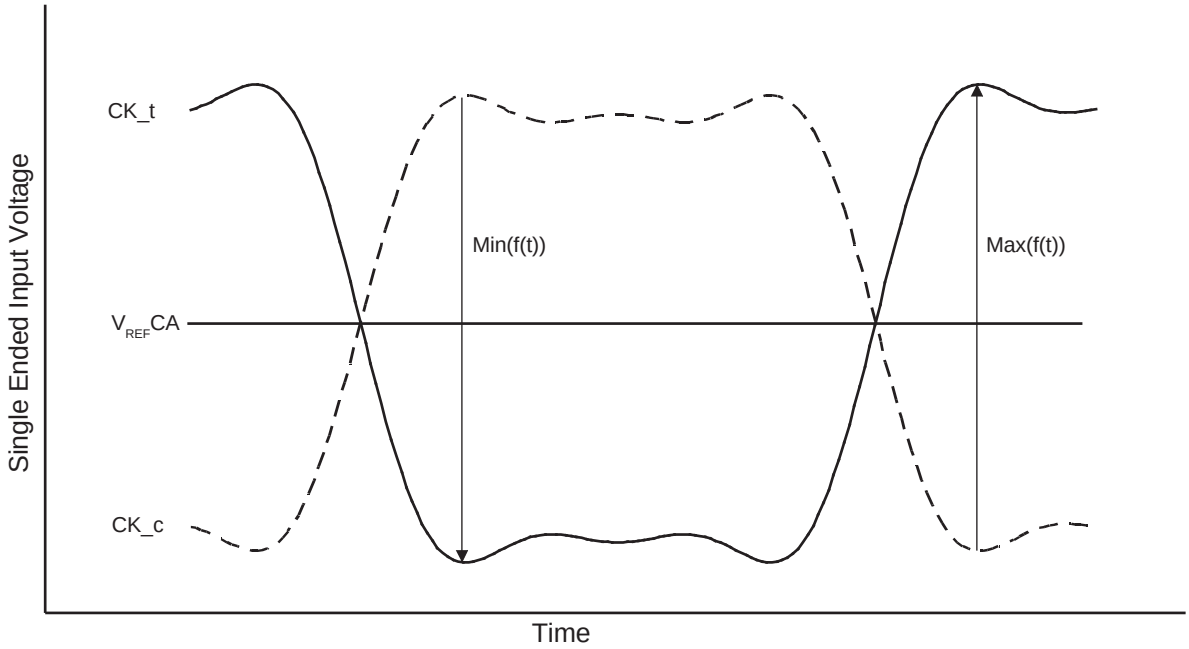

NOTES : 1. V_{REF}CA is LPDDR4 SDRAM internal setting value by V_{REF} Training.

Figure 7.5 — Definition of differential Clock Peak Voltage

7.2.3 Single-Ended Input Voltage for Clock

The minimum input voltage needs to satisfy both Vinse_CK, Vinse_CK_High/Low specification at input receiver. (See Figure 7.6 and Table 7.5.)

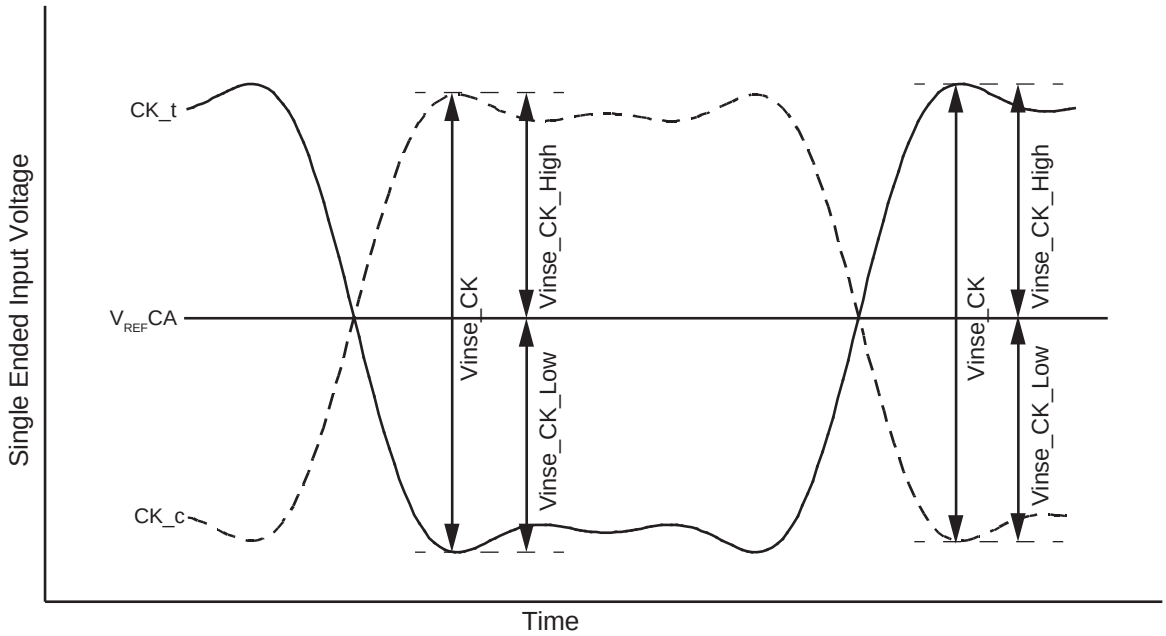

NOTES : 1. V_{REF}CA is LPDDR4 SDRAM internal setting value by V_{REF} Training.

Figure 7.6 — Clock Single-Ended Input Voltage

Table 7.5 — Clock Single-Ended input voltage

Parameter	Symbol	Data Rate						Unit	Note
		1600/1867[a]		2133/2400/3200		3733/4266			
		Min	Max	Min	Max	Min	Max		
Clock Single-Ended input voltage	Vinse_CK	210	-	190	-	180	-	mV	
Clock Single-Ended input voltage High from V_{REF}CA	Vinse_CK_High	105	-	95	-	90	-	mV	
Clock Single-Ended input voltage Low from V_{REF}CA	Vinse_CK_Low	105	-	95	-	90	-	mV	

a. The following requirements apply for DQ operating frequencies at or below 1333Gbps for all speed bins for the first column 1600/1867.

7.2.4 Differential Input Slew Rate Definition for Clock

Input slew rate for differential signals (CK_t, CK_c) are defined and measured as shown in Figure 7.7 and Tables 7.6 through 7.8.

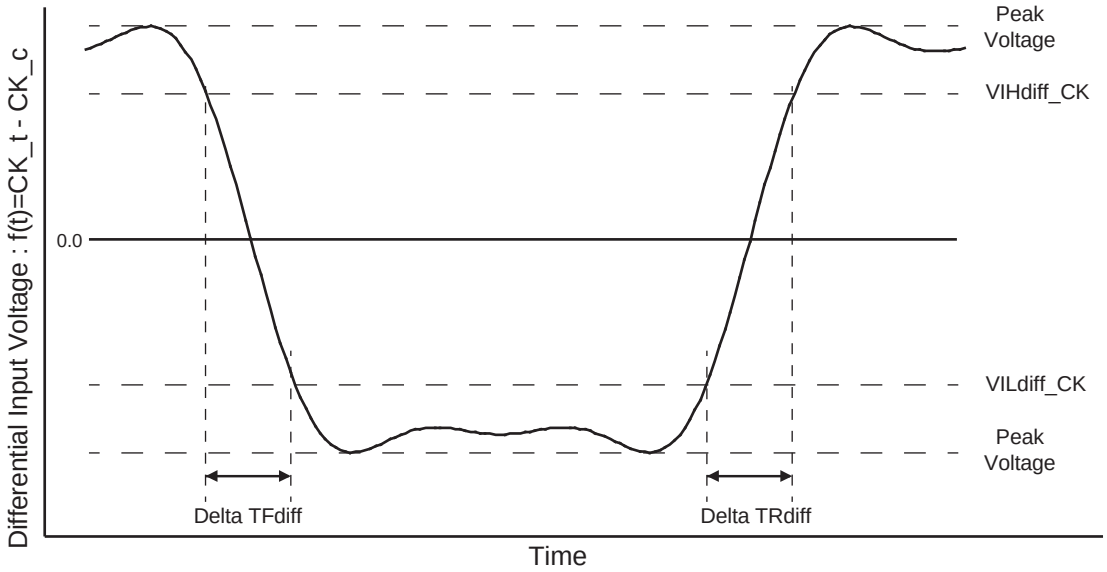

NOTES : 1. Differential signal rising edge from VILdiff_CK to VIHdiff_CK must be monotonic slope.
2. Differential signal falling edge from VIHdiff_CK to VILdiff_CK must be monotonic slope.

Figure 7.7 — Differential Input Slew Rate Definition for CK_t, CK_c

Table 7.6 — Differential Input Slew Rate Definition for CK_t, CK_c

Description	From	To	Defined by
Differential input slew rate for rising edge(CK_t - CK_c)	VILdiff_CK	VIHdiff_CK	|VILdiff_CK - VIHdiff_CK|/DeltaTRdiff
Differential input slew rate for falling edge(CK_t - CK_c)	VIHdiff_CK	VILdiff_CK	|VILdiff_CK - VIHdiff_CK|/DeltaTFdiff

Table 7.7 — Differential Input Level for CK_t, CK_c

Parameter	Symbol	Data Rate						Unit	Note
		1600/1867		2133/2400/3200		3733/4266			
		Min	Max	Min	Max	Min	Max		
Differential Input High	VIHdiff_CK	175	-	155	-	145	-	mV	1
Differential Input Low	VILdiff_CK	-	-175	-	-155	-	-145	mV	1
NOTE 1 These requirements apply for DQ operating frequencies at or below 1333Mbps for all speed bins for the first column, 1600/1867.									

Table 7.8 — Differential Input Slew Rate for CK_t, CK_c

Parameter	Symbol	Data Rate						Unit	Note
		1600/1867[a]		2133/2400/3200		3733/4266			
		Min	Max	Min	Max	Min	Max		
Differential Input Slew Rate for Clock	SRIdiff_CK	2	14	2	14	2	14	V/ns	

7.2.5 Differential Input Cross Point Voltage

The cross point voltage of differential input signals (CK_t, CK_c) are shown in Figure 7.8 and must meet the requirements in Table 7.9. The differential input cross point voltage VIX is measured from the actual cross point of true and complement signals to the mid level.

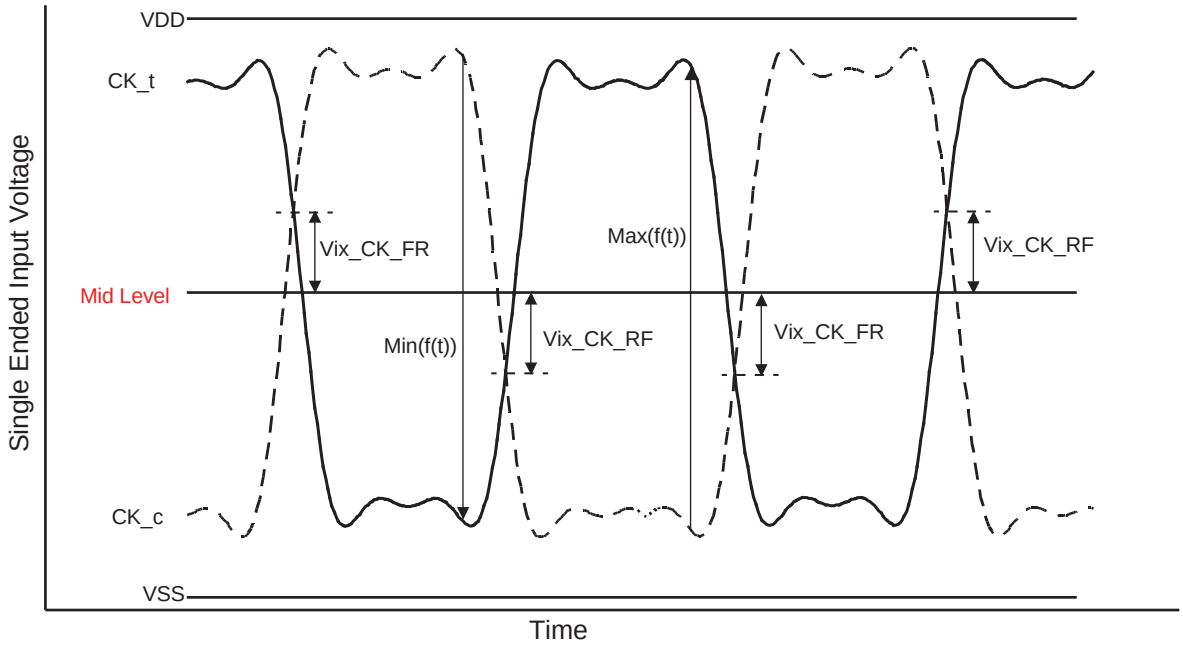

NOTES : 1. The base level of Vix_CK_FR/RF is V_{REF}CA that is LPDDR4 SDRAM internal setting value by V_{REF} Training.

Figure 7.8 — Vix Definition (Clock)

Table 7.9 — Cross point voltage for differential input signals (Clock)

Parameter	Symbol	Data Rate						Unit	Note
		1600/1867		2133/2400/3200		3733/4266			
		Min	Max	Min	Max	Min	Max		
Clock Differential input cross point voltage ratio	Vix_CK_ratio	-	25	-	25	-	25	%	1,2,**3**,4,5

NOTE 1 These requirements apply for DQ operating frequencies at or below 1333Mbps for all speed bins for the first column,1600/1867.
NOTE 2 Vix_CK_Ratio is defined by this equation: Vix_CK_Ratio = Vix_CK_FR/|Min(f(t))|
NOTE 3 Vix_CK_Ratio is defined by this equation: Vix_CK_Ratio = Vix_CK_RF/Max(f(t))
NOTE 4 Vix_CK_FR is defined as delta between cross point (CK_t fall, CK_c rise) to Min(f(t))/2.
Vix_CK_RF is defined as delta between cross point (CK_t rise, CK_c fall) to Max(f(t))/2.
NOTE 5 In LPDDR4X un-terminated case, CK mid-level is calculated as:
High level＝VDDQ, Low level=VSS, Mid-level = VDDQ/2.
In LPDDR4 un-terminated case, Mid-level must be equal or lower than 369mV (33.6% of VDD2).

7.2.2 Differential Input Voltage for DQS

The minimum input voltage need to satisfy both Vindiff_DQS and Vindiff_DQS /2 specification at input receiver and their measurement period is 1UI(tCK/2). Vindiff_DQS is the peak to peak voltage centered on 0 volts differential and Vindiff_DQS /2 is max and min peak voltage from 0V.

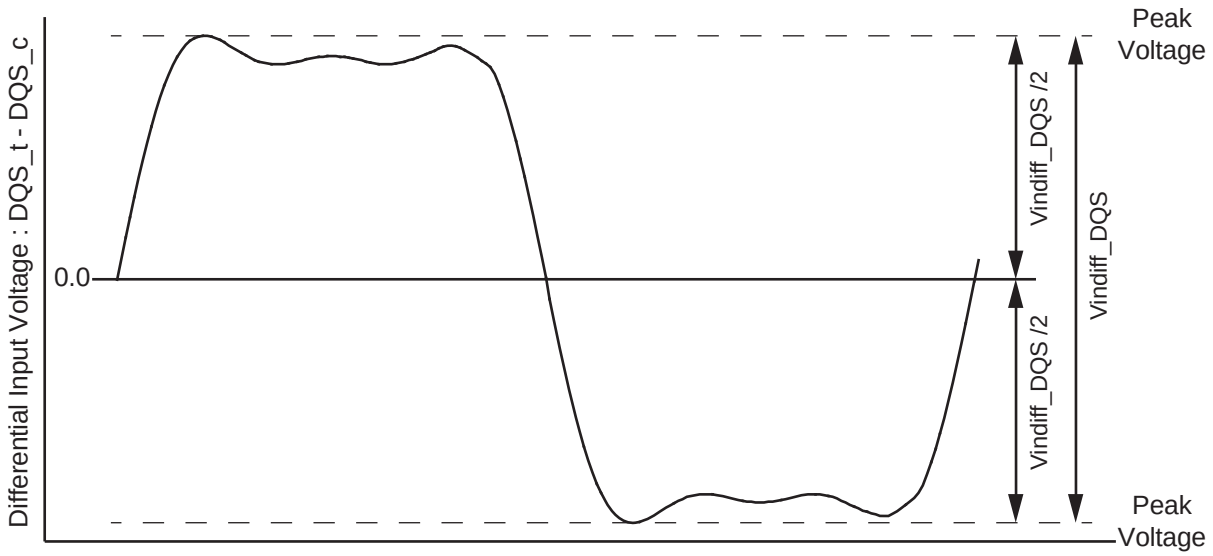

Figure 7.9 — DQS Differential Input Voltage

Table 7.10 — DQS differential input voltage

Parameter	Symbol	Data Rate						Unit	Note
		1600/1867		2133/2400/3200		3733/4266			
		Min	Max	Min	Max	Min	Max		
DQS differential input	Vindiff_DQS	360	-	360	-	340	-	mV	1,2

NOTE 1 These requirements apply for DQ operating frequencies at or below 1333Mbps for all speed bins for the first column,1600/1867.

NOTE 2 The peak voltage of Differential DQS signals is calculated in a following equation.
Vindiff_DQS = (Max Peak Voltage) - (Min Peak Voltage)
Max Peak Voltage = Max(f(t))
Min Peak Voltage = Min(f(t))
f(t) = VDQS_t - VDQS_c

7.2.7 Peak voltage calculation method

The peak voltage of Differential DQS signals, shown in Figure 7.10, are calculated in a following equation.

VIH.DIFF.Peak Voltage = Max(f(t))
VIL.DIFF.Peak Voltage = Min(f(t))
f(t) = VDQS_t - VDQS_c

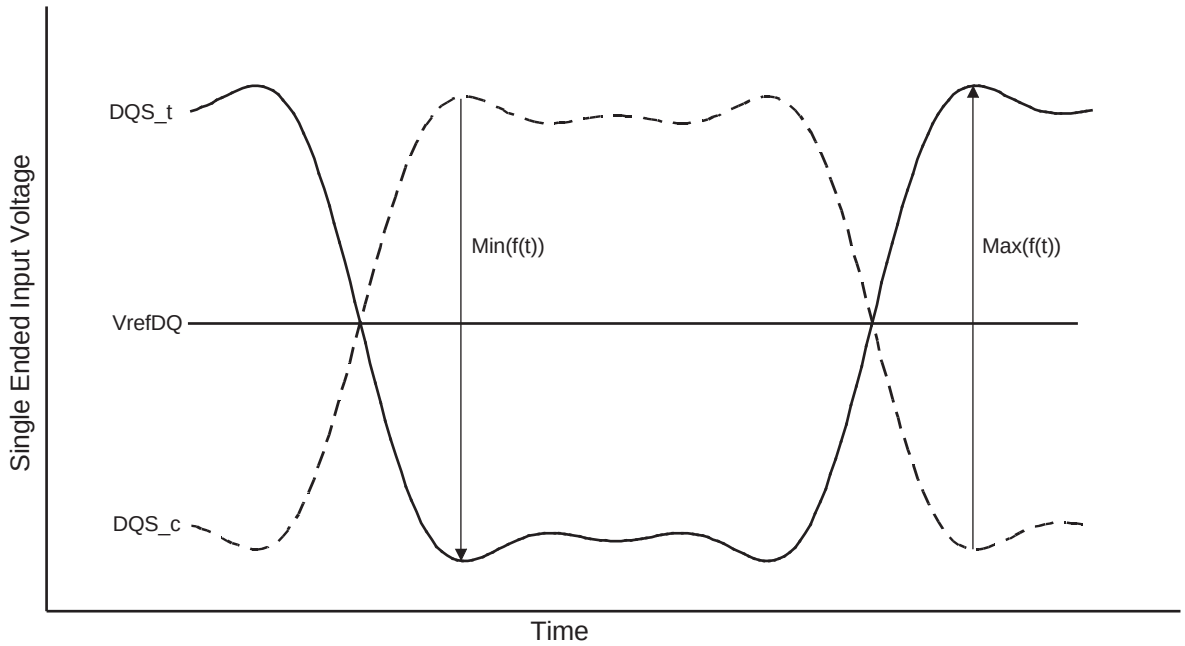

NOTES : 1. VrefDQ is LPDDR4 SDRAM internal setting value by Vref Training.

Figure 7.10 — Definition of differential DQS Peak Voltage

7.2.8 Single-Ended Input Voltage for DQS

The minimum input voltage need to satisfy both Vinse_DQS, Vinse_DQS_High/Low specification at input receiver, as shown in Figure 7.11 and Table 7.11.

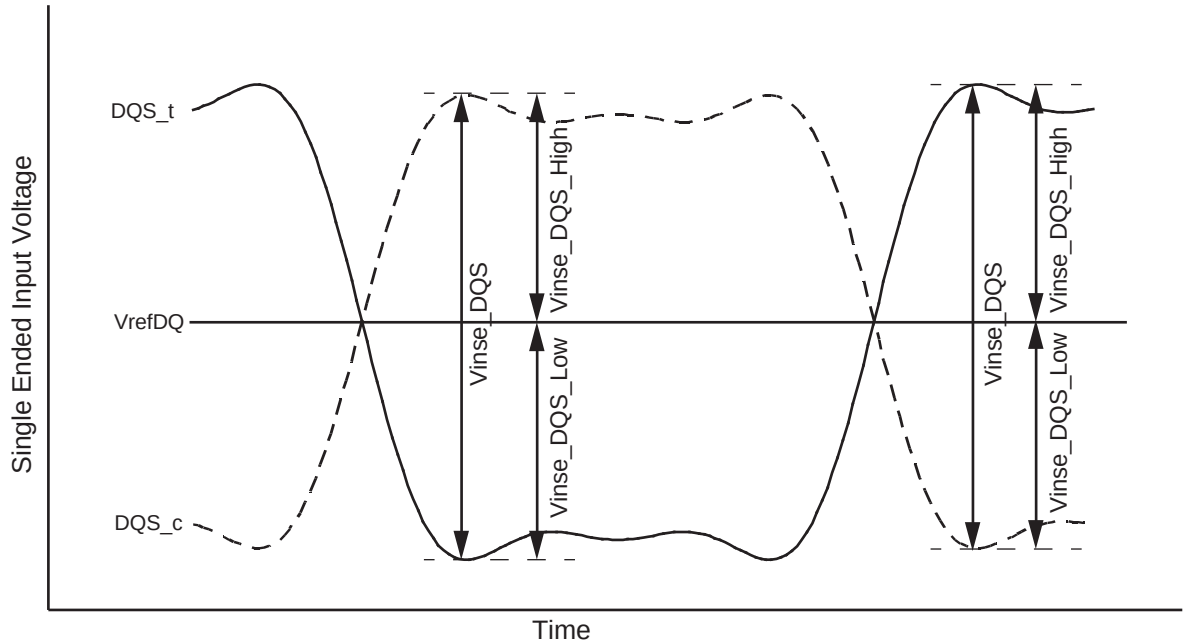

NOTES : 1. VrefDQ is LPDDR4 SDRAM internal setting value by Vref Training.

Figure 7.11 — DQS Single-Ended Input Voltage

Table 7.11 — DQS Single-Ended input voltage

Parameter	Symbol	Data Rate						Unit	Note
		1600/1867		2133/2400/3200		3733/4266			
		Min	Max	Min	Max	Min	Max		
DQS Single-Ended input voltage	Vinse_DQS	180	-	180	-	170	-	mV	1
DQS Single-Ended input voltage High from $V_{REF}DQ$	Vinse_DQS_High	90	-	90	-	85	-	mV	1
DQS Single-Ended input voltage Low from $V_{REF}DQ$	Vinse_DQS_Low	90	-	90	-	85	-	mV	1
NOTE 1 These requirements apply for DQ operating frequencies at or below 1333Mbps for all speed bins for the first column 1600/1867.									

7.2.9 Differential Input Slew Rate Definition for DQS

Input slew rate for differential signals (DQS_t, DQS_c) are defined and measured as shown in Figure 7.12 and Tables 7.12 to 7.14.

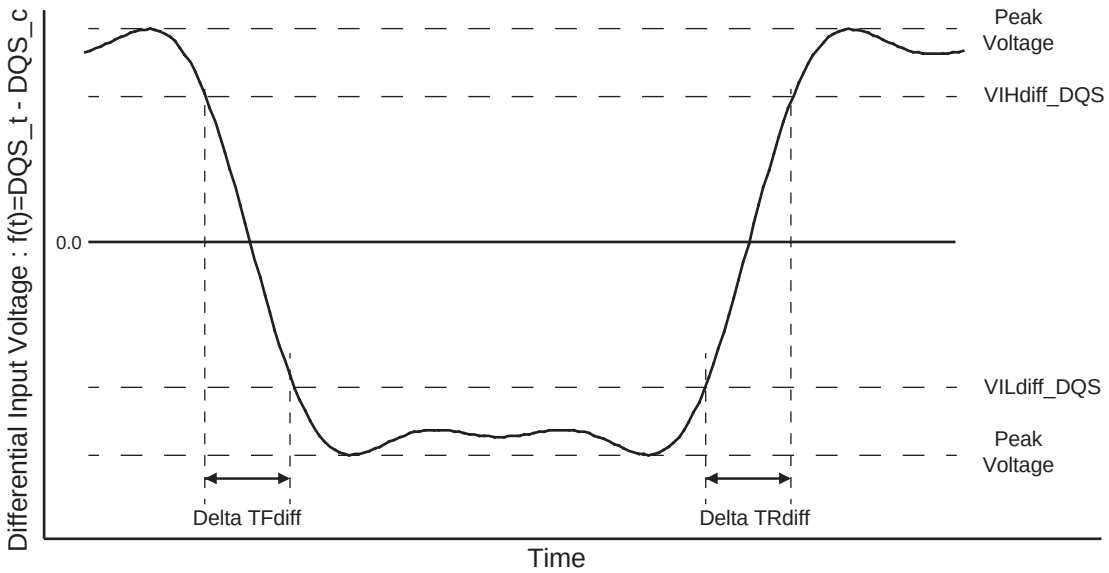

NOTES : 1. Differential signal rising edge from VILdiff_DQS to VIHdiff_DQS must be monotonic slope.
2. Differential signal falling edge from VIHdiff_DQS to VILdiff_DQS must be monotonic slope.

Figure 7.12 — Differential Input Slew Rate Definition for DQS_t, DQS_c

Table 7.12 — Differential Input Slew Rate Definition for DQS_t, DQS_c

Description	From	To	Defined by
Differential input slew rate for rising edge(DQS_t - DQS_c)	VILdiff_DQS	VIHdiff_DQS	|VILdiff_DQS - VIHdiff_DQS|/DeltaTRdiff
Differential input slew rate for falling edge(DQS_t - DQS_c)	VIHdiff_DQS	VILdiff_DQS	|VILdiff_DQS - VIHdiff_DQS|/DeltaTFdiff

Table 7.13 — Differential Input Level for DQS_t, DQS_c

Parameter	Symbol	Data Rate						Unit	Note
		1600/1867		2133/2400/3200		3733/4266			
		Min	Max	Min	Max	Min	Max		
Differential Input High	VIHdiff_DQS	140	-	140	-	120	-	mV	1
Differential Input Low	VILdiff_DQS	-	-140	-	-140	-	-120	mV	1

NOTE 1 The following requirements apply for DQ operating frequencies at or below 1333Mbps for all speed bins for the first column, 1600/1867.

Table 7.14 — Differential Input Slew Rate for DQS_t, DQS_c

Parameter	Symbol	Data Rate						Unit	Note
		1600/1867		2133/2400/3200		3733/4266			
		Min	Max	Min	Max	Min	Max		
Differential Input Slew Rate	SRIdiff	2	14	2	14	2	14	V/ns	1

NOTE 1 The following requirements apply for DQ operating frequencies at or below 1333Mbps for all speed bins for the first column, 1600/1867.

7.3 Differential Input Cross Point Voltage

The cross point voltage of differential input signals (DQS_t, DQS_c) must meet the requirements in Table 7.15. The differential input cross point voltage VIX is measured from the actual cross point of true and complement signals to the mid level that is $V_{REF}DQ$, as shown in Figure 7.13.

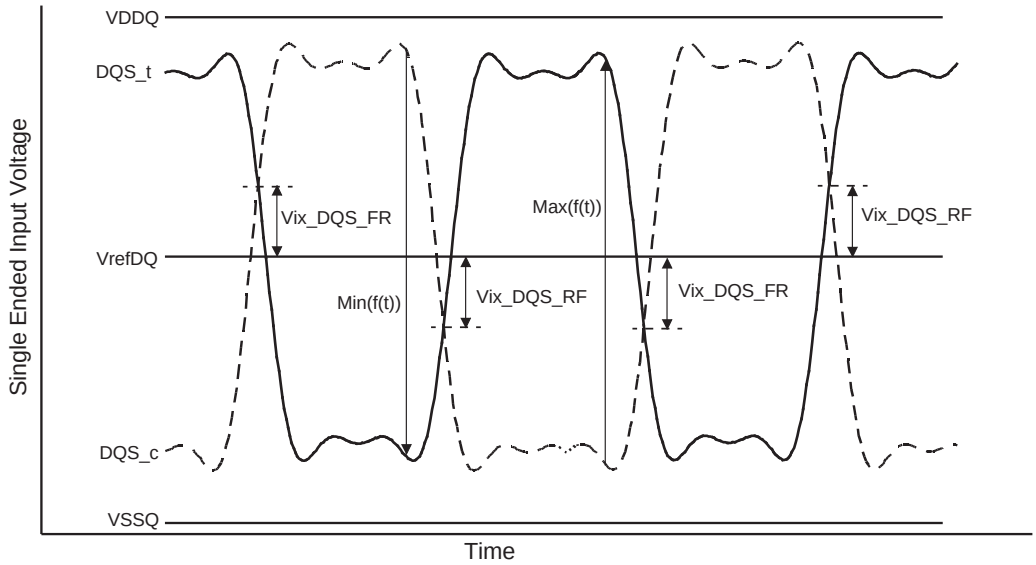

NOTES : 1. The base level of Vix_DQS_FR/RF is VrefDQ that is LPDDR4 SDRAM internal setting value by Vref Training.

Figure 7.13 — Vix Definition (DQS)

Table 7.15 — Cross point voltage for differential input signals (DQS)

Parameter	Symbol	Data Rate						Unit	Note
		1600/1867		2133/2400/3200		3733/4266			
		Min	Max	Min	Max	Min	Max		
DQS Differential input cross point voltage ratio	Vix_DQS_ratio	-	20	-	20	-	20	%	1,2,3

NOTE 1 The following requirements apply for DQ operating frequencies at or below 1333Mbps for all speed bins for the first column, 1600/1867.
NOTE 2 Vix_DQS_Ratio is defined by this equation: Vix_DQS_Ratio = Vix_DQS_FR/|Min(f(t))|.
NOTE 3 Vix_DQS_Ratio is defined by this equation: Vix_DQS_Ratio = Vix_DQS_RF/Max(f(t))

7.4 AC/DC Input level for ODT input

Table 7.16— LPDDR4 Input Level for ODT

Symbol		Min	Max	Unit	Note
VIHODT(AC)	ODT Input High Level (AC)	$0.75*V_{DD}$	$V_{DD}+0.2$	V	1
VILODT(AC)	ODT Input Low Level (AC)	-0.2	$0.25*V_{DD}$	V	1
VIHODT(DC)	ODT Input High Level (DC)	$0.65*V_{DD}$	$V_{DD}+0.2$	V	
VILODT(DC)	ODT Input Low Level (DC)	-0.2	$0.35*V_{DD}$	V	

Notes:
1. See Overshoot and Undershoot Specifications in Table 7.19.

7.5 Single Ended Output Slew Rate

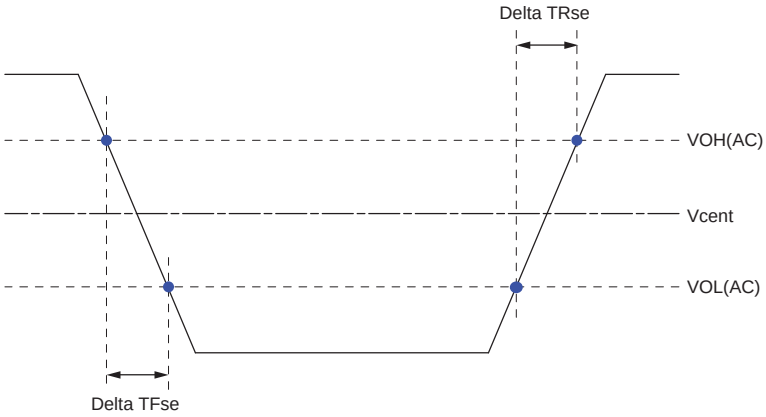

Figure 7.14— Single Ended Output Slew Rate Definition

Table 7.17(a) — Output Slew Rate (single-ended) for LPDDR4

Parameter	Symbol	Value		Units
		Min[1]	Max[2]	
Single-ended Output Slew Rate (VOH = $V_{DDQ}/3$)	SRQse	3.5	9	V/ns
Output slew-rate matching Ratio (Rise to Fall)	-	0.8	1.2	-

Table 7.17(b) — Output Slew Rate (single-ended) for LPDDR4X

Parameter	Symbol	Value		Units
		Min[1]	Max[2]	
Single-ended Output Slew Rate (VOH = $V_{DDQ}*0.5$)	SRQse[†]	3.0	9	V/ns
Output slew-rate matching Ratio (Rise to Fall)	-	0.8	1.2	-
[†] SR: Slew Rate, Q: Query Output (like in DQ, which stands for Data-in, Query-Output), se: Single-ended Signals				

Description: SR: Slew Rate
Q: Query Output (like in DQ, which stands for Data-in, Query-Output)
se: Single-ended Signals

Notes:
1. Measured with output reference load.
2. The ratio of pull-up to pull-down slew rate is specified for the same temperature and voltage, over the entire temperature and voltage range. For a given output, it represents the maximum difference between pull-up and pull-down drivers due to process variation.
3. The output slew rate for falling and rising edges is defined and measured between VOL(AC)=0.2*VOH(DC) and VOH(AC)= 0.8*VOH(DC).
4. Slew rates are measured under average SSO conditions, with 50% of DQ signals per data byte switching.

7.6 Differential Output Slew Rate

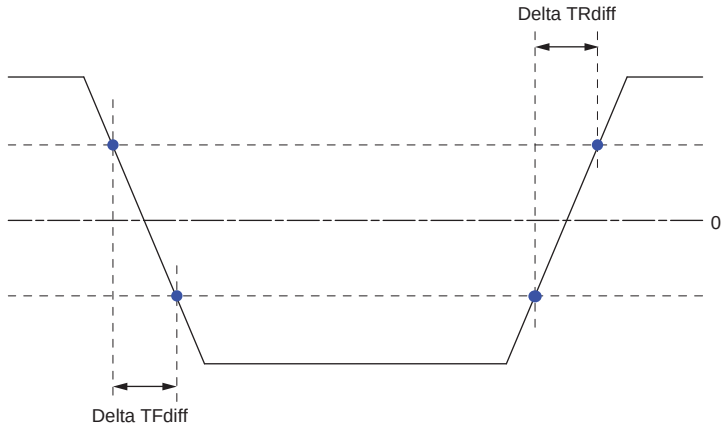

Figure 7.15 — Differential Output Slew Rate Definition

Table 7.18(a) — Differential Output Slew Rate for LPDDR4

Parameter	Symbol	Value		Units
		Min	Max	
Differential Output Slew Rate (VOH=V_{DDQ}/3)	SRQdiff	7	18	V/ns

Table 7.18 (b) — Differential Output Slew Rate for LPDDR4X

Parameter	**Symbol**	**Value**		**Units**
		Min	**Max**	
Differential Output Slew Rate (VOH = V_{DDQ}*0.5)	SRQdiff†	6	18	V/ns
† SR: Slew Rate, Q: Query Output (like in DQ, which stands for Data-in, Query-Output), diff: Differential Signals				

Description:
SR: Slew Rate
Q: Query Output (like in DQ, which stands for Data-in, Query-Output)
diff: Differential Signals
Notes:

1. Measured with output reference load.
2. The output slew rate for falling and rising edges is defined and measured between VOL(AC)= -0.8*VOH(DC) and VOH(AC)= 0.8*VOH(DC).
3. Slew rates are measured under average SSO conditions, with 50% of DQ signals per data byte switching.

7.7 Overshoot and Undershoot for LVSTL

Table 7.19 — AC Overshoot/Undershoot Specification

Parameter		Data Rate				Units
		1600	1866	3200	4266	
Maximum peak amplitude allowed for overshoot area. (See Figure 7.16)	Max	0.3	0.3	0.3	0.3	V
Maximum peak amplitude allowed for undershoot area. (See Figure 7.16)	Max	0.3	0.3	0.3	0.3	V
Maximum area above V_{DD}. (See Figure 7.16)	Max	0.1	0.1	0.1	0.1	V-ns
Maximum area below V_{SS}. (See Figure 7.16)	Max	0.1	0.1	0.1	0.1	V-ns

Notes:

1. V_{DD2} stands for V_{DD} for CA[5:0], CK_t, CK_c, CS_n, CKE and ODT. V_{DD} stands for V_{DDQ} for DQ, DMI, DQS_t and DQS_c.
2. V_{SS} stands for V_{SS} for CA[5:0], CK_t, CK_c, CS_n, CKE and ODT. V_{SS} stands for V_{SSQ} for DQ, DMI, DQS_t and DQS_c.
3. Maximum peak amplitude values are referenced from actual V_{DD} and V_{SS} values.
4. Maximum area values are referenced from maximum operating V_{DD} and V_{SS} values.

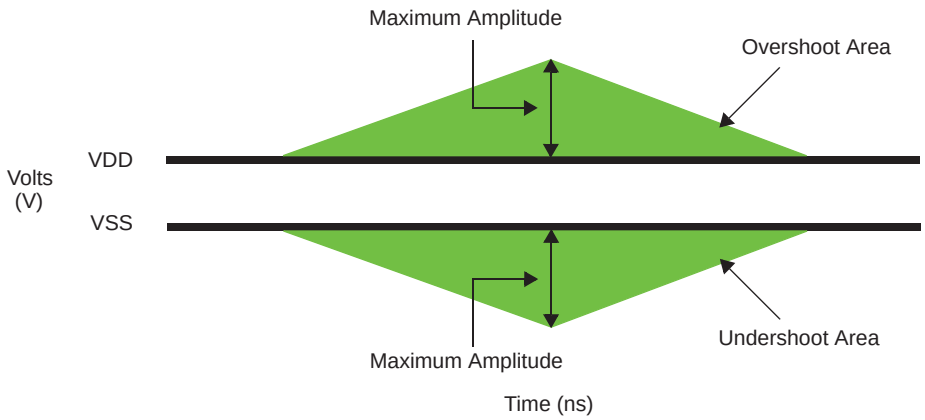

Figure 7.16 — Overshoot and Undershoot Definition

7.8 LPDDR4 Driver Output Timing Reference load

These 'Timing Reference Loads' are not intended as a precise representation of any particular system environment or a depiction of the actual load presented by a production tester. System designers should use IBIS or other simulation tools to correlate the timing reference load to a system environment. Manufacturers correlate to their production test conditions, generally one or more coaxial transmission lines terminated at the tester electronics.

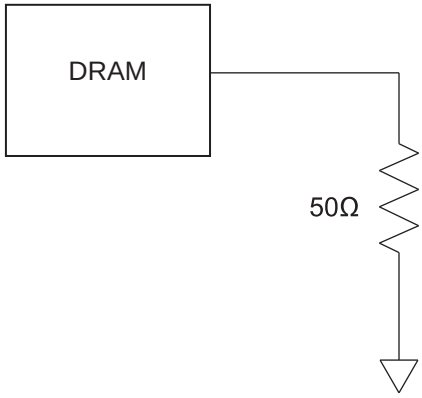

Note
1. All output timing parameter values are reported with respect to this reference load.

Figure 7.17 — Driver Output Reference Load for Timing and Slew Rate

7.9 LVSTL(Low Voltage Swing Terminated Logic) IO System

LVSTL I/O cell is comprised of pull-up, pull-down dirver and a terminator. The basic cell is shown in Figure 7.18.

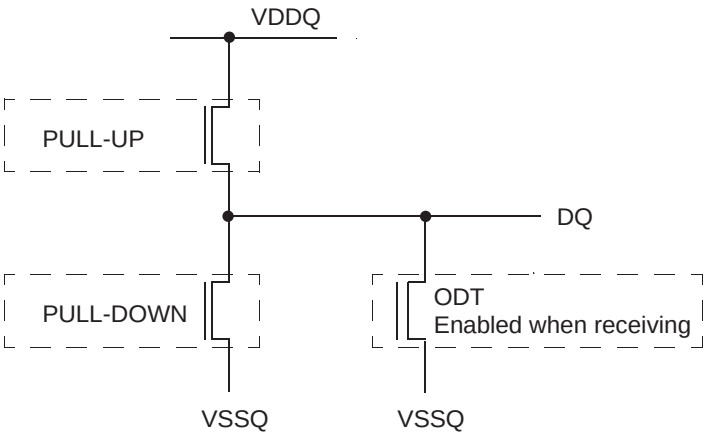

Figure 7.18 — LVSTL I/O Cell

To ensure that the target impedance is achived the LVSTL I/O cell is designed to calibrated as below procedure.

1. First calibrate the pull-down device against a 240 Ω resister to V_{DDQ} via the ZQ pin.

   - Set Strength Control to minimum setting.
   - Increase drive strength until comparator detects data bit is less than $V_{DDQ}/2$.
   - NMOS pull-down device is calibrated to 240 Ω.

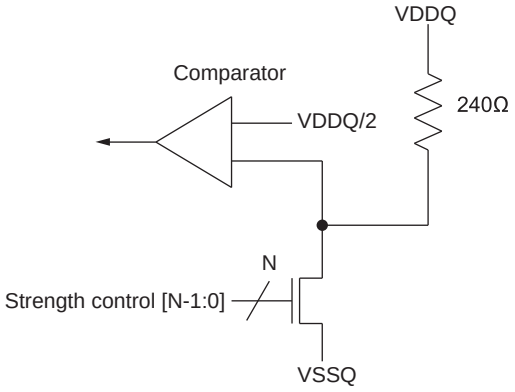

Figure 7.19 — Pull-down calibration

2. Then calibrate the pull-up device against the calibrated pull-down device.

- Set VOH target and NMOS controller ODT replica via MRS (VOH can be automatically controlled by ODT MRS).
- Set Strength Control to minimum setting.
- Increase drive strength until comparator detects data bit is grater than VOH target.
- NMOS pull-up device is now calibrated to VOH target.

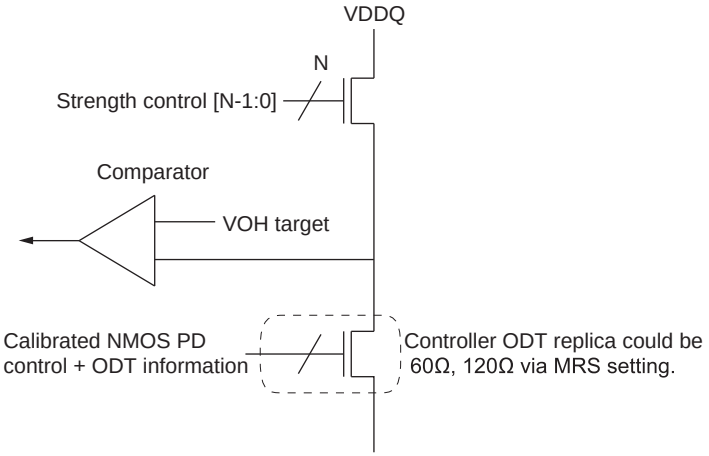

7.20 — pull-up calibration

8 Input/Output Capacitance

Table 8.1 — Input/output capacitance

Parameter	Symbol			Units	Notes
Input capacitance, CK_t and CK_c	CCK	Min	0.5	pF	1,2
		Max	0.9	pF	1,2
Input capacitance delta, CK_t and CK_c	CDCK	Min	0.0	pF	1,2,3
		Max	0.09	pF	1,2,3
Input capacitance, All other input-only pins	CI	Min	0.5	pF	1,2,4
		Max	0.9	pF	1,2,4
Input capacitance delta, All other input-only pins	CDI	Min	-0.1	pF	1,2,5
		Max	0.1	pF	1,2,5
Input/output capacitance, DQ, DMI, DQS_t, DQS_c	CIO	Min	0.7	pF	1,2,6
		Max	1.3	pF	1,2,6
Input/output capacitance delta, DQS_t, DQS_c	CDDQS	Min	0.0	pF	1,2,7
		Max	0.1	pF	1,2,7
Input/output capacitance delta, DQ, DMI	CDIO	Min	-0.1	pF	1,2,8
		Max	0.1	pF	1,2,8
Input/output capacitance, ZQ pin	CZQ	Min	0.0	pF	1,2
		Max	5.0	pF	1,2

Notes:

1. This parameter applies to die device only (does not include package capacitance).
2. This parameter is not subject to production test. It is verified by design and characterization. The capacitance is measured according to JEP147 (Procedure for measuring input capacitance using a vector network analyzer (VNA) with V_{DD1}, V_{DD2}, V_{DDQ}, V_{SS}, V_{SSQ} applied and all other pins floating.
3. Absolute value of CCK_t . CCK_c.
4. CI applieds to CS_n, CKE, CA0~CA5.
5. CDI = CI . 0.5 * (CCK_t + CCK_c)
6. DMI loading matches DQ and DQS.
7. Absolute value of CDQS_t and CDQS_c.
8. CDIO = CIO . 0.5 * (CDQS_t + CDQS_c) in byte-lane.

9 I_{DD} Specification parameters and test conditions

9.1 I_{DD} Measurement conditions

The following definitions are used within the I_{DD} measurement tables unless stated otherwise:

LOW: VIN ≤ VIL(DC) MAX
HIGH: VIN ≥ VIH(DC) MIN
STABLE: Inputs are stable at a HIGH or LOW level
SWITCHING: See Table 9.1 and Table 9.2.

Table 9.1 — Definition of Switching for CA Input Signals

Switching for CA								
CK_t edge	R1	R2	R3	R4	R5	R6	R7	R8
CKE	HIGH	HIGH	HIGH	HIGH	HIGH	HIGH	HIGH	HIGH
CS	LOW	LOW	LOW	LOW	LOW	LOW	LOW	LOW
CA0	HIGH	LOW	LOW	LOW	LOW	HIGH	HIGH	HIGH
CA1	HIGH	HIGH	HIGH	LOW	LOW	LOW	LOW	HIGH
CA2	HIGH	LOW	LOW	LOW	LOW	HIGH	HIGH	HIGH
CA3	HIGH	HIGH	HIGH	LOW	LOW	LOW	LOW	HIGH
CA4	HIGH	LOW	LOW	LOW	LOW	HIGH	HIGH	HIGH
CA5	HIGH	HIGH	HIGH	LOW	LOW	LOW	LOW	HIGH

NOTE 1 CS must always be driven LOW.
NOTE 2 50% of CA bus is changing between HIGH and LOW once per clock for the CA bus.
NOTE 3 The above pattern is used continuously during I_{DD} measurement for I_{DD} values that require switching on the CA bus.

Table 9.2 — CA pattern for IDD4R for BL=16

Clock Cycle Number	CKE	CS	Command	CA0	CA1	CA2	CA3	CA4	CA5
N	HIGH	HIGH	Read-1	L	H	L	L	L	L
N+1	HIGH	LOW		L	H	L	L	L	L
N+2	HIGH	HIGH	CAS-2	L	H	L	L	H	L
N+3	HIGH	LOW		L	L	L	L	L	L
N+4	HIGH	LOW	DES	L	L	L	L	L	L
N+5	HIGH	LOW	DES	L	L	L	L	L	L
N+6	HIGH	LOW	DES	L	L	L	L	L	L
N+7	HIGH	LOW	DES	L	L	L	L	L	L
N+8	HIGH	HIGH	Read-1	L	H	L	L	L	L
N+9	HIGH	LOW		L	H	L	L	H	L
N+10	HIGH	HIGH	CAS-2	L	H	L	L	H	H
N+11	HIGH	LOW		H	H	H	H	H	H
N+12	HIGH	LOW	DES	L	L	L	L	L	L
N+13	HIGH	LOW	DES	L	L	L	L	L	L
N+14	HIGH	LOW	DES	L	L	L	L	L	L
N+15	HIGH	LOW	DES	L	L	L	L	L	L

NOTE 1 BA[2:0] = 010, C[9:4] = 000000 or 111111, Burst Order C[3:2] = 00 or 11 (Same as LPDDR3 IDD4R Spec)
NOTE 2 Difference from LPDDR3 Spec : CA pins are kept low with DES CMD to reduce ODT current.

Table 9.3 — CA pattern for IDD4W for BL=16

Clock Cycle Number	CKE	CS	Command	CA0	CA1	CA2	CA3	CA4	CA5
N	HIGH	HIGH	Write-1	L	L	H	L	L	L
N+1	HIGH	LOW		L	H	L	L	L	L
N+2	HIGH	HIGH	CAS-2	L	H	L	L	H	L
N+3	HIGH	LOW		L	L	L	L	L	L
N+4	HIGH	LOW	DES	L	L	L	L	L	L
N+5	HIGH	LOW	DES	L	L	L	L	L	L
N+6	HIGH	LOW	DES	L	L	L	L	L	L
N+7	HIGH	LOW	DES	L	L	L	L	L	L
N+8	HIGH	HIGH	Write-1	L	L	H	L	L	L
N+9	HIGH	LOW		L	H	L	L	H	L
N+10	HIGH	HIGH	CAS-2	L	H	L	L	H	H
N+11	HIGH	LOW		L	L	H	H	H	H
N+12	HIGH	LOW	DES	L	L	L	L	L	L
N+13	HIGH	LOW	DES	L	L	L	L	L	L
N+14	HIGH	LOW	DES	L	L	L	L	L	L
N+15	HIGH	LOW	DES	L	L	L	L	L	L

NOTE 1 BA[2:0] = 010, C[9:4] = 000000 or 111111 (Same as LPDDR3 IDD4W Spec.)
NOTE 2 Difference from LPDDR3 Spec :
1-No burst ordering
2-CA pins are kept low with DES CMD to reduce ODT current.

Table 9.4 — Data Pattern for IDD4W (DBI off) for BL=16

	DBI OFF Case									No. of 1's
	DQ[7]	DQ[6]	DQ[5]	DQ[4]	DQ[3]	DQ[2]	DQ[1]	DQ[0]	DBI	
BL0	1	1	1	1	1	1	1	1	0	8
BL1	1	1	1	1	0	0	0	0	0	4
BL2	0	0	0	0	0	0	0	0	0	0
BL3	0	0	0	0	1	1	1	1	0	4
BL4	0	0	0	0	0	0	1	1	0	2
BL5	0	0	0	0	1	1	1	1	0	4
BL6	1	1	1	1	1	1	0	0	0	6
BL7	1	1	1	1	0	0	0	0	0	4
BL8	1	1	1	1	1	1	1	1	0	8
BL9	1	1	1	1	0	0	0	0	0	4
BL10	0	0	0	0	0	0	0	0	0	0
BL11	0	0	0	0	1	1	1	1	0	4
BL12	0	0	0	0	0	0	1	1	0	2
BL13	0	0	0	0	1	1	1	1	0	4
BL14	1	1	1	1	1	1	0	0	0	6
BL15	1	1	1	1	0	0	0	0	0	4
BL16	1	1	1	1	1	1	0	0	0	6
BL17	1	1	1	1	0	0	0	0	0	4
BL18	0	0	0	0	0	0	1	1	0	2
BL19	0	0	0	0	1	1	1	1	0	4
BL20	0	0	0	0	0	0	0	0	0	0
BL21	0	0	0	0	1	1	1	1	0	4
BL22	1	1	1	1	1	1	1	1	0	8
BL23	1	1	1	1	0	0	0	0	0	4
BL24	0	0	0	0	0	0	1	1	0	2
BL25	0	0	0	0	1	1	1	1	0	4
BL26	1	1	1	1	1	1	0	0	0	6
BL27	1	1	1	1	0	0	0	0	0	4
BL28	1	1	1	1	1	1	1	1	0	8
BL29	1	1	1	1	0	0	0	0	0	4
BL30	0	0	0	0	0	0	0	0	0	0
BL31	0	0	0	0	1	1	1	1	0	4
No. of 1's	16	16	16	16	16	16	16	16		

NOTE 1 Same data pattern was applied to DQ[4], DQ[5], DQ[6], DQ[7] for reducing complexity for IDD4W/R pattern programming.

Table 9.5 — Data Pattern for IDD4R (DBI off) for BL=16

DBI OFF Case										No. of 1's
	DQ[7]	DQ[6]	DQ[5]	DQ[4]	DQ[3]	DQ[2]	DQ[1]	DQ[0]	DBI	
BL0	1	1	1	1	1	1	1	1	0	8
BL1	1	1	1	1	0	0	0	0	0	4
BL2	0	0	0	0	0	0	0	0	0	0
BL3	0	0	0	0	1	1	1	1	0	4
BL4	0	0	0	0	0	0	1	1	0	2
BL5	0	0	0	0	1	1	1	1	0	4
BL6	1	1	1	1	1	1	0	0	0	6
BL7	1	1	1	1	0	0	0	0	0	4
BL8	1	1	1	1	1	1	1	1	0	8
BL9	1	1	1	1	0	0	0	0	0	4
BL10	0	0	0	0	0	0	0	0	0	0
BL11	0	0	0	0	1	1	1	1	0	4
BL12	0	0	0	0	0	0	1	1	0	2
BL13	0	0	0	0	1	1	1	1	0	4
BL14	1	1	1	1	1	1	0	0	0	6
BL15	1	1	1	1	0	0	0	0	0	4
BL16	1	1	1	1	1	1	1	1	0	8
BL17	1	1	1	1	0	0	0	0	0	4
BL18	0	0	0	0	0	0	0	0	0	0
BL19	0	0	0	0	1	1	1	1	0	4
BL20	1	1	1	1	1	1	0	0	0	6
BL21	1	1	1	1	0	0	0	0	0	4
BL22	0	0	0	0	0	0	1	1	0	2
BL23	0	0	0	0	1	1	1	1	0	4
BL24	0	0	0	0	0	0	0	0	0	0
BL25	0	0	0	0	1	1	1	1	0	4
BL26	1	1	1	1	1	1	1	1	0	8
BL27	1	1	1	1	0	0	0	0	0	4
BL28	0	0	0	0	0	0	1	1	0	2
BL29	0	0	0	0	1	1	1	1	0	4
BL30	1	1	1	1	1	1	0	0	0	6
BL31	1	1	1	1	0	0	0	0	0	4
No. of 1's	16	16	16	16	16	16	16	16		

NOTE Same data pattern was applied to DQ[4], DQ[5], DQ[6], DQ[7] for reducing complexity for IDD4W/R pattern programming.

Table 9.6 — Data Pattern for IDD4W (DBI on) for BL=16

	DBI ON Case									No. of 1's
	DQ[7]	DQ[6]	DQ[5]	DQ[4]	DQ[3]	DQ[2]	DQ[1]	DQ[0]	DBI	
BL0	0	0	0	0	0	0	0	0	1	1
BL1	1	1	1	1	0	0	0	0	0	4
BL2	0	0	0	0	0	0	0	0	0	0
BL3	0	0	0	0	1	1	1	1	0	4
BL4	0	0	0	0	0	0	1	1	0	2
BL5	0	0	0	0	1	1	1	1	0	4
BL6	0	0	0	0	0	0	1	1	1	3
BL7	1	1	1	1	0	0	0	0	0	4
BL8	0	0	0	0	0	0	0	0	1	1
BL9	1	1	1	1	0	0	0	0	0	4
BL10	0	0	0	0	0	0	0	0	0	0
BL11	0	0	0	0	1	1	1	1	0	4
BL12	0	0	0	0	0	0	1	1	0	2
BL13	0	0	0	0	1	1	1	1	0	4
BL14	0	0	0	0	0	0	1	1	1	3
BL15	1	1	1	1	0	0	0	0	0	4
BL16	0	0	0	0	0	0	1	1	1	3
BL17	1	1	1	1	0	0	0	0	0	4
BL18	0	0	0	0	0	0	1	1	0	2
BL19	0	0	0	0	1	1	1	1	0	4
BL20	0	0	0	0	0	0	0	0	0	0
BL21	0	0	0	0	1	1	1	1	0	4
BL22	0	0	0	0	0	0	0	0	1	1
BL23	1	1	1	1	0	0	0	0	0	4
BL24	0	0	0	0	0	0	1	1	0	2
BL25	0	0	0	0	1	1	1	1	0	4
BL26	0	0	0	0	0	0	1	1	1	3
BL27	1	1	1	1	0	0	0	0	0	4
BL28	0	0	0	0	0	0	0	0	1	1
BL29	1	1	1	1	0	0	0	0	0	4
BL30	0	0	0	0	0	0	0	0	0	0
BL31	0	0	0	0	1	1	1	1	0	4
No. of 1's	8	8	8	8	8	8	16	16	8	

DBI enabled burst

Table 9.7 — Data Pattern for IDD4R (DBI on) for BL=16

	DBI ON Case									No. of 1's
	DQ[7]	DQ[6]	DQ[5]	DQ[4]	DQ[3]	DQ[2]	DQ[1]	DQ[0]	DBI	
BL0	0	0	0	0	0	0	0	0	1	1
BL1	1	1	1	1	0	0	0	0	0	4
BL2	0	0	0	0	0	0	0	0	0	0
BL3	0	0	0	0	1	1	1	1	0	4
BL4	0	0	0	0	0	0	1	1	0	2
BL5	0	0	0	0	1	1	1	1	0	4
BL6	0	0	0	0	0	0	1	1	1	3
BL7	1	1	1	1	0	0	0	0	0	4
BL8	0	0	0	0	0	0	0	0	1	1
BL9	1	1	1	1	0	0	0	0	0	4
BL10	0	0	0	0	0	0	0	0	0	0
BL11	0	0	0	0	1	1	1	1	0	4
BL12	0	0	0	0	0	0	1	1	0	2
BL13	0	0	0	0	1	1	1	1	0	4
BL14	0	0	0	0	0	0	1	1	1	3
BL15	1	1	1	1	0	0	0	0	0	4
BL16	0	0	0	0	0	0	0	0	1	1
BL17	1	1	1	1	0	0	0	0	0	4
BL18	0	0	0	0	0	0	0	0	0	0
BL19	0	0	0	0	1	1	1	1	0	4
BL20	0	0	0	0	0	0	1	1	1	3
BL21	1	1	1	1	0	0	0	0	0	4
BL22	0	0	0	0	0	0	1	1	0	2
BL23	0	0	0	0	1	1	1	1	0	4
BL24	0	0	0	0	0	0	0	0	0	0
BL25	0	0	0	0	1	1	1	1	0	4
BL26	0	0	0	0	0	0	0	0	1	1
BL27	1	1	1	1	0	0	0	0	0	4
BL28	0	0	0	0	0	0	1	1	0	2
BL29	0	0	0	0	1	1	1	1	0	4
BL30	0	0	0	0	0	0	1	1	1	3
BL31	1	1	1	1	0	0	0	0	0	4
No. of 1's	8	8	8	8	8	8	16	16	8	

DBI enabled burst

Table 9.8 — CA pattern for IDD4R for BL=32

Clock Cycle Number	CKE	CS	Command	CA0	CA1	CA2	CA3	CA4	CA5
N	HIGH	HIGH	Read-1	L	H	L	L	L	L
N+1	HIGH	LOW		L	H	L	L	L	L
N+2	HIGH	HIGH	CAS-2	L	H	L	L	H	L
N+3	HIGH	LOW		L	L	L	L	L	L
N+4	HIGH	LOW	DES	L	L	L	L	L	L
N+5	HIGH	LOW	DES	L	L	L	L	L	L
N+6	HIGH	LOW	DES	L	L	L	L	L	L
N+7	HIGH	LOW	DES	L	L	L	L	L	L
N+8	HIGH	LOW	DES	L	L	L	L	L	L
N+9	HIGH	LOW	DES	L	L	L	L	L	L
N+10	HIGH	LOW	DES	L	L	L	L	L	L
N+11	HIGH	LOW	DES	L	L	L	L	L	L
N+12	HIGH	LOW	DES	L	L	L	L	L	L
N+13	HIGH	LOW	DES	L	L	L	L	L	L
N+14	HIGH	LOW	DES	L	L	L	L	L	L
N+15	HIGH	LOW	DES	L	L	L	L	L	L
N+16	HIGH	HIGH	Read-1	L	H	L	L	L	L
N+17	HIGH	LOW		L	H	L	L	H	L
N+18	HIGH	HIGH	CAS-2	L	H	L	L	H	H
N+19	HIGH	LOW		H	H	L	H	H	H
N+20	HIGH	LOW	DES	L	L	L	L	L	L
N+21	HIGH	LOW	DES	L	L	L	L	L	L
N+22	HIGH	LOW	DES	L	L	L	L	L	L
N+23	HIGH	LOW	DES	L	L	L	L	L	L
N+24	HIGH	LOW	DES	L	L	L	L	L	L
N+25	HIGH	LOW	DES	L	L	L	L	L	L
N+26	HIGH	LOW	DES	L	L	L	L	L	L
N+27	HIGH	LOW	DES	L	L	L	L	L	L
N+28	HIGH	LOW	DES	L	L	L	L	L	L
N+29	HIGH	LOW	DES	L	L	L	L	L	L
N+30	HIGH	LOW	DES	L	L	L	L	L	L
N+31	HIGH	LOW	DES	L	L	L	L	L	L
NOTE BA[2:0] = 010, C[9:5] = 00000 or 11111, Burst Order C[4:2] = 000 or 111.									

Table 9.9 — CA pattern for IDD4W for BL=32

Clock Cycle Number	CKE	CS	Command	CA0	CA1	CA2	CA3	CA4	CA5
N	HIGH	HIGH	Write-1	L	L	H	L	L	L
N+1	HIGH	LOW		L	H	L	L	L	L
N+2	HIGH	HIGH	CAS-2	L	H	L	L	H	L
N+3	HIGH	LOW		L	L	L	L	L	L
N+4	HIGH	LOW	DES	L	L	L	L	L	L
N+5	HIGH	LOW	DES	L	L	L	L	L	L
N+6	HIGH	LOW	DES	L	L	L	L	L	L
N+7	HIGH	LOW	DES	L	L	L	L	L	L
N+8	HIGH	LOW	DES	L	L	L	L	L	L
N+9	HIGH	LOW	DES	L	L	L	L	L	L
N+10	HIGH	LOW	DES	L	L	L	L	L	L
N+11	HIGH	LOW	DES	L	L	L	L	L	L
N+12	HIGH	LOW	DES	L	L	L	L	L	L
N+13	HIGH	LOW	DES	L	L	L	L	L	L
N+14	HIGH	LOW	DES	L	L	L	L	L	L
N+15	HIGH	LOW	DES	L	L	L	L	L	L
N+16	HIGH	HIGH	Write-1	L	L	H	L	L	L
N+17	HIGH	LOW		L	H	L	L	H	L
N+18	HIGH	HIGH	CAS-2	L	H	L	L	H	H
N+19	HIGH	LOW		L	L	L	H	H	H
N+20	HIGH	LOW	DES	L	L	L	L	L	L
N+21	HIGH	LOW	DES	L	L	L	L	L	L
N+22	HIGH	LOW	DES	L	L	L	L	L	L
N+23	HIGH	LOW	DES	L	L	L	L	L	L
N+24	HIGH	LOW	DES	L	L	L	L	L	L
N+25	HIGH	LOW	DES	L	L	L	L	L	L
N+26	HIGH	LOW	DES	L	L	L	L	L	L
N+27	HIGH	LOW	DES	L	L	L	L	L	L
N+28	HIGH	LOW	DES	L	L	L	L	L	L
N+29	HIGH	LOW	DES	L	L	L	L	L	L
N+30	HIGH	LOW	DES	L	L	L	L	L	L
N+31	HIGH	LOW	DES	L	L	L	L	L	L
NOTE BA[2:0] = 010, C[9:5] = 00000 or 11111									

Table 9.10 — Data Pattern for IDD4W (DBI off) for BL=32

	DBI OFF Case									No. of 1's
	DQ[7]	DQ[6]	DQ[5]	DQ[4]	DQ[3]	DQ[2]	DQ[1]	DQ[0]	DBI	
BL0	1	1	1	1	1	1	1	1	0	8
BL1	1	1	1	1	0	0	0	0	0	4
BL2	0	0	0	0	0	0	0	0	0	0
BL3	0	0	0	0	1	1	1	1	0	4
BL4	0	0	0	0	0	0	1	1	0	2
BL5	0	0	0	0	1	1	1	1	0	4
BL6	1	1	1	1	1	1	0	0	0	6
BL7	1	1	1	1	0	0	0	0	0	4
BL8	1	1	1	1	1	1	1	1	0	8
BL9	1	1	1	1	0	0	0	0	0	4
BL10	0	0	0	0	0	0	0	0	0	0
BL11	0	0	0	0	1	1	1	1	0	4
BL12	0	0	0	0	0	0	1	1	0	2
BL13	0	0	0	0	1	1	1	1	0	4
BL14	1	1	1	1	1	1	0	0	0	6
BL15	1	1	1	1	0	0	0	0	0	4
BL16	1	1	1	1	1	1	0	0	0	6
BL17	1	1	1	1	0	0	0	0	0	4
BL18	0	0	0	0	0	0	1	1	0	2
BL19	0	0	0	0	1	1	1	1	0	4
BL20	0	0	0	0	0	0	0	0	0	0
BL21	0	0	0	0	1	1	1	1	0	4
BL22	1	1	1	1	1	1	1	1	0	8
BL23	1	1	1	1	0	0	0	0	0	4
BL24	0	0	0	0	0	0	1	1	0	2
BL25	0	0	0	0	1	1	1	1	0	4
BL26	1	1	1	1	1	1	0	0	0	6
BL27	1	1	1	1	0	0	0	0	0	4
BL28	1	1	1	1	1	1	1	1	0	8
BL29	1	1	1	1	0	0	0	0	0	4
BL30	0	0	0	0	0	0	0	0	0	0
BL31	0	0	0	0	1	1	1	1	0	4

Table 9.10 — Data Pattern for IDD4W (DBI off) for BL=32 (Cont'd)

DBI OFF Case										No. of 1's
	DQ[7]	DQ[6]	DQ[5]	DQ[4]	DQ[3]	DQ[2]	DQ[1]	DQ[0]	DBI	
BL32	1	1	1	1	1	1	1	1	0	8
BL33	1	1	1	1	0	0	0	0	0	4
BL34	0	0	0	0	0	0	0	0	0	0
BL35	0	0	0	0	1	1	1	1	0	4
BL36	0	0	0	0	0	0	1	1	0	2
BL37	0	0	0	0	1	1	1	1	0	4
BL38	1	1	1	1	1	1	0	0	0	6
BL39	1	1	1	1	0	0	0	0	0	4
BL40	1	1	1	1	1	1	1	1	0	8
BL41	1	1	1	1	0	0	0	0	0	4
BL42	0	0	0	0	0	0	0	0	0	0
BL43	0	0	0	0	1	1	1	1	0	4
BL44	0	0	0	0	0	0	1	1	0	2
BL45	0	0	0	0	1	1	1	1	0	4
BL46	1	1	1	1	1	1	0	0	0	6
BL47	1	1	1	1	0	0	0	0	0	4
BL48	1	1	1	1	1	1	0	0	0	6
BL49	1	1	1	1	0	0	0	0	0	4
BL50	0	0	0	0	0	0	1	1	0	2
BL51	0	0	0	0	1	1	1	1	0	4
BL52	0	0	0	0	0	0	0	0	0	0
BL53	0	0	0	0	1	1	1	1	0	4
BL54	1	1	1	1	1	1	1	1	0	8
BL55	1	1	1	1	0	0	0	0	0	4
BL56	0	0	0	0	0	0	1	1	0	2
BL57	0	0	0	0	1	1	1	1	0	4
BL58	1	1	1	1	1	1	0	0	0	6
BL59	1	1	1	1	0	0	0	0	0	4
BL60	1	1	1	1	1	1	1	1	0	8
BL61	1	1	1	1	0	0	0	0	0	4
BL62	0	0	0	0	0	0	0	0	0	0
BL63	0	0	0	0	1	1	1	1	0	4
No. of 1's	32	32	32	32	32	32	32	32		

NOTE Same data pattern was applied to DQ[4], DQ[5], DQ[6], DQ[7] for reducing complexity for IDD4W/R pattern programming.

Table 9.11 — Data Pattern for IDD4R (DBI off) for BL=32

	DBI OFF Case									No. of 1's
	DQ[7]	DQ[6]	DQ[5]	DQ[4]	DQ[3]	DQ[2]	DQ[1]	DQ[0]	DBI	
BL0	1	1	1	1	1	1	1	1	0	8
BL1	1	1	1	1	0	0	0	0	0	4
BL2	0	0	0	0	0	0	0	0	0	0
BL3	0	0	0	0	1	1	1	1	0	4
BL4	0	0	0	0	0	0	1	1	0	2
BL5	0	0	0	0	1	1	1	1	0	4
BL6	1	1	1	1	1	1	0	0	0	6
BL7	1	1	1	1	0	0	0	0	0	4
BL8	1	1	1	1	1	1	1	1	0	8
BL9	1	1	1	1	0	0	0	0	0	4
BL10	0	0	0	0	0	0	0	0	0	0
BL11	0	0	0	0	1	1	1	1	0	4
BL12	0	0	0	0	0	0	1	1	0	2
BL13	0	0	0	0	1	1	1	1	0	4
BL14	1	1	1	1	1	1	0	0	0	6
BL15	1	1	1	1	0	0	0	0	0	4
BL16	1	1	1	1	1	1	0	0	0	6
BL17	1	1	1	1	0	0	0	0	0	4
BL18	0	0	0	0	0	0	1	1	0	2
BL19	0	0	0	0	1	1	1	1	0	4
BL20	0	0	0	0	0	0	0	0	0	0
BL21	0	0	0	0	1	1	1	1	0	4
BL22	1	1	1	1	1	1	1	1	0	8
BL23	1	1	1	1	0	0	0	0	0	4
BL24	0	0	0	0	0	0	1	1	0	2
BL25	0	0	0	0	1	1	1	1	0	4
BL26	1	1	1	1	1	1	0	0	0	6
BL27	1	1	1	1	0	0	0	0	0	4
BL28	1	1	1	1	1	1	1	1	0	8
BL29	1	1	1	1	0	0	0	0	0	4
BL30	0	0	0	0	0	0	0	0	0	0
BL31	0	0	0	0	1	1	1	1	0	4

Table 9.11 — Data Pattern for IDD4R (DBI off) for BL=32 (Cont'd)

	DBI OFF Case									No. of 1's
	DQ[7]	DQ[6]	DQ[5]	DQ[4]	DQ[3]	DQ[2]	DQ[1]	DQ[0]	DBI	
BL32	0	0	0	0	0	0	1	1	0	2
BL33	0	0	0	0	1	1	1	1	0	4
BL34	1	1	1	1	1	1	0	0	0	6
BL35	1	1	1	1	0	0	0	0	0	4
BL36	1	1	1	1	1	1	1	1	0	8
BL37	1	1	1	1	0	0	0	0	0	4
BL38	0	0	0	0	0	0	0	0	0	0
BL39	0	0	0	0	1	1	1	1	0	4
BL40	0	0	0	0	0	0	1	1	0	2
BL41	0	0	0	0	1	1	1	1	0	4
BL42	1	1	1	1	1	1	0	0	0	6
BL43	1	1	1	1	0	0	0	0	0	4
BL44	1	1	1	1	1	1	1	1	0	8
BL45	1	1	1	1	0	0	0	0	0	4
BL46	0	0	0	0	0	0	0	0	0	0
BL47	0	0	0	0	1	1	1	1	0	4
BL48	1	1	1	1	1	1	1	1	0	8
BL49	1	1	1	1	0	0	0	0	0	4
BL50	0	0	0	0	0	0	0	0	0	0
BL51	0	0	0	0	1	1	1	1	0	4
BL52	1	1	1	1	1	1	0	0	0	6
BL53	1	1	1	1	0	0	0	0	0	4
BL54	0	0	0	0	0	0	1	1	0	2
BL55	0	0	0	0	1	1	1	1	0	4
BL56	0	0	0	0	0	0	0	0	0	0
BL57	0	0	0	0	1	1	1	1	0	4
BL58	1	1	1	1	1	1	1	1	0	8
BL59	1	1	1	1	0	0	0	0	0	4
BL60	0	0	0	0	0	0	1	1	0	2
BL61	0	0	0	0	1	1	1	1	0	4
BL62	1	1	1	1	1	1	0	0	0	6
BL63	1	1	1	1	0	0	0	0	0	4
No. of 1's	32	32	32	32	32	32	32	32		

NOTE Same data pattern was applied to DQ[4], DQ[5], DQ[6], DQ[7] for reducing complexity for IDD4W/R pattern programming.

Table 9.12 — Data Pattern for IDD4W (DBI on) for BL=32

DBI ON Case										No. of 1's
	DQ[7]	DQ[6]	DQ[5]	DQ[4]	DQ[3]	DQ[2]	DQ[1]	DQ[0]	DBI	
BL0	0	0	0	0	0	0	0	0	1	1
BL1	1	1	1	1	0	0	0	0	0	4
BL2	0	0	0	0	0	0	0	0	0	0
BL3	0	0	0	0	1	1	1	1	0	4
BL4	0	0	0	0	0	0	1	1	0	2
BL5	0	0	0	0	1	1	1	1	0	4
BL6	0	0	0	0	0	0	1	1	1	3
BL7	1	1	1	1	0	0	0	0	0	4
BL8	0	0	0	0	0	0	0	0	1	1
BL9	1	1	1	1	0	0	0	0	0	4
BL10	0	0	0	0	0	0	0	0	0	0
BL11	0	0	0	0	1	1	1	1	0	4
BL12	0	0	0	0	0	0	1	1	0	2
BL13	0	0	0	0	1	1	1	1	0	4
BL14	0	0	0	0	0	0	1	1	1	3
BL15	1	1	1	1	0	0	0	0	0	4
BL16	0	0	0	0	0	0	1	1	1	3
BL17	1	1	1	1	0	0	0	0	0	4
BL18	0	0	0	0	0	0	1	1	0	2
BL19	0	0	0	0	1	1	1	1	0	4
BL20	0	0	0	0	0	0	0	0	0	0
BL21	0	0	0	0	1	1	1	1	0	4
BL22	0	0	0	0	0	0	0	0	1	1
BL23	1	1	1	1	0	0	0	0	0	4
BL24	0	0	0	0	0	0	1	1	0	2
BL25	0	0	0	0	1	1	1	1	0	4
BL26	0	0	0	0	0	0	1	1	1	3
BL27	1	1	1	1	0	0	0	0	0	4
BL28	0	0	0	0	0	0	0	0	1	1
BL29	1	1	1	1	0	0	0	0	0	4
BL30	0	0	0	0	0	0	0	0	0	0
BL31	0	0	0	0	1	1	1	1	0	4

DBI enabled burst

Table 9.12 — Data Pattern for IDD4W (DBI on) for BL=32 (Cont'd)

	DBI ON Case									No. of 1's
	DQ[7]	DQ[6]	DQ[5]	DQ[4]	DQ[3]	DQ[2]	DQ[1]	DQ[0]	DBI	
BL32	0	0	0	0	0	0	0	0	1	1
BL33	1	1	1	1	0	0	0	0	0	4
BL34	0	0	0	0	0	0	0	0	0	0
BL35	0	0	0	0	1	1	1	1	0	4
BL36	0	0	0	0	0	0	1	1	0	2
BL37	0	0	0	0	1	1	1	1	0	4
BL38	0	0	0	0	0	0	1	1	1	3
BL39	1	1	1	1	0	0	0	0	0	4
BL40	0	0	0	0	0	0	0	0	1	1
BL41	1	1	1	1	0	0	0	0	0	4
BL42	0	0	0	0	0	0	0	0	0	0
BL43	0	0	0	0	1	1	1	1	0	4
BL44	0	0	0	0	0	0	1	1	0	2
BL45	0	0	0	0	1	1	1	1	0	4
BL46	0	0	0	0	0	0	1	1	1	3
BL47	1	1	1	1	0	0	0	0	0	4
BL48	0	0	0	0	0	0	1	1	1	3
BL49	1	1	1	1	0	0	0	0	0	4
BL50	0	0	0	0	0	0	1	1	0	2
BL51	0	0	0	0	1	1	1	1	0	4
BL52	0	0	0	0	0	0	0	0	0	0
BL53	0	0	0	0	1	1	1	1	0	4
BL54	0	0	0	0	0	0	0	0	1	1
BL55	1	1	1	1	0	0	0	0	0	4
BL56	0	0	0	0	0	0	1	1	0	2
BL57	0	0	0	0	1	1	1	1	0	4
BL58	0	0	0	0	0	0	1	1	1	3
BL59	1	1	1	1	0	0	0	0	0	4
BL60	0	0	0	0	0	0	0	0	1	1
BL61	1	1	1	1	0	0	0	0	0	4
BL62	0	0	0	0	0	0	0	0	0	0
BL63	0	0	0	0	1	1	1	1	0	4
No. of 1's	16	16	16	16	16	16	32	32	16	

DBI enabled burst

Table 9.13 — Data Pattern for IDD4R (DBI on) for BL=32

	DBI ON Case									No. of 1's
	DQ[7]	DQ[6]	DQ[5]	DQ[4]	DQ[3]	DQ[2]	DQ[1]	DQ[0]	DBI	
BL0	0	0	0	0	0	0	0	0	1	1
BL1	1	1	1	1	0	0	0	0	0	4
BL2	0	0	0	0	0	0	0	0	0	0
BL3	0	0	0	0	1	1	1	1	0	4
BL4	0	0	0	0	0	0	1	1	0	2
BL5	0	0	0	0	1	1	1	1	0	4
BL6	0	0	0	0	0	0	1	1	1	3
BL7	1	1	1	1	0	0	0	0	0	4
BL8	0	0	0	0	0	0	0	0	1	1
BL9	1	1	1	1	0	0	0	0	0	4
BL10	0	0	0	0	0	0	0	0	0	0
BL11	0	0	0	0	1	1	1	1	0	4
BL12	0	0	0	0	0	0	1	1	0	2
BL13	0	0	0	0	1	1	1	1	0	4
BL14	0	0	0	0	0	0	1	1	1	3
BL15	1	1	1	1	0	0	0	0	0	4
BL16	0	0	0	0	0	0	1	1	1	3
BL17	1	1	1	1	0	0	0	0	0	4
BL18	0	0	0	0	0	0	1	1	0	2
BL19	0	0	0	0	1	1	1	1	0	4
BL20	0	0	0	0	0	0	0	0	0	0
BL21	0	0	0	0	1	1	1	1	0	4
BL22	0	0	0	0	0	0	0	0	1	1
BL23	1	1	1	1	0	0	0	0	0	4
BL24	0	0	0	0	0	0	1	1	0	2
BL25	0	0	0	0	1	1	1	1	0	4
BL26	0	0	0	0	0	0	1	1	1	3
BL27	1	1	1	1	0	0	0	0	0	4
BL28	0	0	0	0	0	0	0	0	1	1
BL29	1	1	1	1	0	0	0	0	0	4
BL30	0	0	0	0	0	0	0	0	0	0
BL31	0	0	0	0	1	1	1	1	0	4

DBI enabled burst

Table 9.13 — Data Pattern for IDD4R (DBI on) for BL=32 (Cont'd)

	DBI ON Case									No. of 1's
	DQ[7]	DQ[6]	DQ[5]	DQ[4]	DQ[3]	DQ[2]	DQ[1]	DQ[0]	DBI	
BL32	0	0	0	0	0	0	1	1	0	2
BL33	0	0	0	0	1	1	1	1	0	4
BL34	0	0	0	0	0	0	1	1	1	3
BL35	1	1	1	1	0	0	0	0	0	4
BL36	0	0	0	0	0	0	0	0	1	1
BL37	1	1	1	1	0	0	0	0	0	4
BL38	0	0	0	0	0	0	0	0	0	0
BL39	0	0	0	0	1	1	1	1	0	4
BL40	0	0	0	0	0	0	1	1	0	2
BL41	0	0	0	0	1	1	1	1	0	4
BL42	0	0	0	0	0	0	1	1	1	3
BL43	1	1	1	1	0	0	0	0	0	4
BL44	0	0	0	0	0	0	0	0	1	1
BL45	1	1	1	1	0	0	0	0	0	4
BL46	0	0	0	0	0	0	0	0	0	0
BL47	0	0	0	0	1	1	1	1	0	4
BL48	0	0	0	0	0	0	0	0	1	1
BL49	1	1	1	1	0	0	0	0	0	4
BL50	0	0	0	0	0	0	0	0	0	0
BL51	0	0	0	0	1	1	1	1	0	4
BL52	0	0	0	0	0	0	1	1	1	3
BL53	1	1	1	1	0	0	0	0	0	4
BL54	0	0	0	0	0	0	1	1	0	2
BL55	0	0	0	0	1	1	1	1	0	4
BL56	0	0	0	0	0	0	0	0	0	0
BL57	0	0	0	0	1	1	1	1	0	4
BL58	0	0	0	0	0	0	0	0	1	1
BL59	1	1	1	1	0	0	0	0	0	4
BL60	0	0	0	0	0	0	1	1	0	2
BL61	0	0	0	0	1	1	1	1	0	4
BL62	0	0	0	0	0	0	1	1	1	3
BL63	1	1	1	1	0	0	0	0	0	4
No. of 1's	16	16	16	16	16	16	32	32	16	

DBI enabled burst

9.2 I_{DD} Specifications

The IDD values in Table 9.14 and Table 9.15 apply to the entire operating voltage range, and to the specified operating temperature range (see section 6.4). The exceptions are IDD6 and IDD6ET.

Table 9.14 — LPDDR4 I_{DD} Specification Parameters and Operating Conditions

Parameter/Condition	Symbol	Power Supply	Notes
Operating one bank active-precharge current: tCK = tCKmin; tRC = tRCmin; CKE is HIGH; CS is LOW between valid commands; CA bus inputs are switching; Data bus inputs are stable ODT disabled	$I_{DD}0_1$	V_{DD1}	
	$I_{DD}0_2$	V_{DD2}	
	$I_{DD}0_Q$	V_{DDQ}	3
Idle power-down standby current: tCK = tCKmin; CKE is LOW; CS is LOW; All banks are idle; CA bus inputs are switching; Data bus inputs are stable ODT disabled	$I_{DD}2P_1$	V_{DD1}	
	$I_{DD}2P_2$	V_{DD2}	
	$I_{DD}2P_Q$	V_{DDQ}	3
Idle power-down standby current with clock stop: CK_t =LOW, CK_c =HIGH; CKE is LOW; CS is LOW; All banks are idle; CA bus inputs are stable; Data bus inputs are stable ODT disabled	$I_{DD}2PS_1$	V_{DD1}	
	$I_{DD}2PS_2$	V_{DD2}	
	$I_{DD}2PS_Q$	V_{DDQ}	3
Idle non power-down standby current: tCK = tCKmin; CKE is HIGH; CS is LOW; All banks are idle; CA bus inputs are switching; Data bus inputs are stable ODT disabled	$I_{DD}2N_1$	V_{DD1}	
	$I_{DD}2N_2$	V_{DD2}	
	$I_{DD}2N_Q$	V_{DDQ}	3
Idle non power-down standby current with clock stopped: CK_t=LOW; CK_c=HIGH; CKE is HIGH; CS is LOW; All banks are idle; CA bus inputs are stable; Data bus inputs are stable ODT disabled	$I_{DD}2NS_1$	V_{DD1}	
	$I_{DD}2NS_2$	V_{DD2}	
	$I_{DD}2NS_Q$	V_{DDQ}	3

Table 9.14 — LPDDR4 IDD Specification Parameters and Operating Conditions (Cont'd)

Parameter/Condition	Symbol	Power Supply	Notes
Active power-down standby current: tCK = tCKmin; CKE is LOW; CS is LOW; One bank is active; CA bus inputs are switching; Data bus inputs are stable ODT disabled	$I_{DD}3P_1$	V_{DD1}	
	$I_{DD}3P_2$	V_{DD2}	
	$I_{DD}3P_Q$	V_{DDQ}	3
Active power-down standby current with clock stop: CK_t=LOW, CK_c=HIGH; CKE is LOW; CS is LOW; One bank is active; CA bus inputs are stable; Data bus inputs are stable ODT disabled	$I_{DD}3PS_1$	V_{DD1}	
	$I_{DD}3PS_2$	V_{DD2}	
	$I_{DD}3PS_Q$	V_{DDQ}	4
Active non-power-down standby current: tCK = tCKmin; CKE is HIGH; CS is LOW; One bank is active; CA bus inputs are switching; Data bus inputs are stable ODT disabled	$I_{DD}3N_1$	V_{DD1}	
	$I_{DD}3N_2$	V_{DD2}	
	$I_{DD}3N_Q$	V_{DDQ}	4
Active non-power-down standby current with clock stopped: CK_t=LOW, CK_c=HIGH; CKE is HIGH; CS is LOW; One bank is active; CA bus inputs are stable; Data bus inputs are stable ODT disabled	$I_{DD}3NS_1$	V_{DD1}	
	$I_{DD}3NS_2$	V_{DD2}	
	$I_{DD}3NS_Q$	V_{DDQ}	4
Operating burst READ current: tCK = tCKmin; CS is LOW between valid commands; One bank is active; BL = 16 or 32; RL = RL(MIN); CA bus inputs are switching; 50% data change each burst transfer ODT disabled	$I_{DD}4R_1$	V_{DD1}	
	$I_{DD}4R_2$	V_{DD2}	
	$I_{DD}4R_Q$	V_{DDQ}	5

Table 9.14 —LPDDR4 IDD Specification Parameters and Operating Conditions (Cont'd)

Parameter/Condition	Symbol	Power Supply	Notes
Operating burst WRITE current: tCK = tCKmin; CS is LOW between valid commands; One bank is active; BL = 16 or 32; WL = WLmin; CA bus inputs are switching; 50% data change each burst transfer ODT disabled	$I_{DD}4W_1$	V_{DD1}	
	$I_{DD}4W_2$	V_{DD2}	
	$I_{DD}4W_Q$	V_{DDQ}	4

All-bank REFRESH Burst current:
tCK = tCKmin;
CKE is HIGH between valid commands;
tRC = tRFCabmin;
Burst refresh;
CA bus inputs are switching;
Data bus inputs are stable;
ODT disabled
	$I_{DD}5_1$	V_{DD1}	

	$I_{DD}5_2$	V_{DD2}	
	$I_{DD}5_Q$	V_{DDQ}	4

All-bank REFRESH Average current:
tCK = tCKmin;
CKE is HIGH between valid commands;
tRC = tREFI;
CA bus inputs are switching;
Data bus inputs are stable;
ODT disabled
	$I_{DD}5AB_1$	V_{DD1}	

	$I_{DD}5AB_2$	V_{DD2}	
	$I_{DD}5AB_Q$	V_{DDQ}	4

Per-bank REFRESH Average current:
tCK = tCKmin;
CKE is HIGH between valid commands;
tRC = tREFI/8;
CA bus inputs are switching;
Data bus inputs are stable;
ODT disabled
	$I_{DD}5PB_1$	V_{DD1}	

	$I_{DD}5PB_2$	V_{DD2}	
	$I_{DD}5PB_Q$	V_{DDQ}	4
Power Down Self refresh current : CK_t=LOW, CK_c=HIGH; CKE is LOW; CA bus inputs are stable; Data bus inputs are stable; Maximum 1x Self-Refresh Rate; ODT disabled	$I_{DD}6_1$	V_{DD1}	6, 7, 9, 10
	$I_{DD}6_2$	V_{DD2}	6, 7, 9, 10
	$I_{DD}6_Q$	V_{DDQ}	4, 6, 7, 9, 10

NOTE 1 Published IDD values except IDD4RQ are the maximum of the distribution of the arithmetic mean.
NOTE 2 ODT disabled: MR11[2:0] = 000B.
NOTE 3 I_{DD} current specifications are tested after the device is properly initialized.
NOTE 4 Measured currents are the summation of V_{DDQ} and V_{DD2}.
NOTE 5 Guaranteed by design with output load = 5pF and RON = 40 Ω.
NOTE 6 The 1x Self Refresh Rate is the rate at which the LPDDR4 device is refreshed internally during Self Refresh, before going into the elevated Temperature range.
NOTE 7 This is the general definition that applies to full array Self Refresh.
NOTE 8 For all I_{DD} measurements, VIHCKE = 0.8 x V_{DD2}, VILCKE = 0.2 x V_{DD2}.
NOTE 9 $I_{DD}6$ 45°C is the typical value in the distribution with nominal V_{DD} and a reference-only value.
NOTE 10 $I_{DD}6$ 95°C and $I_{DD}6_{ET}$ (105°C) are the maximum I_{DD} values considering the worst-case conditions of process, temperature, and voltage.
NOTE 11 Dual Channel devices are specified in dual channel operation (both channels operating together).

Table 9.15 — IDD Specifications

Symbol	Parameter	Supply	Speed Grade	
			-062(1600MHz)	-053 (1866MHz)
IDD0	IDD01	VDD1	56.0	56.0
	IDD02	VDD2	90.0	90.0
	IDD0Q	VDDQ	0.7	0.7
IDD2P	IDD2P1	VDD1	5.6	5.6
	IDD2P2	VDD2	12.0	12.0
	IDD2PQ	VDDQ	0.7	0.7
IDD2PS	IDD2PS1	VDD1	5.6	5.6
	IDD2PS2	VDD2	12.0	12.0
	IDD2PSQ	VDDQ	0.7	0.7
IDD2N	IDD2N1	VDD1	7.0	7.0
	IDD2N2	VDD2	80.0	80.0
	IDD2NQ	VDDQ	0.7	0.7
IDD2NS	IDD2NS1	VDD1	7.0	7.0
	IDD2NS2	VDD2	60.0	60.0
	IDD2NSQ	VDDQ	0.7	0.7
IDD3P	IDD3P1	VDD1	10.0	10.0
	IDD3P2	VDD2	14.0	14.0
	IDD3PQ	VDDQ	0.7	0.7
IDD3PS	IDD3PS1	VDD1	10.0	10.0
	IDD3PS2	VDD2	14.0	14.0
	IDD3PSQ	VDDQ	0.7	0.7
IDD3N	IDD3N1	VDD1	18.0	18.0
	IDD3N2	VDD2	70.0	70.0
	IDD3NQ	VDDQ	0.7	0.7
IDD3NS	IDD3NS1	VDD1	18.0	18.0
	IDD3NS2	VDD2	60.0	60.0
	IDD3NSQ	VDDQ	0.7	0.7
IDD4R	IDD4R1	VDD1	18.0	18.0
	IDD4R2	VDD2	560.0	640.0
	IDD4RQ	VDDQ	360.0	420.0
IDD4W	IDD4W1	VDD1	18.0	18.0
	IDD4W2	VDD2	400.0	460.0
	IDD4WQ	VDDQ	160.0	190.0
IDD5	IDD51	VDD1	180.0	180.0
	IDD52	VDD2	100.0	100.0
	IDD5Q	VDDQ	0.7	0.7
IDD5AB	IDD5AB1	VDD1	16.0	16.0
	IDD5AB2	VDD2	80.0	80.0
	IDD5ABQ	VDDQ	0.7	0.7
IDD5PB	IDD5PB1	VDD1	16.0	16.0
	IDD5PB2	VDD2	80.0	80.0
	IDD5PBQ	VDDQ	0.7	0.7

Table 9.16 — IDD6 Full-Array Self Refresh Current specifications

VDD2, VDDQ = 1.06 – 1.17V, VDD1 = 1.70 – 1.95V

Temp.	Parameter	Supply	Speed Grade	
			-062(1600MHz)	-053 (1866MHz)
45°C	IDD61	VDD1	4.0	4.0
	IDD62	VDD2	6.0	6.0
	IDD6Q	VDDQ	0.7	0.7
95°C	IDD61	VDD1	15	15
	IDD62	VDD2	10.0	10.0
	IDD6Q	VDDQ	0.7	0.7
105°C	IDD61	VDD1	20	20
	IDD62	VDD2	14.0	14.0
	IDD6Q	VDDQ	0.7	0.7

Notes:
1. IDD6 45°C is the typical; IDD6 95°C and IDD6 105°C are the maximum IDD values considering the worst-case conditions of process, temperature, and voltage.
2. When TC > 105°C, Self Refresh mode is not available..

10.1 Electrical Characteristics and AC Timing

10.1 Clock Timing

Table 10.1 — Clock AC Timings

Parameter	Symbol	LPDDR4-1600		LPDDR4-2400		LPDDR4-3200		LPDDR4-3733		Units	Notes
		Min	Max	Min	Max	Min	Max	Min	Max		
Clock Timing											
Average clock period	tCK(avg)	1.25	100	0.833	100	0.625	100	0.535	100	ns	1
Average High pulse width	tCH(avg)	0.46	0.54	0.46	0.54	0.46	0.54	0.46	0.54	tCK(avg)	
Average Low pulse width	tCL(avg)	0.46	0.54	0.46	0.54	0.46	0.54	0.46	0.54	tCK(avg)	
Absolute clock period	tCK(abs)	tCK(avg) Min + tJIT(per) Min	-	tCK(avg) Min + tJIT(per) Min	-	tCK(avg) Min + tJIT(per) Min	-	tCK(avg) Min + tJIT(per) Min	-	ns	
Absolute High clock pulse width	tCH(abs)	0.43	0.57	0.43	0.57	0.43	0.57	0.43	0.57	tCK(avg)	
Absolute Low clock pulse width	tCL(abs)	0.43	0.57	0.43	0.57	0.43	0.57	0.43	0.57	tCK(avg)	
Clock period jitter	tJIT(per)	-70	70	-50	50	-40	40	-34	34	ps	
Maximum Clock Jitter between consecutive cycles	tJIT(cc)	-	140	-	100	-	80	-	68	ps	

Note 1: Any timing parameters shown in this datasheet for LPDDR4-4266 are not supported for this product.

10.2 Temperature Derating for AC timing

Table 10.2 — Temperature Derating AC Timing

Parameter	Symbol	Min/ Max	Data Rate								Unit	Note
			533	1066	1600	2133	2667	3200	3733	4266		
Temperature Derating[1]												
DQS output access time from CK_t/CK_c (derated)	tDQSCK	max	3600								ps	
RAS-to-CAS delay (derated)	tRCD	min	tRCD + 1.875								ns	
ACTIVATE-to- ACTIVATE command period (derated)	tRC	min	tRC + 3.75								ns	
Row active time (derated)	tRAS	min	tRAS + 1.875								ns	
Row precharge time (derated)	tRP	min	tRP + 1.875								ns	
Active bank A to active bank B (derated)	tRRD	min	tRRD + 1.875								ns	

NOTE 1 Timing derating applies for operation at 105°C to 125°C.

10.3 CA Rx voltage and timing

The command and address(CA) including CS input receiver compliance mask for voltage and timing is shown in the figure below. All CA, CS signals apply the same compliance mask and operate in single data rate mode.

The CA input receiver mask for voltage and timing is shown in the figure below is applied across all CA pins. The receiver mask (Rx Mask) defines the area that the input signal must not encroach in order for the DRAM input receiver to be expected to be able to successfully capture a valid input signal; it is not the valid data-eye.

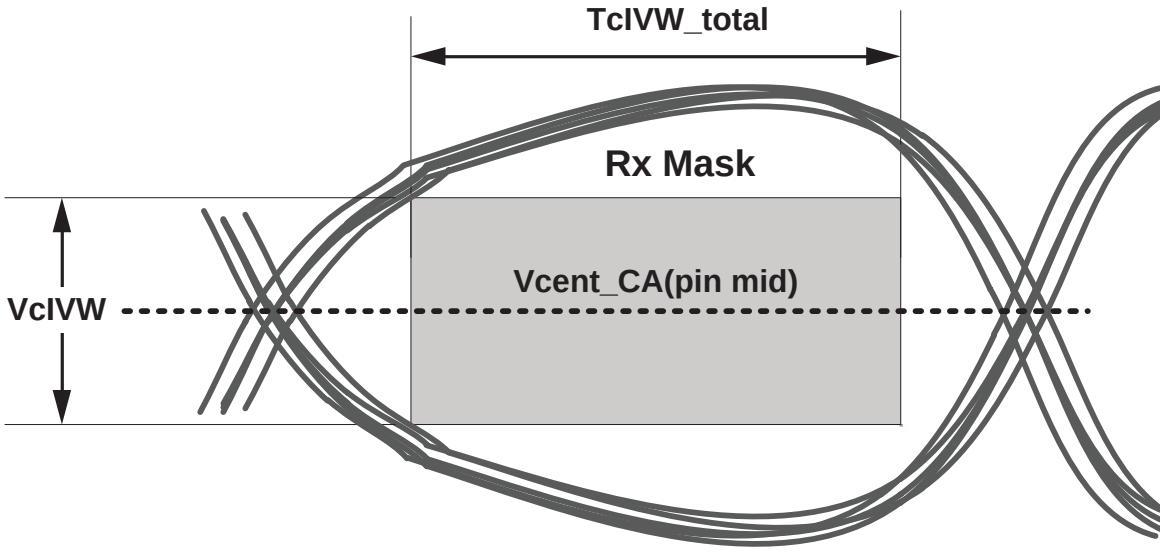

Figure 10.1 — CA Receiver(Rx) mask

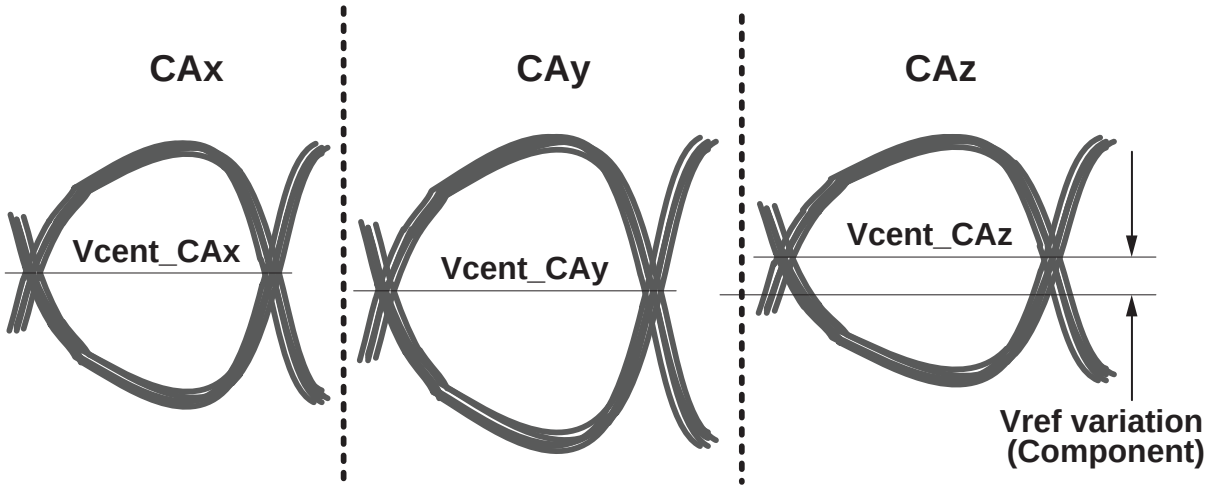

Figure 10.2 — Across pin V_{REF}CA voltage variation

Vcent_CA(pin mid) is defined as the midpoint between the largest Vcent_CA voltage level and the smallest Vcent_CA voltage level across all CA and CS pins for a given DRAM component. Each CA Vcent level is defined by the center, i.e., widest opening, of the cumulative data input eye as depicted in figure 10.2. This clarifies that any DRAM component level variation must be accounted for within the DRAM CA Rx mask. The component level V_{REF} will be set by the system to account for Ron and ODT settings.

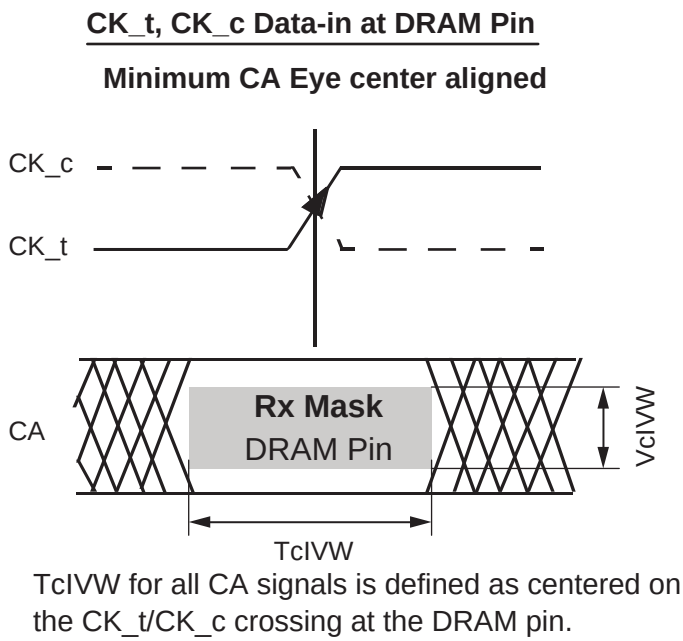

Figure 10.3 — CA Timings at the DRAM Pins

All of the timing terms in figure 10.4 are measured from the CK_t/CK_c to the center(midpoint) of the TcIVW window taken at the VcIVW_total voltage levels centered around Vcent_CA(pin mid).

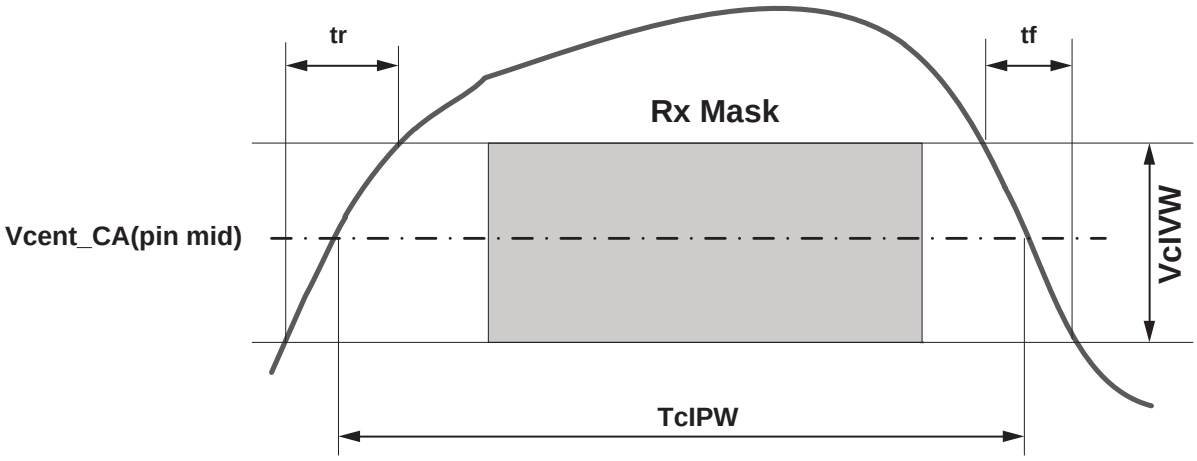

Note
1. SRIN_cIVW=VcIVW_Total/(tr or tf), signal must be monotonic within tr and tf range.

Figure 10.4 — CA TcIPW and SRIN_cIVW definition (for each input pulse)

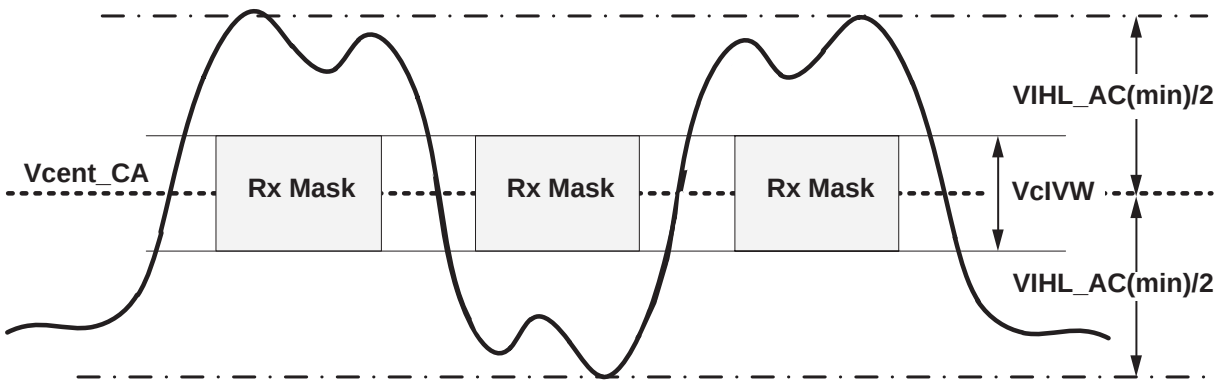

Figure 10.5 — CA VIHL_AC definition (for each input pulse)

Table 10.3 — DRAM CMD/ADR, CS

Symbol	Parameter	DQ-1333*		DQ-1600/1867		DQ-3200/3733		DQ-4266		Unit	NOTE
		min	max	min	max	min	max	min	max		
VcIVW	Rx Mask voltage - p-p	-	175	-	175	-	155	-	145	mV	1,2,3,4
TcIVW	Rx timing window	-	0.3	-	0.3	-	0.3	-	0.3	UI	1,2,3,4,9
VIHL_AC	CA AC input pulse amplitude pk-pk	210	-	210	-	190	-	180	-	mV	1,5,8
TcIPW	CA input pulse width	0.55		0.55		0.6		0.6		UI	2,6,9
SRIN_cIVW	Input Slew Rate over VcIVW	1	7	1	7	1	7	1	7	V/ns	1,7

NOTES:
NOTE 1 The Rx voltage and absolute timing requirements apply for DQ operating frequencies at or below 1333 for all speed bins. For example, the TcIVW(ps) = 450ps at or below 1333 operating frequencies.
NOTE 2 CA Rx mask voltage and timing parameters at the pin including voltage and temperature drift.
NOTE 3 Rx mask voltage VcIVW total(max) must be centered around Vcent_CA(pin mid).
NOTE 4 Vcent_CA must be within the adjustment range of the CA internal Vref.
NOTE 5 CA only input pulse signal amplitude into the receiver must meet or exceed VIHL AC at any point over the total UI. No timing requirement above level. VIHL AC is the peak to peak voltage centered around Vcent_CA(pin mid) such that VIHL_AC/2 min must be met both above and below Vcent_CA.
NOTE 6 CA only minimum input pulse width defined at the Vcent_CA(pin mid).
NOTE 7 Input slew rate over VcIVW Mask centered at Vcent_CA(pin mid).
NOTE 8 VIHL_AC does not have to be met when no transitions are occurring.
NOTE 9 UI=tck(avg)min

10.4 DRAM Data Timing

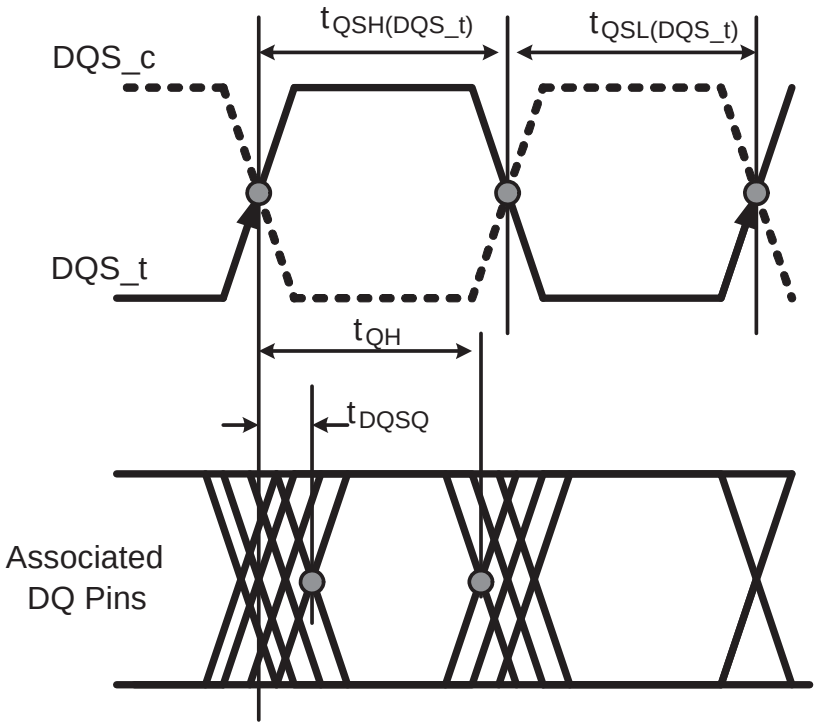

Figure 10.6 — Read data timing definitions tQH and tDQSQ across on DQ signals per DQS group

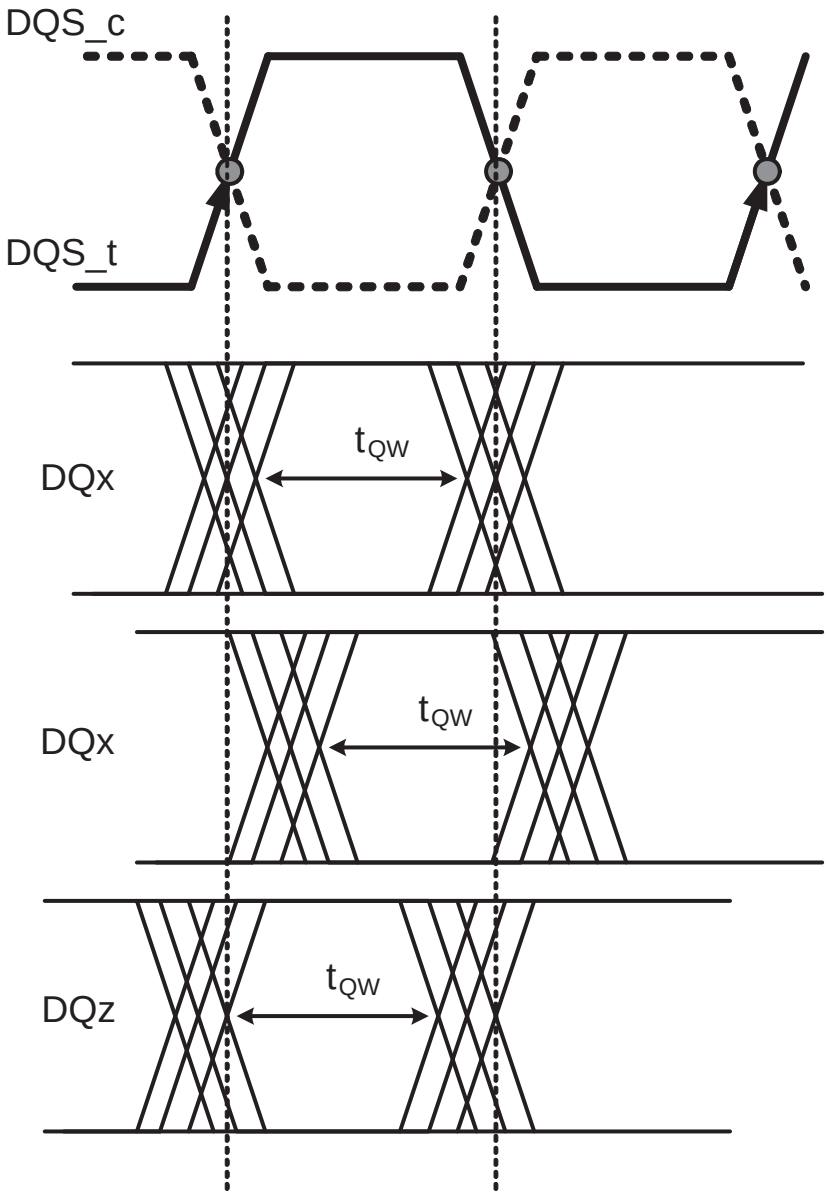

Figure 10.7 — Read data timing tQW valid window defined per DQ signal

Table 10.4 — Read output timings

Parameter	Symbol	LPDDR4-1600/1867		LPDDR4-2133/2400		LPDDR4-3200/3733		Units	Notes
		Min	Max	Min	Max	Min	Max		
Data Timing									
DQS_t,DQS_c to DQ Skew total, per group, per access (DBIDisabled)	tDQSQ	-	0.18	-	0.18	-	0.18	UI	1
DQ output hold time total from DQS_t, DQS_c (DBI-Disabled)	tQH	min(tQSH, tQSL)	-	min(tQSH, tQSL)	-	min(tQSH, tQSL)	-	UI	1
DQ output window time total, per pin (DBI-Disabled)	tQW_total	0.75	-	0.73	-	0.7	-	UI	1,3
DQS_t,DQS_c to DQ Skew total,per group, per access (DBI-Enabled)	tDQSQ_DBI	-	0.18	-	0.18	-	0.18	UI	1
DQ output hold time total from DQS_t, DQS_c (DBI-Enabled)	tQH_DBI	min(tQSH_DBI, tQSL_DBI)	-	min(tQSH_DBI, tQSL_DBI)	-	min(tQSH_DBI, tQSL_DBI)	-	UI	1
DQ output window time total, per pin (DBI-Enabled)	tQW_total_DBI	0.75	-	0.73	-	0.70	-	UI	1,3
Data Strobe Timing									
DQS, DQS# differential output low time (DBI-Disabled)	tQSL	tCL(abs) -0.05	-	tCL(abs) -0.05	-	tCL(abs) -0.05	-	tCK(avg)	3,4
DQS, DQS# differential output high time (DBI-Disabled)	tQSH	tCH(abs) -0.05	-	tCH(abs) -0.05	-	tCH(abs) -0.05	-	tCK(avg)	3,5
DQS, DQS# differential output low time (DBI-Enabled)	tQSL_DBI	tCL(abs) -0.045	-	tCL(abs) -0.045	-	tCL(abs) -0.045	-	tCK(avg)	4,6
DQS, DQS# differential output high time (DBI-Enabled)	tQSH_DBI	tCH(abs) -0.045	-	tCH(abs) -0.045	-	tCH(abs) -0.045	-	tCK(avg)	5,6

NOTE 1 Unit UI = tCK(avg)min/2
NOTE 2 The deterministic component of the total timing. Measurement method TBD.
NOTE 3 This parameter is function of input clock jitter. These values assume the min tCH(abs) and tCL(abs). When the input clock jitter min tCH(abs) and tCL(abs) is 0.44 or greater of tck(avg) the min value of tQSL will be tCL(abs)-0.04 and tQSH will be tCH(abs) -0.04.
NOTE 4 tQSL describes the instantaneous differential output low pulse width on DQS_t - DQS_c, as it measured the next rising edge from an arbitrary falling edge.
NOTE 5 tQSH describes the instantaneous differential output high pulse width on DQS_t - DQS_c, as it measured the next rising edge from an arbitrary falling edge.
NOTE 6 This parameter is a function of input clock jitter. These values assume the min tCH(abs) and tCL(abs). When the input clock jitter min tCH(abs) and tCL(abs) is 0.44 or greater of tck(avg) the min value of tQSL will be tCL(abs)-0.04 and tQSH will be tCH(abs) -0.04.
NOTE 7 The Tx voltage and absolute timing requirements at 1600Mbps apply for all DQ operating frequencies for speed bins which are less than 1600Mbps.

10.5 DQ Rx voltage and timing

The DQ input receiver mask for voltage and timing is shown figure 10.8 is applied per pin. The "total" mask (VdIVW_total, TdiVW_total) defines the area the input signal must not encroach in order for the DQ input receiver to successfully capture an input signal with a BER of lower than TBD[1]. The mask is a receiver property and it is not the valid
data-eye.

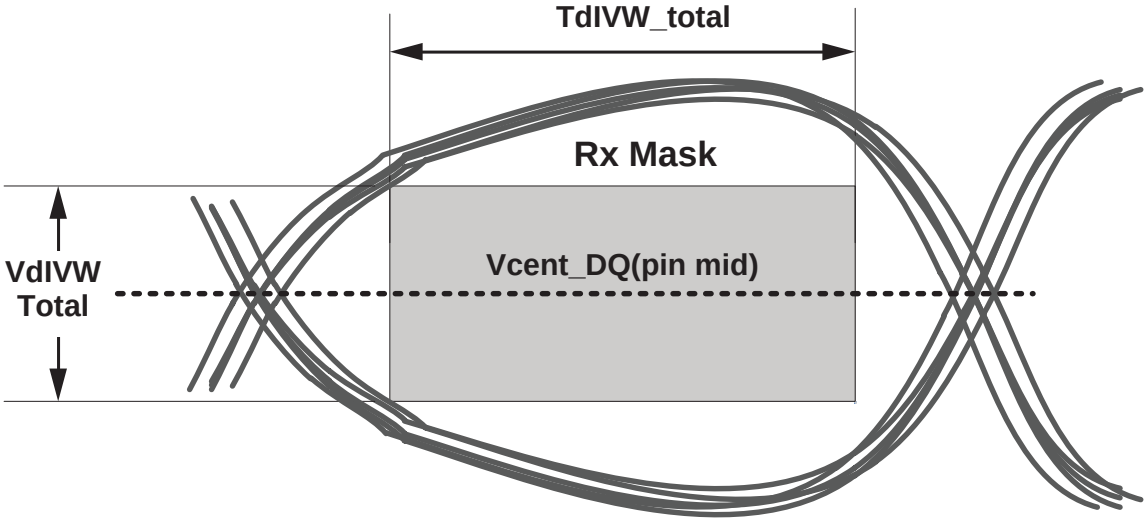

Figure 10.8 — DQ Receiver(Rx) mask

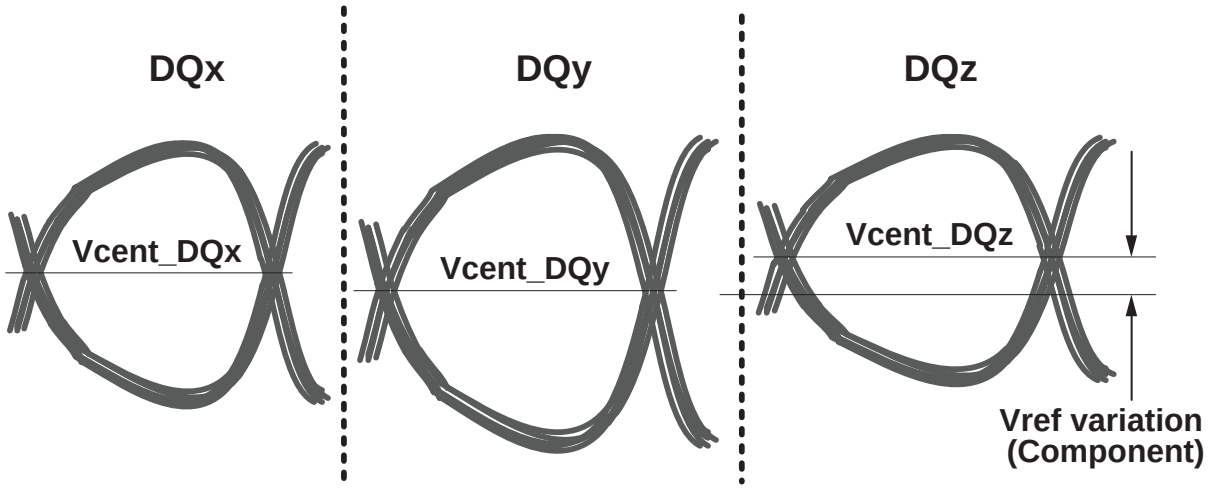

Figure 10.9 — Across pin V_{REF}DQ voltage variation

Vcent_DQ(pin_mid) is defined as the midpoint between the largest Vcent_DQ voltage level and the smallest Vcent_DQ voltage level across all DQ pins for a given DRAM component. Each DQ Vcent is defined by the center, i.e., widest opening, of the cumulative data input eye as depicted in Figure 10.9. This clarifies that any DRAM component level variation must be accounted for within the DRAM Rx mask. The component level V_{REF} will be set by the system to account for Ron and ODT settings.

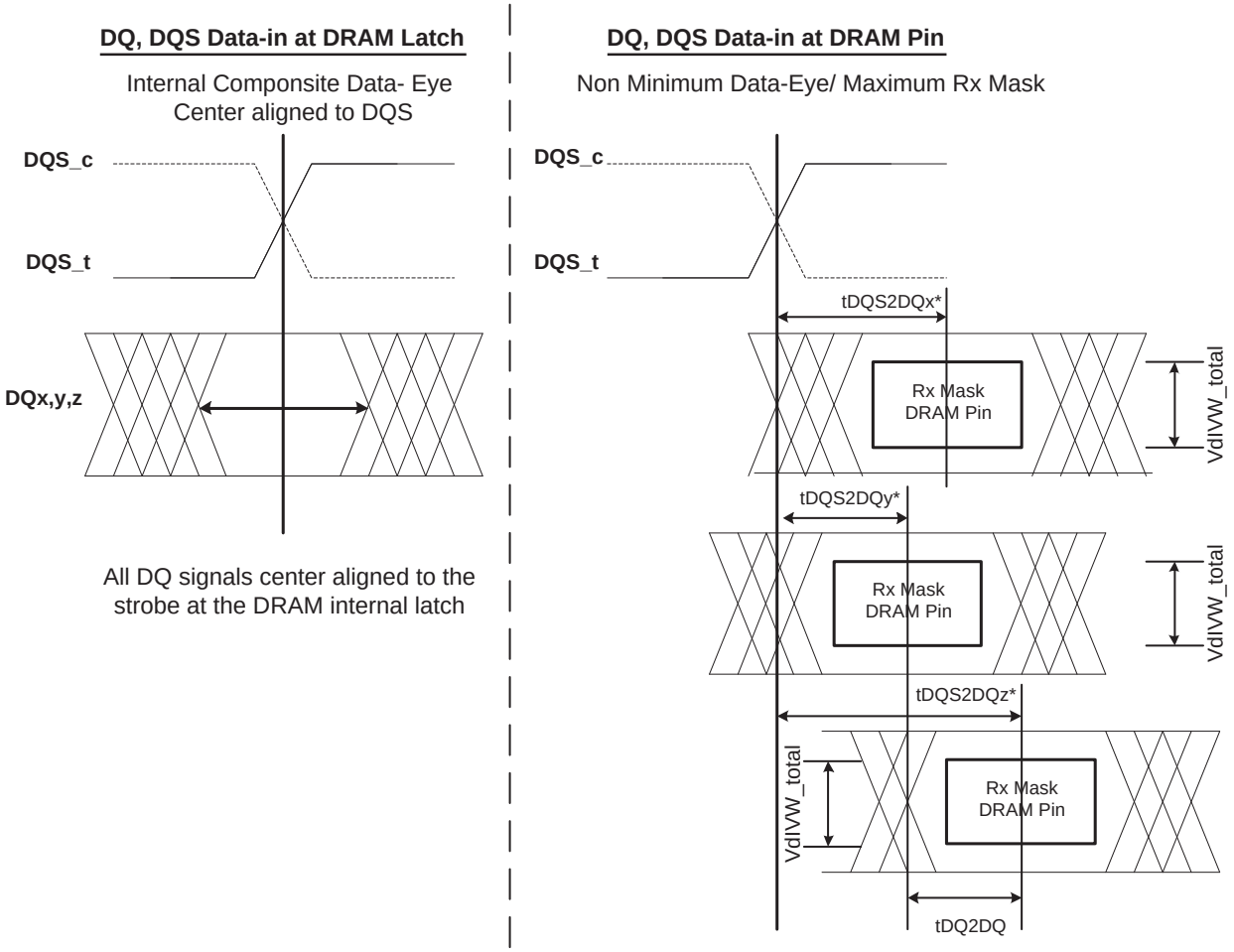

NOTE:

1. tDQS2DQ is measured at the center(midpoint) of the TdiVW window.
2. DQz represents the max tDQS2DQ in this example
3. DQy represents the min tDQS2DQ in this example

Figure 10.10 — DQ to DQS t_{DQS2DQ} & t_{DQDQ} Timings at the DRAM pins referenced from the internal latch

All of the timing terms in DQ to DQS t are measured from the DQS_t/DQS_c to the center(midpoint) of the TdIVW window taken at the VdIVW_total voltage levels centered around Vcent_DQ(pin_mid). In Figure 10.10 the timings at the pins are referenced with respect to all DQ signals center aligned to the DRAM internal latch. The data to data offset is defined as the difference between the min and max tDQS2DQ for a given component.

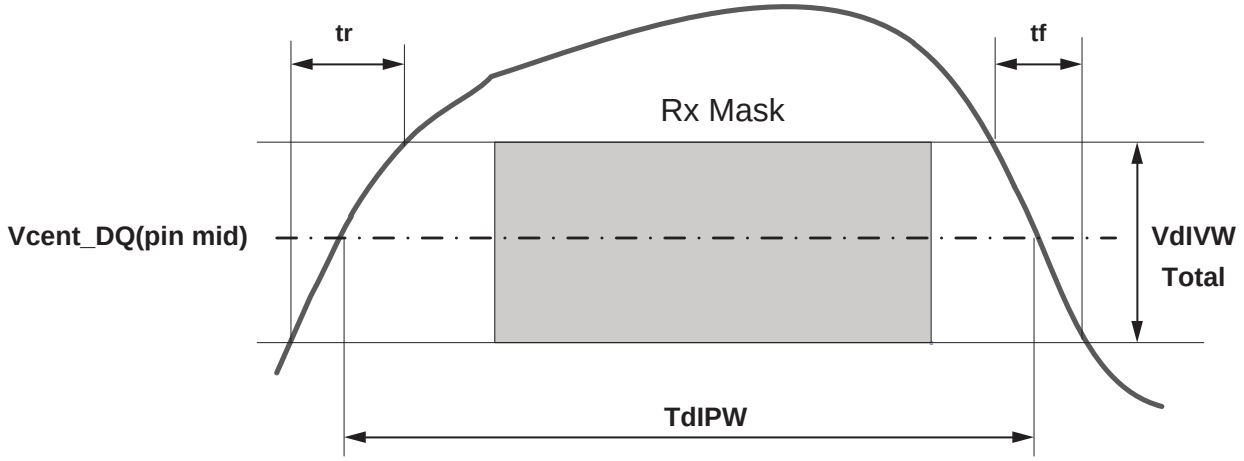

Note
1. SRIN_dIVW=VdIVW_Total/(tr or tf), signal must be monotonic within tr and tf range.

Figure 10.11 — DQ TdIPW and SRIN_dIVW definition (for each input pulse)

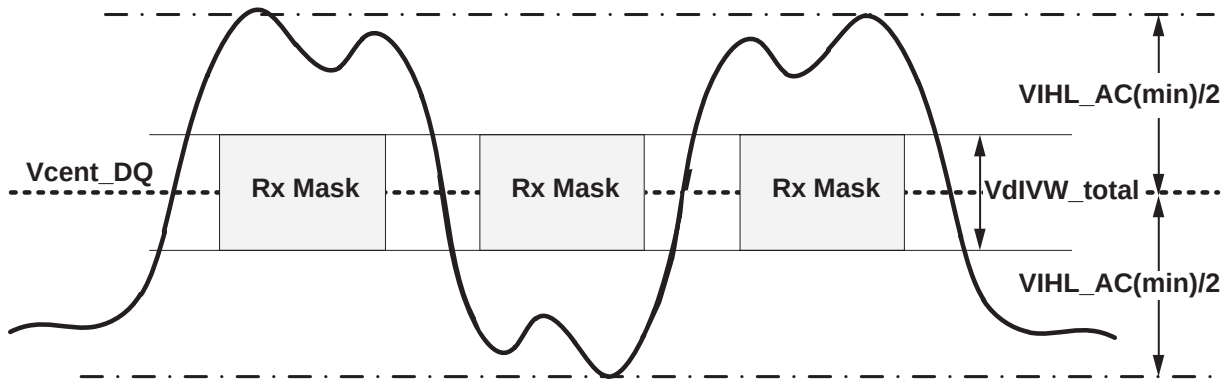

Figure 10.12 — DQ VIHL_AC definition (for each input pulse)

Table 10.6 — DRAM DQs In Receive Mode

Symbol	Parameter	1600/1867		2133/2400		3200/3733		Unit	NOTE
		min	max	min	max	min	max		
VdIVW_total	Rx Mask voltage - p-p total	-	140	-	140	-	140	mV	1,2,3,4,5
TdIVW_total	Rx timing window total (At VdIVW voltage levels)	-	0.22	-	0.22	-	0.25	UI	1,2,3,5,18
VIHL_AC	DQ AC input pulse amplitude pk-pk	180	-	180	-	180	-	mV	1,6,14
TdIPW DQ	Input pulse width (At Vcent_DQ)	0.45		0.45		0.45		UI	1,7,18
tDQS2DQ	DQ to DQS offset	200	800	200	800	200	800	ps	1,8
tDQ2DQ	DQ to DQ offset	-	30	-	30	-	30	ps	1,9
tDQS2DQ_temp	DQ to DQS offset temperature variation	-	0.6	-	0.6	-	0.6	ps/ C	1,10
tDQS2DQ_volt	DQ to DQS offset voltage variation	-	33	-	33	-	33	ps/50 mV	1,11
SRIN_dIVW	Input Slew Rate over VdIVW_total	1	7	1	7	1	7	V/ns	1,12
tDQS2DQ_rank2rank	DQ to DQS offset rank to rank variation	-	200	-	200	-	200	ps	1,15,16,17

NOTE 1 The Rx voltage and absolute timing requirements apply for all DQ operating frequencies at or below 1600 for all speed bins. For example TdIVW_total(ps) = 137.5ps at or below 1600 operating frequencies.
NOTE 2 Data Rx mask voltage and timing parameters are applied per pin and includes the DRAM DQ to DQS voltage AC noise impact for frequencies >20 MHz and max voltage of 45mv pk-pk from DC-20MHz at a fixed temperature on the package. The voltage supply noise must comply to the component Min-Max DC operating conditions.
NOTE 3 The design specification is a BER <TBD. The BER will be characterized and extrapolated if necessary using a dual dirac method.
NOTE 4 Rx mask voltage VdIVW total(max) must be centered around Vcent_DQ(pin_mid).
NOTE 5 Vcent_DQ must be within the adjustment range of the DQ internal Vref.
NOTE 6 DQ only input pulse amplitude into the receiver must meet or exceed VIHL AC at any point over the total UI. No timing requirement above level. VIHL AC is the peak to peak voltage centered around Vcent_DQ(pin_mid) such that VIHL_AC/2 min must be met both above and below Vcent_DQ.
NOTE 7 DQ only minimum input pulse width defined at the Vcent_DQ(pin_mid).
NOTE 8 DQ to DQS offset is within byte from DRAM pin to DRAM internal latch. Includes all DRAM process, voltage and temperature variation.
NOTE 9 DQ to DQ offset defined within byte from DRAM pin to DRAM internal latch for a given component.
NOTE 10 TDQS2DQ max delay variation as a function of temperature.
NOTE 11 TDQS2DQ max delay variation as a function of the DC voltage variation for V_{DDQ} and V_{DD2}. It includes the V_{DDQ} and V_{DD2} AC noise impact for frequencies > 20MHz and max voltage of 45mv pk-pk from DC-20MHz at a fixed temperature on the package. For tester measurement $V_{DDQ} = V_{DD2}$ is assumed.
NOTE 12 Input slew rate over VdIVW Mask centered at Vcent_DQ(pin_mid).
NOTE 13 Rx mask defined for a one pin toggling with other DQ signals in a steady state.
NOTE 14 VIHL_AC does not have to be met when no transitions are occurring.
NOTE 15 The same voltage and temperature are applied to tDQS2DQ_rank2rank.
NOTE 16 tDQS2DQ_rank2rank parameter is applied to multi-ranks per byte lane within a package consisting of the same design dies.
NOTE 17 tDQS2DQ_rabk2rank support is specified here, but is not applicable to this product, which has a single rank.
NOTE 18 Unit UI = tCK(avg)min/2

ORDERING INFORMATION – Valid Part Numbers

IS 43 LQ 32256 _ B _ - 062 B L I

Temperature Range
I = Industrial (-40°C to +95°C)
A1 = Automotive, A1 Grade (-40°C to +95°C)
A2 = Automotive, A2 Grade (-40°C to +105°C)
A3 = Automotive, A3 Grade (-40°C to +125°C)

Packaging Content
L = Green Package (RoHS and TSCA Compliant, and Halogen-free)

Package Type
B = 200-ball BGA, 1.1mm max. thickness, with SAC305 balls (0.35mm diameter)
BH = 200-ball BGA, 1.2mm max. thickness, with SAC308-3Bi balls (0.4mm diameter)

Speed Grade
053 = 1866MHz
062 = 1600MHz

VDDQ
Blank = Regular VDDQ (LPDDR4)
L = Low VDDQ (LPDDR4X)

Die Generation
B = 2nd Generation

ECC support
Blank = No ECC Support

Density
32256 = 256Mb x 32 (8Gb)

Device Type
LQ = LPDDR4 DRAM

Product Family
43 = DDR DRAM
46 = Automotive DDR DRAM

ISSI Prefix
IS = Integrated Silicon Solution Inc.

Note: Optionally, the code -TR may be appended to a part number to indicate Tape & Reel packing format.

ORDERING INFORMATION, 256Mb x 32 LPDDR4

Industrial Range: Tc = -40°C to +95°C

Clock	Speed Grade	Order Part No.	Package
1600 MHz	-062	IS43LQ32256B-062BLI	200-ball BGA, with 1.1mm max. thickness, 0.35mm ball diameter
1866 MHz	-053	IS43LQ32256B-053BLI	200-ball BGA, with 1.1mm max. thickness, 0.35mm ball diameter

Automotive, A1 Range: Tc = -40°C to +95°C

Clock	Speed Grade	Order Part No.	Package
1600 MHz	-062	IS46LQ32256B-062BLA1	200-ball BGA, with 1.1mm max. thickness, 0.35mm ball diameter
1866 MHz	-053	IS46LQ32256B-053BLA1	200-ball BGA, with 1.1mm max. thickness, 0.35mm ball diameter

Automotive, A2 Range: Tc = -40°C to +105°C

Clock	Speed Grade	Order Part No.	Package
1600 MHz	-062	IS46LQ32256B-062BLA2	200-ball BGA, with 1.1mm max. thickness, 0.35mm ball diameter
		IS46LQ32256B-062BHLA2	200-ball BGA, with 1.2mm max. thickness, 0.4mm ball diameter
1866 MHz	-053	IS46LQ32256B-053BLA2	200-ball BGA, with 1.1mm max. thickness, 0.35mm ball diameter
		IS46LQ32256B-053BHLA2	200-ball BGA, with 1.2mm max. thickness, 0.4mm ball diameter

Automotive, A3 Range: Tc = -40°C to +125°C

Clock	Speed Grade	Order Part No.	Package
1600 MHz	-062	IS46LQ32256B-062BLA3	200-ball BGA, with 1.1mm max. thickness, 0.35mm ball diameter
		IS46LQ32256B-062BHLA3	200-ball BGA, with 1.2mm max. thickness, 0.4mm ball diameter
1866 MHz	-053	IS46LQ32256B-053BLA3	200-ball BGA, with 1.1mm max. thickness, 0.35mm ball diameter
		IS46LQ32256B-053BHLA3	200-ball BGA, with 1.2mm max. thickness, 0.4mm ball diameter

Note:
1. All products listed above are green. This refers to the package being RoHS Compliant, Halogen-free and TSCA Compliant.
2. Optionally, the code -TR may be appended to a part number to indicate Tape & Reel packing format.

ORDERING INFORMATION, 256Mb x 32 LPDDR4X

Industrial Range: Tc = -40°C to +95°C

Clock	Speed Grade	Order Part No.	Package
1600 MHz	-062	IS43LQ32256BL-062BLI	200-ball BGA, with 1.1mm max. thickness, 0.35mm ball diameter
1866 MHz	-053	IS43LQ32256BL-053BLI	200-ball BGA, with 1.1mm max. thickness, 0.35mm ball diameter

Automotive, A1 Range: Tc = -40°C to +95°C

Clock	Speed Grade	Order Part No.	Package
1600 MHz	-062	IS46LQ32256BL-062BLA1	200-ball BGA, with 1.1mm max. thickness, 0.35mm ball diameter
1866 MHz	-053	IS46LQ32256BL-053BLA1	200-ball BGA, with 1.1mm max. thickness, 0.35mm ball diameter

Automotive, A2 Range: Tc = -40°C to +105°C

Clock	Speed Grade	Order Part No.	Package
1600 MHz	-062	IS46LQ32256BL-062BLA2	200-ball BGA, with 1.1mm max. thickness, 0.35mm ball diameter
		IS46LQ32256BL-062BHLA2	200-ball BGA, with 1.2mm max. thickness, 0.4mm ball diameter
1866 MHz	-053	IS46LQ32256BL-053BLA2	200-ball BGA, with 1.1mm max. thickness, 0.35mm ball diameter
		IS46LQ32256BL-053BHLA2	200-ball BGA, with 1.2mm max. thickness, 0.4mm ball diameter

Automotive, A3 Range: Tc = -40°C to +125°C

Clock	Speed Grade	Order Part No.	Package
1600 MHz	-062	IS46LQ32256BL-062BLA3	200-ball BGA, with 1.1mm max. thickness, 0.35mm ball diameter
		IS46LQ32256BL-062BHLA3	200-ball BGA, with 1.2mm max. thickness, 0.4mm ball diameter
1866 MHz	-053	IS46LQ32256BL-053BLA3	200-ball BGA, with 1.1mm max. thickness, 0.35mm ball diameter
		IS46LQ32256BL-053BHLA3	200-ball BGA, with 1.2mm max. thickness, 0.4mm ball diameter

Note:
1. All products listed above are green. This refers to the package being RoHS Compliant, Halogen-free and TSCA Compliant.
2. Optionally, the code -TR may be appended to a part number to indicate Tape & Reel packing format.

PACKAGE INFORMATION: 200-ball FBGA

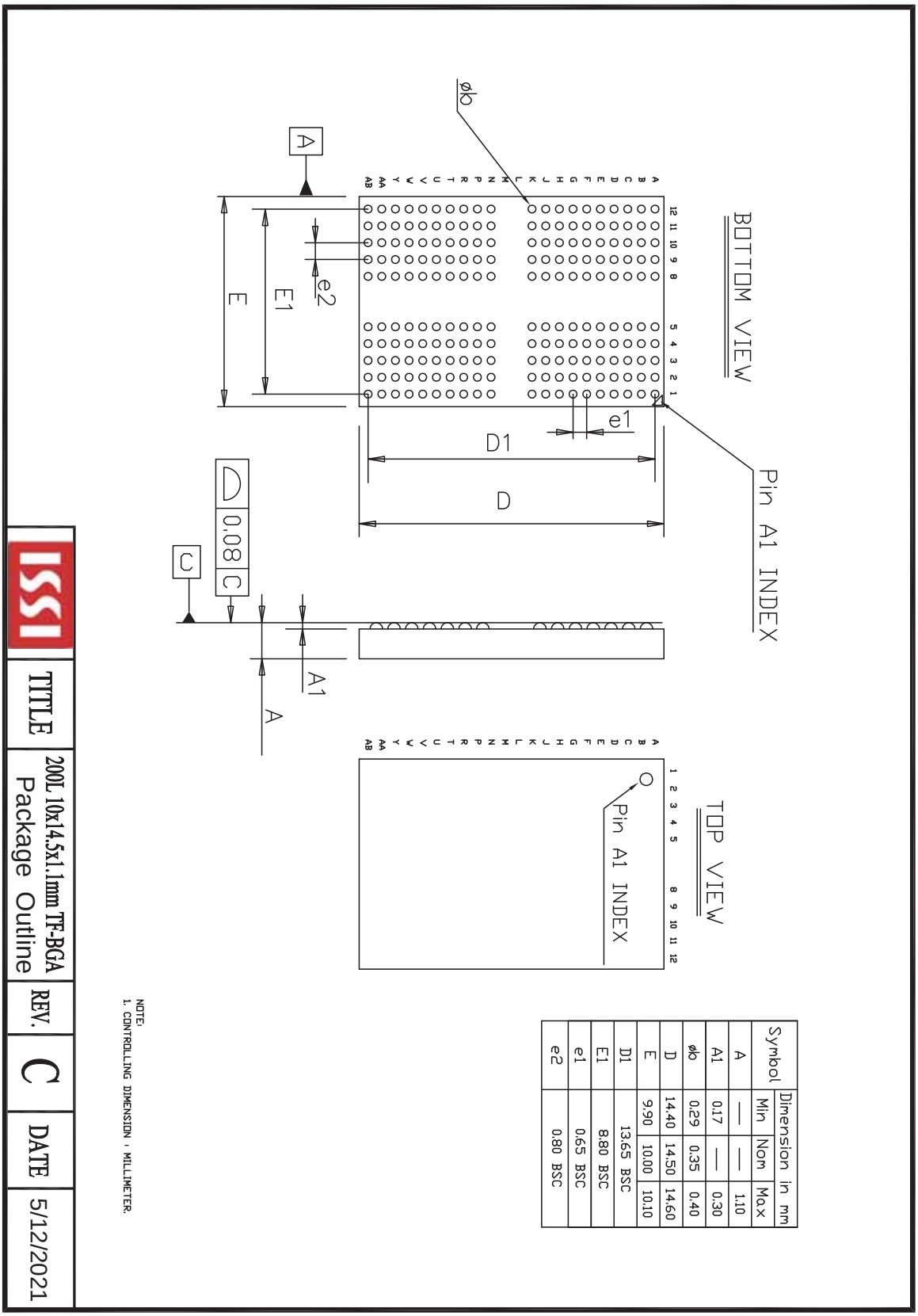

Symbol	Dimension in mm		
	Min	Nom	Max
A	—	—	1.10
A1	0.17	—	0.30
øb	0.29	0.35	0.40
D	14.40	14.50	14.60
E	9.90	10.00	10.10
D1	13.65 BSC		
E1	8.80 BSC		
e1	0.65 BSC		
e2	0.80 BSC		

PACKAGE INFORMATION: 200-ball FBGA

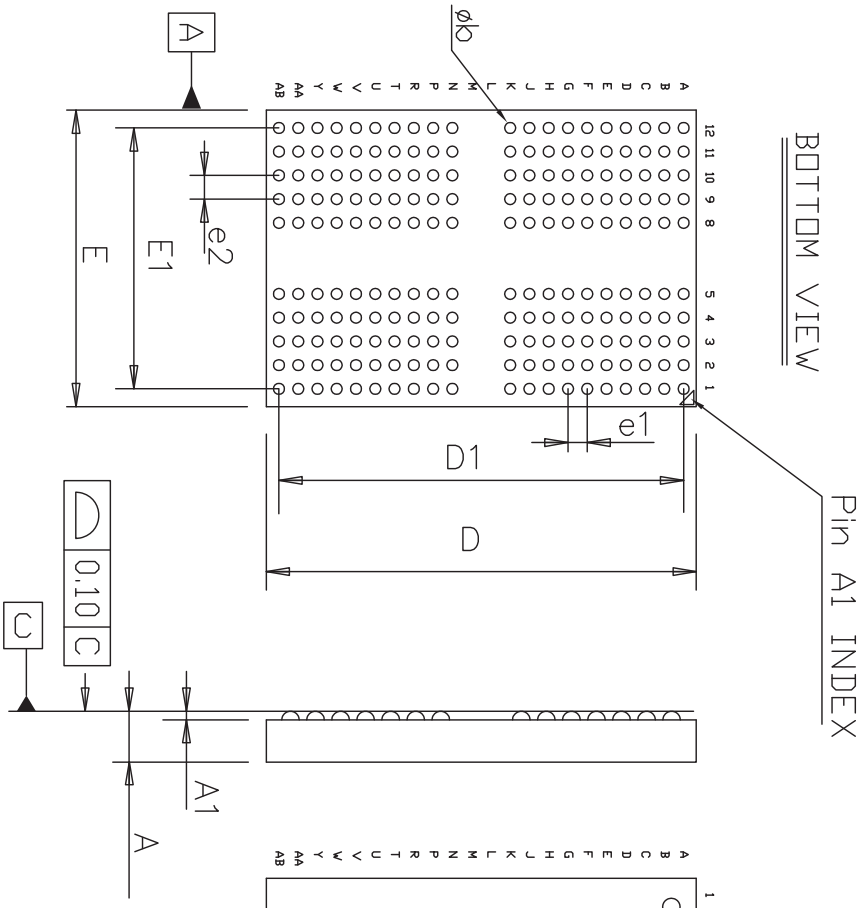

Symbol	Dimension in mm		
	Min	Nom	Max
A	—	—	1.20
A1	0.20	—	0.35
øb	0.35	0.40	0.45
D	14.40	14.50	14.60
E	9.90	10.00	10.10
D1	13.65 BSC		
E1	8.80 BSC		
e1	0.65 BSC		
e2	0.80 BSC		

NOTE:
1. CONTROLLING DIMENSION : MILLIMETER.

TITLE	200L 10x14.5x1.2mm TF-BGA Package Outline	REV.	B	DATE	11/12/2024