XENSIV™ ISO 26262-compliant digital absolute pressure sensor

Features

- Dedicated low power monitoring (LPM) mode for battery monitoring applications (delta pressure threshold accuracy ±4%)
- High accuracy pressure sensing (±1.2 kPa), pressure range 45 to 200 kPa
- Operating ambient temperature range -40°C to 105°C
- Best-in class low-power consumption
- 10-, 12- or 14-bit resolution pressure and temperature values via SPI interface
- Integrated diagnosis features for signal path and signal processing
- Green and small 4.5 mm x 5.1 mm 8-pin DFN package
- ISO 26262 Safety Element out of Context for safety requirements up to ASIL B

AEC Qualified

Green

ISO 26262 compliant

Potential applications

- Automotive battery monitoring system (BMS)
- Automotive barometric air pressure sensor (BAP)
- Automotive mass air flow sensor (MAF)
- Automotive seat comfort system
- Industrial control
- Weather stations
- Altimeters

Product validation

Product validation according to AEC-Q103-002. Qualified for automotive applications.

Description

The KP467 is a high-performance, high-precision miniaturized digital absolute pressure sensor based on a capacitive sensing principle. It is surface micromachined with a monolithic integrated signal conditioning circuit.

The device converts physical pressure into a 10-, 12-, or 14-bit digital value and transmits the information via the SPI interface. In addition, a temperature sensor is integrated on chip. Based on the received SPI command, the 10-, 12- or 14-bit temperature information will also be transmitted via the SPI interface.

Besides a power-down mode, the KP467 also implements a specific low-power monitoring (LPM) mode which allows usage of the sensor in battery monitoring applications in order to detect pressure pulses caused by thermal runaway events. The integrated diagnostics are a special reliability feature, which allows testing the sensor cells as well as the signal path. This diagnosis can be triggered with an SPI command.

Product type	Package	Marking	Ordering code
KP467	PG-DFN-8-1	KP467	SP005580018

Table of contents

Table of contents . . . 2
1 Block diagram . . . 4
2 Pin configuration . . . 5
3 General product characteristics . . . 6
3.1 Absolute maximum ratings . . . 6
3.2 Functional range . . . 7
4 Product features . . . 8
4.1 Characteristics . . . 8
4.1.1 Electrical characteristics . . . 8
4.1.2 Low power monitoring characteristics . . . 9
4.1.3 Transfer function pressure characteristics . . . 10
4.1.4 Transfer function temperature characteristics . . . 11
4.1.5 Undervoltage range characteristics . . . 11
4.1.6 SPI timing . . . 11
4.2 Functional description . . . 14
4.2.1 Transfer function pressure . . . 14
4.2.2 Transfer function temperature . . . 16
4.2.3 Power-down mode . . . 18
4.2.3.1 Entering power-down mode . . . 18
4.2.3.2 Exiting power-down mode . . . 18
4.2.4 Low power monitoring mode . . . 19
4.2.4.1 Low power monitoring (one threshold) . . . 19
4.2.4.2 Low power monitoring (two thresholds) . . . 20
4.2.4.3 Interval timer . . . 22
4.2.4.4 Wake-up event . . . 22
4.2.4.5 Entering low power monitoring mode . . . 22
4.2.4.6 Exiting low power monitoring mode . . . 22
4.2.4.7 Delta pressure accuracy . . . 23
4.2.4.8 Calculation of overall current consumption in LPM mode . . . 23
4.2.4.9 Low power monitoring configuration parameters . . . 24
4.2.5 Serial interface . . . 25
4.2.5.1 EEPROM programmability . . . 26
4.2.5.2 Commands . . . 26
4.2.5.3 Command behavior . . . 27
4.2.5.4 Response structure . . . 27
4.2.5.5 Parity . . . 29
4.2.5.6 Command definition (16-bit) . . . 30
4.2.5.7 Command definition (8-bit) . . . 31

4.2.5.8 Communication error . . . 32
4.2.5.9 Identifier response definition . . . 33
4.2.5.10 Single device operation . . . 33
4.2.5.11 Daisy chain operation (4-pin, full-duplex) . . . 33
4.2.5.12 SPI configuration parameters . . . 35
4.2.6 Diagnosis . . . 37
4.2.6.1 LPM diagnosis . . . 38
4.2.6.2 Diagnosis reset . . . 39
4.2.6.2.1 Reset-bit = '1' . . . 39
4.2.6.2.2 Reset-bit = '0' . . . 39
4.2.6.3 Pressure out of range . . . 40
4.2.6.4 Diag1 . . . 40
4.2.6.5 Diag2 . . . 40
4.2.6.6 EEPROM check . . . 41
4.2.7 Calculation of overall current consumption . . . 41
4.2.8 Start-up behavior . . . 42
5 Application information . . . 43
6 Package . . . 45
6.1 Identification code . . . 46
7 Revision history . . . 47
Disclaimer . . . 48

1 Block diagram

The figure below shows the functional block diagram of the device.

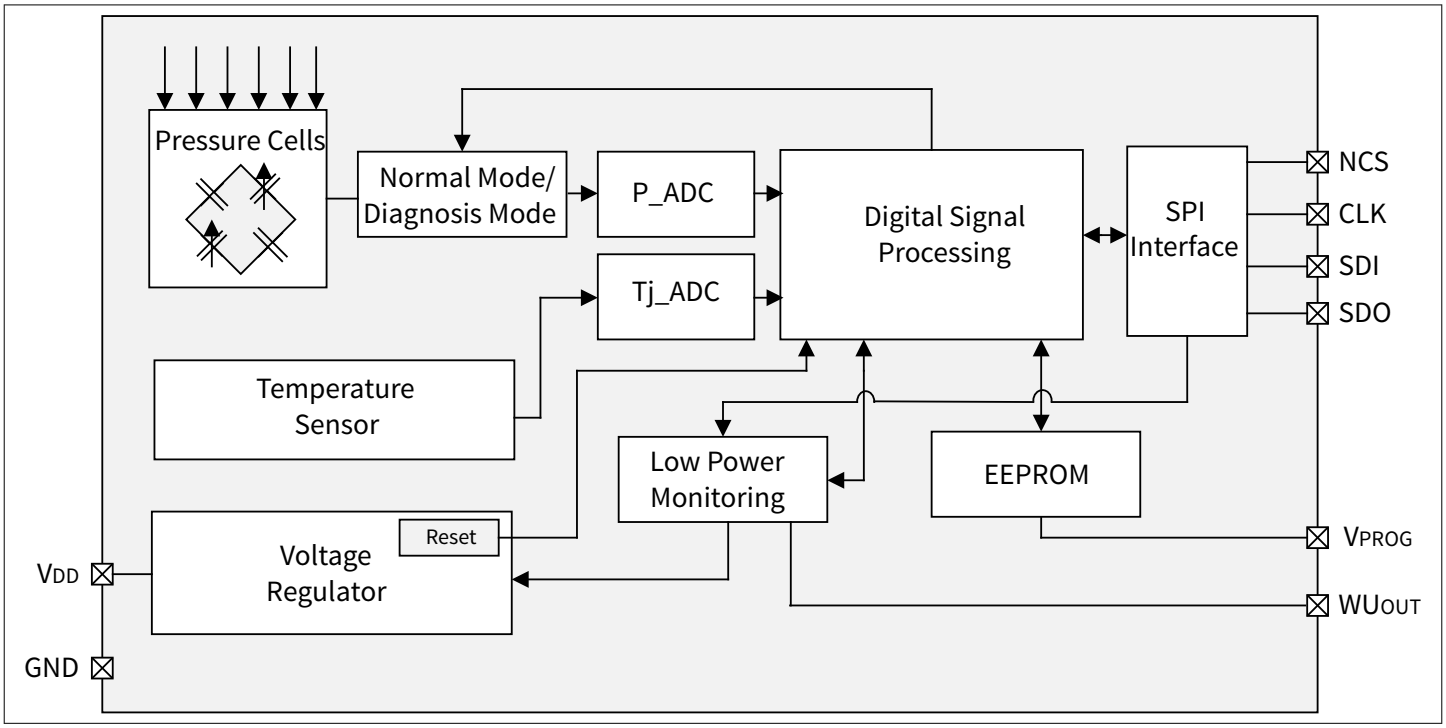

Figure 1 Functional block diagram

2 Pin configuration

The figure below defines the pin configuration of the device.

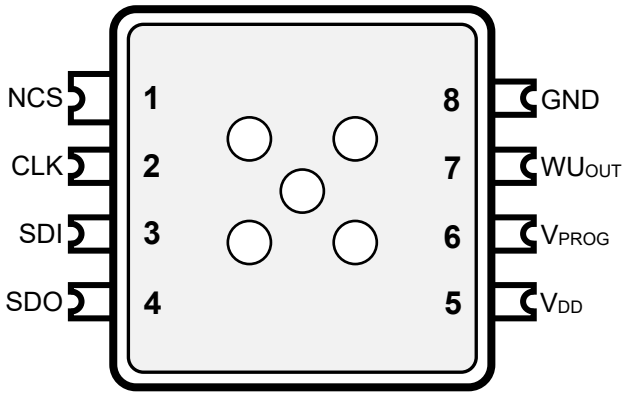

Figure 2 Pin configuration (top view, figure not to scale)

The table below shows the pin description.

Table 1 Pin description

Pin No.	Name	Function	Comment
1	NCS	Not-Chip-Select (active-low)	Communication is enabled when NCS is low
2	CLK	Serial Clock	External clock for serial communication
3	SDI	Serial Data In	Serial data input (such as from a controller)
4	SDO	Serial Data Out	Tri-state serial data output
5	V_{DD}	Supply voltage	–
6	V_{PROG}	Programming Voltage	Only required during EEPROM programming and Programming Mode entering
7	WU_{OUT}	Wake-up pin	Digital output to wake up such as microcontroller
8	GND	Ground	–

3 General product characteristics

3.1 Absolute maximum ratings

Table 2 Absolute maximum ratings

Parameter	Symbol	Values			Unit	Note or condition
		Min.	Typ.	Max.		
Maximum supply voltage range	V_{DD_max}	-0.3	–	5.5	V	
Maximum voltage range on any pin	V_{in_max}	-0.3	–	5.5	V	
Maximum voltage range on any pin (short term)	$V_{in_max_short}$	-0.3	–	6.0	V	Limited time: Max. 300 s
Maximum voltage range at output pins	V_{out_max}	-0.3	–	V_{DD} + 0.3	V	
Storage temperature	T_S	-40	–	150	°C	
Maximum input pressure range	P_{amb_max}	10	–	300	kPa	
Maximum input pressure range (short term)	$P_{amb_max_short}$	10	–	600	kPa	Limited time: Max. 300 s
ESD robustness - HBM	V_{ESD_HBM}	-2000	–	2000	V	According to ANSI/ESDA/JEDEC JS-001
ESD robustness pins 1, 4, 5, 8 - CDM	V_{ESD_CDMc}	-750	–	750	V	According to ANSI/ESDA/JEDEC JS-002
ESD robustness pins 2, 3 ,6, 7 - CDM	V_{ESD_CDMo}	-500	–	500	V	According to ANSI/ESDA/JEDEC JS-002

***Attention**: Stresses above those listed under "Absolute maximum ratings" may cause permanent damage to the device. This is a stress rating only and functional operation of the device at these or any other conditions above those indicated in the section "functional range" of this data sheet is not implied. Furthermore, only single error cases are assumed. More than one stress/error case may also damage the device. Exposure to absolute maximum rating conditions for extended periods may affect device reliability. During absolute maximum rating overload conditions the voltage on VDD pins with respect to ground (GND) must not exceed the values defined by the absolute maximum ratings. Lifetime statements are an anticipation based on an extrapolation of Infineon's qualification test results. The actual lifetime of a component depends on its form of application and type of use etc. and may deviate from such statement. Lifetime statements shall in no event extend the agreed warranty period.*

3.2 Functional range

The following functional range must not be exceeded to ensure correct operation of the device. All parameters specified in the following sections refer to these operation conditions unless otherwise indicated.

Table 3 Functional range

Parameter	Symbol	Values			Unit	Note or condition
		Min.	Typ.	Max.		
Supply voltage	V_{DD}	3.0	–	5.25	V	
Supply undervoltage	V_{DD_UV}	V_{UVR_max}	–	V_{DD_min}	V	Undervoltage range, reduced performance (see Characteristics in Undervoltage Range)
Supply voltage power up/power down gradient	V_{grad}	1E-5	–	1E4	V/ms	
Input voltage for high level at pins NCS, CLK & SDI	V_{high_in}	1.8	–	V_{DD} + 0.3	V	Not valid in Power-Down mode
Input voltage for high level at pins NCS, CLK & SDI (Power-Down/LPM mode)	$V_{high_in_pd}$	2.3	–	V_{DD} + 0.3	V	Not valid during normal operation
Input voltage for low level at pins NCS, CLK & SDI	V_{low_in}	-0.3	–	0.8	V	
Output voltage for low level at pin SDO	V_{low_out}	–	–	0.4	V	Sink current at pin SDO less than 2.0 mA
Output voltage for high level at pin SDO	V_{high_out}	V_{DD} - 0.4	–	V_{DD}	V	Source current at pin SDO less than 2.0 mA
Ambient operating temperature range	T_a	-40	–	105	°C	
Thermal resistance (junction-ambient)	R_{thJA}	250	–	350	K/W	Thermal resistance between die and T_{amb} (measured acc. JESD51-2)

4 Product features

4.1 Characteristics

4.1.1 Electrical characteristics

Table 4 Electrical characteristics

Parameter	Symbol	Values			Unit	Note or condition
		Min.	Typ.	Max.		
Undervoltage reset/ release level	V_{UVR}	2.1	–	2.7	V	
Undervoltage reset hysteresis	V_{UVR_Hyst}	100	–	300	mV	
Supply current into VDD	I_{VDD}	–	–	3.5	mA	Without SPI communication
Supply current into VDD during power-down mode (quiescent current)	I_{VDD_PD}	–	–	10	µA	
Supply current into VDD during low power monitoring mode (quiescent current)	I_{VDD_LP}	–	–	20	µA	
Pressure signal path settling time	t_{path_pres}	–	–	5	ms	Pressure accuracy within specification
Temperature signal path settling time	t_{path_temp}	–	–	5	ms	Temperature accuracy within specification
Start-up time (with self-diagnosis)	$t_{start\text{-}up_wd}$	–	–	10	ms	• No SPI communication possible • After $t_{start\text{-}up_wd}$ within full specification • Configuration Parameter $power_up_{diag_en}$ = 1
Start-up time (without self-diagnosis)	$t_{start\text{-}up_wod}$	–	–	5	ms	No SPI communication possible After $t_{start\text{-}up_wod}$ within full specification Configuration Parameter $power_up_{diag_en}$ = 0
Power down wake-up time (with self diagnosis)	$t_{PD_wake\text{-}up_wd}$	–	–	10	ms	Configuration Parameter wup_{diag_en} = 1

(table continues...)

Table 4 (continued) Electrical characteristics

Parameter	Symbol	Values			Unit	Note or condition
		Min.	Typ.	Max.		
Power down wake-up time (without self diagnosis)	$t_{PD_wake\text{-}up_wod}$	–	–	5	ms	Configuration Parameter wup_{diag_en} = 0
Capacitive load at pins NCS, CLK & SDI	C_{load_in}	–	–	14	pF	
Capacitive load at pin SDO	C_{load_out}	–	–	19	pF	
Tri-state leakage current	I_{SDO}	-5	–	5	µA	NCS = high V_{DD} = 5 V
Hysteresis of input voltage at pins NCS, CLK & SDI	V_{SPI_Hys}	100	–	–	mV	
Current sink for NCS, CLK & SDI (each pin) - Vlow_in	I_{SPI_in}	-100	–	-5	µA	V_{low_in} = 0 V No back biasing Not valid in Power-Down mode
Current sink for NCS, CLK & SDI (each pin) - Vhigh_in	I_{SPI_in}	–	–	5	µA	V_{high_in} = 5 V No back biasing
Delta pressure noise RMS	Δp_{noise_RMS}	–	–	50	Pa	Root-mean-square of noise distribution[1)]

1) RMS means that from a statistical distribution of measurements, 68% of the values deviate by less than the RMS value from the mean value of the distribution. Noise peak limit values can be calculated as multiples of the RMS value, based on the desired confidence level. For example: For a noise peak limit at 99.99% confidence level, the RMS value is multiplied by a factor of 4.

4.1.2 Low power monitoring characteristics

Table 5 Low power monitoring characteristics

Parameter	Symbol	Values			Unit	Note or condition
		Min.	Typ.	Max.		
Timing accuracy of reading repetition	$acc_{t_PD_pread}$	-30	–	30	%	
Duration of pressure reading during low power monitoring mode	t_{PD_pread}	–	–	1001	µs	Average pressure reading time
Wake-up pin high state voltage level	V_{high_wake}	V_{DD} - 0.4 V	–	V_{DD}	V	Source current at pin WU_{OUT} less than 2.0 mA

(table continues...)

Table 5 **(continued) Low power monitoring characteristics**

Parameter	Symbol	Values			Unit	Note or condition
		Min.	Typ.	Max.		
Wake-up pin low state voltage level	V_{low_wake}	–	–	0.4	V	Sink current at pin WU_{OUT} less than 2.0 mA
Delta pressure threshold accuracy	$acc_{\Delta pi_threshold}$	-4	–	4	%	i=1 or 2 Delta pressure threshold accuracy depends on the threshold values used ($\Delta p_{threshold1}$ or $\Delta p_{threshold2}$).
Time entering LPM mode	t_{enter_LPM}	–	–	1	ms	From the end of the SPI frame.

4.1.3 Transfer function pressure characteristics

Table 6 **Transfer function pressure characteristics**

Parameter	Symbol	Values			Unit	Note or condition
		Min.	Typ.	Max.		
Ambient operating pressure range	p_{amb}	45	–	200	kPa	
Accuracy pressure mid temperature range	acc_{p_Tmid}	-1.2	–	1.2	kPa	T_a = 0°C to 85°C; additional drift from specifications for 24 h after reflow soldering.
Accuracy pressure low temperature range	acc_{p_Tlow}	-1.6	–	1.6	kPa	T_a = -40°C; additional drift from specifications for 24 h after reflow soldering.
Accuracy pressure high temperature range	acc_{p_Thigh}	-1.6	–	1.6	kPa	T_a = 105°C; additional drift from specifications for 24 h after reflow soldering.

***Note**:* *Drift after reflow soldering or when device is exposed to extreme temperature conditions for a maximum duration of 24 h after reflow soldering in standard conditions (25°C, 100 kPa).*

Attention**:* ***The device is sensitive to light incident to the pressure port. All specifications are valid for an illuminance of less than 1 lx.

4.1.4 Transfer function temperature characteristics

Table 7 Transfer function temperature characteristics

Parameter	Symbol	Values			Unit	Note or condition
		Min.	Typ.	Max.		
Accuracy temperature low	acc_{T_low}	-5.0	–	5.0	°C	T_a = -40°C to 25°C; After device self-heating within acc_{T_low}
Accuracy temperature center	acc_{T_cen}	-3.0	–	3.0	°C	T_a = 25°C to 85°C; After device self-heating within acc_{T_cen}
Accuracy temperature high	acc_{T_high}	-3.25	–	3.25	°C	T_a = 85°C to T_{a_max}; After device self-heating within acc_{T_high}

4.1.5 Undervoltage range characteristics

Table 8 Undervoltage range characteristics

Parameter	Symbol	Values			Unit	Note or condition
		Min.	Typ.	Max.		
Clock frequency of SPI interface (push-pull, undervoltage range)	$f_{SPI,PP}$	0.1	–	2.5	MHz	Valid for push-pull configuration of SDO; Undervoltage range V_{DD_UV}
Accuracy pressure (undervoltage range)	acc_p	-6.0	–	6.0	kPa	T_a = -40°C to 105°C Undervoltage range V_{DD_UV}
Output voltage for low level at pin SDO (undervoltage range)	V_{low_out}	–	–	0.4	V	Sink current at pin SDO less than 1.5 mA; Undervoltage range V_{DD_UV}
Output voltage for high level at pin SDO (undervoltage range)	V_{high_out}	V_{DD_UV} - 0.4	–	V_{DD_UV}	V	Source current at pin SDO less than 1.5 mA; Undervoltage range V_{DD_UV}

4.1.6 SPI timing

Table 9 SPI timing

Parameter	Symbol	Values			Unit	Note or condition
		Min.	Typ.	Max.		
Clock frequency of SPI interface (push-pull)	$f_{SPI,PP}$	0.1	–	5	MHz	Valid for SDO push-pull configuration

(table continues...)

Table 9 (continued) SPI timing

Parameter	Symbol	Values			Unit	Note or condition
		Min.	Typ.	Max.		
Clock frequency of SPI interface (open-drain)	$f_{SPI,OD}$	0.1	–	0.5	MHz	Valid for SDO open-drain configuration. Depends on output load. Max value is valid for load capacitance of 50 pF or less and pull-up resistor of nominal 5 kΩ or less.
Transition speed at SDO (low capacitive load)	t_{SDO_trans}	5	–	30	ns	V_{DD} = 5 V C_{load} = 50 pF Rising edge = 20% - 80% Falling edge = 80% - 20% Only valid for falling edge if SDO_{config} set to open-drain
Transition speed at SDO (high capacitive load)	t_{SDO_trans}	5	–	50	ns	V_{DD} = 5 V C_{load} = 150 pF Rising edge = 20% - 80% Falling edge = 80% - 20% Only valid for falling edge if SDO_{config} set to open-drain
Clock high time (full-duplex)	$t_{clh,fd}$	75	–	–	ns	Valid for full-duplex SPI configuration
Clock low time (full-duplex)	$t_{cll,fd}$	75	–	–	ns	Valid for full-duplex SPI configuration
Clock high time (half-duplex)	$t_{clh,hd}$	400	–	–	ns	Valid for half-duplex SPI configuration
Clock low time (half-duplex)	$t_{cll,fd}$	400	–	–	ns	Valid for half-duplex SPI configuration
NCS filter time	t_{fNCS}	10	–	60	ns	Pulses below the NCS filter time will be ignored
Delay between NCS falling edge and SDO active	t_{csdv}	–	–	75	ns	Only valid for full duplex SPI
Delay between CLK rising edge and start SDO data	t_{pcld}	–	–	50	ns	CLK to data at 10% of SDO rising edge C_{load} = 120 pF
Delay between CLK low and start NCS low	t_{sclch}	75	–	–	ns	
Delay between NCS low and rising edge 1st CLK pulse	t_{hclcl}	75	–	–	ns	

(table continues...)

Table 9 (continued) SPI timing

Parameter	Symbol	Values			Unit	Note or condition
		Min.	Typ.	Max.		
Time between start SDI data and falling edge CLK	t_{scld}	15	–	–	ns	
Time between falling edge CLK and end SDI data	t_{hcld}	15	–	–	ns	
Delay between falling edge last CLK pulse and rising edge NCS	t_{sclcl}	100	–	–	ns	
Delay between rising edge NCS and rising edge CLK pulse	t_{hclch}	100	–	–	ns	
Delay between rising edge NCS and end SDO data	t_{pchdz}	–	–	75	ns	
Time between rising edge NCS and falling edge next NCS	t_{onncs}	300	–	–	ns	
Minimum input rise/ fall time	t_{SPI_switch}	–	–	2	ns	20% - 80% at SDI, CLK, NCS
Maximum output over-/undershoot	V_{SDO_ovun}	-200	–	200	mV	V_{DD} = 5 V C_{load} = 150 pF Trace inductance < 400 nH
Valid pressure/ temperature value after trigger diagnostic command	t_{diag_wait}	–	–	10	ms	
Time between diagnosis command and entering LPM mode	$t_{LPM_diag_wait}$	–	–	2	ms	

4.2 Functional description

4.2.1 Transfer function pressure

The KP46x pressure calibration is adjusted with the parameters S_p and $offs_p$. The formula to calculate the ambient pressure based on these parameters and the sensor output is shown below:

$$p_{amb} = \frac{(out_p - offs_p)}{S_p} \tag{1}$$

The KP46x device is fully calibrated on delivery. The sensor has a linear transfer function between the applied pressure and the digital output signal. The device provides an absolute pressure value by triggering the Acquire pressure command 8 bits or Acquire pressure command 16 bits.

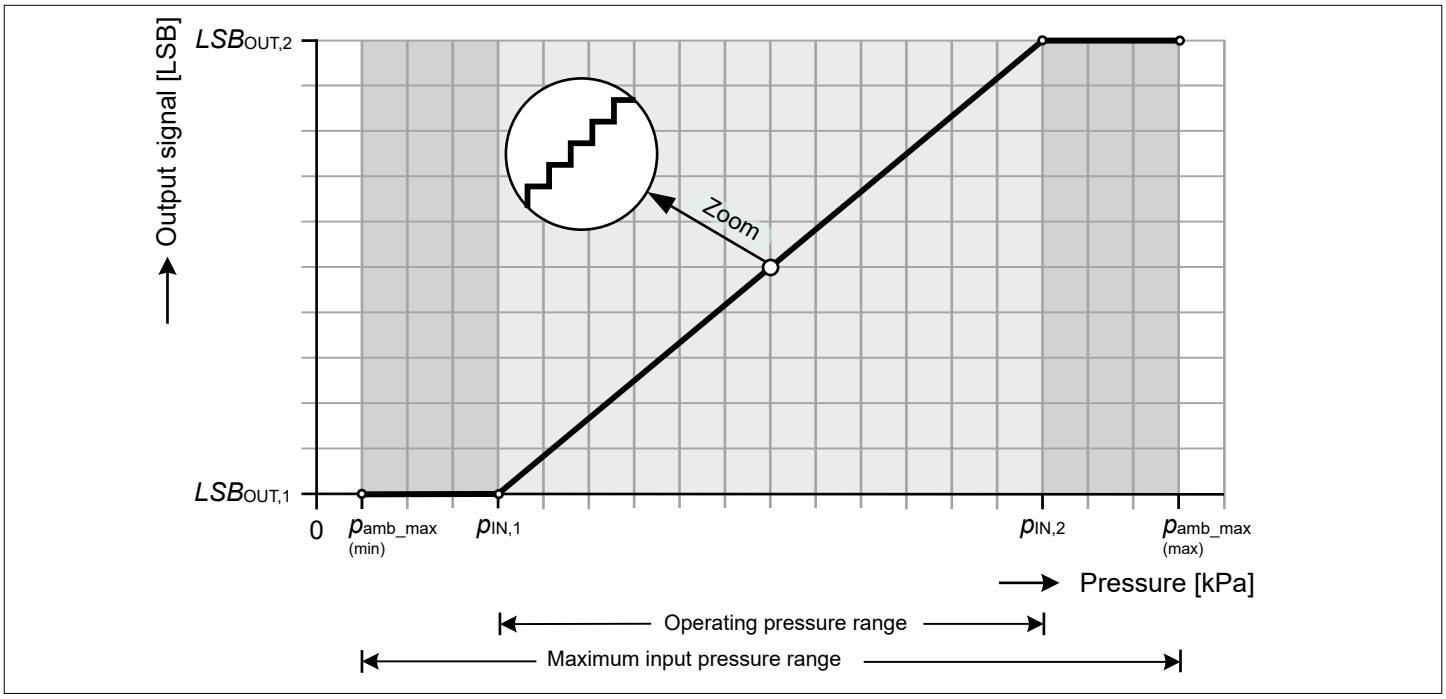

Figure 3 **Pressure transfer function**

Table 10 **Pressure transfer function characteristics (10-bit)**

Pressure			Output code		
Symbol	**Values (Typ.)**	**Unit**	**Symbol**	**Values (Typ.)**	**Unit**
$p_{IN,1}$	45	kPa	$LSB_{OUT,1}$	0	LSB
$p_{IN,2}$	200	kPa	$LSB_{OUT,2}$	1023	LSB

Table 11 **Gain and offset pressure transfer function (10-bit)**

Gain and offset		
Symbol	**Values (Typ.)**	**Unit**
S_p	6.60	LSB/kPa
$offs_p$	-297	LSB

Table 12 **Pressure transfer function characteristics (12-bit)**

Pressure			Output code		
Symbol	**Values (Typ.)**	**Unit**	**Symbol**	**Values (Typ.)**	**Unit**
$p_{IN,1}$	45	kPa	$LSB_{OUT,1}$	0	LSB
$p_{IN,2}$	200	kPa	$LSB_{OUT,2}$	4095	LSB

Table 13 **Gain and offset pressure transfer function (12-bit)**

Gain and offset		
Symbol	**Values (Typ.)**	**Unit**
S_p	26.42	LSB/kPa
$offs_p$	-1189	LSB

Table 14 **Pressure transfer function characteristics (14-bit)**

Pressure			Output code		
Symbol	**Values (Typ.)**	**Unit**	**Symbol**	**Values (Typ.)**	**Unit**
$p_{IN,1}$	45	kPa	$LSB_{OUT,1}$	0	LSB
$p_{IN,2}$	200	kPa	$LSB_{OUT,2}$	16383	LSB

Table 15 **Gain and offset pressure transfer function (14-bit)**

Gain and fffset		
Symbol	**Values (Typ.)**	**Unit**
S_p	105.70	LSB/kPa
$offs_p$	-4756	LSB

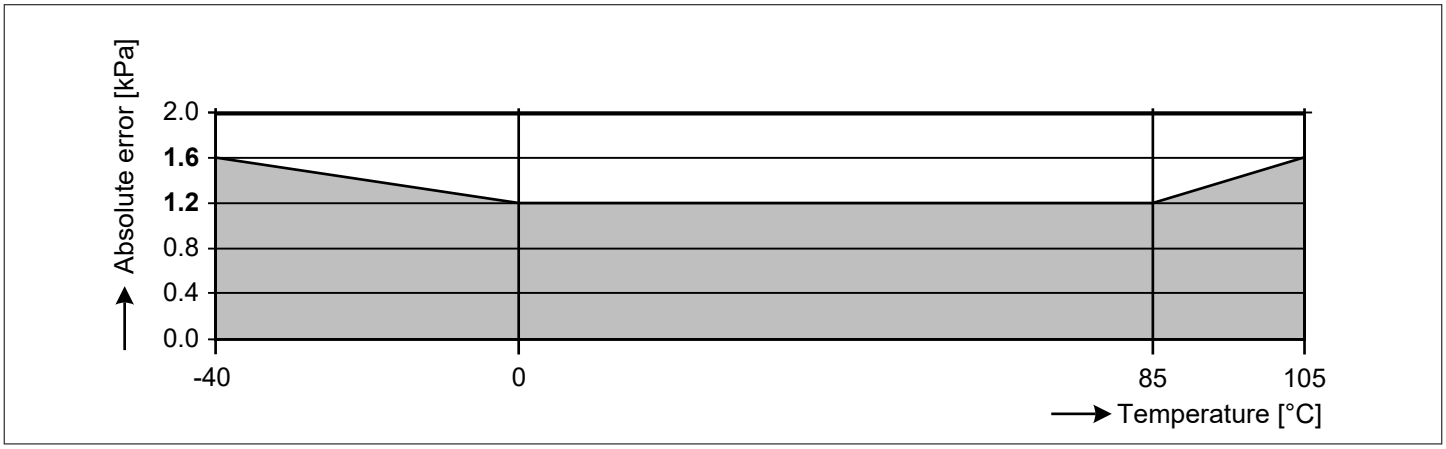

Figure 4 **Accuracy for pressure acquisition**

4.2.2 Transfer function temperature

The KP46x temperature calibration is adjusted with the parameters S_T and $offs_T$. The formula to calculate the ambient temperature based on these parameters and the sensor output is shown below:

$$T_{amb} = \frac{(out_T - offs_T)}{S_T} \tag{2}$$

The KP46x device is fully calibrated on delivery. The sensor has a linear transfer function between the applied temperature and the digital output signal. The device provides an ambient temperature value by triggering the Acquire temperature command.

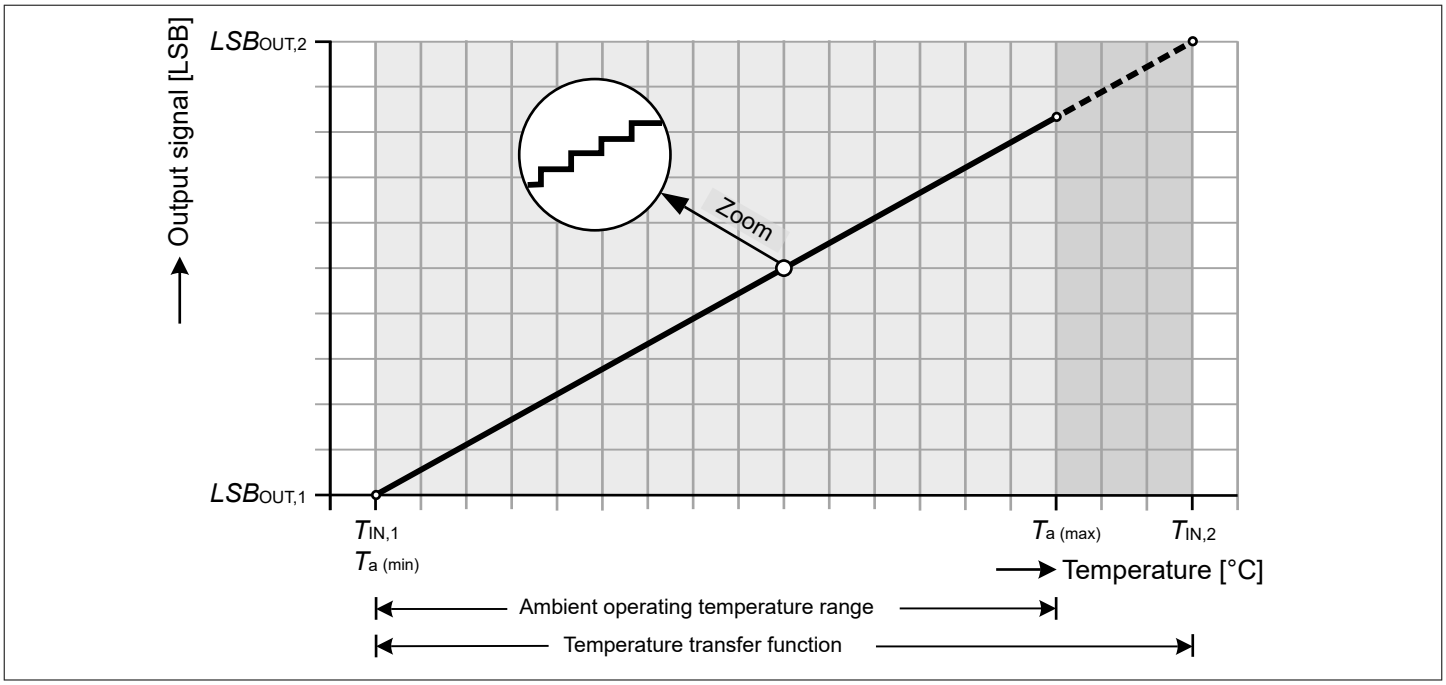

Figure 5 **Temperature transfer function**

Table 16 **Temperature transfer function characteristics (10-bit)**

kp25x$_{t_compat}$	*vdd*$_{range}$	V_{DD}		Temperature			Output code		
Bit	**Bit**	**Values (Typ.)**	**Unit**	**Symbol**	**Values (Typ.)**	**Unit**	**Symbol**	**Values (Typ.)**	**Unit**
0	0	3.3	V	$T_{IN,1}$	-40	°C	$LSB_{OUT,1}$	0	LSB
				$T_{IN,2}$	125	°C	$LSB_{OUT,2}$	1023	LSB
	1	5.0	V	$T_{IN,1}$	-40	°C	$LSB_{OUT,1}$	0	LSB
				$T_{IN,2}$	125	°C	$LSB_{OUT,2}$	1023	LSB
1	-	3.3	V	$T_{IN,1}$	-38.5	°C	$LSB_{OUT,1}$	0	LSB
				$T_{IN,2}$	126.5	°C	$LSB_{OUT,2}$	1023	LSB
	-	5.0	V	$T_{IN,1}$	-40	°C	$LSB_{OUT,1}$	0	LSB
				$T_{IN,2}$	125	°C	$LSB_{OUT,2}$	1023	LSB

Table 17 Gain and offset of temperature transfer function (10-bit)

$kp25x_{t_compat}$	V_{DD}		Gain and offset		
Bit	**Values (Typ.)**	**Unit**	**Symbol**	**Values (Typ.)**	**Unit**
1	3.3 / 5.0	V	S_T	6.2	LSB/°C
	5.0		$offs_{T_5.0}$	248	LSB
	3.3		$offs_{T_3.3}$	238.7	LSB
0	3.3 / 5.0	V	S_T	6.2	LSB/°C
			$offs_T$	248	LSB

Table 18 Temperature transfer function characteristics (12-bit)

$kp25x_{t_compat}$	vdd_{range}	V_{DD}		Temperature			Output code		
Bit	**Bit**	**Values (Typ.)**	**Unit**	**Symbol**	**Values (Typ.)**	**Unit**	**Symbol**	**Values (Typ.)**	**Unit**
0	0	3.3	V	$T_{IN,1}$	-40	°C	$LSB_{OUT,1}$	0	LSB
				$T_{IN,2}$	125	°C	$LSB_{OUT,2}$	4095	LSB
	1	5.0	V	$T_{IN,1}$	-40	°C	$LSB_{OUT,1}$	0	LSB
				$T_{IN,2}$	125	°C	$LSB_{OUT,2}$	4095	LSB
1	-	3.3	V	$T_{IN,1}$	-38.5	°C	$LSB_{OUT,1}$	0	LSB
				$T_{IN,2}$	126.5	°C	$LSB_{OUT,2}$	4095	LSB
	-	5.0	V	$T_{IN,1}$	-40	°C	$LSB_{OUT,1}$	0	LSB
				$T_{IN,2}$	125	°C	$LSB_{OUT,2}$	4095	LSB

Table 19 Gain and offset of temperature transfer function (12-bit)

$kp25x_{t_compat}$	V_{DD}		Gain and offset		
Bit	**Values (Typ.)**	**Unit**	**Symbol**	**Values (Typ.)**	**Unit**
1	3.3 / 5.0	V	S_T	24.82	LSB/°C
	5.0		$offs_{T_5.0}$	992.73	LSB
	3.3		$offs_{T_3.3}$	955.5	LSB
0	3.3 / 5.0	V	S_T	24.82	LSB/°C
			$offs_T$	992.73	LSB

Table 20 Temperature transfer function characteristics (14-bit)

$kp25x_{t_compat}$	vdd_{range}	V_{DD}		Temperature			Output code		
Bit	**Bit**	**Values (Typ.)**	**Unit**	**Symbol**	**Values (Typ.)**	**Unit**	**Symbol**	**Values (Typ.)**	**Unit**

(table continues...)

Table 20 (continued) Temperature transfer function characteristics (14-bit)

$kp25x_{t_compat}$	vdd_{range}	V_{DD}		Temperature			Output code		
0	0	3.3	V	$T_{IN,1}$	-40	°C	$LSB_{OUT,1}$	0	LSB
				$T_{IN,2}$	125	°C	$LSB_{OUT,2}$	16383	LSB
	1	5.0	V	$T_{IN,1}$	-40	°C	$LSB_{OUT,1}$	0	LSB
				$T_{IN,2}$	125	°C	$LSB_{OUT,2}$	16383	LSB
1	-	3.3	V	$T_{IN,1}$	-38.5	°C	$LSB_{OUT,1}$	0	LSB
				$T_{IN,2}$	126.5	°C	$LSB_{OUT,2}$	16383	LSB
	-	5.0	V	$T_{IN,1}$	-40	°C	$LSB_{OUT,1}$	0	LSB
				$T_{IN,2}$	125	°C	$LSB_{OUT,2}$	16383	LSB

Table 21 Gain and offset of temperature transfer function (14-bit)

$kp25x_{t_compat}$	V_{DD}		Gain and offset		
Bit	**Values (Typ.)**	**Unit**	**Symbol**	**Values (Typ.)**	**Unit**
1	3.3 / 5.0	V	S_T	99.29	LSB/°C
	5.0		$offs_{T_5.0}$	3971.64	LSB
	3.3		$offs_{T_3.3}$	3822.7	LSB
0	3.3 / 5.0	V	S_T	99.29	LSB/°C
			$offs_T$	3971.64	LSB

***Note**: The points $T_{IN,1}/LSB_{OUT,1}$ and $T_{IN,2}/LSB_{OUT,2}$ define the calibrated transfer function and not the operating range. The operating temperature range is defined by the parameter operating temperature T_a.*

4.2.3 Power-down mode

The KP46x has implemented a special power saving feature called the power-down mode. The sensor enters a power-down state where the power consumption is drastically reduced. For current consumption during power-down mode, see parameter I_{VDD_PD}.

4.2.3.1 Entering power-down mode

The device enters the power-down mode when the Trigger power-down mode command is received via the SPI interface.

4.2.3.2 Exiting power-down mode

To wake up the sensor from the power-down mode the NCS pin needs to be low during the rising edge of the CLK pin.

***Note**: If the sensor is in the power-down state then the next command triggers the wake-up process (NCS must be low in combination with a rising CLK edge).*

Depending on the configuration of wup_{diag_en} the user needs to wait the time $t_{PD_start\text{-}up_wd_max}$ or $t_{PD_start\text{-}up_wod_max}$ before sending the first SPI command (for example Acquire pressure command) to allow repowering of the sensor after the wake-up from power-down mode.

***Note**:* *The response of the sensor during this first command must be ignored in case a command was part of the NCS and CLK wake-up sequence. With the next SPI command, the response from the first command is returned.*

4.2.4 Low power monitoring mode

The KP46x has implemented a flexible and special low power pressure measurement which is called Low Power Monitoring (LPM) mode. It can be used for battery thermal runaway detection during parking with low power consumption. The LPM mode allows the sensor to continue pressure measurements with reduced power consumption while the microcontroller is also in a power-down state (sleep mode). If a delta pressure threshold is reached a wake-up signal is sent via the WU_{OUT} pin to wake up the microcontroller and react accordingly. In order to even increase the reliability of the thermal runaway detection, a LPM variant with two delta pressure thresholds can be configured. The wake-up pulse on the WU_{OUT} pin is also triggered at each power-up, after power-down/wake-up and in case of a detected diagnosis error during LPM in order to avoid ambiguity regarding the current operation mode and reduce the probability of a wrong or no wake-up signal.

4.2.4.1 Low power monitoring (one threshold)

The function and the associated parameters of the low power monitoring with one delta pressure threshold are described in detail below:

LPM sequence (one threshold):

- The pressure is read with one adjustable repetition $t1_{pread_rep}$.
- Δp value is the difference between the current measured ambient pressure p_{amb} value and the previously stored pressure value $p_{register}$ (e.g. p_4 - p_3 or p_7 - p_6, see Low Power Monitoring one thresholds timing diagram, denoted as gradient value).
- In case Δp exceeds a defined and configured threshold $\Delta p1_{threshold}$:
  - the wake-up pin of the sensor is set to the high state (see V_{high_wake}) for an adjustable duration of t_{wp_pulse} and the sensor is exiting the LPM mode.
  - the LPM status register (see Response structure for LPM status register) is transmitted via the SPI interface as response during next received command.

Additional info:

- During t_{PD_pread} after the first wake-up signal the device is measuring and storing the first ambient pressure value (for example p_0) for the internal Δp calculation.

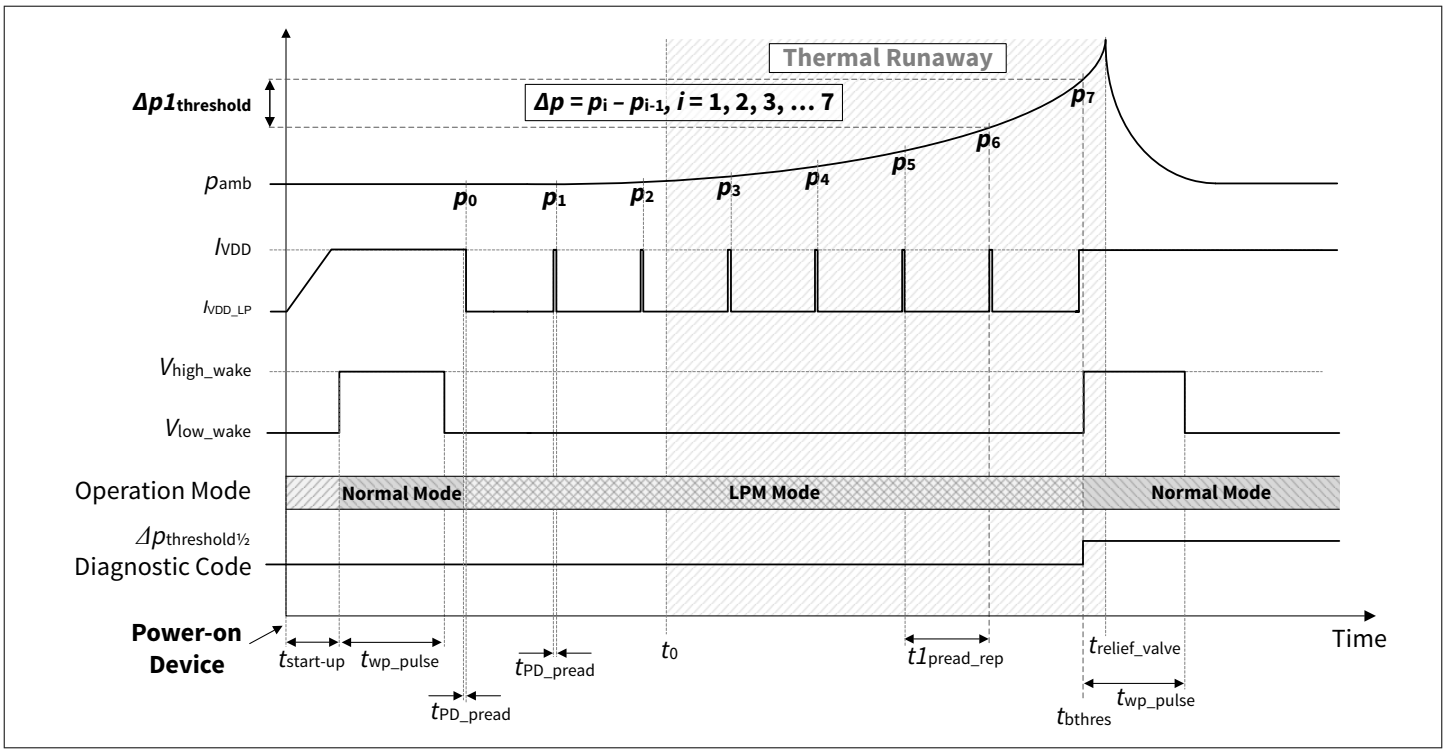

Figure 6 **Low power monitoring one threshold timing diagram**

4.2.4.2 Low power monitoring (two thresholds)

The function and the associated parameters of the Low Power Monitoring with two delta pressure threshold are described in detail below:

LPM sequence (two phases and two thresholds):

- The pressure is read with two adjustable repetitions. One for the first phase (see $t1_{pread_rep}$) and one for the second phase (see $t2_{pread_rep}$).
- $\Delta p1$ value in phase 1 is the difference between the current measured ambient pressure value p_{amb} and the previously stored pressure value $p_{register}$ (for example p_3 - p_2, see Low Power Monitoring two thresholds timing diagrams, denoted as gradient value).
- In case $\Delta p1$ exceeds a defined and configured first threshold $\Delta p1_{threshold}$ the sensor enters directly the second phase.
- $\Delta p2$ value in phase 2 is the difference between the current measured ambient pressure value p_{amb} and the first stored ambient pressure $p_{register}$ value in phase 2 (for example p_{16} - p_3, see Low Power Monitoring two thresholds timing diagrams, denoted as relative threshold value).
- In case $\Delta p2$ exceeds the second configurable threshold $\Delta p2_{threshold}$ in phase 2:
  - the wake-up pin of the sensor is set to the high state (see V_{high_wake}) for an adjustable duration (see t_{wp_pulse}) and the sensor is exiting the LPM mode, and
  - the LPM status register (see response structure for LPM status register) is transmitted via the SPI interface as response during the next received command.
- In case $\Delta p2$ does not exceed the second configurable threshold $\Delta p2_{threshold}$ in phase 2 the sensor switches automatically back to phase 1 after an adjustable number of readings (see $t2_{pread}$).

Additional info:

- In case the device measures in the first phase a $\Delta p1 > (\Delta p1_{threshold} + \Delta p2_{threshold})$, the wake-up pin of the sensor is set to the high state (see V_{high_wake}) for an adjustable duration (see t_{wp_pulse}) and the sensor is exiting the LPM mode without entering the second phase.
- During t_{PD_pread} after the first wake-up signal the device is measuring and storing the first ambient pressure value (for example p_0) for the internal Δp calculation.

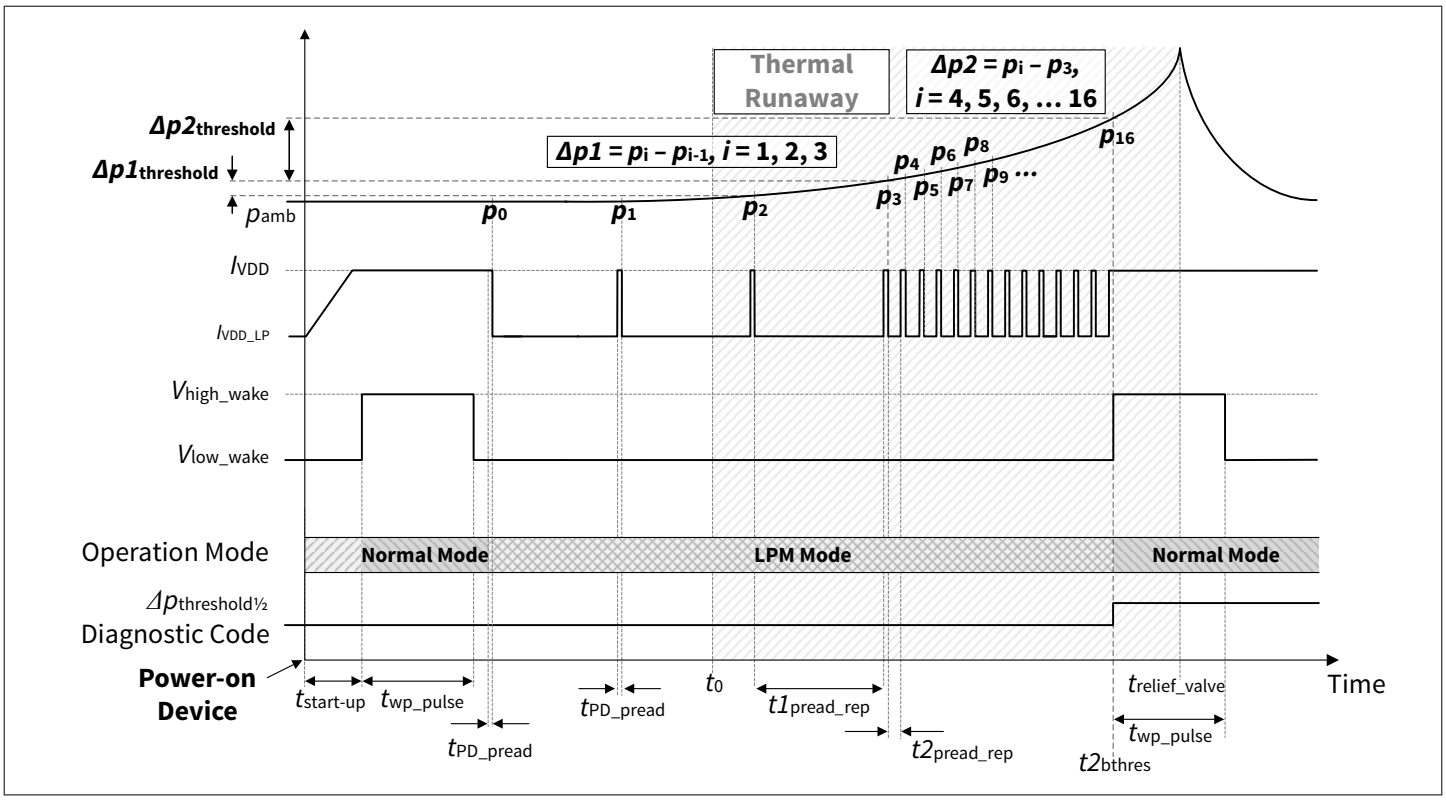

Figure 7 **Low power monitoring two thresholds with runaway timing diagram**

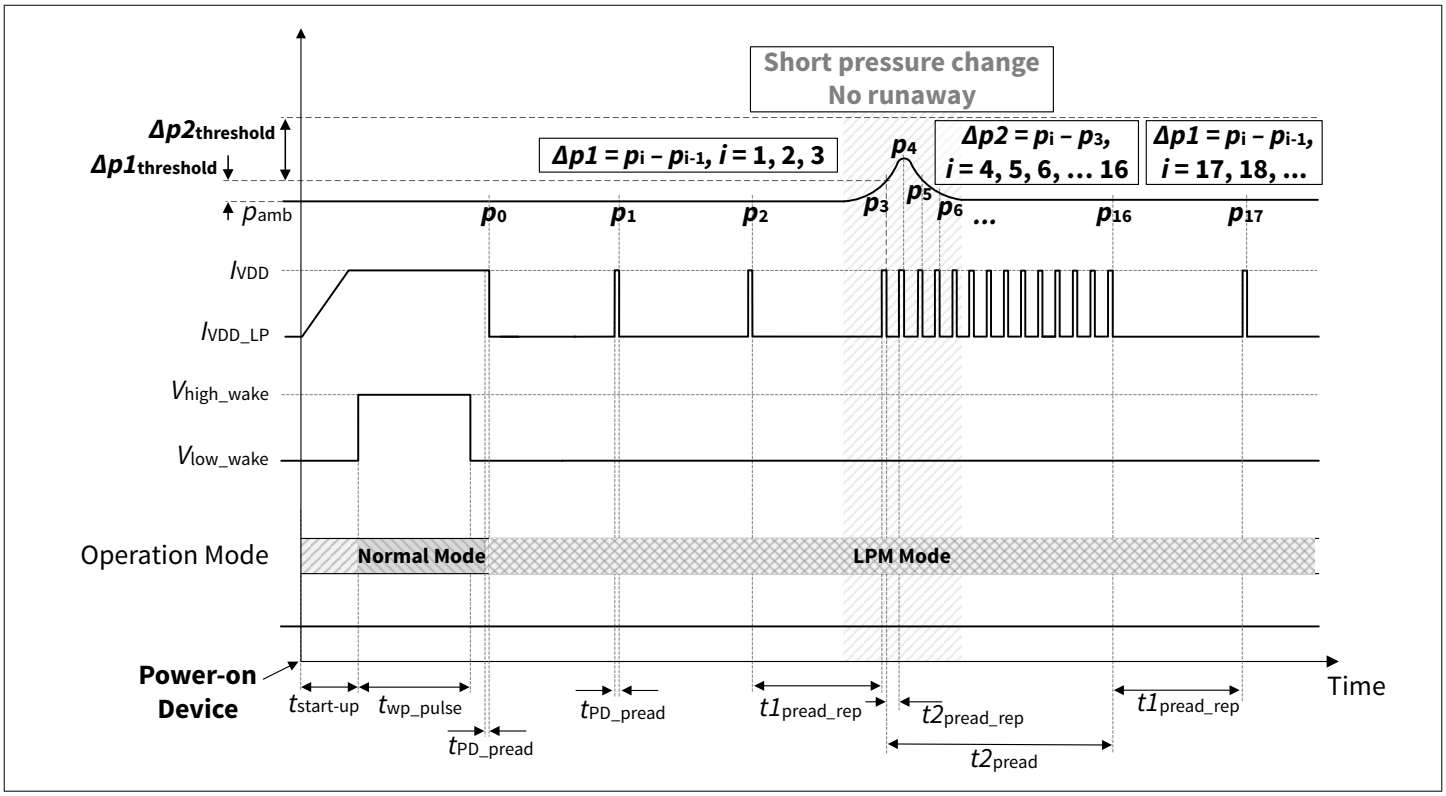

Figure 8 **Low power monitoring two thresholds without runaway timing diagram**

4.2.4.3 Interval timer

During the LPM mode the device wakes-up periodically with a repetition accuracy of $acc_{t_PD_pread}$. The repetition of the phase 1 and phase 2 timer is adjustable by changing the parameters $t1_{pread_rep}$ or $t2_{pread_rep}$.

4.2.4.4 Wake-up event

The purpose of the wake-up event (wake-up pin is set to the high state) is to wake up an external device for example microcontroller in case a configured delta pressure threshold ($\Delta p1_{threshold}$ or $\Delta p2_{threshold}$) is reached, when a self diagnostic detects an error, at power-up of the device or after power-down wake-up. The high state duration of the wake-up pin is adjustable by changing the parameter t_{wp_pulse}.

4.2.4.5 Entering low power monitoring mode

Before executing the LPM mode via SPI command, it is **mandatory** to follow one of the three sequences described below:

Sequence A: Full VDD off/on reset

1. Perform an undervoltage reset by decreasing the VDD level below the value defined in Undervoltage reset/release level.
2. After the voltage at the VDD pin falls below the Undervoltage reset/release level, wait a minimum of 1ms.
3. Reapply VDD to restart the device according to the specified supply levels.
4. Wait $t_{start\text{-}up_wd}$ or $t_{start\text{-}up_wod}$ (depending on the device configuration).
5. The LPM mode can be then initiated via the specified SPI command "Trigger low power monitoring command".

Sequence B: Power down/wake up cycle

1. Send the power down mode SPI command.
2. Wait for a minimum of 1 ms.
3. Wake up the device using the SPI command (any SPI command).
4. Wait $t_{start\text{-}up_wd}$ or $t_{start\text{-}up_wod}$ (depending on the device configuration).
5. The LPM mode can be then initiated via the specified SPI command "Trigger low power monitoring command".

Sequence C: SPI diagnosis command

1. Send the diagnosis SPI command.
2. Send the LPM SPI command. The command must be sent no later than within the $t_{LPM_diag_wait_max}$ (from the end of the diagnosis SPI command to the end of LPM SPI command).

4.2.4.6 Exiting low power monitoring mode

The device transitions from LPM mode into normal mode if the SPI master holds the NCS low during the rising edge of the CLK signal.

Note: The device sets the wake-up pin to high also when a master-triggered transition from LPM to normal mode occurs.

***Note**: If the sensor is in the Low Power Monitoring (LPM) mode then the next command triggers the wake-up process (NCS must be low in combination with a rising CLK edge).*

Depending on the configuration of $power_up_{diag_en}$ the user needs to wait the time $t_{start\text{-}up_wd_max}$ or $t_{start\text{-}up_wod_max}$ before sending the first SPI command (for example Acquire pressure command) to allow repowering of the sensor after the wake-up from LPM mode.

***Note**: The response of the sensor during this first command must be ignored in case a command was part of the NCS and CLK wake-up sequence. With the next SPI command the response of the device is the LPM status register.*

4.2.4.7 Delta pressure accuracy

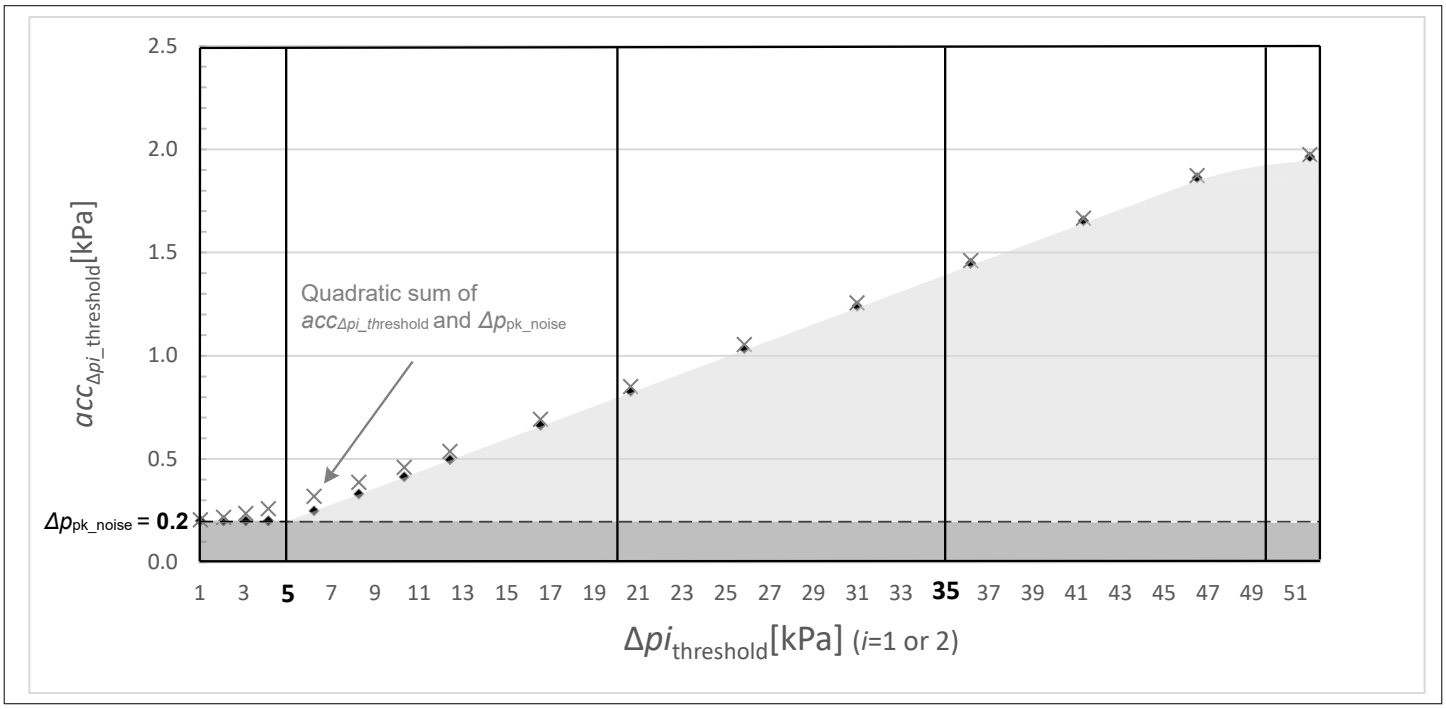

Figure 9 **Accuracy for delta pressure threshold acquisition**

Note: *Here, Δp_{pk_noise} is calculated as peak noise at 99.99% confidence level: $\Delta p_{pk_noise} = 4 * \Delta p_{noise_RMS}$. The limits of $acc_{\Delta pi_threshold}$ and Δp_{pk_noise} are uncorrelated, and the values add up quadratically.*

Note: *The graph illustrates the accuracy of the delta pressure threshold in LPM mode, where each plot corresponds to a threshold value ($\Delta p1_{threshold}$ or $\Delta p2_{threshold}$) as listed in Low power monitoring configuration parameters, and the values are stored in the EEPROM. This graph is also applicable to normal mode operation, under the condition that the (consecutive) pressure measurements forming the delta pressure value of interest are taken at intervals of ≤ 5 seconds and the delta pressure difference between the measurements does not exceed 50 kPa.*

4.2.4.8 Calculation of overall current consumption in LPM mode

The formula below can be used in order to calculate the overall average current consumption of the device in LPM mode based on the configured LPM parameters:

$$I_{\text{total}_i} = \frac{t_{\text{PD_pread}}}{t_{i\text{PD_pread_rep}} + t_{\text{PD_pread}}} \times I_{\text{VDD}} + \frac{t_{i\text{PD_pread_rep}}}{t_{i\text{PD_pread_rep}} + t_{\text{PD_pread}}} \times I_{\text{VDD_LP}} \quad \left(i = 1, 2\right) \tag{3}$$

Table 22 **Variables of overall average current consumption during LPM mode**

Variable	Description	Unit
$t1_{pread_rep}$	Phase 1 repetition of pressure reading	ms
$t2_{pread_rep}$	Phase 2 repetition of pressure reading	ms
t_{PD_pread}	Duration of pressure reading during low power monitoring mode	ms

(table continues...)

Table 22 (continued) Variables of overall average current consumption during LPM mode

Variable	Description	Unit
I_{VDD}	Supply current into VDD	mA
I_{VDD_LP}	Supply current into VDD during low power monitoring mode (quiescent current)	mA
I_{total}	Average current consumption	mA

4.2.4.9 Low power monitoring configuration parameters

The following parameters of the Low power monitoring are user-configurable:

Table 23 Low power monitoring configuration parameters

Configuration parameter	Symbol	Nominal range	Unit	Steps	Default	Note
Low Power Monitoring variant	$LPM_{variant}$	0 or 1	bit	-	1	Can be adjusted by changing the corresponding EEPROM bit: • 0: LPM with **one threshold** • 1: LPM with **two thresholds**
Phase 1 ambient pressure change threshold	$\Delta p1_{threshold}$	1.02 to 10.33	kPa	1.02, 2.08, 3.10, 4.12, 6.21, 8.25, 10.33	4.12	• Can be chosen from predefined values • Programming in EEPROM user page
Phase 2 ambient pressure change threshold	$\Delta p2_{threshold}$	1.02 to 51.65	kPa	1.02, 2.08, 3.10, 4.12, 6.21, 8.25, 12.41, 16.54, 20.66, 25.85, 30.99, 36.18, 41.32, 46.51, 51.65	20.66	• Can be chosen from predefined values • Programming in EEPROM user page
Phase 1 repetition of pressure reading	$t1_{pread_rep}$	10 to 5000	ms	10, 20, 30, 40, 60, 80, 100, 150, 300, 500, 1000, 2000, 3000, 4000, 5000	10	• Can be chosen from predefined values. • Programming in EEPROM user page • Timing accuracy $acc_{t_PD_pread}$ applies
Phase 2 repetition of pressure reading	$t2_{pread_rep}$	10 to 500	ms	10, 20, 30, 40, 50, 60, 80, 100, 150, 200, 250, 300, 400, 500	50	• Can be chosen from predefined values • Programming in EEPROM user page • Timing accuracy $acc_{t_PD_pread}$ applies

(table continues...)

Table 23 (continued) Low power monitoring configuration parameters

Configuration parameter	Symbol	Nominal range	Unit	Steps	Default	Note
Phase 2 maximum duration	$t2_{pread}$	2 to 1000	Reading pulses	2, 4, 8, 10, 15, 30, 50, 100, 200, 300, 400, 500, 600, 800, 1000	100	• Can be chosen from predefined values • Programming in EEPROM user page
Wake-up high state duration	t_{wp_pulse}	10 to always high	ms	10, 20, 40, 60, 80, 100, 200, 300, 400, 500, 600, 700, 800, 900, 1000, latched	300	• Can be chosen from predefined values • Programming in EEPROM user page • Timing accuracy $acc_{t_PD_pread}$ applies • The setting "latched" means: high until next valid SPI command

4.2.5 Serial interface

The device's interface can be configured for either full-duplex 4-pin SPI or half-duplex 3-pin SPI by programming the SPI_{type} configuration parameter.

The SPI timing and the associated timing parameters for full-duplex communication and data transmission are shown below:

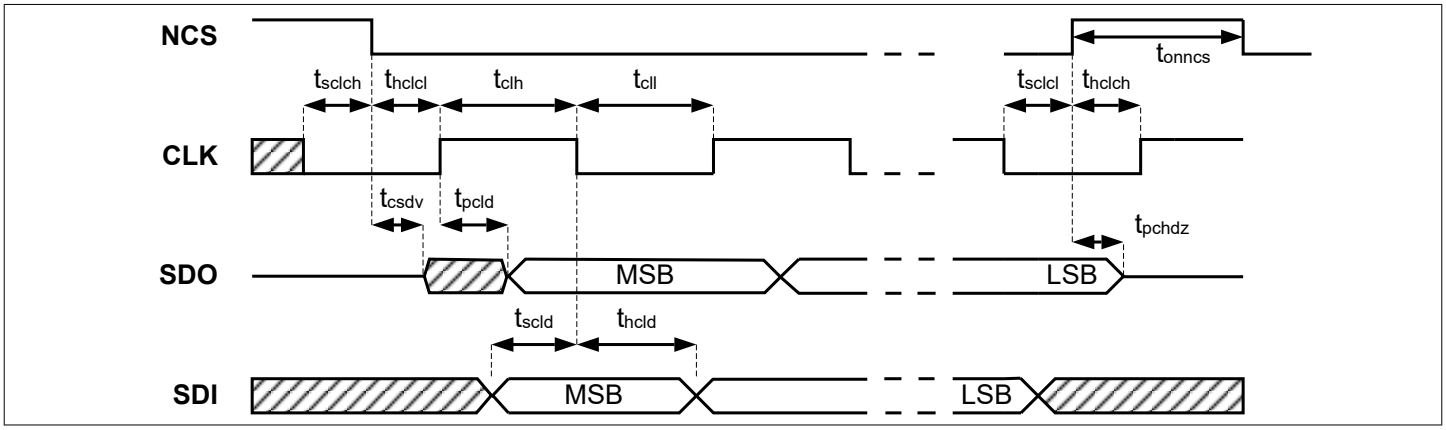

Figure 10 SPI timing (4-pin full-duplex), with CPOL = 0 setting

The SPI timing and the associated timing parameters for half-duplex communication and data transmission are shown below:

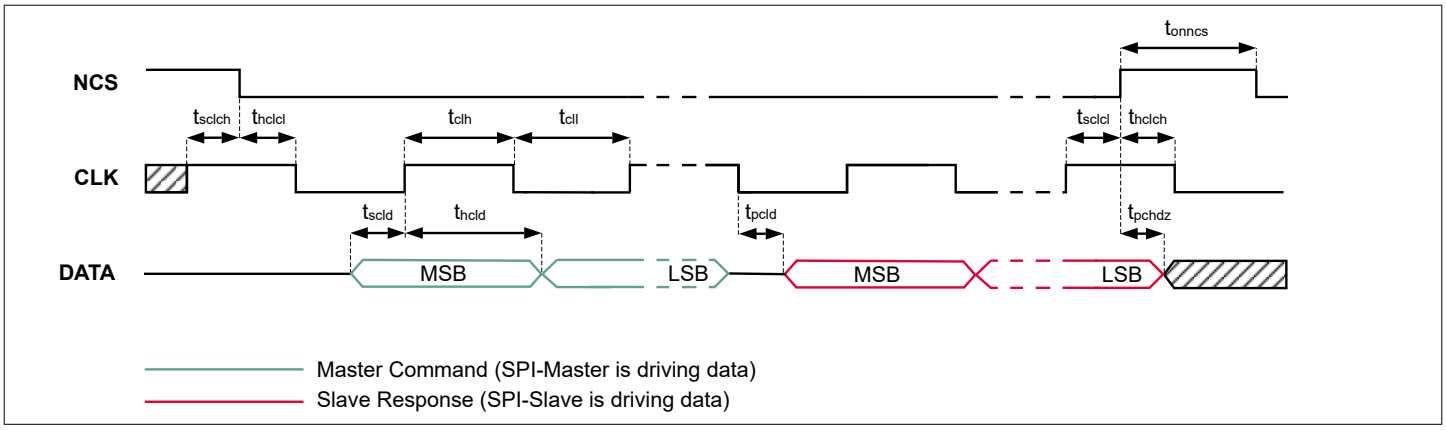

Figure 11 SPI timing (3-pin half-duplex), with CPOL = 1 setting

When NCS is high, SDO is let in a high impedance state (no SPI communication is possible).

If the number of CLK periods does not fit the configured SPI physical layer, the next SPI answer signalizes a communication error.

In case of no CLK edge when NCS is low, the transfer is considered as valid. For full-duplex the answer of last correctly received command is sent during next transfer.

The device is able to send a unique ID number, upon request. This Traceability-ID makes sure that all numbers for KP46x family are unique.

4.2.5.1 EEPROM programmability

The following parts of the EEPROM are user programmable via the SPI interface:

- Identifier response (spi_id: bit 0-7)
- SPI interface configuration:
  - $kp25x_{res_compat}$
  - vdd_{range}
  - $kp25x_{t_compat}$
  - SDO_{config}
  - SPI_{type}
  - $CLK_{polarity}$
  - SPI_{layer}
- Start-up self diagnostics:
  - wup_{diag_en}
  - $power_up_{diag_en}$
- Parameters of the Low Power Monitoring (LPM) feature:
  - $\Delta p1_{threshold}$
  - $\Delta p2_{threshold}$
  - $t1_{pread_rep}$
  - $t2_{pread_rep}$
  - t_{wp_pulse}
  - $t2_{pread}$
  - $LPM_{variant}$

4.2.5.2 Commands

The following commands are defined:

- Acquire identifier

- Acquire pressure (incl. the diagnosis pressure out of range, EEPROM check and last updated Diag1 & Diag2)[1)]
- Acquire temperature (incl. the diagnosis pressure out of range, EEPROM check and last updated Diag1 & Diag2)[1)]
- Trigger power-down mode (activates the power-down state)
- Trigger diagnosis (triggers Diag1, Diag2)
- Trigger programming mode (entry into programming mode only occurs with a high voltage level (>10V) on pin V_{PROG})[2)]

LPM specific commands:

- Acquire LPM status register
- Acquire absolute pressure value (iteration N)
- Acquire absolute pressure value (iteration N-1)
- Acquire absolute pressure value (iteration N-2)
- Acquire number of pressure reading iterations in phase 2
- Acquire LPM storage EDC check
- Trigger low power monitoring mode (activates the low power monitoring state)

[1)] Last updated diagnosis information is only available if the Trigger diagnosis command was sent at any time before, and the diagnostic reset is not active (Reset-bit C12 = '1').

[2)] High voltage programming requirements are specified in the User Manual in the chapter "Electrical characteristics".

***Note**:* *The full 5-bit diagnosis information is only available in a 10-bit SPI response frame. The LPM specific diagnosis information needs to be acquired by the dedicated SPI commands separately.*

4.2.5.3 Command behavior

When a command (N) is received and the processing of the previous command (N-1) has not finalized, the last command (N) will not interrupt the processing.

The diagnosis command triggers the Diag1 and Diag2 measurement; during the execution of the self diagnosis the pressure and temperature values (including out of range information) is not updated.

The first answer of the sensor after power-on or reset is the identifier response (see Response structure for identifier) independent from the command.

In full-duplex configuration, the answer of the command sent in SPI frame N will is sent in next SPI frame (N+1).

In half-duplex configuration, the slave answer follows directly (t_{pcld_max}) after the command sent by the master within the same NCS cycle.

4.2.5.4 Response structure

The following structure is defined for a 10-bit SPI response:

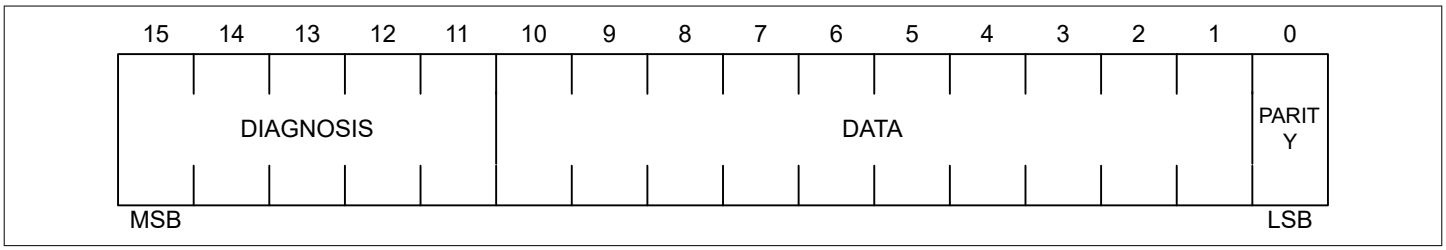

Figure 12 SPI response structure (10-bit)

This response structure is valid for the Acquire pressure command (10-bit), Acquire temperature command (10-bit) and Trigger diagnosis command (10-bit).

The following structure is defined for a 12-bit SPI response:

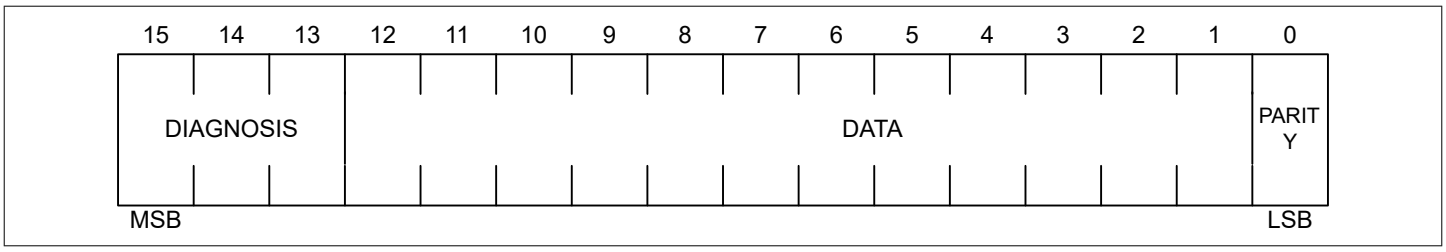

Figure 13 SPI response structure (12-bit)

This response structure is valid for the Acquire pressure command (12-bit), Acquire temperature command (12-bit) and Trigger diagnosis command (12-bit).

The following structure is defined for a 14-bit SPI response:

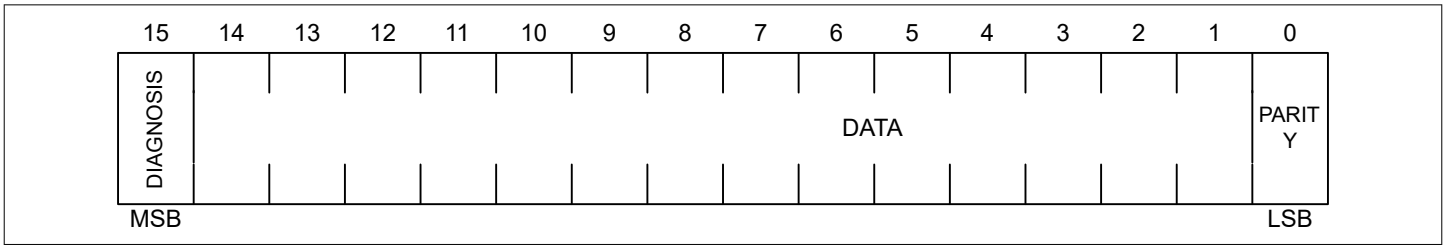

Figure 14 SPI response structure (14-bit)

This response structure is valid for the Acquire pressure command (14-bit), Acquire temperature command (14-bit) and Trigger diagnosis command (14-bit).

The following structure is defined for a SPI response for identifier:

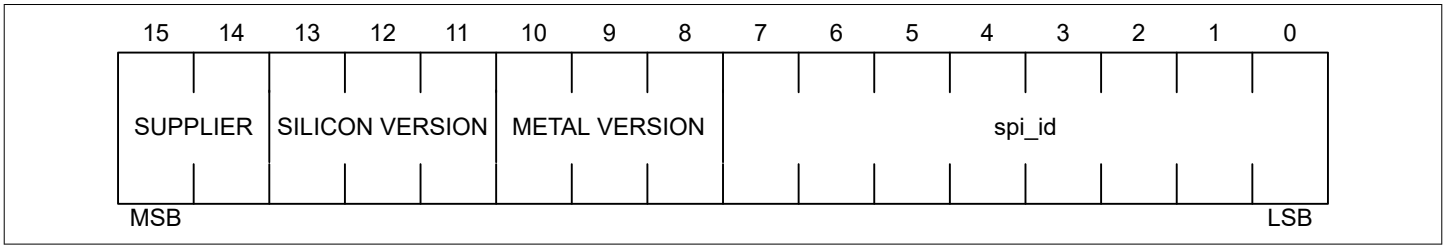

Figure 15 SPI response structure for identifier

The following structure is defined for a SPI response for LPM status register:

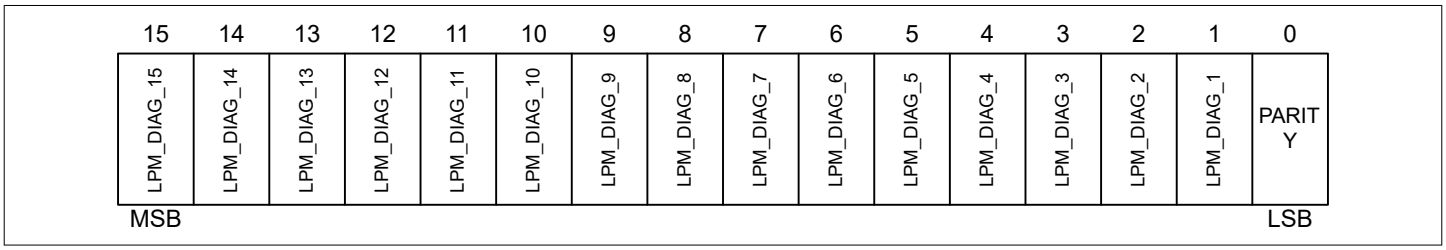

Figure 16 SPI response structure for LPM status register

Table 24 LPM status register description

Bit	Name	Description
15	LPM_DIAG_15	Δp exceeded configurated threshold $\Delta p1_{threshold}$ in phase 1

(table continues...)

Table 24 (continued) LPM status register description

Bit	Name	Description
14	LPM_DIAG_14	Δp exceeded configurated threshold $\Delta p2_{threshold}$ in phase 2 OR Δp exceeded configurated threshold $\Delta p1_{threshold}$+ $\Delta p2_{threshold}$ in phase 1
13	LPM_DIAG_13	Uncorrectable error in LPM storage
12	LPM_DIAG_12	EEPROM unprogrammed
11	LPM_DIAG_11	Uncorrectable error in EEPROM
10	LPM_DIAG_10	Error detected in EEPROM controller data page
9	LPM_DIAG_9	Overvoltage detected
8	LPM_DIAG_8	Pressure too high error
7	LPM_DIAG_7	Pressure too low error
6	LPM_DIAG_6	Diag1 error
5	LPM_DIAG_5	Diag2 error
4	LPM_DIAG_4	TJDiag error
3	LPM_DIAG_3	Full power-on reset
2	LPM_DIAG_2	Wake-up via NCS + SCLK
1	LPM_DIAG_1	Error of the LPM counter built-in self-test
0	Parity	Parity bit

The following structure is defined for a SPI response for LPM diagnosis:

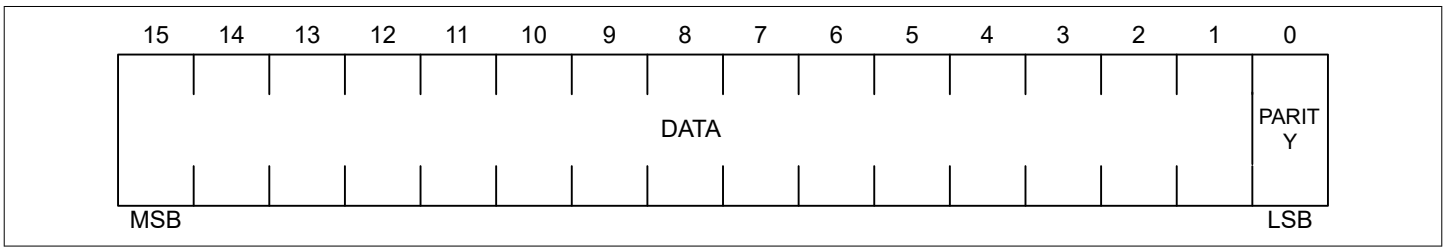

Figure 17 SPI response structure for LPM diagnosis

4.2.5.5 Parity

The following SPI responses include an odd parity (LSB, [0]):

- Acquire pressure
- Acquire LPM Status Register
- Acquire absolute pressure value (iteration N)
- Acquire absolute pressure value (iteration N-1)
- Acquire absolute pressure value (iteration N-2)
- Acquire number of pressure reading iterations in phase 2
- Acquire LPM storage EDC check
- Acquire temperature
- Trigger diagnosis
- Communication error

The number of bits with the value one in the 16 bit response is odd (including the parity bit).

4.2.5.6 Command definition (16-bit)

The following structure is defined for an SPI command:

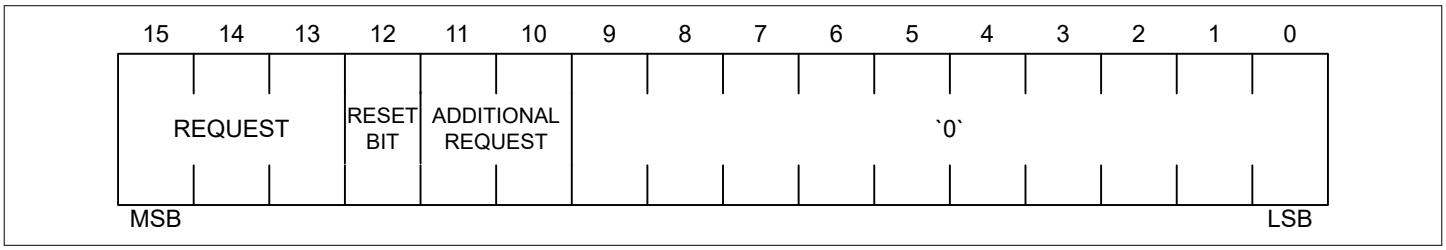

Figure 18 SPI command structure

The following structure is defined for an SPI command for LPM diagnosis:

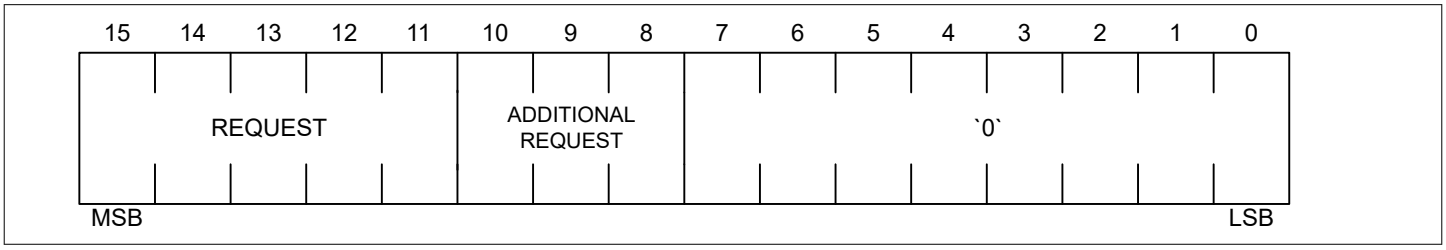

Figure 19 SPI command structure for LPM diagnosis

The following 16-bit commands is accepted by the device in case the configuration parameter SPI_{layer} is configured to 32 clock cycles:

Table 25 16-bit SPI commands

Command	Bit 15... Bit 0
Acquire pressure command (10-bit) for $kp25x_{res_compat} = 0$	001X000000000000
Acquire pressure command (10-bit) for $kp25x_{res_compat} = 1$*	001X010000000000
Acquire pressure command (12-bit) for $kp25x_{res_compat} = 0$	001X010000000000
Acquire pressure command (12-bit) for $kp25x_{res_compat} = 1$*	001X000000000000
Acquire pressure command (14-bit)	001X100000000000
Acquire temperature command (10-bit) for $kp25x_{res_compat} = 0$	010X000000000000
Acquire temperature command (10-bit) for $kp25x_{res_compat} = 1$*	010X010000000000
Acquire temperature command (12-bit) for $kp25x_{res_compat} = 0$	010X010000000000
Acquire temperature command (12-bit) for $kp25x_{res_compat} = 1$*	010X000000000000
Acquire temperature command (14-bit)	010X100000000000
Acquire LPM status register	1010100100000000
Acquire absolute pressure value (iteration N)	1010101000000000

(table continues...)

Table 25 (continued) 16-bit SPI commands

Command	Bit 15... Bit 0
Acquire absolute pressure value (iteration N-1)	1010101100000000
Acquire absolute pressure value (iteration N-2)	1010110000000000
Acquire number of pressure reading iterations in phase 2	1010110100000000
Acquire LPM storage EDC check	1010111000000000
Trigger diagnosis command (10-bit) for $kp25x_{res_compat}$ = 0	100X000000000000
Trigger diagnosis command (10-bit) for $kp25x_{res_compat}$ = 1*	100X010000000000
Trigger diagnosis command (12-bit) for $kp25x_{res_compat}$ = 0	100X010000000000
Trigger diagnosis command (12-bit) for $kp25x_{res_compat}$ = 1*	100X000000000000
Trigger diagnosis command (14-bit)	100X100000000000
Trigger power-down mode command	1010000000000000
Trigger low power monitoring command	1010100000000000
Acquire identifier command	111X000000000000
Trigger programming mode command	0000110000000000

: The commands marked with "" are only valid for full-duplex communication. In half-duplex, the $kp25x_{res_compat}$ setting is ignored and the commands for the “0” setting are always valid.

***Note**: After a Trigger diagnostic command, users have to wait the time $t_{diag_wait_max}$ to acquire a valid pressure or temperature value.*

***Note**: The Reset-bit (C12) determines how the diagnostic reset is handled (see also: Chapter 4.2.6.2).*

4.2.5.7 Command definition (8-bit)

The following 8-bit commands is accepted by the device in case the configuration parameter SPI_{type} is programmed to half-duplex 3-pin SPI and the configuration parameter SPI_{layer} to 24 clock cycles:

Table 26 8-bit SPI commands

Command	Bit 7 ... Bit 0
Acquire pressure command (10-bit)	001X0000
Acquire pressure command (12-bit)	001X0100
Acquire pressure Command (14-bit)	001X1000
Acquire temperature Command (10-bit)	010X0000
Acquire temperature Command (12-bit)	010X0100
Acquire temperature Command (14-bit)	010X1000
Trigger diagnosis Command (10-bit)	100X0000

(table continues...)

Table 26 (continued) 8-bit SPI commands

Command	Bit 7 ... Bit 0
Trigger diagnosis Command (12-bit)	100X0100
Trigger diagnosis Command (14-bit)	100X1000
Trigger power-down mode command	10100000
Trigger low power monitoring command	10101000
Acquire identifier command	111X0000
Trigger programming mode command	00001100
Acquire LPM status register	10101001
Acquire absolute pressure value (iteration N)	10101010
Acquire absolute pressure value (iteration N-1)	10101011
Acquire absolute pressure value (iteration N-2)	10101100
Acquire number of pressure reading iterations in phase 2	10101101
Acquire LPM storage EDC check	10101110

***Note**: The Reset-bit (C4) determines how the diagnostic reset is handled (see also: Chapter 4.2.6.2).*

Where the interface is configured for 3-wire SPI (half-duplex), if the device receives a valid "Trigger programming mode" command, it enters programming mode and switches to half-duplex SPI with 16bit commands in the subsequent SPI frame.

Note: The programming interface always uses 16bit commands regardless of the SPI physical layer (SPI_{layer}) configuration.

4.2.5.8 Communication error

In normal operation, only the specified commands are valid. Every abnormality of these commands (for example unused command, other value of unused bits, number of clock periods not according to configured physical layer) will result in a communication error. The response to a detected communication error is given below.

15	14	13	12	11	10	9	8	7	6	5	4	3	2	1	0
0	0	0	0	0	0	0	0	0	0	0	0	0	0	0	1

Figure 20 Response after a communication error

Additionally, the device sets the wake-up pin to the high state (see V_{high_wake}) in case of a detected communication error.

If a communication error occurs, then the device sends an error response and clears the error state after sending the response.

Where the interface is configured for 3-pin half-duplex, the device sends an error response if one (or both) of the following two errors occur:

- incorrect command in the current frame
- incorrect timing in the previous frame

4.2.5.9 Identifier response definition

The response to an "Acquire identifier command" is a defined value for each derivate as stated below. With this response, the **KP467** sensor can be identified when operated in a bus system with several different parts.

15	14	13	12	11	10	9	8	7	6	5	4	3	2	1	0
0	1	0	1	1	0	0	1	0	1	1	0	1	0	1	1

Figure 21 Identifier response definition

4.2.5.10 Single device operation

The figure below shows an example on how to connect a single device to a microcontroller. After NCS is pulled to low, the request command is sent to the sensor with the next 16 cycles of the CLK. The response of the sensor for the previous request command is returned at the same time.

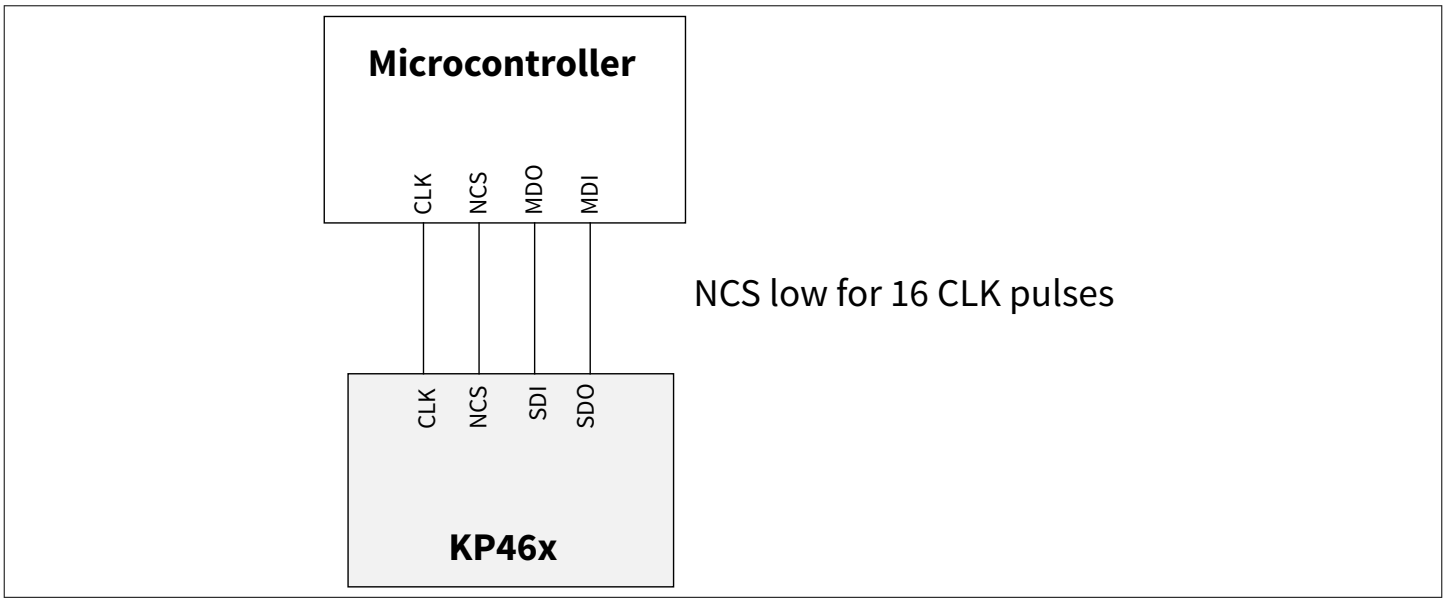

Figure 22 Example for single device operation

The SPI signal timing for single device operation is shown in the figure below.

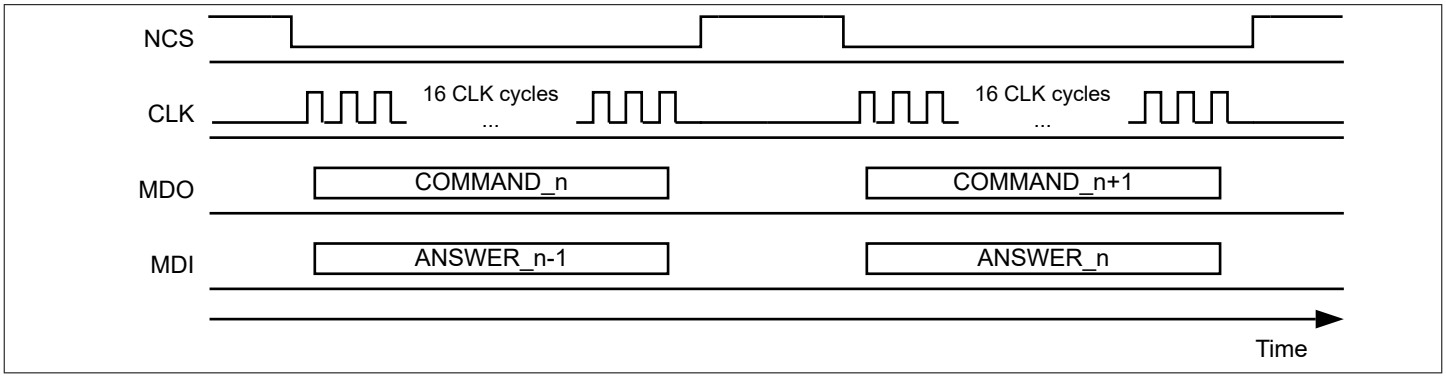

Figure 23 Example for single device signal diagram

4.2.5.11 Daisy chain operation (4-pin, full-duplex)

The daisy chain operation can be used to connect several devices to one SPI connection in order to save microcontroller pins. Please see Daisy chain operation example for an example how to connect several devices to one microcontroller.

The number of devices connected in daisy chain operation is unlimited.

The figure below shows an example of a combination of daisy chain mode and parallel operation.

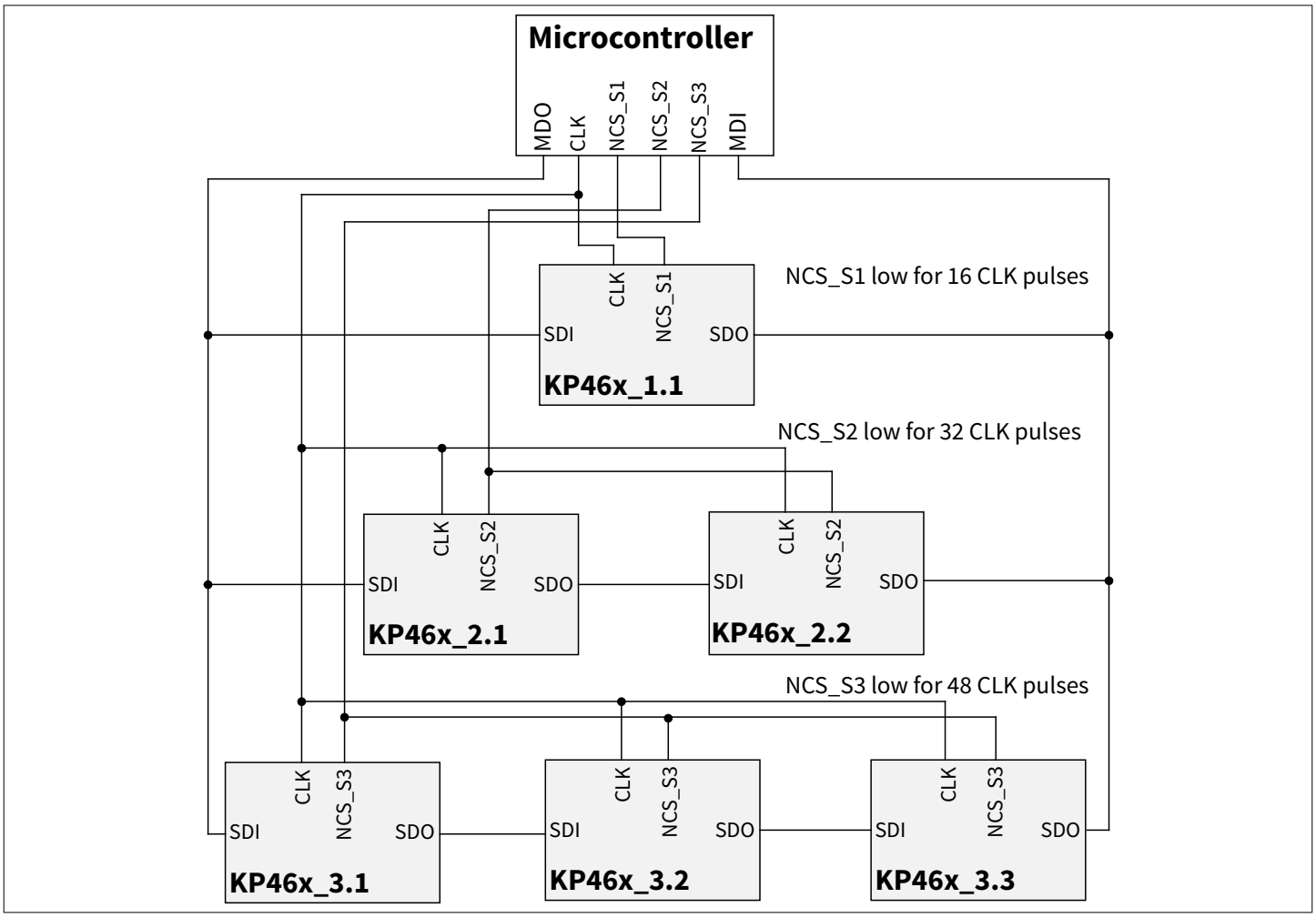

Figure 24 **Example for daisy chain operation**

Note: *Not all five sensors in this example could be addressed at once. Only one branch can be addressed at once (for example the **KP46x_2.x** branch). Finally only one NCS line can be low at the same time (NCS_S1, NCS_S2 or NCS_S3).*

The example for daisy chain operation figure shows an example of a combination of daisy chain mode and parallel operation. The responding NCS line for the addressed sensor group must be low during the complete communication. During this time the provided number of clock pulses must be the multiplication result of 16 times the number of sensors in a daisy chain (for example 32 clock pulses for the KP46x_2.x branch in figure Example for daisy chain operation). It is important that NCS_S2.1 and NCS_S2.2 stay at the low level during the complete transmission. This allows the sensor after receiving more than 16 clock pulses without a change in the NCS signal, to automatically switch to daisy chain mode (in this example the first received 16-bit input data received by the sensor S2.1 is clocked to the output of sensor S2.1 with the last 16 clock pulses). The example for daisy chain operation shows the whole signal diagram.

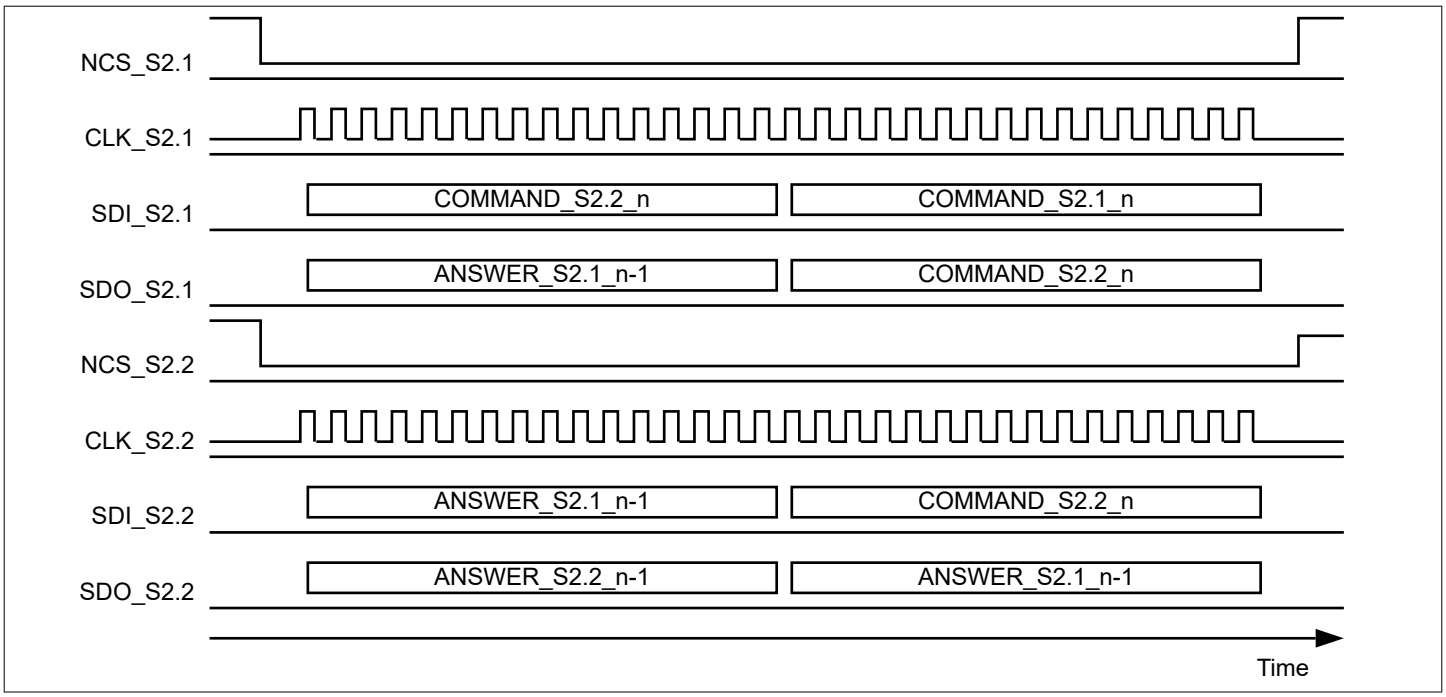

Figure 25 **Example for daisy chain signal diagram**

It is important that the number of clock pulses is a multiple of 16. Otherwise all commands for a daisy chain branch is identified as invalid commands and the response of all sensors on this branch will be the Communication error response.

4.2.5.12 SPI configuration parameters

The following parameters of the digital interface are user-configurable:

Table 27 **Interface configuration parameters**

Configuration Parameter	Symbol	Nominal range	Unit	Step width	Default	Note
Start-up diagnostics - VDD Power-On	$power_up_{diag_en}$	0 or 1	bit	-	1	Can be adjusted by changing the corresponding EEPROM bit: • 0: **Deactivated self diagnostics** during V_{DD} start-up • 1: **Activated self diagnostics** during V_{DD} start-up This influences the average power consumption of the device.
Start-up diagnostic - PD Power-Up	wup_{diag_en}	0 or 1	bit	-	1	Can be adjusted by changing the corresponding EEPROM bit: • 0: **Deactivated self diagnostics** during PD start-up • 1: **Activated self diagnostics** during PD start-up This influences the average power consumption of the device.

(table continues...)

Table 27 (continued) Interface configuration parameters

Configuration Parameter	Symbol	Nominal range	Unit	Step width	Default	Note
VDD range	vdd_{range}	0 or 1	bit	-	1	Can be adjusted by changing the corresponding EEPROM bit: • 0: **3.3 V** supply voltage for the device • 1: **5.0 V** supply voltage for the device
Temperature compatibility	$kp25x_{t_compat}$	0 or 1	bit	-	1	Can be adjusted by changing the corresponding EEPROM bit: • 0: $\boldsymbol{vdd_{range}}$ bit is **active.** Same temperature offset parameter and transfer function for 3.3 V and 5.0 V supply voltage (please see Transfer function temperature)**.** • 1: $\boldsymbol{vdd_{range}}$ bit is **inactive.** Different temperature offset parameter and transfer function for 3.3 V and 5.0 V supply voltage (please see Transfer function temperature)**.**
Acquire pressure and temperature command	$kp25x_{res_compat}$	0 or 1	bit	-	0	Can be adjusted by changing the corresponding EEPROM bit: • 0: 10-bit acquire pressure/ temperature command like KP254 • 1: 12-bit acquire pressure/ temperature command like KP253
SDO configuration	SDO_{config}	0 or 1	bit	-	1	Can be adjusted by changing the corresponding EEPROM bit: • 0: SDO is configured as **Open Drain** • 1: SDO is configured as **Push/ Pull**
SPI type	SPI_{type}	0 or 1	bit	-	1	Can be adjusted by changing the corresponding EEPROM bit: • 0: SPI **half-duplex** configuration (3-pin SPI) • 1: SPI **full-duplex** configuration (4-pin SPI)

(table continues...)

Table 27 (continued) Interface configuration parameters

Configuration Parameter	Symbol	Nominal range	Unit	Step width	Default	Note
SPI physical layer	SPI_{layer}	0 or 1	bit	-	1	Can be adjusted by changing the corresponding EEPROM bit: • 0: **24 clock cycles** (CLK) for 8-bit master command and 16-bit slave (Sensor) response • 1: **32 clock cycles** (CLK) for 16-bit master command and 16-bit slave (Sensor) response **Info:** This configuration is only valid in case the device is configured to half-duplex 3-pin SPI (SPI_{type} = 0).
CLK polarity (CPOL)	$CLK_{polarity}$	0 or 1	bit	-	0	Can be adjusted by changing the corresponding EEPROM bit: • 0: CLK **low** when NCS goes low (data read on falling CLK edge) • 1: CLK **high** when NCS goes low(data read on rising CLK edge)

4.2.6 Diagnosis

The sensor is able to detect automatically the following malfunctions:

- Pressure out of range (low and high)
- Signal path check (Diag1)
- Sensor cell check (Diag2)
- EEPROM check (ECC error)

If a malfunction is detected, the responding diagnosis code is sent with the next response.

***Note**: The Diag1 and Diag2 test can only be triggered by the separate* Trigger diagnosis command*. After this command users have to wait the time $t_{diag_wait_max}$ to get a valid pressure or temperature value after a new request.*

In case a 10-bit Acquire temperature or pressure command is received by the device a 5-bit diagnosis will be transmitted during the next received command as part of the 10-bit Response structure.

If more than one test fails, only that diagnosis code with the highest priority is sent.

Table 28 5-bit diagnosis codes

Failure	Priority	Diagnosis code				
		Bit 15	Bit 14	Bit 13	Bit 12	Bit 11
EEPROM: ECC error	1	1	0	0	0	0
Internal Error Detected	2	1	1	1	1	1

(table continues...)

Table 28 (continued) 5-bit diagnosis codes

Failure	Priority	Diagnosis code				
Acquisition chain failure: Diag1	3	0	1	0	0	0
Sensor cell failure: Diag2	4	0	0	1	0	0
Pressure out of range: High	5	0	0	0	1	0
Pressure out of range: Low	6	0	0	0	0	1
No error	–	0	1	0	1	0

In case a 12-bit Acquire temperature or pressure command is received by the device a 3-bit diagnosis is transmitted during the next received command as part of the 12-bit Response structure.

If more than one test fails, only that diagnosis code with the highest priority is sent.

Table 29 3-bit diagnosis codes

Failure	Priority	Diagnosis code		
		Bit 15	Bit 14	Bit 13
EEPROM: ECC error	1	1	0	0
Internal Error Detected	2	1	1	1
Acquisition chain failure: Diag1	3	0	1	0
Sensor cell failure: Diag2	4	0	0	1
No error	–	0	1	1

In case a 14-bit Acquire temperature or pressure command is received by the device a 1-bit diagnosis is transmitted during the next received command as part of the 14-bit Response structure.

Table 30 1-bit diagnosis codes

Failure	Diagnosis code
	Bit 15
Internal error detected	1
No error	0

***Note**: The diagnosis codes Diag1 and Diag2 are not updated until a self diagnosis is triggered by sending the Trigger diagnosis command.*

4.2.6.1 LPM diagnosis

In case an internal error (for example ECC) is detected during LPM mode the device sets the WU_{OUT} pin to the high state (V_{high_wake}) and transmits the LPM diagnosis response as response of next received SPI command.

The sensor is able to provide on SPI request LPM diagnosis information.

- LPM status register
  - Δp exceeded configurated threshold $\Delta p1_{threshold}$ in phase 1
  - Δp exceeded configurated threshold $\Delta p2_{threshold}$ in phase 2
  - Uncorrectable error in LPM storage
  - EEPROM unprogrammed
  - Uncorrectable error in EEPROM
  - Error detected in EEPROM controller data page

- Overvoltage detected
- Pressure too high error
- Pressure too low error
- Diag1 error
- Diag2 error
- TJDiag error
- Full power-on reset
- Wake-up via NCS + SCLK
- Error of the LPM counter built-in self-test

- Ambient pressure value iteration N (first pressure reading after wake-up)
- Ambient pressure value iteration N-1
- Ambient pressure value iteration N-2
- Number of pressure reading iterations in phase 2
- LPM storage EDC check

4.2.6.2 Diagnosis reset

The Reset-bit (C12 for 16-bit commands, C4 for 8-bit commands) of a SPI command allows using different reset strategies:

- Reset-bit = '0': All transmitted failures is reset (with the exception of ECC error)
- Reset-bit = '1': A transmitted failure is not reset

***Attention**: Reset of the ECC error is not possible. Once they are detected and transmitted it remains until supply reset or power-down mode is entered.*

4.2.6.2.1 Reset-bit = '1'

Once a failure is detected, the corresponding diagnosis code is still transmitted continuously, even if the failure disappears/is no longer present, as long as:

- A failure with a higher priority is not detected
- The sensor is not reset (power-down)

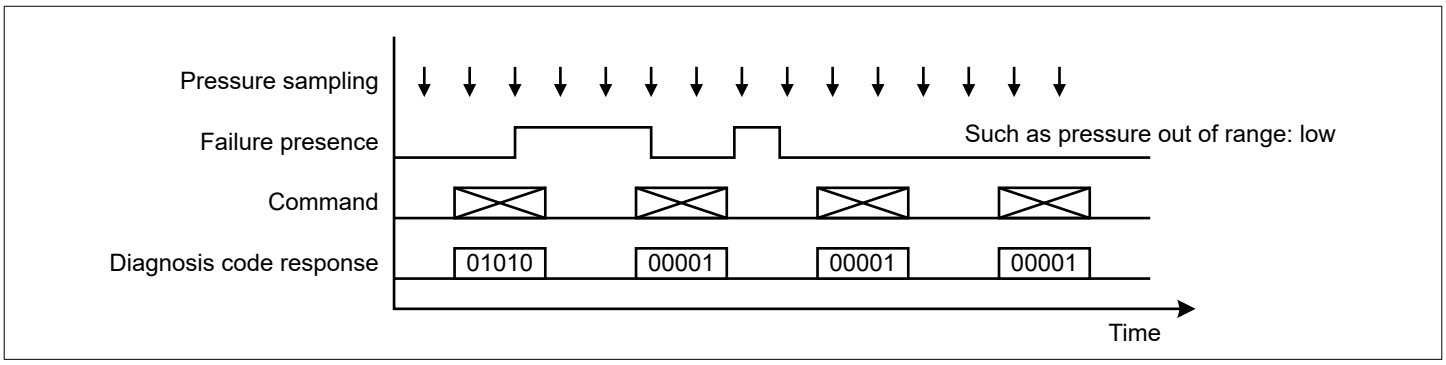

Figure 26 Example for reset strategy Reset-bit C12 = '1'

4.2.6.2.2 Reset-bit = '0'

A detected failure is only transmitted by the responding diagnosis code as long as the failure is present with the exception of ECC error. The diagnosis code is reset after once transmitted. Only if the failure is detected again, the diagnosis code is transmitted again with the next response.

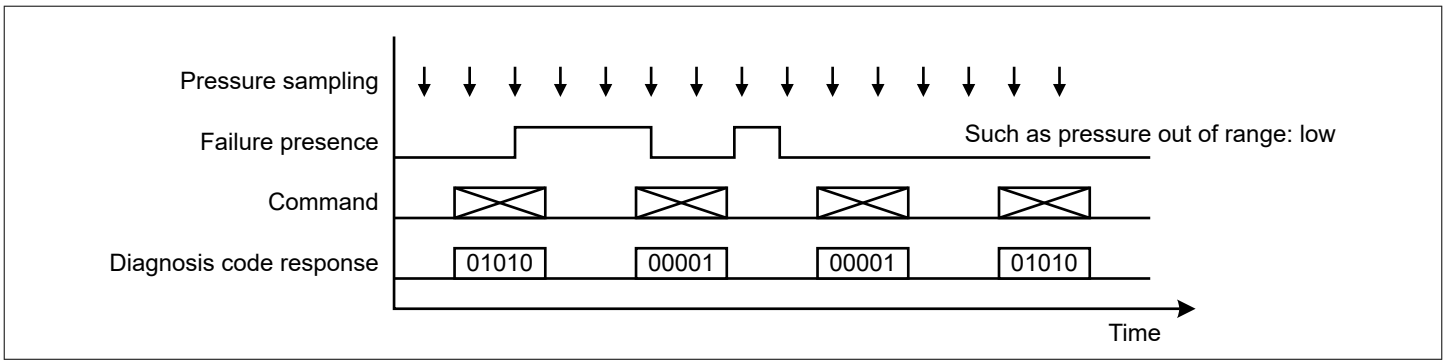

Figure 27 **Example for reset strategy Reset-bit C12 = '0'**

4.2.6.3 Pressure out of range

The measured pressure is internally checked. If the pressure value falls below the lower limit $p_{IN,1}$ or exceeds the higher limit $p_{IN,2}$ the corresponding diagnosis code will be set. The lower and higher limits are defined in the Transfer function pressure chapter.

4.2.6.4 Diag1

The Diag1 test checks the functionality of the signal path. Therefore the inputs of the sigma delta ADC are shorted. Afterwards, the system response is compared with the expected range (~ 50% of full scale range). If the system response is out of range, the diagnosis code is set.

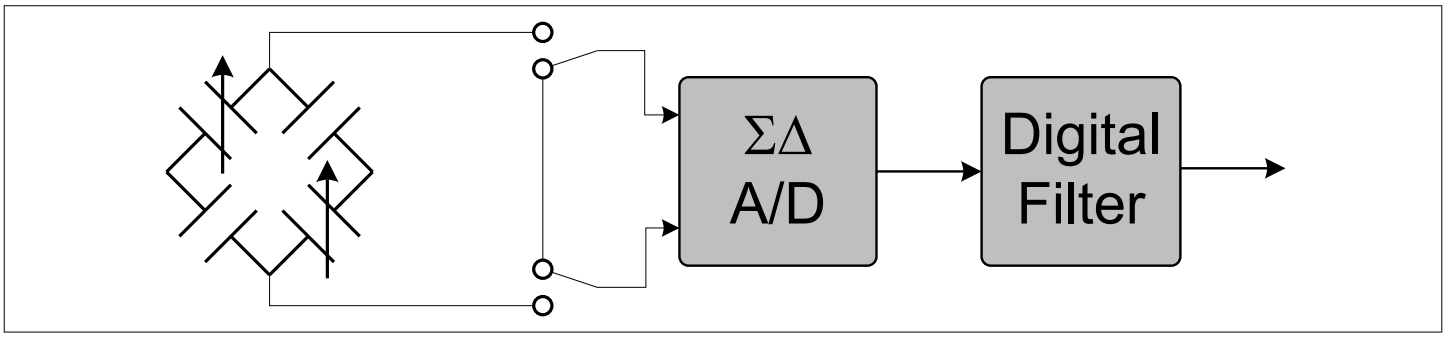

Figure 28 **Diag1 functionality**

4.2.6.5 Diag2

The Diag2 test checks the functionality of the pressure sensor cells. Therefore a malfunction (for example broken membrane) can be detected. The KP46x pressure sensing element is made of 2 measuring cells and 2 reference cells. In the normal mode these four cells are connected in a Wheatstone bridge configuration. In the Diag2 mode, the connection of the cells is modified as shown in the figure below:

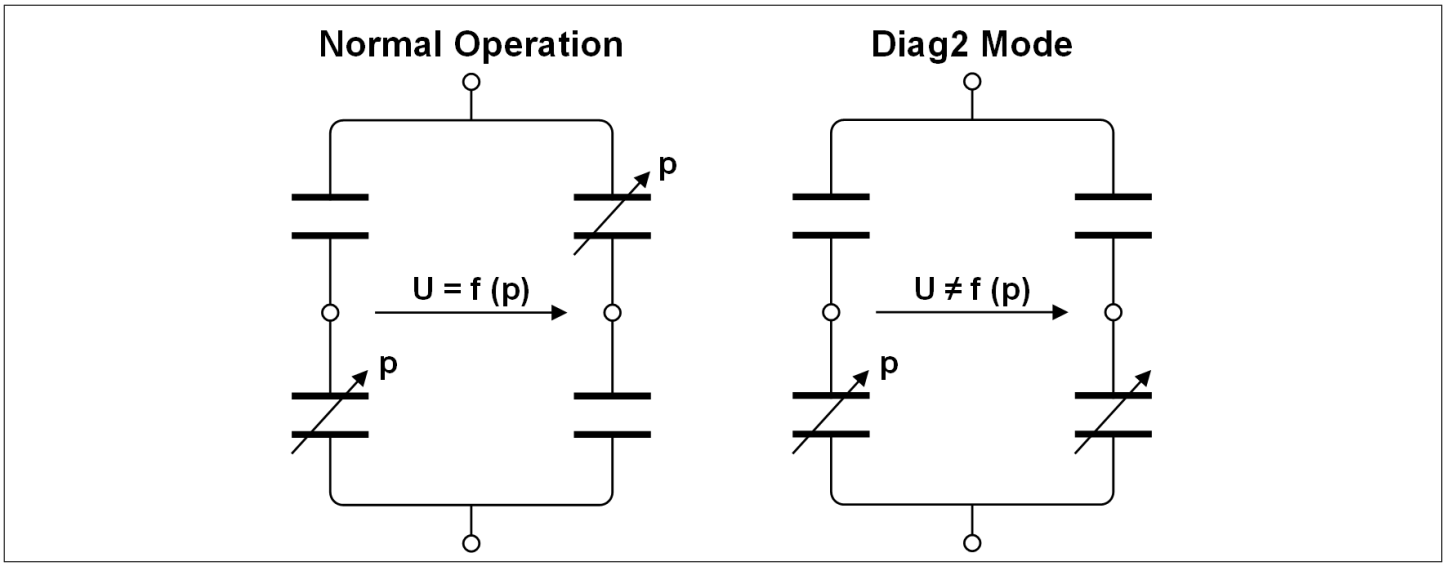

Figure 29 **Diag2 functionality**

4.2.6.6 EEPROM check

Every start-up and wake-up a full EEPROM ECC test is executed. Each EEPROM word consist of 16 data bits and 6 ECC bits. The 6 ECC bits allow the detection and correction of one flipped data bit and the detection of two flipped data bits within one EEPROM word (16 data bits).

A one-bit error per EEPROM word is corrected. The sensor continues with normal operation. Any additional bit error in this EEPROM word results in an ECC error. In case of an ECC error the corresponding diagnosis code is transmitted with the next response.

4.2.7 Calculation of overall current consumption

The formulas below can be used in order to calculate the overall average current consumption of the device in normal operation mode based on the system and SPI configuration (for example C_{load} on SDO):

$$I_{VDD_{average}} = I_{VDD} + I_{SPI_{average}} \tag{4}$$

$$I_{VDD_{average}} = I_{VDD} + \frac{16 \times f_{NCS}}{f_{SPI}} \times \left(250\ \mu\ A + \frac{f_{SPI} \times C_{load} \times V_{DD}}{2}\right) \tag{5}$$

Table 31 **Variables of overall average current consumption formula**

Variable	Description	Unit
I_{VDD}	Supply current into VDD	µA
f_{NCS}	Sampling rate (for example pressure requests)	MHz
f_{SPI}	Clock frequency of SPI interface	MHz
C_{load}	Load capacitance on SDO	pF
V_{DD}	Supply voltage	V
$I_{VDD_average}$	Average current consumption	µA

4.2.8 Start-up behavior

There is no SPI response of the device on any SPI command during the start-up phase ($t_{start\text{-}up}$).

5 Application information

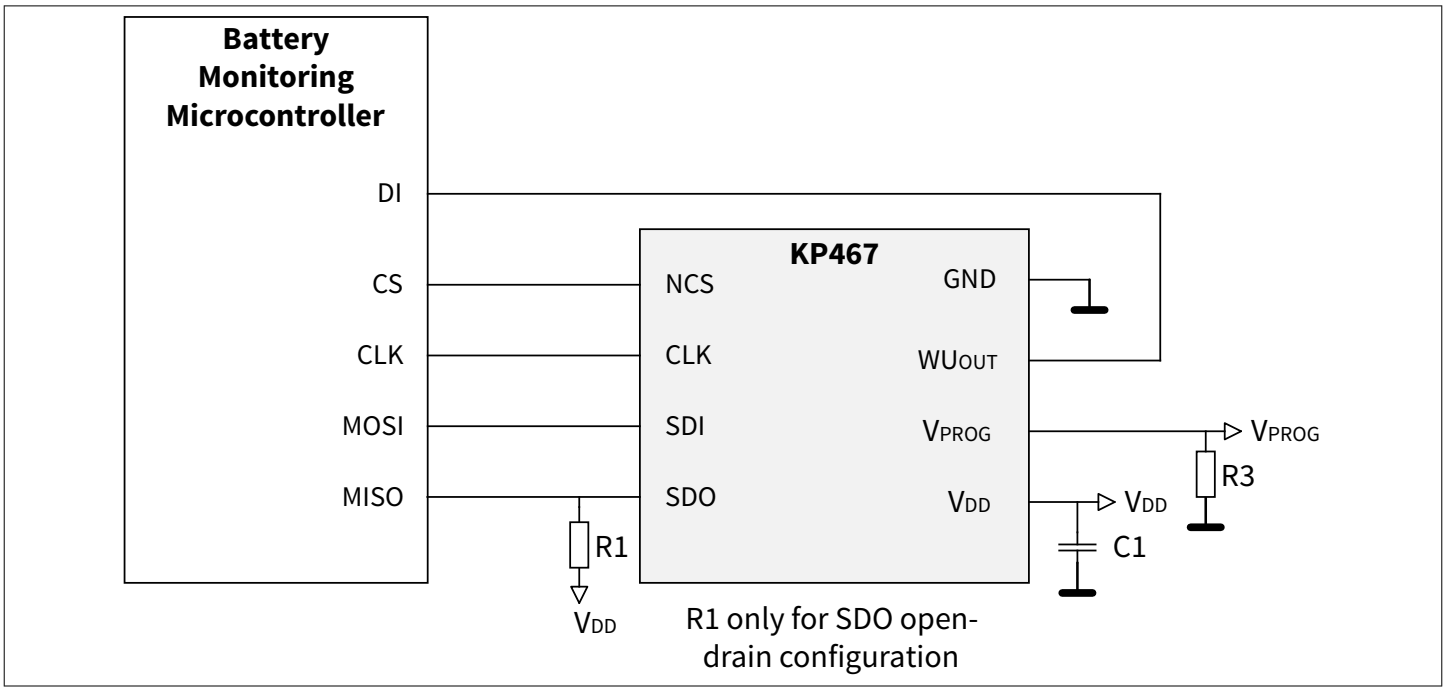

Figure 30 **Application circuit example for battery monitoring (full-duplex)**

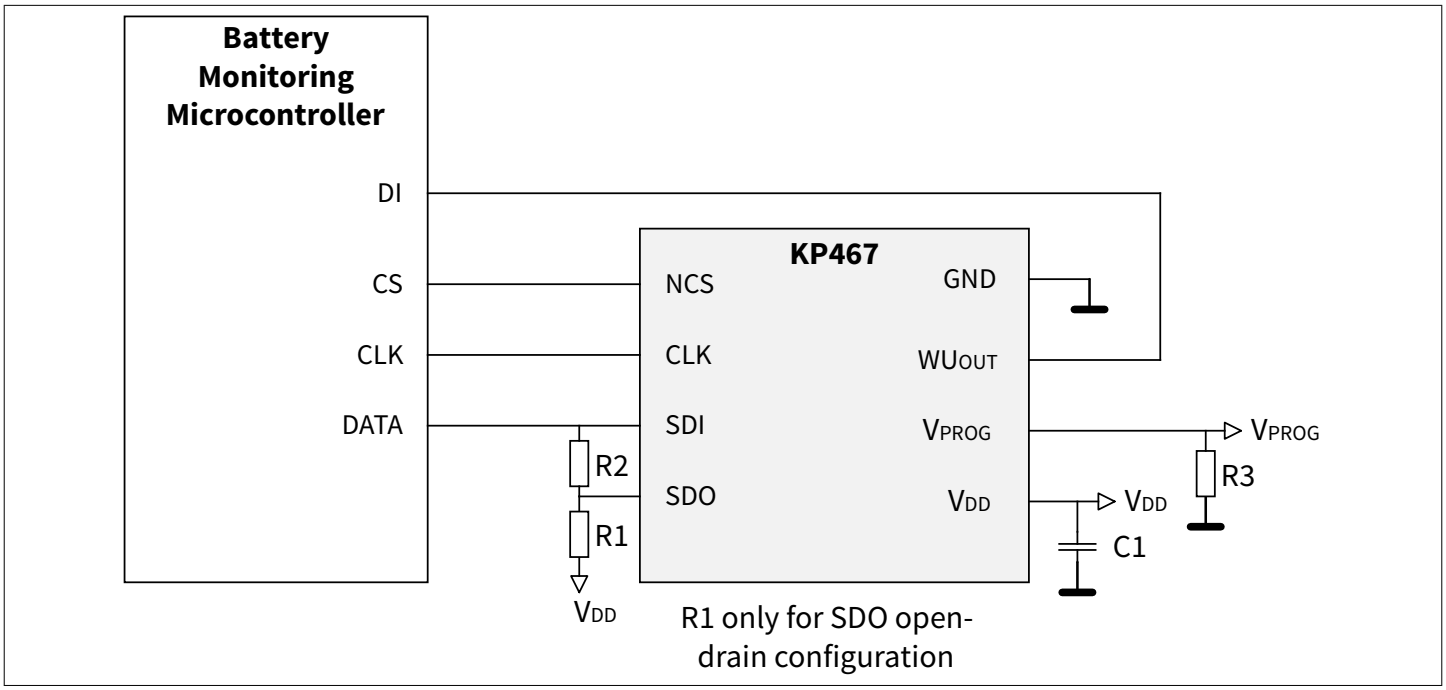

Figure 31 **Application circuit example for battery monitoring (half-duplex)**

Where the device is used in a 3-pin half-duplex SPI configuration, it is highly recommended to use an open-drain output configuration on both master and slave device. In case the device is used in a 3-pin half-duplex SPI configuration with the output configured to push-pull, the system integrator is responsible to implement a suitable SDO/SDI decoupling resistor to prevent damage by cross currents.

Table 32 Component values

Parameter	Symbol	Values			Unit	Note or condition
		Min.	Typ.	Max.		
Supply decoupling capacitor	C1	30	100	–	nF	1)
SDO pull-up resistor (open-drain)	R1	3	5	–	kΩ	Valid for SDO open-drain configuration
SDO/SDI resistor (half-duplex)	R2	0	500	–	Ω	Resistor to connect SDO and SDI pin for half-duplex
VPROG resistor (pull-down)	R3	–	10	–	kΩ	Pull-down resistor used for EEPROM programming

1) The nominal capacitance and associated tolerance of the supply decoupling capacitor has to be chosen such that the minimum value specified here is not violated under operating conditions and over lifetime.

6 Package

The package is a PG-DFN-8-1 as shown below:

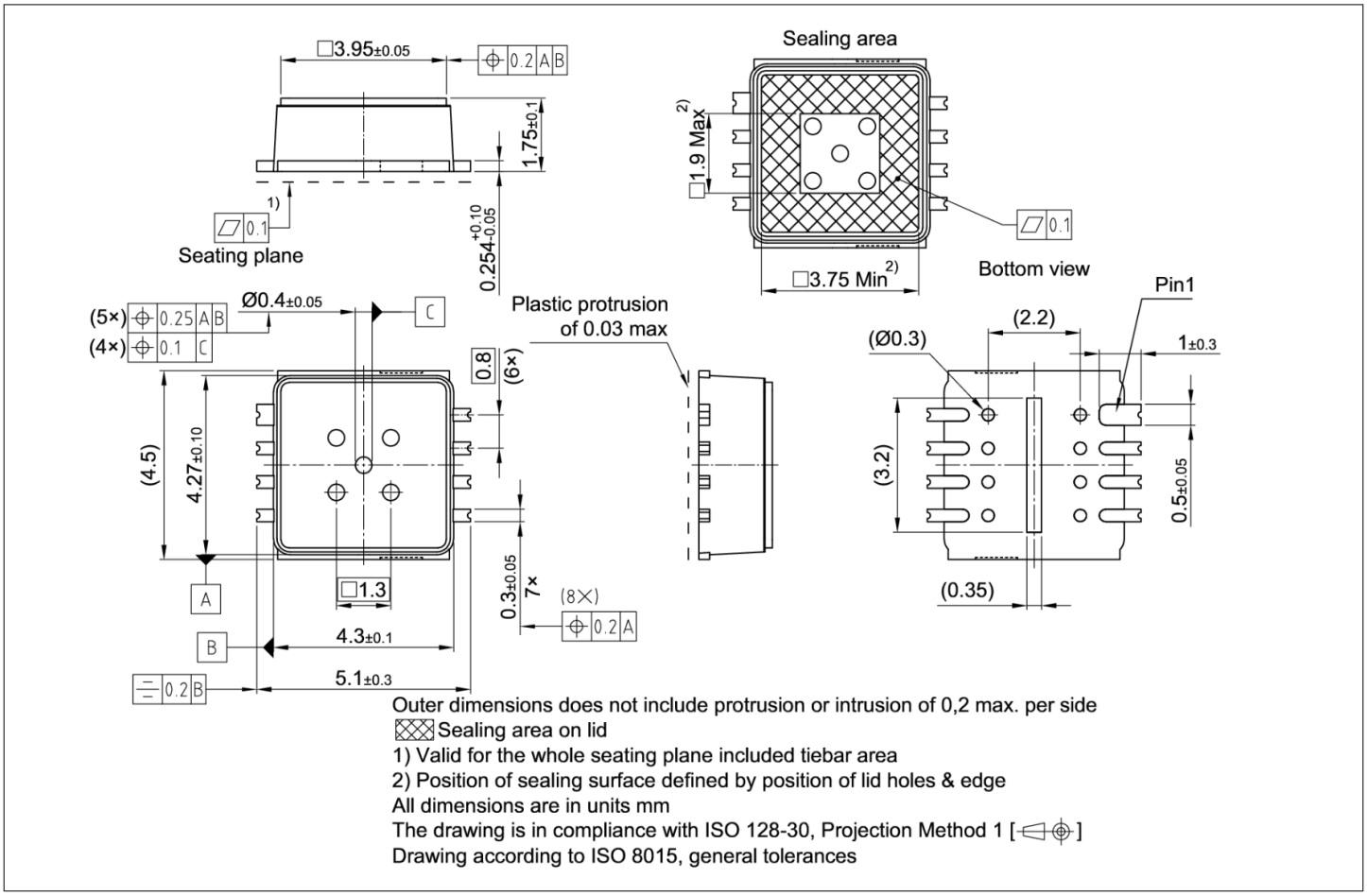

Figure 32 PG-DFN-8-1 outlines

Green Product (RoHS compliant)

To meet the world-wide users requirements for environmentally friendly products and to be compliant with government regulations the device is available as a green product. Green products are RoHS-Compliant (that is, Pb-free finish on leads and suitable for Pb-free soldering according to IPC/JEDEC J-STD-020).

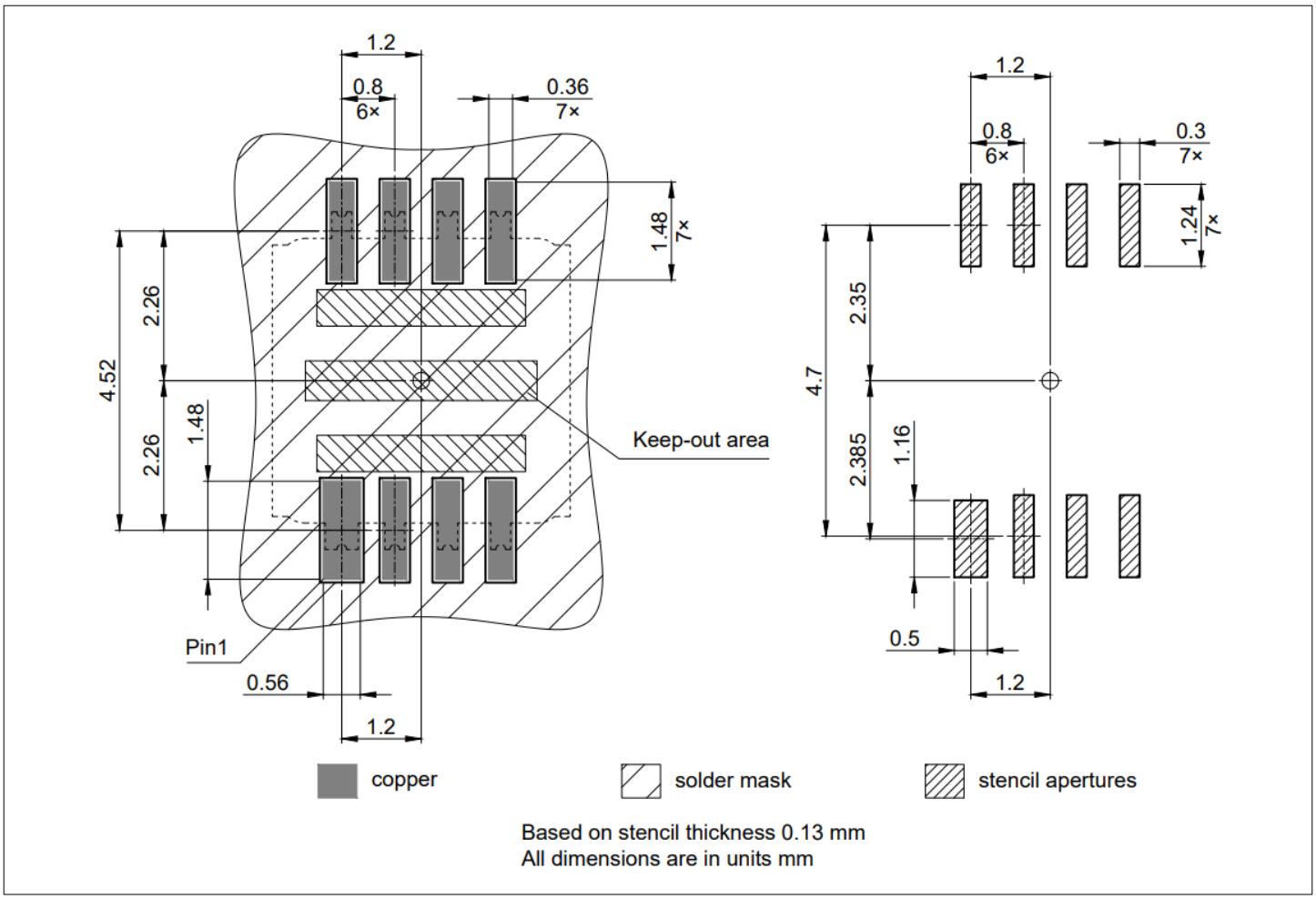

Figure 33 **Package footprint drawing**

Although the self-alignment effect due to the surface tension of the liquid solder supports the formation of reliable solder joints, the components have to be placed accurately according to their geometry. Manual positioning of the package is not recommended, but it is possible. For the PG-DFN package with a pad width of 0.3 mm and a pitch of 0.8 mm, an automatic pick-and-place machine is recommended to achieve reliable solder joints. The device is delivered in tape and reel packing which is suitable for being used in pick-and-place equipment.

6.1 Identification code

The identification code for the device is on the same side of the package as PIN 1.

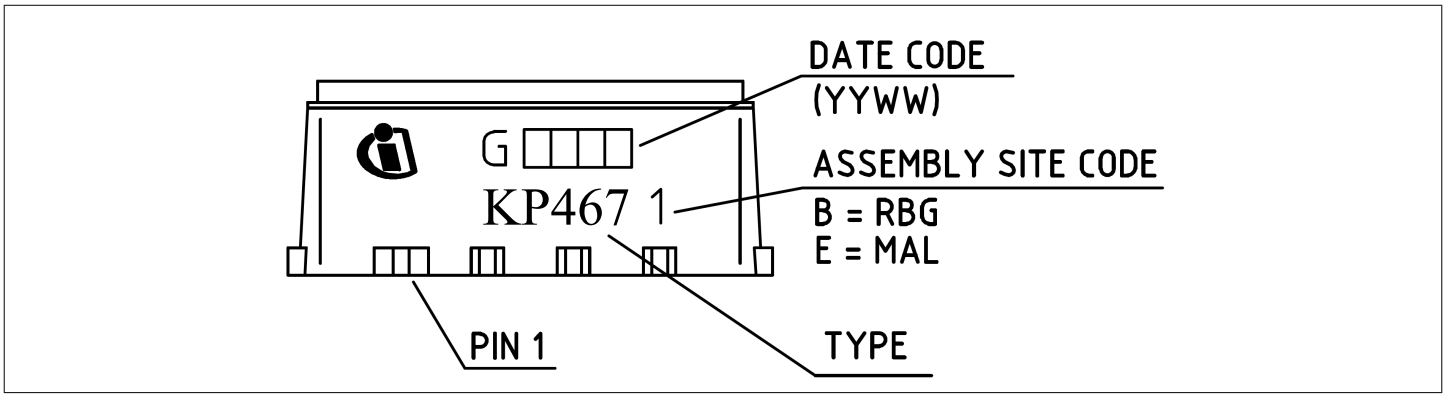

Figure 34 **Identification code**

7 Revision history

Table 33

Revision number	Date of release	Description of changes
1.00	2023-11-23	Initial release
1.10	2025-05-26	• Identification code updated • Note regarding delta pressure accuracy while the sensor is in normal mode added in chapter Delta pressure accuracy • Voltage VPROG information added in chapter Commands • Conditions rephrased in the table Low power monitoring configuration parameters for easier interpretation • Editorial changes
1.20	2026-03-25	• New pressure accuracy in chapter Transfer function pressure characteristics • Update of application circuit with resistor indicated for V_{PROG} pin. • Information regarding execution prior to LPM mode added in Entering low power monitoring mode. • Editorial changes

Trademarks

All referenced product or service names and trademarks are the property of their respective owners.

Edition 2026-03-25

Published by

Infineon Technologies AG

81726 Munich, Germany

© 2026 Infineon Technologies AG

All Rights Reserved.

Do you have a question about any aspect of this document?

Email: erratum@infineon.com

Document reference
IFX-cdt1758718803755

Important notice

The information given in this document shall in no event be regarded as a guarantee of conditions or characteristics ("Beschaffenheitsgarantie").

With respect to any examples, hints or any typical values stated herein and/or any information regarding the application of the product, Infineon Technologies hereby disclaims any and all warranties and liabilities of any kind, including without limitation warranties of non-infringement of intellectual property rights of any third party.

In addition, any information given in this document is subject to customer's compliance with its obligations stated in this document and any applicable legal requirements, norms and standards concerning customer's products and any use of the product of Infineon Technologies in customer's applications.

The data contained in this document is exclusively intended for technically trained staff. It is the responsibility of customer's technical departments to evaluate the suitability of the product for the intended application and the completeness of the product information given in this document with respect to such application.

Warnings

Due to technical requirements products may contain dangerous substances. For information on the types in question please contact your nearest Infineon Technologies office.

Except as otherwise explicitly approved by Infineon Technologies in a written document signed by authorized representatives of Infineon Technologies, Infineon Technologies' products may not be used in any applications where a failure of the product or any consequences of the use thereof can reasonably be expected to result in personal injury.