Description

The 9DBV0431 is a member of IDT's SOC-Friendly 1.8V Very-Low-Power (VLP) PCIe family. It can also be used for 50M or 125M Ethernet Applications via software frequency selection. The device has 4 output enables for clock management, and 3 selectable SMBus addresses.

Recommended Application

1.8V PCIe Gen1-2-3 Zero-Delay/Fan-out Buffer (ZDB/FOB)

Output Features

- 4 - 1-200Hz Low-Power (LP) HCSL DIF pairs w/Z_O=100ohms

Key Specifications

- DIF cycle-to-cycle jitter <50ps
- DIF output-to-output skew <50ps
- DIF *additive* phase jitter is <100fs rms for PCIe Gen3
- DIF *additive* phase jitter <300fs rms for 12k-20MHz

Features/Benefits

- LP-HCSL outputs save 8 resistors; minimal board space and BOM cost
- 53mW typical power consumption in PLL mode; minimal power consumption
- OE# pins; support DIF power management
- HCSL compatible differential input; can be driven by common clock sources
- Programmable Slew rate for each output; allows tuning for various line lengths
- Programmable output amplitude; allows tuning for various application environments
- Pin/software selectable PLL bandwidth and PLL Bypass; minimize phase jitter for each application
- Outputs blocked until PLL is locked; clean system start-up
- Software selectable 50MHz or 125MHz PLL operation; useful for Ethernet applications
- Configuration can be accomplished with strapping pins; SMBus interface not required for device control
- 3.3V tolerant SMBus interface works with legacy controllers
- Space saving 32-pin 5x5mm VFQFPN; minimal board space
- Selectable SMBus addresses; multiple devices can easily share an SMBus segment

Block Diagram

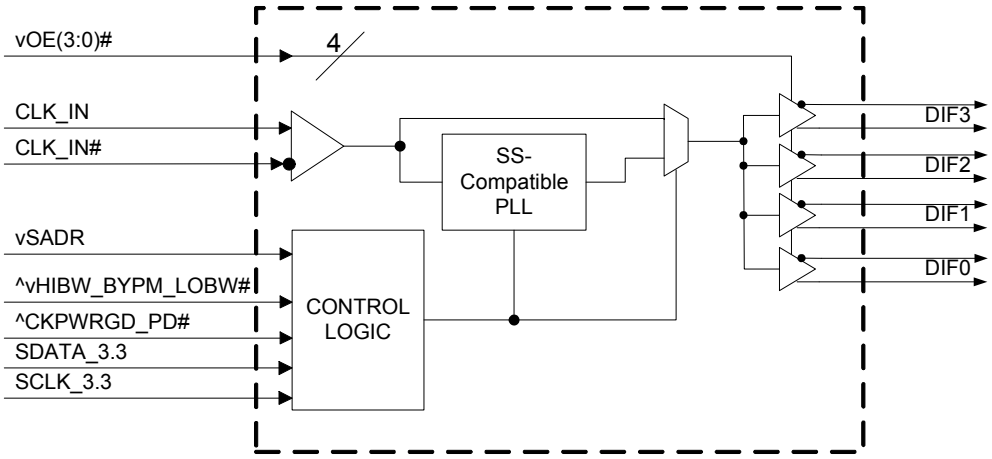

© 2019 Renesas Electronics Corporation

Pin Configuration

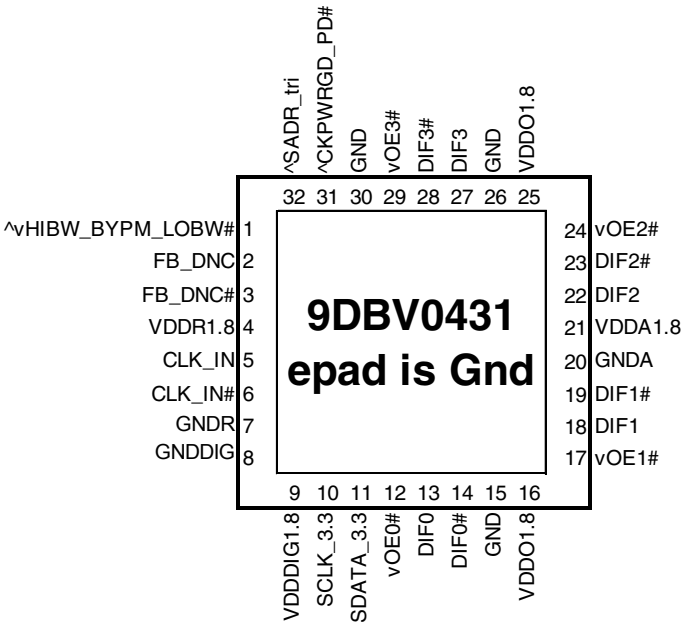

32-pin VFQFPN, 5x5 mm, 0.5mm pitch

^ prefix indicates internal 120KOhm pull up resistor

^v prefix indicates internal 120KOhm pull up AND pull down resistor (biased to VDD/2)

v prefix indicates internal 120KOhm pull down resistor

SMBus Address Selection Table

	SADR	Address	+ Read/Write bit
State of SADR on first application of CKPWRGD_PD#	0	1101011	x
	M	1101100	x
	1	1101101	x

Power Management Table

CKPWRGD_PD#	CLK_IN	SMBus OEx bit	OEx# Pin	DIFx		PLL
				True O/P	Comp. O/P	
0	X	X	X	Low	Low	Off
1	Running	0	X	Low	Low	On[1]
1	Running	1	0	Running	Running	On[1]
1	Running	1	1	Low	Low	On[1]

1. If Bypass mode is selected, the PLL will be off, and outputs will be running.

Power Connections

Pin Number		Description
VDD	GND	
4	7	Input receiver analog
9	8	Digital Power
16, 25	15,20,26,30	DIF outputs
21	20	PLL Analog

PLL Operating Mode

HiBW_BypM_LoBW#	MODE	Byte1 [7:6] Readback	Byte1 [4:3] Control
0	PLL Lo BW	00	00
M	Bypass	01	01
1	PLL Hi BW	11	11

Frequency Select Table

FSEL Byte3 [4:3]	CLK_IN (MHz)	DIFx (MHz)
00 (Default)	100.00	CLK_IN
01	50.00	CLK_IN
10	125.00	CLK_IN
11	Reserved	Reserved

© 2019 Renesas Electronics Corporation

Pin Descriptions

Pin#	Pin Name	Type	Pin Description
1	^vHIBW_BYPM_LOB	LATCHED IN	Trilevel input to select High BW, Bypass or Low BW mode. See PLL Operating Mode Table for Details.
2	FB_DNC	DNC	True clock of differential feedback. The feedback output and feedback input are connected internally on this pin. Do not connect anything to this pin.
3	FB_DNC#	DNC	Complement clock of differential feedback. The feedback output and feedback input are connected internally on this pin. Do not connect anything to this pin.
4	VDDR1.8	PWR	1.8V power for differential input clock (receiver). This VDD should be treated as an Analog power rail and filtered appropriately.
5	CLK_IN	IN	True Input for differential reference clock.
6	CLK_IN#	IN	Complementary Input for differential reference clock.
7	GNDR	GND	Analog Ground pin for the differential input (receiver)
8	GNDDIG	GND	Ground pin for digital circuitry
9	VDDDIG1.8	PWR	1.8V digital power (dirty power)
10	SCLK_3.3	IN	Clock pin of SMBus circuitry, 3.3V tolerant.
11	SDATA_3.3	I/O	Data pin for SMBus circuitry, 3.3V tolerant.
12	vOE0#	IN	Active low input for enabling DIF pair 0. This pin has an internal pull-down. 1 =disable outputs, 0 = enable outputs
13	DIF0	OUT	Differential true clock output
14	DIF0#	OUT	Differential Complementary clock output
15	GND	GND	Ground pin.
16	VDDO1.8	PWR	Power supply for outputs, nominally 1.8V.
17	vOE1#	IN	Active low input for enabling DIF pair 1. This pin has an internal pull-down. 1 =disable outputs, 0 = enable outputs
18	DIF1	OUT	Differential true clock output
19	DIF1#	OUT	Differential Complementary clock output
20	GNDA	GND	Ground pin for the PLL core.
21	VDDA1.8	PWR	1.8V power for the PLL core.
22	DIF2	OUT	Differential true clock output
23	DIF2#	OUT	Differential Complementary clock output
24	vOE2#	IN	Active low input for enabling DIF pair 2. This pin has an internal pull-down. 1 =disable outputs, 0 = enable outputs
25	VDDO1.8	PWR	Power supply for outputs, nominally 1.8V.
26	GND	GND	Ground pin.
27	DIF3	OUT	Differential true clock output
28	DIF3#	OUT	Differential Complementary clock output
29	vOE3#	IN	Active low input for enabling DIF pair 3. This pin has an internal pull-down. 1 =disable outputs, 0 = enable outputs
30	GND	GND	Ground pin.
31	^CKPWRGD_PD#	IN	Input notifies device to sample latched inputs and start up on first high assertion. Low enters Power Down Mode, subsequent high assertions exit Power Down Mode. This pin has internal pull-up resistor.
32	^SADR_tri	LATCHED IN	Tri-level latch to select SMBus Address. See SMBus Address Selection Table.
33	ePad	GND	Connect epad to ground.

© 2019 Renesas Electronics Corporation

Test Loads

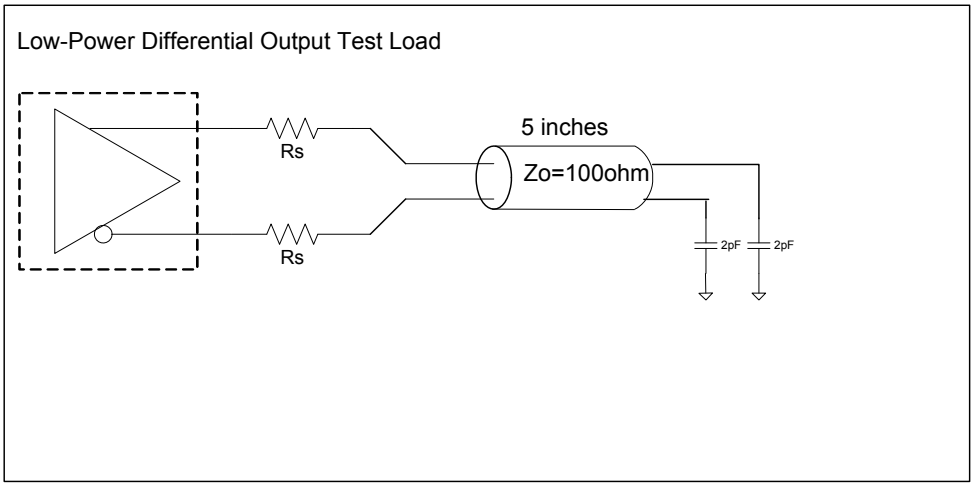

Alternate Differential Output Terminations

Rs	Zo	Units
33	100	Ohms
27	85	

Driving LVDS

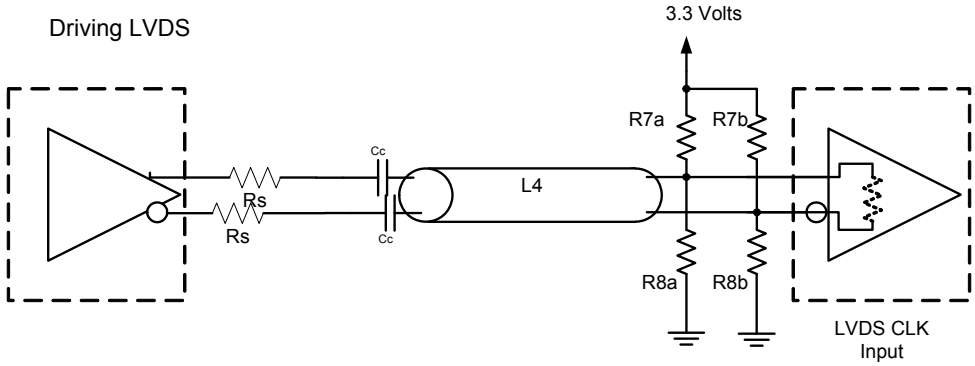

Driving LVDS inputs with the 9DBV0431

Component	Value		Note
	Receiver has termination	Receiver does not have termination	
R7a, R7b	10K ohm	140 ohm	
R8a, R8b	5.6K ohm	75 ohm	
Cc	0.1 uF	0.1 uF	
Vcm	1.2 volts	1.2 volts	

© 2019 Renesas Electronics Corporation

Absolute Maximum Ratings

Stresses above the ratings listed below can cause permanent damage to the 9DBV0431. These ratings, which are standard values for IDT commercially rated parts, are stress ratings only. Functional operation of the device at these or any other conditions above those indicated in the operational sections of the specifications is not implied. Exposure to absolute maximum rating conditions for extended periods can affect product reliability. Electrical parameters are guaranteed only over the recommended operating temperature range.

PARAMETER	SYMBOL	CONDITIONS	MIN	TYP	MAX	UNITS	NOTES
Power supply voltage	VDDxx	Applies to all VDD pins	-0.5		2.5	V	1,2
Input Voltage	V_{IN}		-0.5		V_{DD}+0.5V	V	1, 3
Input High Voltage, SMBus	V_{IHSMB}	SMBus clock and data pins			3.6V	V	1
Storage Temperature	Ts		-65		150	°C	1
Junction Temperature	Tj				125	°C	1
Input ESD protection	ESD prot	Human Body Model	2000			V	1

[1]Guaranteed by design and characterization, not 100% tested in production.

[2] Operation under these conditions is neither implied nor guaranteed.

[3] Not to exceed 2.5V.

Electrical Characteristics–Clock Input Parameters

TA = T_{COM} or $T_{IND;}$ Supply Voltage per VDD of normal operation conditions, See Test Loads for Loading Conditions

PARAMETER	SYMBOL	CONDITIONS	MIN	TYP	MAX	UNITS	NOTES
Input High Voltage - DIF_IN	V_{IHDIF}	Differential inputs (single-ended measurement)	600	800	1150	mV	1
Input Low Voltage - DIF_IN	V_{ILDIF}	Differential inputs (single-ended measurement)	V_{SS} - 300	0	300	mV	1
Input Common Mode Voltage - DIF_IN	V_{COM}	Common Mode Input Voltage	300		725	mV	1
Input Amplitude - DIF_IN	V_{SWING}	Peak to Peak value (VIHDIF - VILDIF), single-ended	300		1450	mV	1
Input Slew Rate - DIF_IN	dv/dt	Measured differentially	0.4			V/ns	1,2
Input Leakage Current	I_{IN}	$V_{IN} = V_{DD}$, V_{IN} = GND	-5		5	uA	1
Input Duty Cycle	d_{tin}	Measurement from differential wavefrom	45		55	%	1
Input Jitter - Cycle to Cycle	J_{DIFIn}	Differential Measurement	0		150	ps	1

[1] Guaranteed by design and characterization, not 100% tested in production.

[2] Slew rate measured through +/-75mV window centered around differential zero

© 2019 Renesas Electronics Corporation

Electrical Characteristics–Input/Supply/Common Parameters–Normal Operating Conditions

TA = T_{COM} or $T_{IND;}$ Supply Voltage per VDD of normal operation conditions, See Test Loads for Loading Conditions

PARAMETER	SYMBOL	CONDITIONS	MIN	TYP	MAX	UNITS	NOTES
1.8V Supply Voltage	VDD	Supply voltage for core, analog and LVCMOS outputs	1.7	1.8	1.9	V	1
Ambient Operating Temperature	T_{COM}	Commmercial range	0	25	70	°C	1
	T_{IND}	Industrial range	-40	25	85	°C	1
Input High Voltage	V_{IH}	Single-ended inputs, except SMBus	0.75 V_{DD}		V_{DD} + 0.3	V	1
Input Mid Voltage	V_{IM}	Single-ended tri-level inputs ('_tri' suffix)	0.4 V_{DD}		0.6 V_{DD}	V	1
Input Low Voltage	V_{IL}	Single-ended inputs, except SMBus	-0.3		0.25 V_{DD}	V	1
Input Current	I_{IN}	Single-ended inputs, V_{IN} = GND, V_{IN} = VDD	-5		5	uA	1
	I_{INP}	Single-ended inputs V_{IN} = 0 V; Inputs with internal pull-up resistors V_{IN} = VDD; Inputs with internal pull-down resistors	-200		200	uA	1
Input Frequency	F_{ibyp}	Bypass mode	1		200	MHz	2
	$F_{ipll100}$	100MHz PLL mode	50	100	140	MHz	2
	$F_{ipll125}$	125MHz PLL mode	62.5	125	175	MHz	2
	F_{ipll62}	50MHz PLL mode	25	50	65	MHz	2
Pin Inductance	L_{pin}				7	nH	1
Capacitance	C_{IN}	Logic Inputs, except DIF_IN	1.5		5	pF	1
	C_{INDIF_IN}	DIF_IN differential clock inputs	1.5		2.7	pF	1,6
	C_{OUT}	Output pin capacitance			6	pF	1
Clk Stabilization	T_{STAB}	From V_{DD} Power-Up and after input clock stabilization or de-assertion of PD# to 1st clock		0.6	1	ms	1,2
Input SS Modulation Frequency	f_{MODIN}	Allowable Frequency (Triangular Modulation)	30	31.5	33	kHz	1
OE# Latency	$t_{LATOE\#}$	DIF start after OE# assertion DIF stop after OE# deassertion	1		3	clocks	1,3
Tdrive_PD#	t_{DRVPD}	DIF output enable after PD# de-assertion		175	300	us	1,3
Tfall	t_F	Fall time of single-ended control inputs			5	ns	1,2
Trise	t_R	Rise time of single-ended control inputs			5	ns	1,2
SMBus Input Low Voltage	V_{ILSMB}	V_{DDSMB} = 3.3V, see note 4 for V_{DDSMB} < 3.3V			0.8	V	1,4
SMBus Input High Voltage	V_{IHSMB}	V_{DDSMB} = 3.3V, see note 5 for V_{DDSMB} < 3.3V	2.1		3.6	V	1,5
SMBus Output Low Voltage	V_{OLSMB}	@ I_{PULLUP}			0.4	V	1
SMBus Sink Current	I_{PULLUP}	@ V_{OL}	4			mA	1
Nominal Bus Voltage	V_{DDSMB}		1.7		3.6	V	1
SCLK/SDATA Rise Time	t_{RSMB}	(Max VIL - 0.15) to (Min VIH + 0.15)			1000	ns	1
SCLK/SDATA Fall Time	t_{FSMB}	(Min VIH + 0.15) to (Max VIL - 0.15)			300	ns	1
SMBus Operating Frequency	f_{MAXSMB}	Maximum SMBus operating frequency			400	kHz	1,7

[1]Guaranteed by design and characterization, not 100% tested in production.

[2]Control input must be monotonic from 20% to 80% of input swing.

[3]Time from deassertion until outputs are >200 mV

[4] For V_{DDSMB} < 3.3V, V_{ILSMB} <= 0.25V_{DDSMB}

[5] For V_{DDSMB} < 3.3V, V_{IHSMB} >= 0.7V_{DDSMB}

[6]DIF_IN input

[7]The differential input clock must be running for the SMBus to be active

© 2019 Renesas Electronics Corporation

Electrical Characteristics–DIF 0.7V Low Power HCSL Outputs

TA = T_{COM} or $T_{IND;}$ Supply Voltage per VDD of normal operation conditions, See Test Loads for Loading Conditions

PARAMETER	SYMBOL	CONDITIONS	MIN	TYP	MAX	UNITS	NOTES
Slew rate	Trf	Scope averaging on 3.0V/ns setting	2	3.2	4	V/ns	1, 2, 3
		Scope averaging on 2.0V/ns setting	1.3	2.3	3.3	V/ns	1, 2, 3
Slew rate matching	ΔTrf	Slew rate matching, Scope averaging on		5.4	20	%	1, 2, 4
Voltage High	V_{HIGH}	Statistical measurement on single-ended signal using oscilloscope math function. (Scope averaging on)	660	779	850	mV	1,7
Voltage Low	V_{LOW}		-150	21	150		1,7
Max Voltage	Vmax	Measurement on single ended signal using absolute value. (Scope averaging off)		835	1150	mV	1
Min Voltage	Vmin		-300	-42			1
Vswing	Vswing	Scope averaging off	300	1515		mV	1,2,7
Crossing Voltage (abs)	Vcross_abs	Scope averaging off	250	409	550	mV	1,5,7
Crossing Voltage (var)	Δ-Vcross	Scope averaging off		14	140	mV	1, 6

[1]Guaranteed by design and characterization, not 100% tested in production. C_L = 2pF with R_S = 33Ω for Zo = 50Ω (100Ω differential trace impedance).

[2] Measured from differential waveform

[3] Slew rate is measured through the Vswing voltage range centered around differential 0V. This results in a +/-150mV window around differential 0V.

[4] Matching applies to rising edge rate for Clock and falling edge rate for Clock#. It is measured using a +/-75mV window centered on the average cross point where Clock rising meets Clock# falling. The median cross point is used to calculate the voltage thresholds the oscilloscope is to use for the edge rate calculations.

[5] Vcross is defined as voltage where Clock = Clock# measured on a component test board and only applies to the differential rising edge (i.e. Clock rising and Clock# falling).

[6] The total variation of all Vcross measurements in any particular system. Note that this is a subset of Vcross_min/max (Vcross absolute) allowed. The intent is to limit Vcross induced modulation by setting Δ-Vcross to be smaller than Vcross absolute.

[7] At default SMBus settings.

Electrical Characteristics–Current Consumption

TA = T_{COM} or $T_{IND;}$ Supply Voltage per VDD of normal operation conditions, See Test Loads for Loading Conditions

PARAMETER	SYMBOL	CONDITIONS	MIN	TYP	MAX	UNITS	NOTES
Operating Supply Current (PLL Mode)	I_{DDROP}	VDDR, @100MHz		4.2	6	mA	1
	I_{DDOP}	VDDA + VDD1.8, @100MHz		27	33	mA	1
Operating Supply Current (PLL-Bypass Mode)	I_{DDROP}	VDDR, @100MHz		2.2	3	mA	1
	I_{DDOP}	VDDA + VDD1.8, @100MHz		20	25	mA	1
Powerdown Current	I_{DDRPD}	VDDR, CKPWRGD_PD# = 0		0.014	0.3	mA	1,2
	I_{DDPD}	VDDA + VDD1.8, CKPWRGD_PD# = 0		0.95	1.2	mA	1, 2

[1] Guaranteed by design and characterization, not 100% tested in production.

[2] Input clock stopped, and CKPWRGD_PD# pin low.

© 2019 Renesas Electronics Corporation

Electrical Characteristics–Output Duty Cycle, Jitter, Skew and PLL Characteristics

TA = T_{COM} or $T_{IND;}$ Supply Voltage per VDD of normal operation conditions, See Test Loads for Loading Conditions

PARAMETER	SYMBOL	CONDITIONS	MIN	TYP	MAX	UNITS	NOTES
PLL Bandwidth	BW	-3dB point in High BW Mode	2	2.7	4	MHz	1,5
		-3dB point in Low BW Mode	1	1.4	2	MHz	1,5
PLL Jitter Peaking	t_{JPEAK}	Peak Pass band Gain		1.2	2	dB	1
Duty Cycle	t_{DC}	Measured differentially, PLL Mode	45	50.1	55	%	1
Duty Cycle Distortion	t_{DCD}	Measured differentially, Bypass Mode @100MHz	-1	-0.1	1	%	1,3
Skew, Input to Output	t_{pdBYP}	Bypass Mode, V_T = 50%	2550	3370	4200	ps	1
	t_{pdPLL}	PLL Mode V_T = 50%	0	112	200	ps	1,4
Skew, Output to Output	t_{sk3}	Commercial Operating Range, V_T = 50%		33	50	ps	1,4
		Industrial Operating Range, V_T = 50%		33	55	ps	1,4
Jitter, Cycle to cycle	$t_{jcyc-cyc}$	PLL mode		13	50	ps	1,2
		Additive Jitter in Bypass Mode		0.1	1	ps	1,2

[1] Guaranteed by design and characterization, not 100% tested in production.

[2] Measured from differential waveform

[3] Duty cycle distortion is the difference in duty cycle between the output and the input clock when the device is operated in bypass mode.

[4] All outputs at default slew rate

[5] The MIN/TYP/MAX values of each BW setting track each other, i.e., Low BW MAX will never occur with Hi BW MIN.

Electrical Characteristics–Phase Jitter Parameters

TA = T_{COM} or $T_{IND;}$ Supply Voltage per VDD of normal operation conditions, See Test Loads for Loading Conditions

PARAMETER	SYMBOL	CONDITIONS	MIN	TYP	MAX	INDUSTRY LIMIT	UNITS	Notes
Phase Jitter, PLL Mode	$t_{jphPCIeG1}$	PCIe Gen 1		32	52	86	ps (p-p)	1,2,3
	$t_{jphPCIeG2}$	PCIe Gen 2 Lo Band 10kHz < f < 1.5MHz		0.8	1.4	3	ps (rms)	1,2
		PCIe Gen 2 High Band 1.5MHz < f < Nyquist (50MHz)		2.4	2.6	3.1	ps (rms)	1,2
	$t_{jphPCIeG3}$	PCIe Gen 3 (PLL BW of 2-4MHz, CDR = 10MHz)		0.5	0.6	1	ps (rms)	1,2,4
	$t_{jphSGMII}$	125MHz, 1.5MHz to 10MHz, -20dB/decade rollover < 1.5MHz, -40db/decade rolloff > 10MHz		1.9	2.2	3	ps (rms)	1,6
Additive Phase Jitter, Bypass Mode	$t_{jphPCIeG1}$	PCIe Gen 1		0.1	5.0	N/A	ps (p-p)	1,2,3
	$t_{jphPCIeG2}$	PCIe Gen 2 Lo Band 10kHz < f < 1.5MHz		0.2	0.3	N/A	ps (rms)	1,2,4
		PCIe Gen 2 High Band 1.5MHz < f < Nyquist (50MHz)		0.05	0.1	N/A	ps (rms)	1,2,4
	$t_{jphPCIeG3}$	PCIe Gen 3 (PLL BW of 2-4MHz, CDR = 10MHz)		0.05	0.1	N/A	ps (rms)	1,2,4
	$t_{jphSGMIIM0}$	125MHz, 1.5MHz to 10MHz, -20dB/decade rollover < 1.5MHz, -40db/decade rolloff > 10MHz		165	200	N/A	fs (rms)	1,6
	$t_{jphSGMIIM1}$	125MHz, 12kHz to 20MHz, -20dB/decade rollover < 1.5MHz, -40db/decade rolloff > 10MHz		251	300	N/A	fs (rms)	1,6

[1]Guaranteed by design and characterization, not 100% tested in production.

[2] See http://www.pcisig.com for complete specs

[3] Sample size of at least 100K cycles. This figures extrapolates to 108ps pk-pk @ 1M cycles for a BER of 1-12.

[4] For RMS figures, additive jitter is calculated by solving the following equation: Additive jitter = SQRT[(total jitter)^2 - (input jitter)^2]

[5] Driven by 9FGV0831 or equivalent

[6] Driven by Rohde&Schwarz SMA100

© 2019 Renesas Electronics Corporation

Additive Phase Jitter Plot: 125M (12kHz to 20MHz)

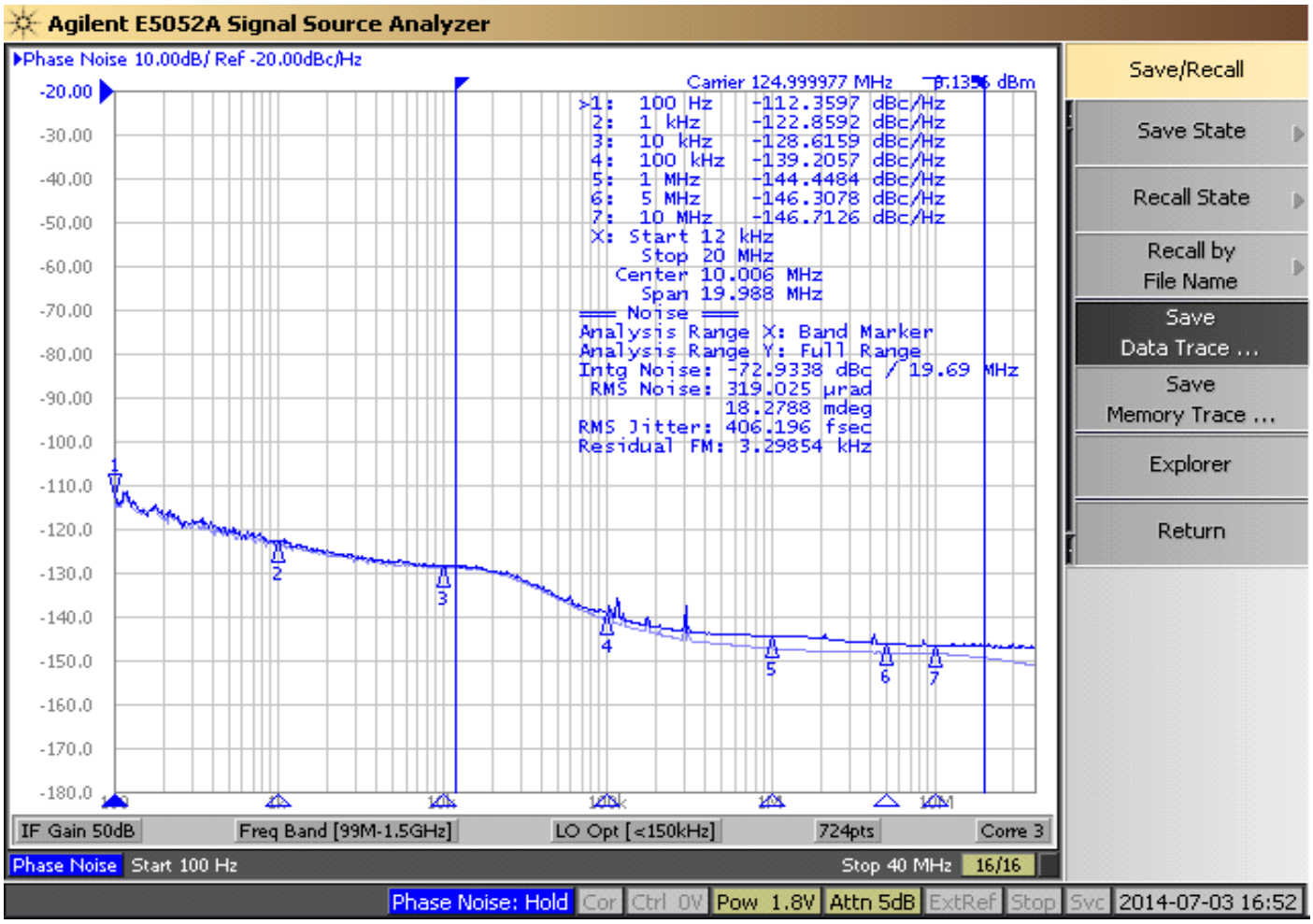

© 2019 Renesas Electronics Corporation

General SMBus Serial Interface Information

How to Write

- Controller (host) sends a start bit
- Controller (host) sends the write address
- IDT clock will **acknowledge**
- Controller (host) sends the beginning byte location = N
- IDT clock will **acknowledge**
- Controller (host) sends the byte count = X
- IDT clock will **acknowledge**
- Controller (host) starts sending Byte **N through Byte N+X-1**
- IDT clock will **acknowledge** each byte **one at a time**
- Controller (host) sends a Stop bit

Index Block Write Operation			
Controller (Host)			IDT (Slave/Receiver)
T	starT bit		
Slave Address			
WR	WRite		
			ACK
Beginning Byte = N			
			ACK
Data Byte Count = X			
			ACK
Beginning Byte N		X Byte	
			ACK
O			
O			O
O			O
			O
Byte N + X - 1			
			ACK
P	stoP bit		

Note: SMBus address is latched on SADR pin.

How to Read

- Controller (host) will send a start bit
- Controller (host) sends the write address
- IDT clock will **acknowledge**
- Controller (host) sends the beginning byte location = N
- IDT clock will **acknowledge**
- Controller (host) will send a separate start bit
- Controller (host) sends the read address
- IDT clock will **acknowledge**
- IDT clock will send the data byte count = X
- IDT clock sends Byte **N+X-1**
- IDT clock sends **Byte 0 through Byte X (if $X_{(H)}$ was written to Byte 8)**
- Controller (host) will need to acknowledge each byte
- Controller (host) will send a not acknowledge bit
- Controller (host) will send a stop bit

Index Block Read Operation			
Controller (Host)			IDT (Slave/Receiver)
T	starT bit		
Slave Address			
WR	WRite		
			ACK
Beginning Byte = N			
			ACK
RT	Repeat starT		
Slave Address			
RD	ReaD		
			ACK
			Data Byte Count=X
ACK			
		X Byte	Beginning Byte N
ACK			
			O
O			O
O			O
O			
			Byte N + X - 1
N	Not acknowledge		
P	stoP bit		

© 2019 Renesas Electronics Corporation

SMBus Table: Output Enable Register [1]

Byte 0	Name	Control Function	Type	0	1	Default
Bit 7	Reserved					1
Bit 6	DIF OE3	Output Enable	RW	Low/Low	Enabled	1
Bit 5	DIF OE2	Output Enable	RW	Low/Low	Enabled	1
Bit 4	Reserved					1
Bit 3	DIF OE1	Output Enable	RW	Low/Low	Enabled	1
Bit 2	Reserved					1
Bit 1	DIF OE0	Output Enable	RW	Low/Low	Enabled	1
Bit 0	Reserved					1

1. A low on these bits will overide the OE# pin and force the differential output Low/Low

SMBus Table: PLL Operating Mode and Output Amplitude Control Register

Byte 1	Name	Control Function	Type	0	1	Default
Bit 7	PLLMODERB1	PLL Mode Readback Bit 1	R	See PLL Operating Mode Table		Latch
Bit 6	PLLMODERB0	PLL Mode Readback Bit 0	R			Latch
Bit 5	PLLMODE_SWCNTRL	Enable SW control of PLL Mode	RW	Values in B1[7:6] set PLL Mode	Values in B1[4:3] set PLL Mode	0
Bit 4	PLLMODE1	PLL Mode Control Bit 1	RW[1]	See PLL Operating Mode Table		0
Bit 3	PLLMODE0	PLL Mode Control Bit 0	RW[1]			0
Bit 2	Reserved					1
Bit 1	AMPLITUDE 1	Controls Output Amplitude	RW	00 = 0.6V	01 = 0.7V	1
Bit 0	AMPLITUDE 0		RW	10= 0.8V	11 = 0.9V	0

1. B1[5] must be set to a 1 for these bits to have any effect on the part.

SMBus Table: DIF Slew Rate Control Register

Byte 2	Name	Control Function	Type	0	1	Default
Bit 7	Reserved					1
Bit 6	SLEWRATESEL DIF3	Slew Rate Selection	RW	2 V/ns	3 V/ns	1
Bit 5	SLEWRATESEL DIF2	Slew Rate Selection	RW	2 V/ns	3 V/ns	1
Bit 4	Reserved					1
Bit 3	SLEWRATESEL DIF1	Slew Rate Selection	RW	2 V/ns	3 V/ns	1
Bit 2	Reserved					1
Bit 1	SLEWRATESEL DIF0	Slew Rate Selection	RW	2 V/ns	3 V/ns	1
Bit 0	Reserved					1

SMBus Table: Frequency Select Control Register

Byte 3	Name	Control Function	Type	0	1	Default
Bit 7	Reserved					1
Bit 6	Reserved					1
Bit 5	FREQ_SEL_EN	Enable SW selection of frequency	RW	SW frequency change disabled	SW frequency change enabled	0
Bit 4	FSEL1	Freq. Select Bit 1	RW[1]	See Frequency Select Table		0
Bit 3	FSEL0	Freq. Select Bit 0	RW[1]			0
Bit 2	Reserved					1
Bit 1	Reserved					1
Bit 0	SLEWRATESEL FB	Adjust Slew Rate of FB	RW	2 V/ns	3 V/ns	1

1. B3[5] must be set to a 1 for these bits to have any effect on the part.

Byte 4 is Reserved and reads back 'hFF

© 2019 Renesas Electronics Corporation

SMBus Table: Revision and Vendor ID Register

Byte 5	Name	Control Function	Type	0	1	Default
Bit 7	RID3	Revision ID	**R**	A rev = 0000		0
Bit 6	RID2		**R**			0
Bit 5	RID1		**R**			0
Bit 4	RID0		**R**			0
Bit 3	VID3	VENDOR ID	**R**	0001 = IDT		0
Bit 2	VID2		**R**			0
Bit 1	VID1		**R**			0
Bit 0	VID0		**R**			1

SMBus Table: Device Type/Device ID

Byte 6	Name	Control Function	Type	0	1	Default
Bit 7	Device Type1	Device Type	**R**	00 = FGV, 01 = DBV, 10 = DMV, 11= Reserved		0
Bit 6	Device Type0		**R**			1
Bit 5	Device ID5	Device ID	**R**	000100 binary or 04 hex		0
Bit 4	Device ID4		**R**			0
Bit 3	Device ID3		**R**			0
Bit 2	Device ID2		**R**			1
Bit 1	Device ID1		**R**			0
Bit 0	Device ID0		**R**			0

SMBus Table: Byte Count Register

Byte 7	Name	Control Function	Type	0	1	Default
Bit 7	Reserved					0
Bit 6	Reserved					0
Bit 5	Reserved					0
Bit 4	BC4	Byte Count Programming	RW	Writing to this register will configure how many bytes will be read back, default is = 8 bytes.		0
Bit 3	BC3		RW			1
Bit 2	BC2		RW			0
Bit 1	BC1		RW			0
Bit 0	BC0		RW			0

© 2019 Renesas Electronics Corporation

Marking Diagrams

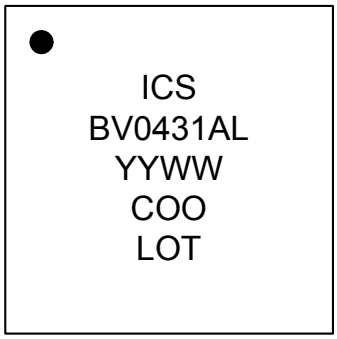

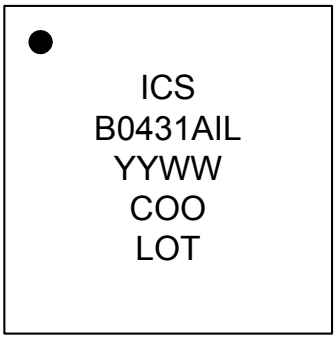

Notes:

1. “LOT” is the lot sequence number.
2. “COO” denotes country of origin.
3. YYWW is the last two digits of the year and week that the part was assembled.
4. Line 2: truncated part number
5. “L” denotes RoHS compliant package.
6. “I” denotes industrial temperature range device.

Thermal Characteristics

PARAMETER	SYMBOL	CONDITIONS	PKG	TYP VALUE	UNITS	NOTES
Thermal Resistance	θ_{JC}	Junction to Case	NLG32	42	°C/W	1
	θ_{Jb}	Junction to Base		2.4	°C/W	1
	θ_{JA0}	Junction to Air, still air		39	°C/W	1
	θ_{JA1}	Junction to Air, 1 m/s air flow		33	°C/W	1
	θ_{JA3}	Junction to Air, 3 m/s air flow		28	°C/W	1
	θ_{JA5}	Junction to Air, 5 m/s air flow		27	°C/W	1

[1]ePad soldered to board

© 2019 Renesas Electronics Corporation

Package Outline and Package Dimensions (NLG32)

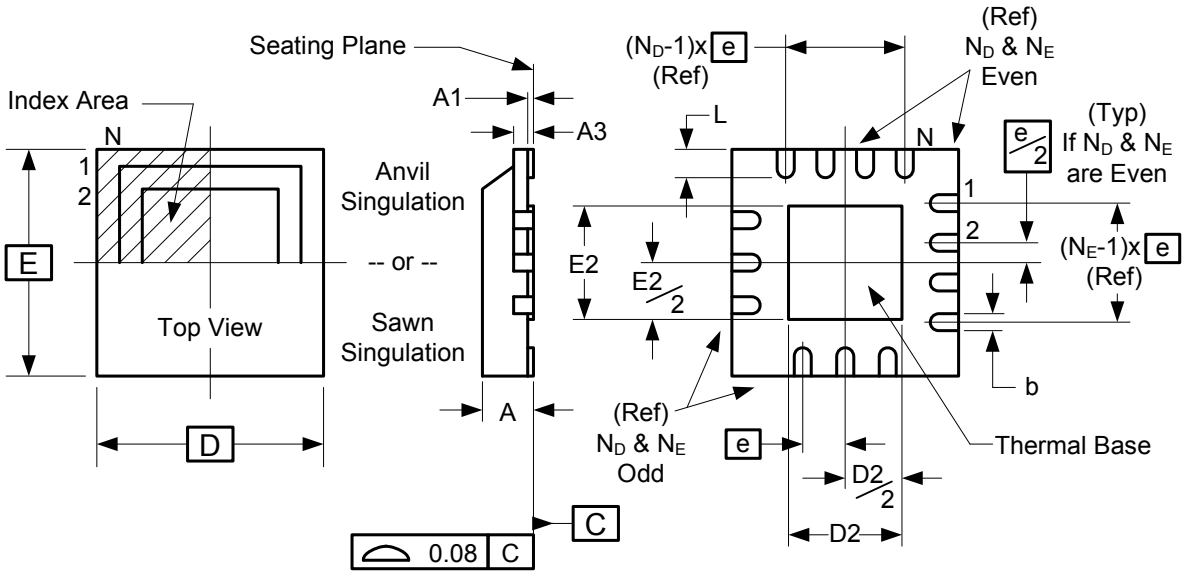

	Millimeters	
Symbol	**Min**	**Max**
A	0.80	1.00
A1	0	0.05
A3	0.20 Reference	
b	0.18	0.3
e	0.50 BASIC	
D x E BASIC	5.00 x 5.00	
D2 MIN./MAX.	3.00	3.30
E2 MIN./MAX.	3.00	3.30
L MIN./MAX.	0.30	0.50
N	32	
N_D	8	
N_E	8	

Ordering Information

Part/Order Number	Shipping Packaging	Package	Temperature
9DBV0431AKLF	Trays	32-pin VFQFPN	0 to +70° C
9DBV0431AKLFT	Tape and Reel	32-pin VFQFPN	0 to +70° C
9DBV0431AKILF	Trays	32-pin VFQFPN	-40 to +85° C
9DBV0431AKILFT	Tape and Reel	32-pin VFQFPN	-40 to +85° C

"LF" suffix to the part number are the Pb-Free configuration and are RoHS compliant.

“A” is the device revision designator (will not correlate with the datasheet revision).

© 2019 Renesas Electronics Corporation

Revision History

Rev.	Initiator	Issue Date	Description	Page #
A	RDW	8/13/2012	1. Removed "Differential" from DS title and Recommended Application, corrected typo's in Description. 2. Corrected spelling error in pullup/pulldown text under pinout 3. Updated all electrical tables and added "Industry Limit" column to "Phase Jitter Parameters". 4. Updated Byte3[0] to be consistent with Byte 2. Updated Byte6[7:6] definition. 5. Added thermal data to page 12. 6. Added NLG32 to "Package Outline and Package Dimensions" on page 13. 7. Move to final	1,2,5-8,10, 12,13
B	RDW	2/28/2013	1. "Input/Supply/Common Parameters" table modified as follows: a. Updated Single-ended input logic thresholds to include missing mid-level on tri-level inputs. Adjusted logic thresholds as follows: i. Changed VIH min. from 0.65*VDD to 0.75*VDD ii. Changed VIL max. from 0.35*VDD to 0.25*VDD iii. Added missing mid-level input voltage spec (VIM) of 0.4*VDD to 0.6*VDD. iv. Clarified conditions for these specifications, accordingly. b. Clarified the operating conditions and voltages of the SMBus to make it clear that the SMBus operates at <3.3V by addition of footnotes 4 and 5 to "Input/Supply/Common Parameters" table. 2. Slight modifications of Slew Rates and typical values in the "DIF 0.7V Low Power Differential Outputs" table. 3. "Current Consumption" table modifed as follows: a. Overall current consumption values lowered b. VDDA is now grouped with VDD1.8 instead of VDDR c. Added separate current specs for PLL bypass mode. d. Clarified that CKPWRDG_PD# is low for power down current. 4. "Output Duty Cycle, Jitter, Skew and PLL Characterisitics" table modifed as follows: a. Bypass mode Input-to-Output skew changed from 3000 to 4500ps to 2550 to 4200ps. Typical value reduced from 3500ps to 3370ps. b. Separate Output-to-Output skew spec added for Industrial temp. c. Additive cycle-to-cycle jitter spec reduced to 1ps max. 5. "Phase Jitter Parameters" modifed as follows: a. Corrected typo in PLL Mode conditions for tjPHSGMII. Frequency integration range is 1.5MHz to 10MHz. Bypass mode conditions were correct.	5-8
C	RDW	11/26/2014	1. Updated front page text for consistency and updated block diagram resistor colors to highlight internal resistors. 2. Updated max frequency of 100MHz PLL mode from 110MHz to 140MHz 3. Updated max frequency of 125MHz PLL mode from 137.5MHz to 175MHz 4. Updated max frequency of 50MHz PLL mode from 55MHz to 65MHz 5. Updated Key Specifications with addtive phase jitter. 6. Added additive phase jitter plot to specifications.	Various
D	RDW	4/3/2015	1. Updated block diagram with new format showing individual outputs instead of bussed outputs. 2. Updated pin out and pin descriptions to show ePad on package connected to ground.	1-4
E	RDW	4/22/2016	1. Updated max frequency of 100MHz PLL mode to 140MHz 2. Updated max frequency of 125MHz PLL mode to 175MHz 3. Updated max frequency of 50MHz PLL mode to 65MHz	6

© 2019 Renesas Electronics Corporation

Notice

1. Descriptions of circuits, software and other related information in this document are provided only to illustrate the operation of semiconductor products and application examples. You are fully responsible for the incorporation or any other use of the circuits, software, and information in the design of your product or system. Renesas Electronics disclaims any and all liability for any losses and damages incurred by you or third parties arising from the use of these circuits, software, or information.
2. Renesas Electronics hereby expressly disclaims any warranties against and liability for infringement or any other claims involving patents, copyrights, or other intellectual property rights of third parties, by or arising from the use of Renesas Electronics products or technical information described in this document, including but not limited to, the product data, drawings, charts, programs, algorithms, and application examples.
3. No license, express, implied or otherwise, is granted hereby under any patents, copyrights or other intellectual property rights of Renesas Electronics or others.
4. You shall not alter, modify, copy, or reverse engineer any Renesas Electronics product, whether in whole or in part. Renesas Electronics disclaims any and all liability for any losses or damages incurred by you or third parties arising from such alteration, modification, copying or reverse engineering.
5. Renesas Electronics products are classified according to the following two quality grades: "Standard" and "High Quality". The intended applications for each Renesas Electronics product depends on the product's quality grade, as indicated below.
   "Standard": Computers; office equipment; communications equipment; test and measurement equipment; audio and visual equipment; home electronic appliances; machine tools; personal electronic equipment; industrial robots; etc.
   "High Quality": Transportation equipment (automobiles, trains, ships, etc.); traffic control (traffic lights); large-scale communication equipment; key financial terminal systems; safety control equipment; etc.
   Unless expressly designated as a high reliability product or a product for harsh environments in a Renesas Electronics data sheet or other Renesas Electronics document, Renesas Electronics products are not intended or authorized for use in products or systems that may pose a direct threat to human life or bodily injury (artificial life support devices or systems; surgical implantations; etc.), or may cause serious property damage (space system; undersea repeaters; nuclear power control systems; aircraft control systems; key plant systems; military equipment; etc.). Renesas Electronics disclaims any and all liability for any damages or losses incurred by you or any third parties arising from the use of any Renesas Electronics product that is inconsistent with any Renesas Electronics data sheet, user's manual or other Renesas Electronics document.
6. When using Renesas Electronics products, refer to the latest product information (data sheets, user's manuals, application notes, "General Notes for Handling and Using Semiconductor Devices" in the reliability handbook, etc.), and ensure that usage conditions are within the ranges specified by Renesas Electronics with respect to maximum ratings, operating power supply voltage range, heat dissipation characteristics, installation, etc. Renesas Electronics disclaims any and all liability for any malfunctions, failure or accident arising out of the use of Renesas Electronics products outside of such specified ranges.
7. Although Renesas Electronics endeavors to improve the quality and reliability of Renesas Electronics products, semiconductor products have specific characteristics, such as the occurrence of failure at a certain rate and malfunctions under certain use conditions. Unless designated as a high reliability product or a product for harsh environments in a Renesas Electronics data sheet or other Renesas Electronics document, Renesas Electronics products are not subject to radiation resistance design. You are responsible for implementing safety measures to guard against the possibility of bodily injury, injury or damage caused by fire, and/or danger to the public in the event of a failure or malfunction of Renesas Electronics products, such as safety design for hardware and software, including but not limited to redundancy, fire control and malfunction prevention, appropriate treatment for aging degradation or any other appropriate measures. Because the evaluation of microcomputer software alone is very difficult and impractical, you are responsible for evaluating the safety of the final products or systems manufactured by you.
8. Please contact a Renesas Electronics sales office for details as to environmental matters such as the environmental compatibility of each Renesas Electronics product. You are responsible for carefully and sufficiently investigating applicable laws and regulations that regulate the inclusion or use of controlled substances, including without limitation, the EU RoHS Directive, and using Renesas Electronics products in compliance with all these applicable laws and regulations. Renesas Electronics disclaims any and all liability for damages or losses occurring as a result of your noncompliance with applicable laws and regulations.
9. Renesas Electronics products and technologies shall not be used for or incorporated into any products or systems whose manufacture, use, or sale is prohibited under any applicable domestic or foreign laws or regulations. You shall comply with any applicable export control laws and regulations promulgated and administered by the governments of any countries asserting jurisdiction over the parties or transactions.
10. It is the responsibility of the buyer or distributor of Renesas Electronics products, or any other party who distributes, disposes of, or otherwise sells or transfers the product to a third party, to notify such third party in advance of the contents and conditions set forth in this document.
11. This document shall not be reprinted, reproduced or duplicated in any form, in whole or in part, without prior written consent of Renesas Electronics.
12. Please contact a Renesas Electronics sales office if you have any questions regarding the information contained in this document or Renesas Electronics products.

(Note1) "Renesas Electronics" as used in this document means Renesas Electronics Corporation and also includes its directly or indirectly controlled subsidiaries.
(Note2) "Renesas Electronics product(s)" means any product developed or manufactured by or for Renesas Electronics.

(Rev.4.0-1 November 2017)

Corporate Headquarters

TOYOSU FORESIA, 3-2-24 Toyosu,
Koto-ku, Tokyo 135-0061, Japan
www.renesas.com

Contact Information

For further information on a product, technology, the most up-to-date version of a document, or your nearest sales office, please visit:
www.renesas.com/contact/

Trademarks

Renesas and the Renesas logo are trademarks of Renesas Electronics Corporation. All trademarks and registered trademarks are the property of their respective owners.

© 2020 Renesas Electronics Corporation. All rights reserved.