LDS6100 Family

PureTouch®* Capacitive Touch Sensor IC Family

FEATURES

- Up to 20 touch sensor channels
  - 2ms update rate per active sensor input**
- Direct Communication Mode (DCM) for mechanical button emulation
- Built-in Slider/Scroll Support
- Configurable hysteresis and debounce
- Touch Preference Modes
- Integrated LED drivers for visual feedback (LDS6120/4/6/8)
  - Configurable dimming
  - Built-in flash and pulsate effects
  - Individual LED configurability
- 1.65-5.5v supply voltage
- Low touch sensor operating power
  - Full power mode (typ): <125uW***
  - Optional low power mode
- On-chip automatic calibration algorithm
- SPI/I^2C/SMBus-compatible serial I/F with VDDIO
- GPIO and interrupt output
- 28 and 40-pin TQFN packages
  - 28-pin and 48-pin SSOP also available

APPLICATIONS

- Mobile handsets, personal media players
- Portable navigation devices
- Remote controls
- Office equipment, multi-function printers
- Set top boxes
- Home appliances
- Brown goods
- Industrial controls

DESCRIPTION

The LDS6100 Family of capacitive touch controllers enables streamlining of the human-machine interface through the implementation of touch-based user inputs such as touch buttons, sliders, and scroll wheels. Employing a finely tuned sigma-delta capacitance-to-digital converter and proprietary noise-filtering algorithms, each device is able to reliably sense small changes in capacitance, allowing touch-based inputs to replace a side variety of mechanical input types. On-chip automatic calibration accounts for environmental changes such as temperature, humidity, and dust and is executed automatically.

The LDS6100 Family consists of eight products, four (LDS6100/4/7/8) focusing exclusively on touch functionality, with another four (LDS6120/4/6/8) include LED drivers for integrated visual feedback when a touch occurs. Up to 20 capacitive sensor input pins may be supported, approximately half of which may be optionally configured as output status pins in Direct Communication Mode (DCM) which allows emulation of mechanical buttons for more seamless integration. On the four LDS6120 offerings, the other half of the sensors not configurable as DCM outputs may be optionally configured as LED drivers, enabling integrated visual feedback for touch applications.

The LDS6100 Family supports a touch sensor supply voltages from 1.65 to 5.5V and a LED driver supply voltage from 3.0V to 5.5V. All support SPI, I^2C, and SMBus-compatible serial interfaces and offer both a General Purpose I/O (GPIO) and VDDIO support, enabling 1.65V to 5.5V voltage interface support. Typical touch sensor operating power for the device is less than 125uW***. Package offerings include thin form factor (0.8mm max, 0.75mm nominal) 4mm x 4mm 28-pin and 5mm x 5mm 40-pin TQFN packages, 10.2mm x 5.3mm 28-pin SSOP package and a 15.7mm x 7.5mm 48-pin SSOP package.

IDT Confidential
Icsourcing @ ins.com
May 26, 2010

* PureTouch is a registred trademark of IDT
** Nominal decimation rate (d=1024), per sensor input
*** 1.8V, excluding VDDIO current, which varies with VDDIO voltage, I/F type, and communication frequency

TYPICAL APPLICATION CIRCUIT FOR DUAL SUPPLY VOLTAGE

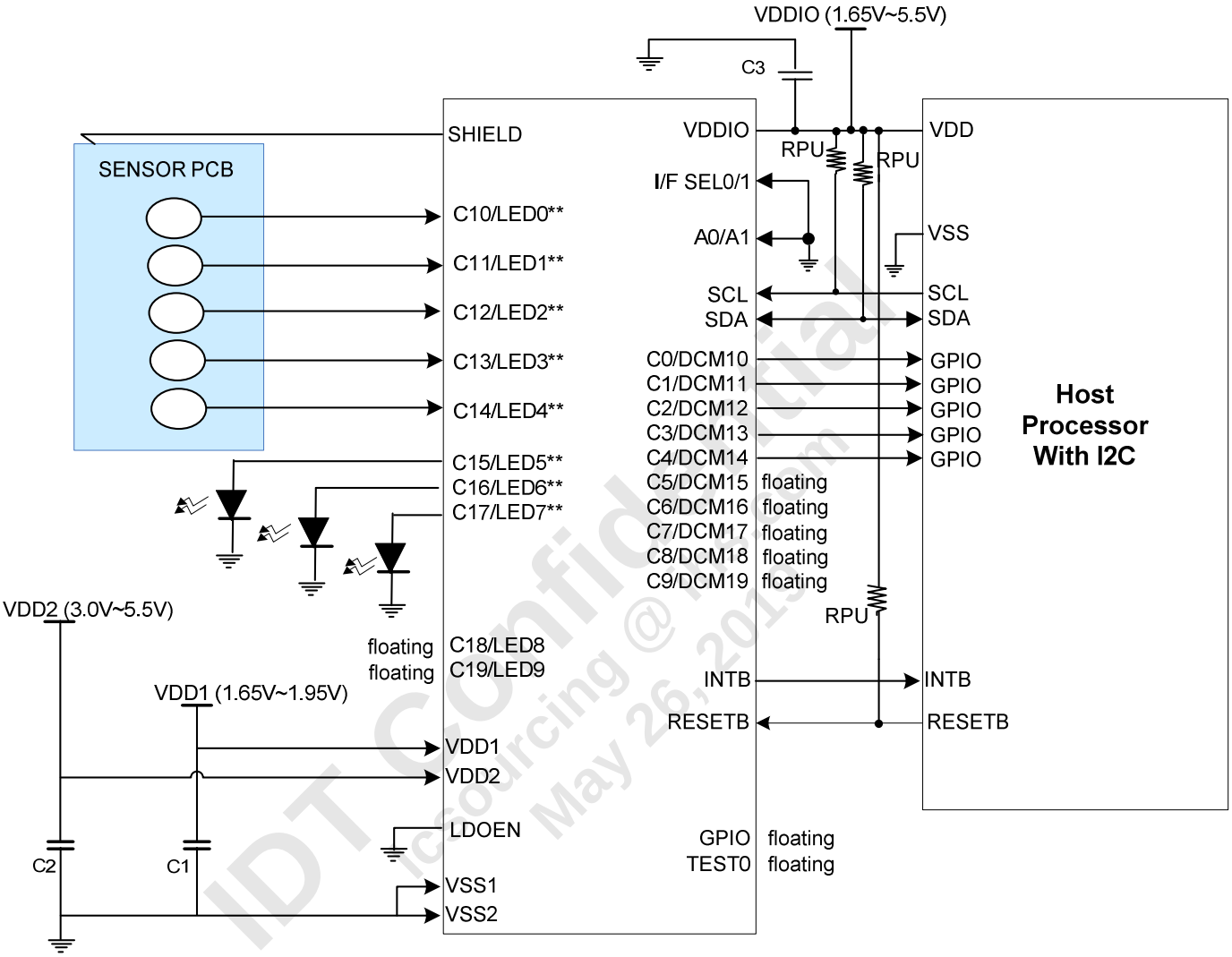

Figure 1: Application Circuit with I²C I/F using dual voltage sources

IDT Confidential
Icsourcing @ May 26, 2013

TYPICAL APPLICATION CIRCUIT FOR SINGLE SUPPLY VOLTAGE

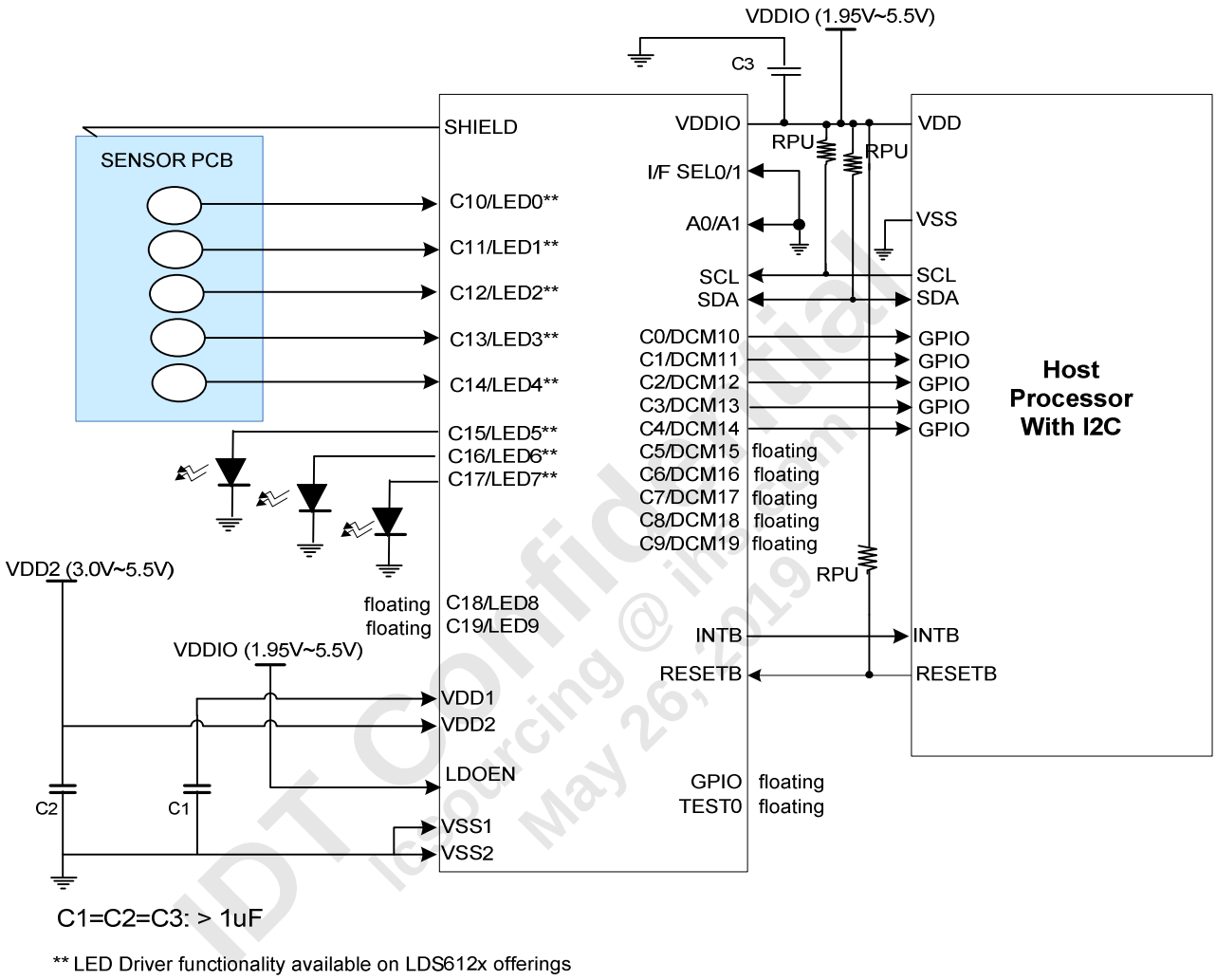

Figure 2: Application Circuit with I²C I/F using single voltage source

IDT Confidential
Iesourcing @ ihs.com
May 26, 2019

ABSOLUTE MAXIMUM RATINGS

Item	Symbol	Rating	Unit
Touch Sensor Supply Voltage	VDD1	-0.3 to +6.0	V
LED Driver Supply Voltage (LDS612x)	VDD2	-0.3 to +6.0	V
Serial Interface Operating Voltage	VDDIO	-0.3 to +6.0	V
Input voltage range (Digital)	VIN	-0.3 to VDDIO +0.3	V
Input voltage range (Analog)	AVIN	-0.3 to VDD1 +0.3	V
Output voltage range (Digital)	VOH	-0.3 to VDDIO +0.3	V
Output voltage range (Analog)	AVOH	-0.3 to VDD1 +0.3	V
Operating Temperature Range	T_{OPR}	-40 to +85	℃
Storage Temperature Range	T_{STG}	-55 to +125	℃

ESD PROTECTION LEVEL

Model	Test condition	Rating	Unit
Human Body Model	C = 100pF, R = 1.5kΩ	8000	V
Charge Device Model	Charging Resistor = 300MΩ	1500	V
Machine Model	C = 200pF, R = 0Ω	400	V

RECOMMENDED OPERATING CONDITIONS

Parameter	Condition	Unit
VDD1*	1.65 to 1.95	V
VDD2 (LDS612x)	3.0 to 5.5	V
VDDIO	1.65 to 5.5	V
Ambient Temperature Range	-40 to +85	℃

* For supply voltages >1.95V, apply to VDDIO pin, set LDOEN to logic high, and tie VDD1 pin to GND through C1
Typical application circuits shown on page 2 and 3

IDT Confidential
Icsourcing @ ihs.com
May 20, 2019

ELECTRICAL OPERATING CHARACTERISTICS

VDD1 = 1.8V, VDD2 = 3.6V (LDS612x only), VDDIO = 1.8V T_{AMB} = -40°C to +85°C unless otherwise specified

Parameter	Symbol	Conditions	Related Pins	Min	Typ	Max	Unit
Power & Operating Voltage		-					
Operating Voltage(1) : Touch*	VDD1	-	VDD1	1.65	1.8	1.95	V
Operating Voltage(2) : LED (LDS612x only)	VDD2	-	VDD2	3.0		5.5	V
Operating Voltage(3) : Touch - I/O	VDDIO	-	VDDIO	1.65	-	5.5	V
Logic Inputs							
High Level Input Voltage	VIH	-	(*1)	0.7*VDDIO			V
Low Level Input Voltage	VIL	-	(*1)	VSS		0.3*VDDIO	V
Input Leakage Current	IIL	VIN= VDDIO or VSS	(*1)	-1			uA
Logic Outputs							
High Level Output Voltage	VOH	IOH= -1mA	(*2)	0.8*VDDIO			V
Low Level Output Voltage	VOL	IOL= +1mA	(*2)			0.2*VDDIO	V
Capacitance-to-Digital Converter							
CDC Update Rate per Active Sensor	Tcdc	(*3)		1.95	2.05	2.15	ms
CIN Input Leakage	IILcin	IOH= -1mA	C0~Cx				nA
Sensor Capacitance	Csensor					50	pF
LED DRIVER (LDS612x only)							
LED Driving Voltage	VDD2			Vf(LED) +1V			V
ILED per I/O pin	ILED		LED0-LEDx			7.75	mA
Driver-to-Driver Current Matching			LED0-LEDx	-10		+10	%

* For supply voltages >1.95V, apply to VDDIO pin, set LDOEN to logic high,and tie VDD1 pin to GND through C1

NOTE: (*1): SCLK/SCL, SDI/A0, CSB/A1, SDA, GPIO, I/F SEL; (*2): SDA, INTB, SDO, GPIO; (*3) DECIMATION RATE = 1024, PER UTILIZED SENSOR

IDT Confidential icsourcing@ics.com May 29, 2019

ELECTRICAL OPERATING CHARACTERISTICS (CURRENT CONSUMPTION)

VDD1 = 1.8V, VDD2 = 3.6V (LDS612x only), VDDIO = 1.8V, T_{AMB} = -40°C to 85°C unless otherwise specified

Parameter	Symbol	Conditions	Related Pins	Min	Typ	Max	Unit
Current Consumption							
Full Power Mode	Iddfp	No LEDs actively driven on LDS612x			65	120	uA
Sleep Mode	Iddsl	No LEDs actively driven on LDS612x			17		uA
Shutdown, T_{AMB} = 25°C	Iddsd	T_{AMB} = 25°C			0.5	5	uA
Shutdown	Iddsd	T_{AMB} = -40°C to +85°C				10	uA

IDT Confidential
Icsourcing @ ins.com
May 26, 2019

SPI-COMPATIBLE TIMING SPECIFICATIONS

For VDD1 = 1.65-1.95V, VDDIO = 1.65V to 5.5V, over ambient temperature range -40ºC to +85ºC. Input signals specified with rise and fall times (tr, tf) of 15ns or less (30% to 70% of VDDIO).

Parameter	Tmin	Tmax	Unit	Description
f_{SCLK}		5	MHz	
t_{CSS}	5		ns	CSB falling edge to first SCLK falling edge
t_{SHW}	20		ns	SCLK high pulse width
t_{SLW}	20		ns	SCLK low pulse width
t_{SDS}	15		ns	SDI setup time
t_{SDH}	15		ns	SDI hold time
t_{ACC}		50	ns	SDO access time after SCLK falling edge
t_{OH}		30	ns	CSB rising edge to SDO high impedence
t_{SCC}	15		ns	SCLK rising edge to CS high

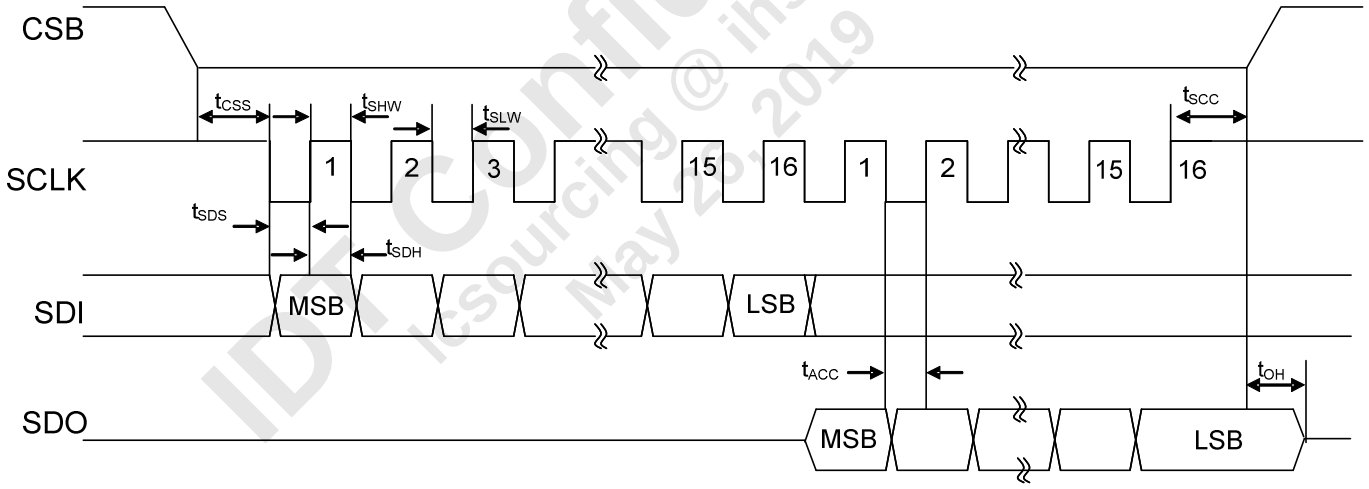

Figure 3: SPI-Compatible Detailed Timing Diagram

IDT Confidential
1c-sourcing @ ins.com
May 29, 2019

WRITING AND READING OVER THE SPI-COMPATIBLE INTERFACE

The SPI interface is based on the Motorola SPI™ standard. The data flow is half duplex. When data is being written to the LDS61xx, the SDO data is invalid (see application note AN61xxAN3). Data is 16 bit and is clocked into the device on the positive edge of SCLK and out of the device on the negative edge of SCLK. SCLK idle is high. Data transactions are initiated when the host takes CSB from the high state to the low state and sends the command word. The command word format is summarized below:

MSB						LSB
15	**14**	**13**	**12**	**11**	**10**	**[9:0]**
CW15	CW14	CW13	CW12	CW11	RW	RA9-RA0
1	1	1	0	0	R/W	Register Address

Bit 10 of the command word designates read-write status **(read=1, write=0)**, and bits [9:0] provide the register address where the data transfer begins. ***Bits [15:11] of the command word must be set to 11100 to begin a bus transaction.*** The 10-bit register address in this datasheet will be designated as 0x000, the hexidecimal representation of the register address.

WRITING DATA OVER SPI

For a write operation, the first 16-bit word is the command word that includes the read-write bit set to "0" and the 10-bit register address. This is followed by the 16-bit data word to be written at the register address, also provided on the SDI line. Figure 3 below illustrates a single write operation.

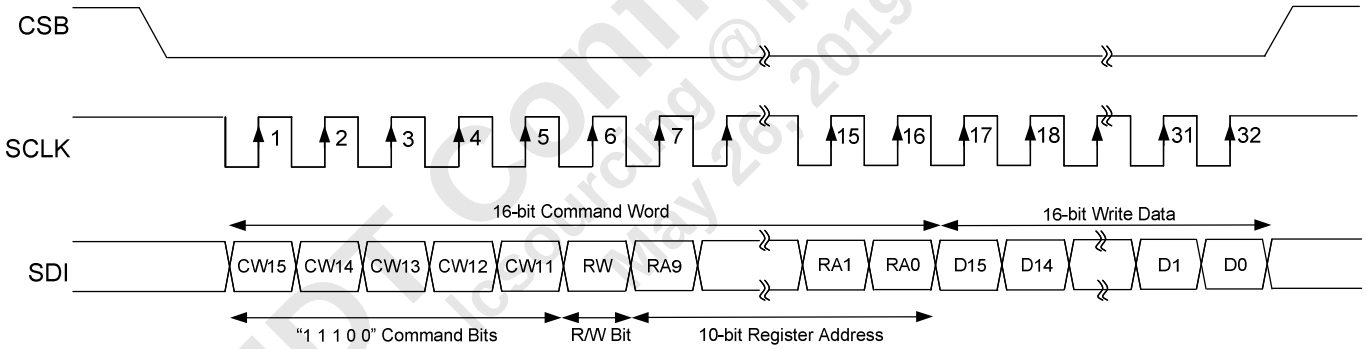

Figure 4: SPI-Compatible Single Register Write

If there is more than one word of data to be clocked in, the LDS6100 Family automatically increments the address and clocks in the next 16-bit data word received on the SDI line into the next register.

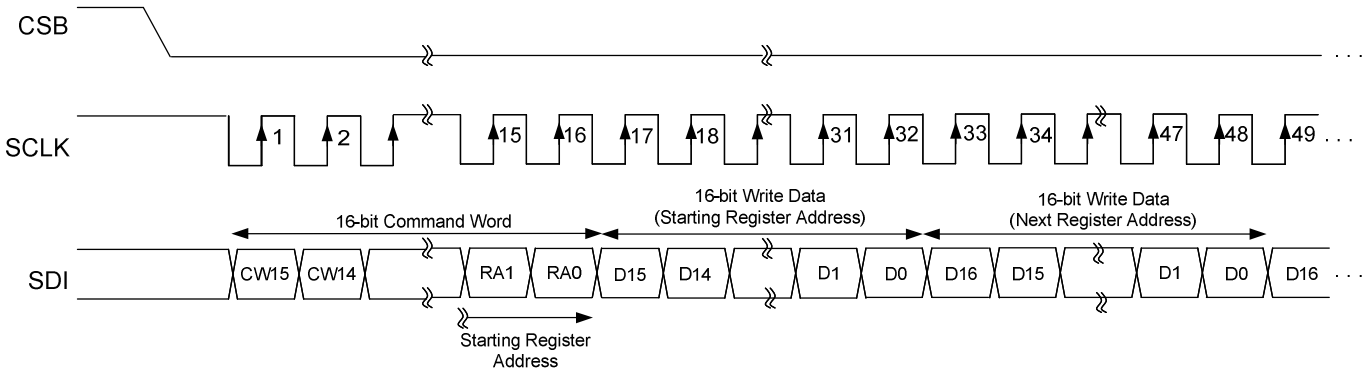

Figure 5: SPI-Compatible Sequential Register Write

IDT Confidential
Icsourcing @ ihs.com
May 26, 2019

READING DATA OVER SPI

For a read operation, the first 16-bit word is the command word that includes the read-write bit set to “1” and the 10-bit register address. The LDS6100 Family then clocks out the 16-bit data word corresponding to the register address on the SDO line. Figure 5 below illustrates a single read operation.

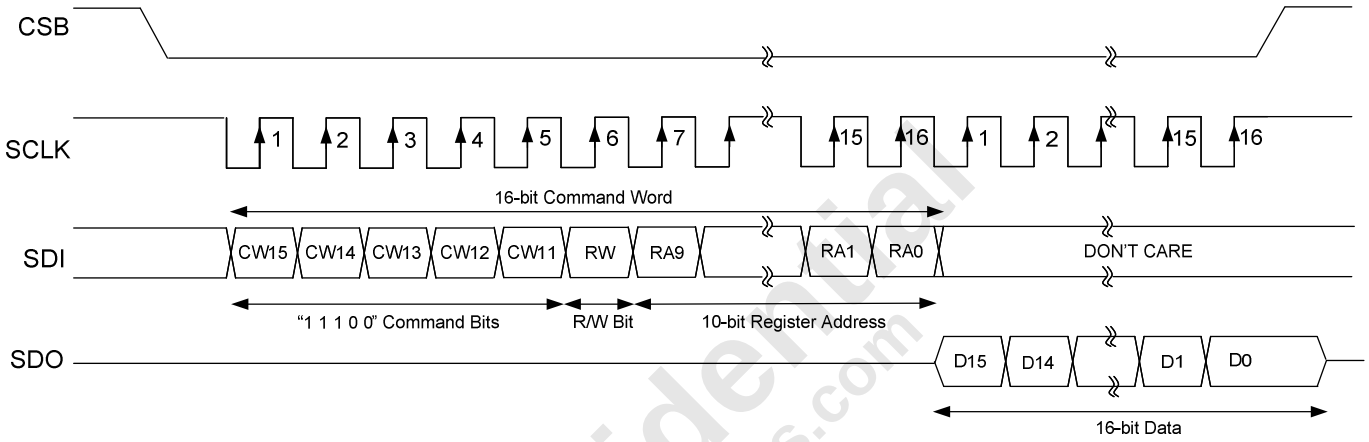

Figure 6: SPI-Compatible Single Register Read

Where multiple register addresses are to be read, a sequential read is possible as the address pointer is automatically incremented. The LDS6100 Family will continue to clock out data on the SDO line as long as the master supplies the clock signal on SCLK as shown in Figure 6 below.

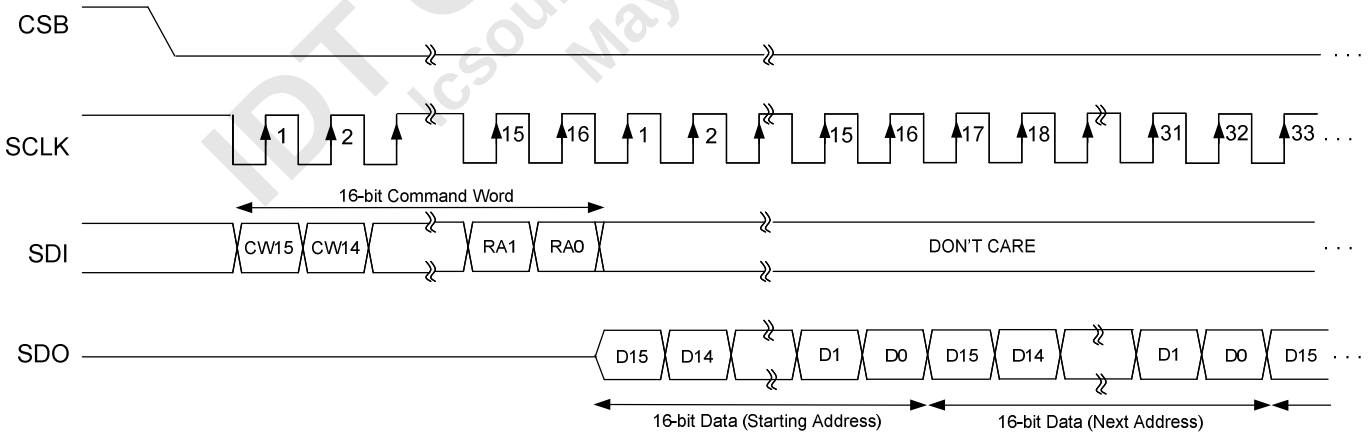

Figure 7: SPI-Compatible Sequential Register Read

The read process is complete when the master takes CSB high. If the address pointer reaches its maximum value, the LDS6100 Family repeatedly clocks out data from the last addressed register. The address pointer will not wrap around.

IDT Confidential
lcsourcing @ ihs.com
May 26, 2019

I²C-COMPATIBLE TIMING SPECIFICATIONS

For VDD1 = 1.65-1.95V, VDDIO = 1.65V to 5.5V, over ambient temperature range -40ºC to +85ºC.

Parameter	Tmin	Tmax	Unit	Description
f_{SCLK}		400	kHz	SCLK clock frequency
t_R		300	ns	Clock/data rise time
t_F		300	ns	Clock/data fall time
$t_{HD:STA}$	0.6		µs	Start condition hold time
t_{SLW}	1.3		µs	Clock low period
t_{SHW}	0.6		µs	Clock high period
$t_{SU:DAT}$	100		ns	Data setup time
$t_{HD:DAT}$	0		ns	Data hold time
$t_{SU:STO}$	0.6		µs	Stop condition setup time
$t_{SU:STA}$	0.6		µs	Start condition setup time
t_{BUF}	1.3		µs	Bus free time between stop and start conditions
t_{SP}		50	ns	Max spike width suppressed by SCLK and SDA inputs
$t_{VD:DAT}$		0.9	µs	Data valid time
$t_{VD:ACK}$		0.9	µs	Data valid acknowledge time

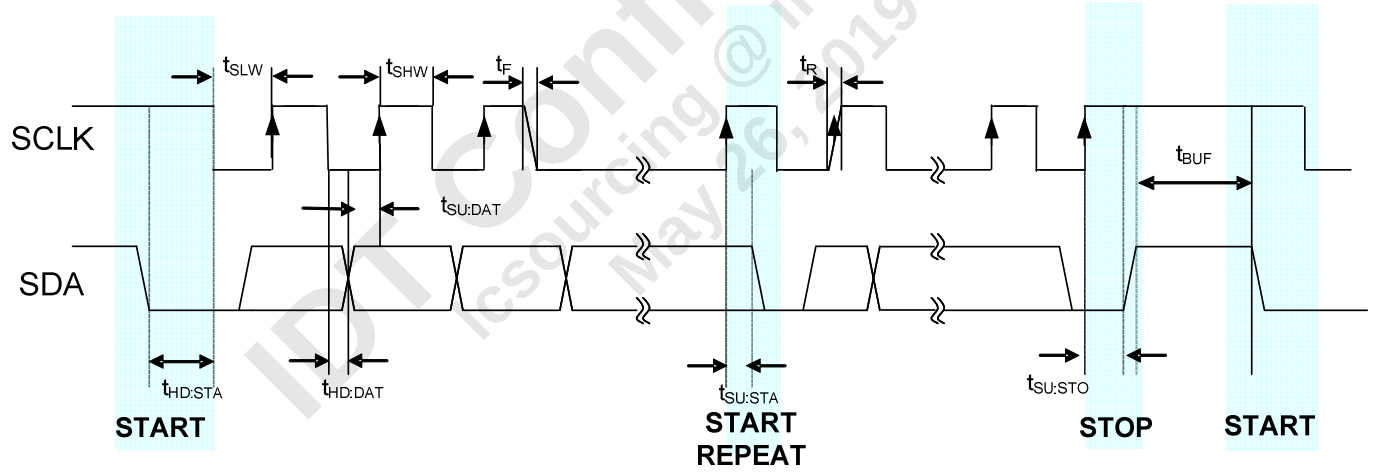

Figure 8: I²C-Compatible Detailed Timing Diagram

IDT Confidential
Icsourcing @ ins.com
May 26, 2019

WRITING AND READING OVER THE I²C-COMPATIBLE INTERFACE

The LDS6100 Family is always a slave on the I²C interface bus and uses the **7-bit device address of 0101 1xx**. The last two bits of the 7-bit address may be assigned to any of the four combinations (00, 01, 10, 11), resulting in four potentially valid devices addresses. Data transfer utilizes 8-bit bytes, with the master initiating a data transfer (START) by taking SDA from high-to-low while keeping SCLK high, followed by the 7-bit device address plus a read/write bit dictating the direction of data transfer **(read=1, write=0)**. Data is sent over a series of 9 clock pulses made up of 8 bits of data and an acknowledge bit from the LDS6100 Family. The STOP condition occurs when SDA is taken from low-to-high while keeping SCLK high, upon which the LDS6100 Family resets its address pointer to 0x000 and the serial interface pins enter the idle state. Data must be transitioned when the clock signal is low and remain stable when SCLK is high, as a low-to-high transition on SDA when SCLK is high would be interpreted as a STOP signal.

WRITING DATA OVER I²C

The device address (0101 100) and read/write bit (0 for writing) are sent over the bus, followed by two data bytes containing the 10-bit register address to be written. The upper and lower register address bits are shown below:

MSB							LSB
7	6	5	4	3	2	1	0
X	X	X	X	X	X	Register Addr Bit 9	Register Addr Bit 8

MSB							LSB
7	6	5	4	3	2	1	0
Register Addr Bit 7	Register Addr Bit 6	Register Addr Bit 5	Register Addr Bit 4	Register Addr Bit 3	Register Addr Bit 2	Register Addr Bit 1	Register Addr Bit 0

The third and fourth data bytes contain the 8 MSBs and LSBs, respectively, to be written to the internal register pointed to by the 10-bit register address.

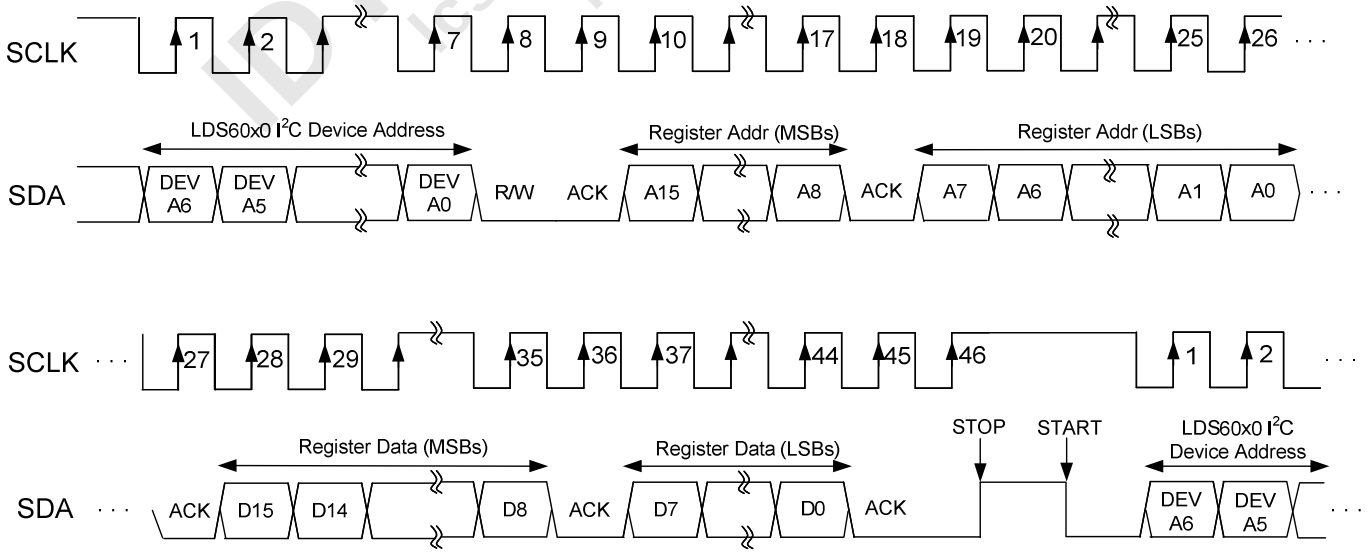

Figure 9: I²C-Compatible Register Write

The LDS6100 Family automatically increments the address pointer enabling sequential writes to registers in the same write transaction. Finishing the transaction involves the master generating a stop condition on SDO or repeat start condition if the I²C link is to remain active.

IDT Confidential
lcsourcing@ins.com
May 28, 2019

READING DATA OVER I2C

To initiate a read operation, the master must first write the read starting address to the LDS6100 Family. The device address (0101 100) and read/write bit (0 for initial write of starting address) is sent over the bus, followed by two data bytes that contain the 10-bit register address to be read. The address format is identical to that used during write operations, with only the 10 lower bits of the 16-bit address word containing address information.

The master then either ends the write operation with a STOP signal followed by initiation (START) of a read operation, or more ideally, issues a "REPEAT START" command. In both cases, the read/write bit is set to "1" (see Figure 9 for details of both continuations methods). In either case, the LDS6100 Family provides the MSB eight bits of data first, followed by the LSB eight bits in the next byte.

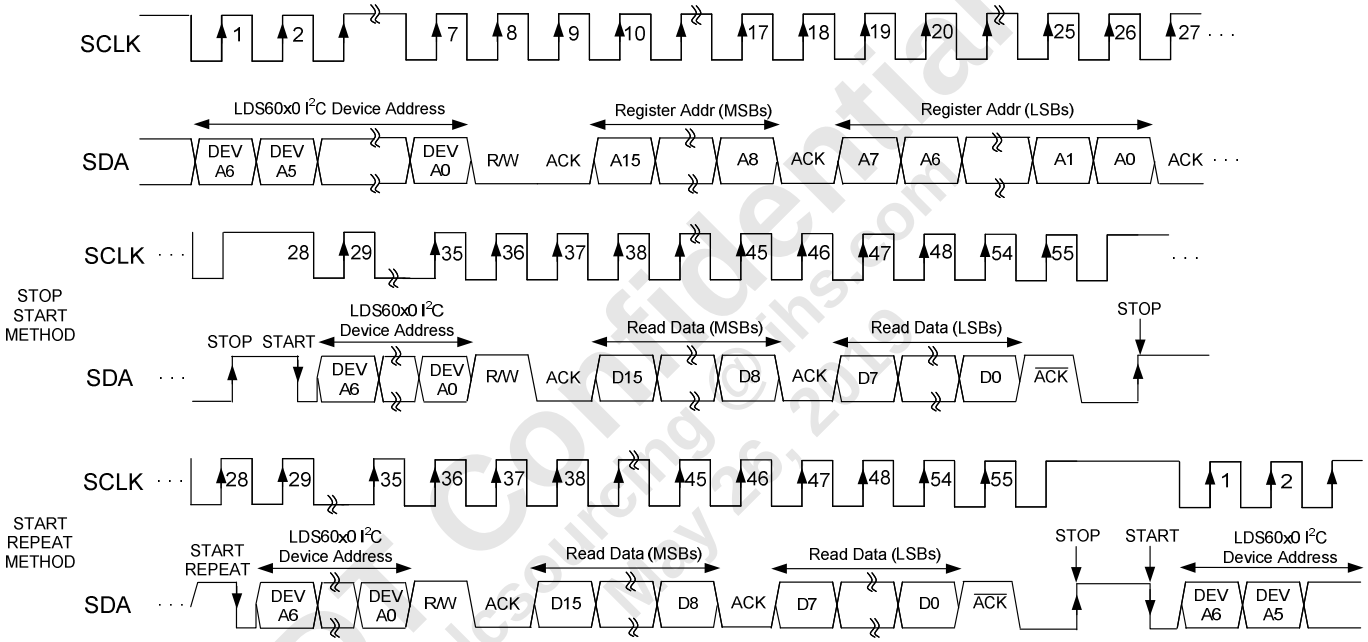

Figure 10: I²C-Compatible Detailed Timing Diagram

The LDS6100 Family address pointer automatically increments after each read, resulting in a continuous output of read data until the master returns a no acknowledge (ACK signal high) and stop condition to the bus. If the address pointer reaches its maximum value and the master continues to attempt to read from the part, the LDS6100 Family continues to send data from the last register that was addressed.

IDT Confidential
Icsourcing @ ihs.com
May 26, 2013

SMBUS-COMPATIBLE TIMING SPECIFICATIONS

Coming in future datasheet revision

IDT Confidential
Icsourcing @ ihs.com
May 26, 2019

DIRECT COMMUNICATION MODE (DCM) INTERFACE OPTION

The Direct Communication Mode or “DCM” interface option enables emulation of mechanical buttons by assigning an output status or “DCM” pin for up to 10 of the touch sensor channels. The number of possible DCM pins varies by device (see Product Family Guide on page 14) and is equal to approximately half the number of sensor channels for most products. The LDS6100 application diagram below illustrates a case where 10 of the 20 channels are assigned as touch sensors and the other 10 as corresponding DCM output channels.

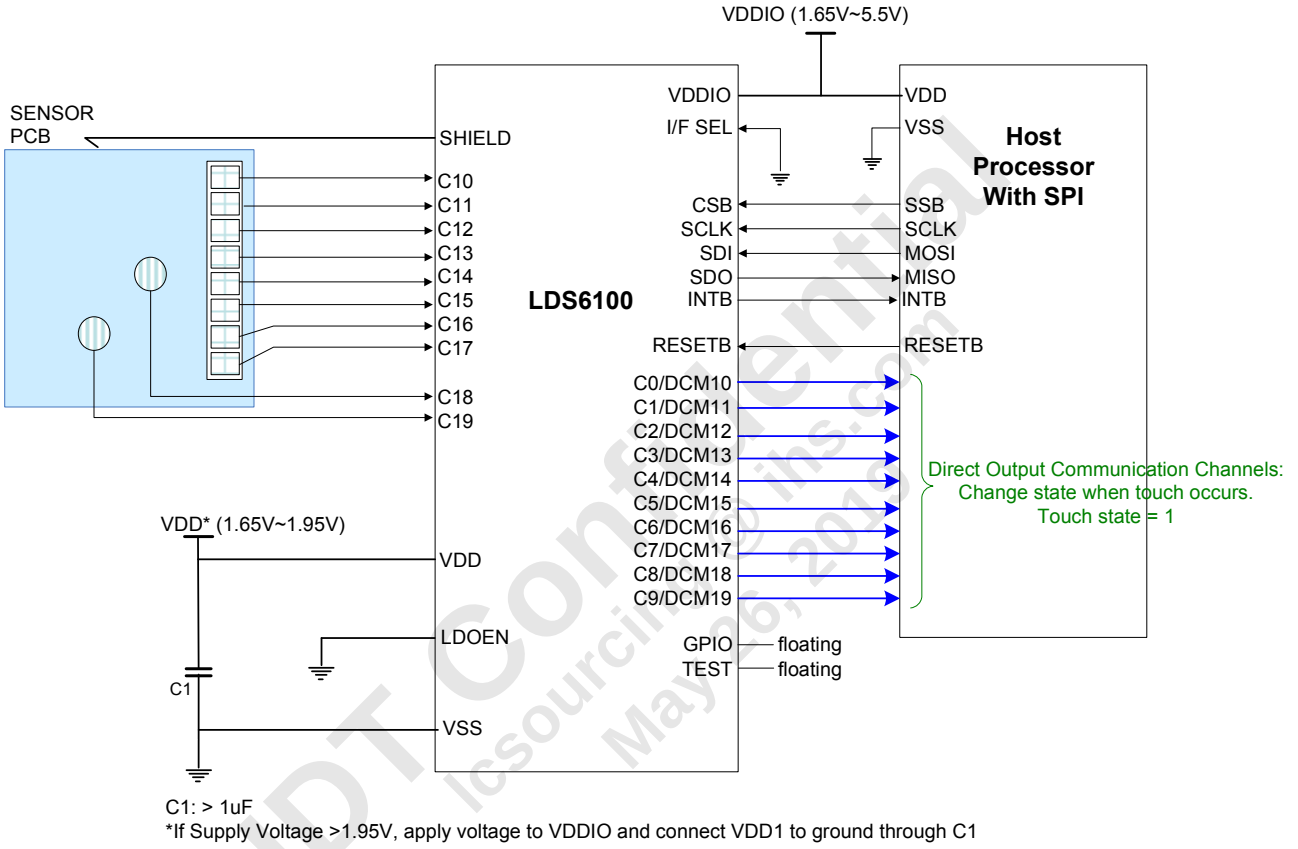

IDT Confidential
Icsource@ihs.com
May 26, 2010

The specific assignment of a touch sensor channel as a DCM output is done with the DCM Configuration register (0x00A). The table below shows an example for the LDS6100 device in which five of the ten dual-purpose sensor/DCM channels are assigned as DCM outputs (C1/DCM11, C2/DCM12, C4/DCM14, C7/DCM17, C9/DCM19).

C0-C9 Input Configuration Registers

	C9 DCM19	C8 DCM18	C7 DCM17	C6 DCM16	C5 DCM15	C4 DCM14	C3 DCM13	C2 DCM12	C1 DCM11	C0 DCM10
C0-C9 Sensor Config	0	1	0	1	1	0	1	0	0	1
DCM Config	1	0	1	0	0	1	0	1	1	0
Result	DCM	Sensor	DCM	Sensor	Sensor	DCM	Sensor	DCM	DCM	Sensor

- Assigned As Sensor Input
- Assigned as DCM Output

Because the mapping of DCM to touch channel is fixed, the touch channel corresponding to the activated DCM output should be similarly configured as a touch sensor channel (C11, C12, C14, C17, and C19 in the above example).

PRODUCT FAMILY GUIDE

The LDS6100 Family consists of eight products organized into two categories of products. The LDS610x offerings focus on touch functionality alone, while the LDS612x products also integrate the option to configure approximately half of the touch sensor channels as LED drivers to enable automatic visual feedback associated with touch events.

The number of touch sensor channels (each channel supports a single button or slider/scroll element), DCM outputs (to be explained further in the Direct Communication Mode section of the datasheet) and LED drivers (for LDS612x products) provided with each product is presented in the table below.

Part#	Touch Sensors	DCM Outputs	LED Driver	Package
LDS6104	Up to 8	Up to 4		28ld TQFN 28ld SSOP
LDS6107	Up to 13	Up to 5		
LDS6108	Up to 16	Up to 8		40ld TQFN 48ld SSOP
LDS6100	Up to 20	Up to 10		
LDS6124	Up to 8	Up to 4	Up to 4	28ld TQFN 28ld SSOP
LDS6126	Up to 11	Up to 5	Up to 6	
LDS6128	Up to 16	Up to 8	Up to 8	40ld TQFN 48ld SSOP
LDS6120	Up to 20	Up to 10	Up to 10	

IDT Confidential
Icsourcing@ihs.com
May 26, 2019

DEVICE PINOUTS (QFN)

LDS6100

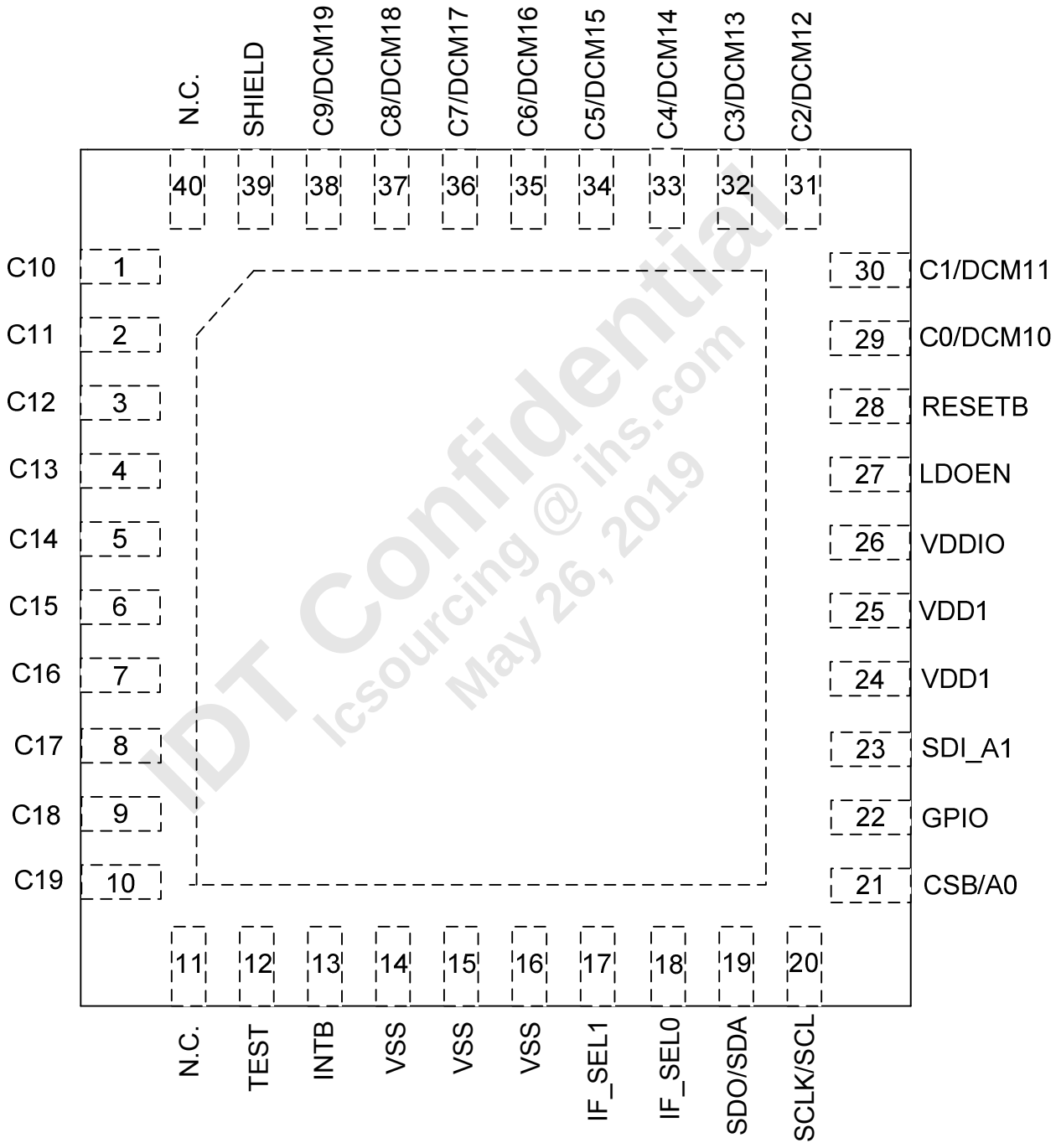

IDT Confidential
Icsourcing @ ihs.com
May 26, 2019

LDS6104

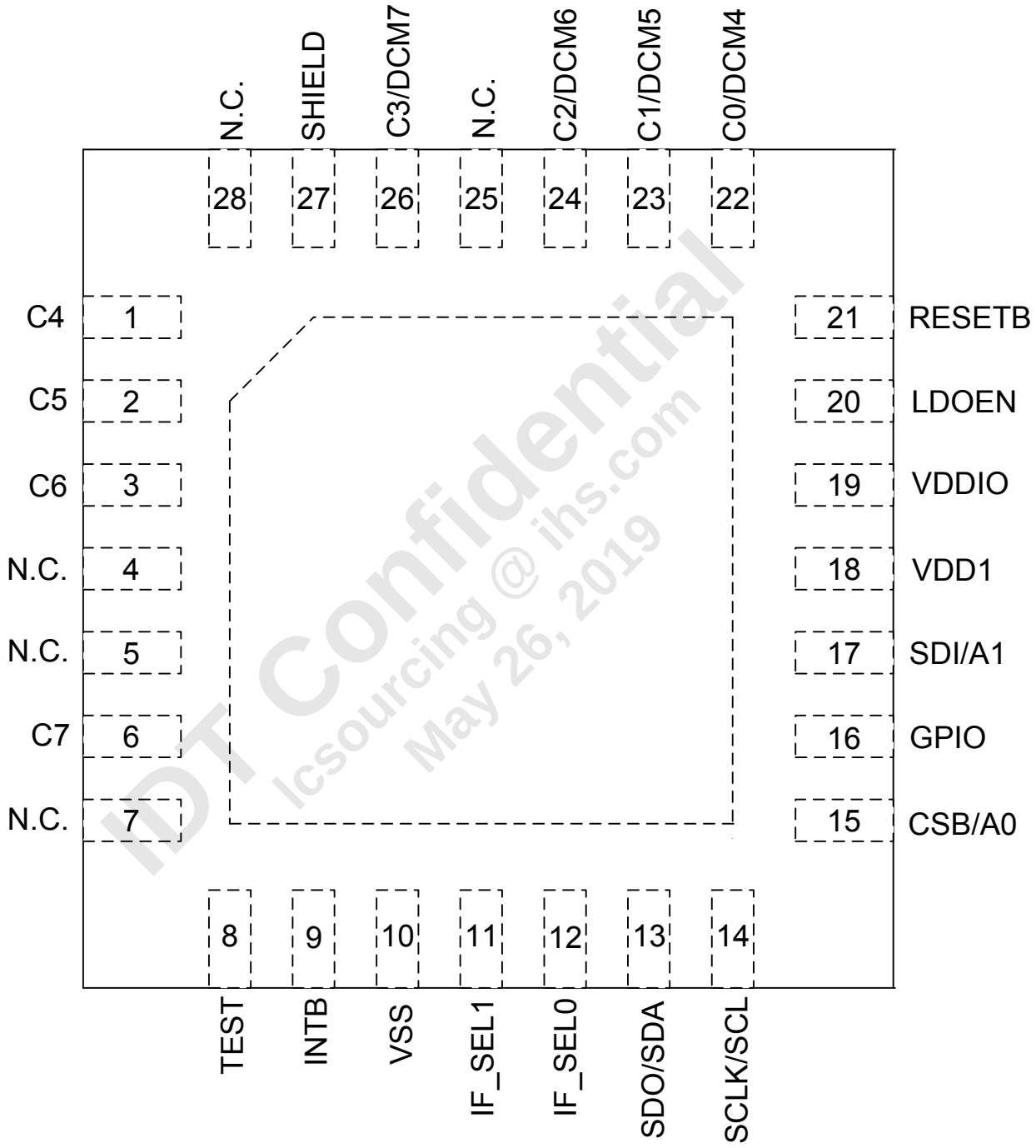

IDT Confidential
Icsourcing @ ihs.com
May 26, 2019

LDS6107

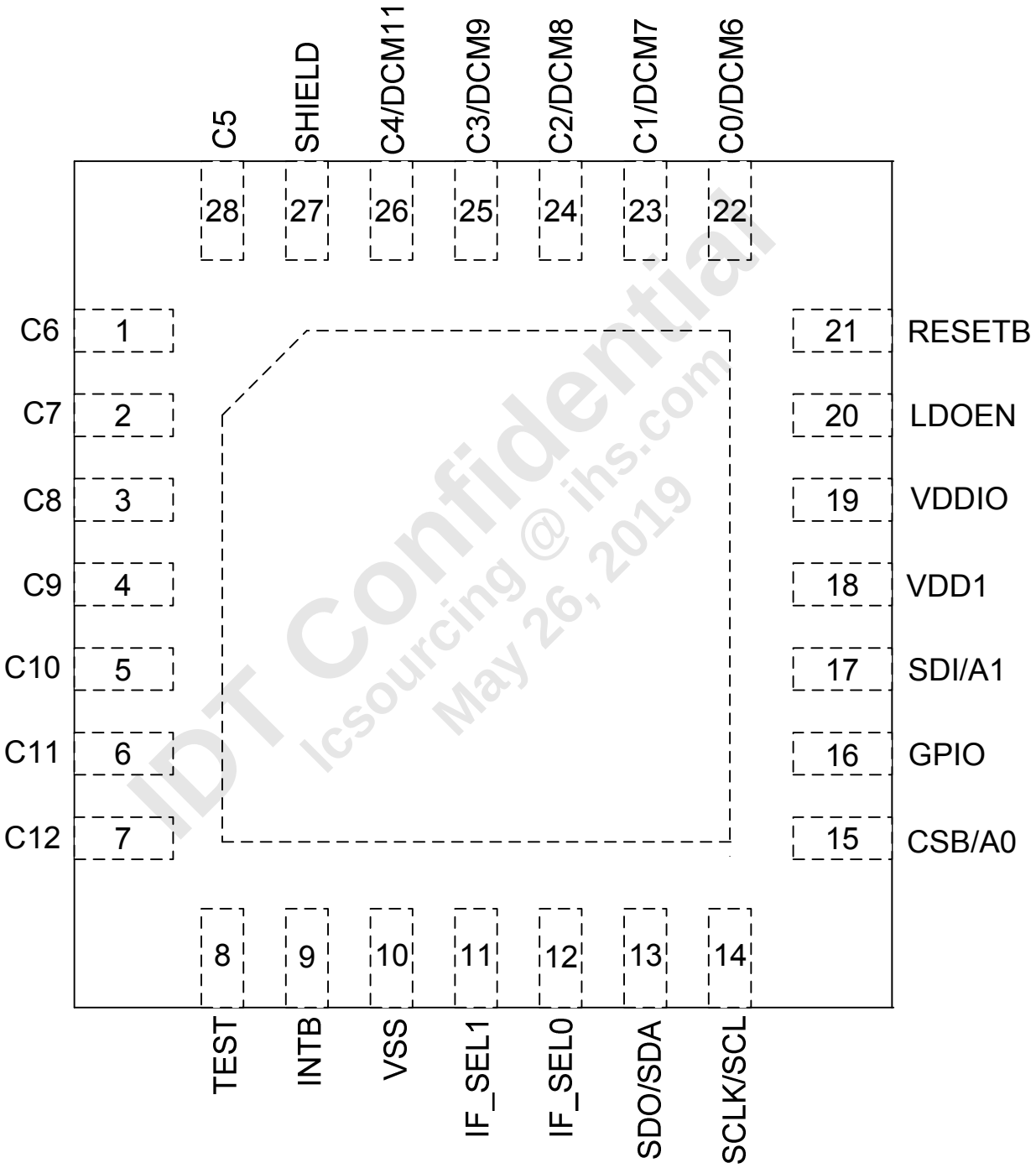

IDT Confidential
Icsourcing @ ihs.com
May 26, 2019

LDS6108

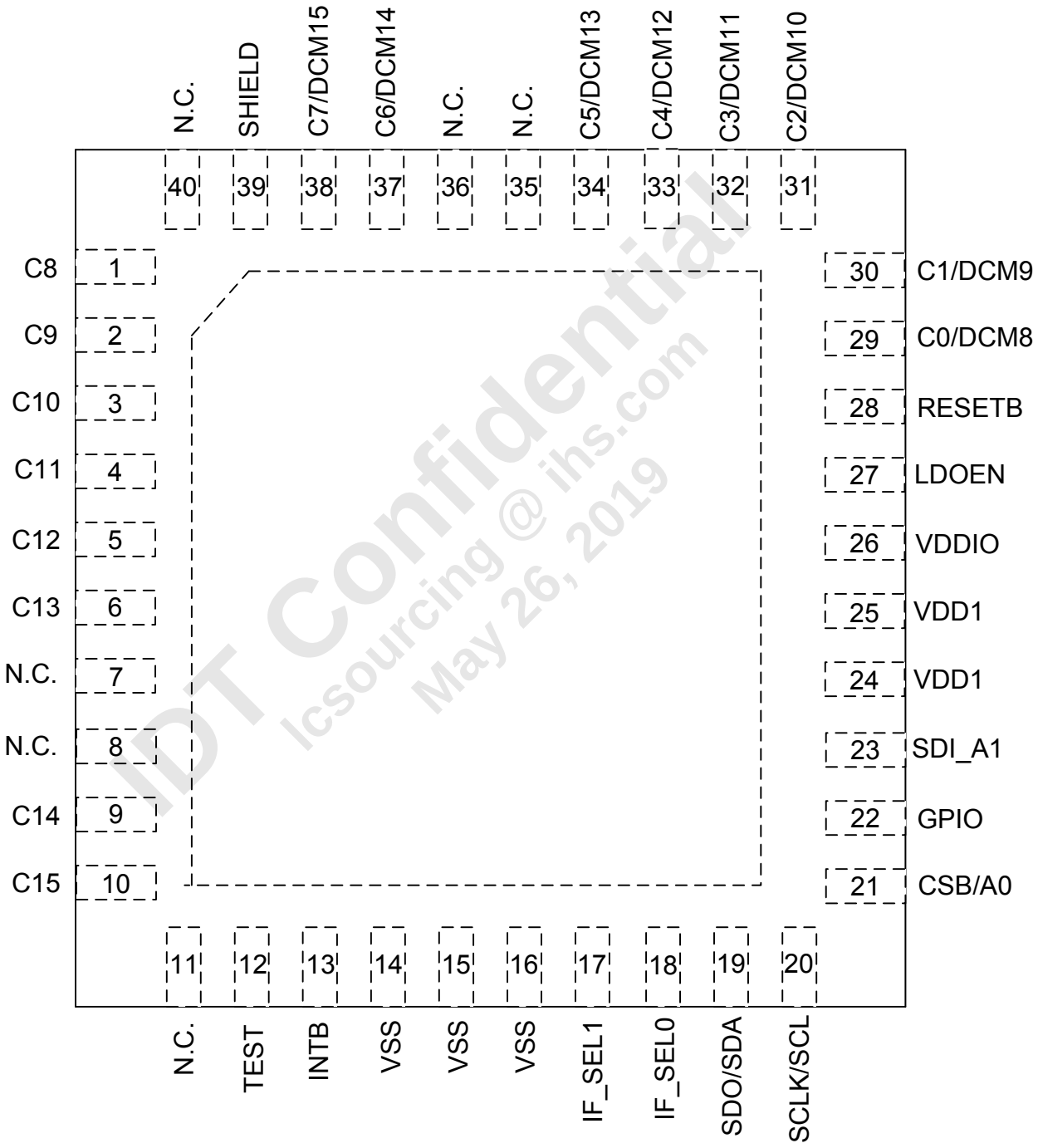

IDT Confidential
Icsourcing @ ihs.com
May 26, 2019

LDS6120

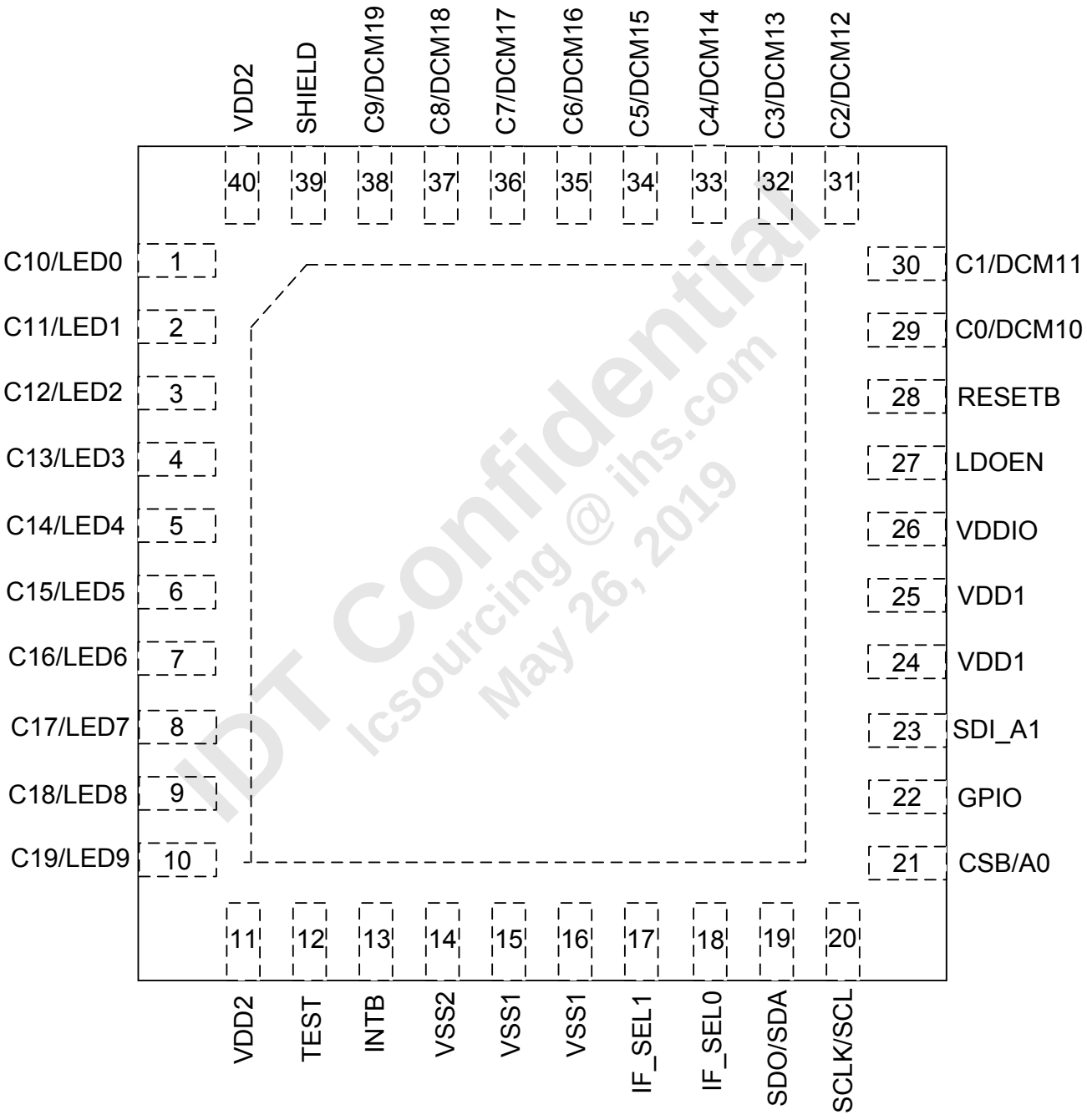

IDT Confidential
Icsourcing @ ins.com
May 26, 2019

Note: Please short pin 24 and 25 and connect to VDD1

LDS6124

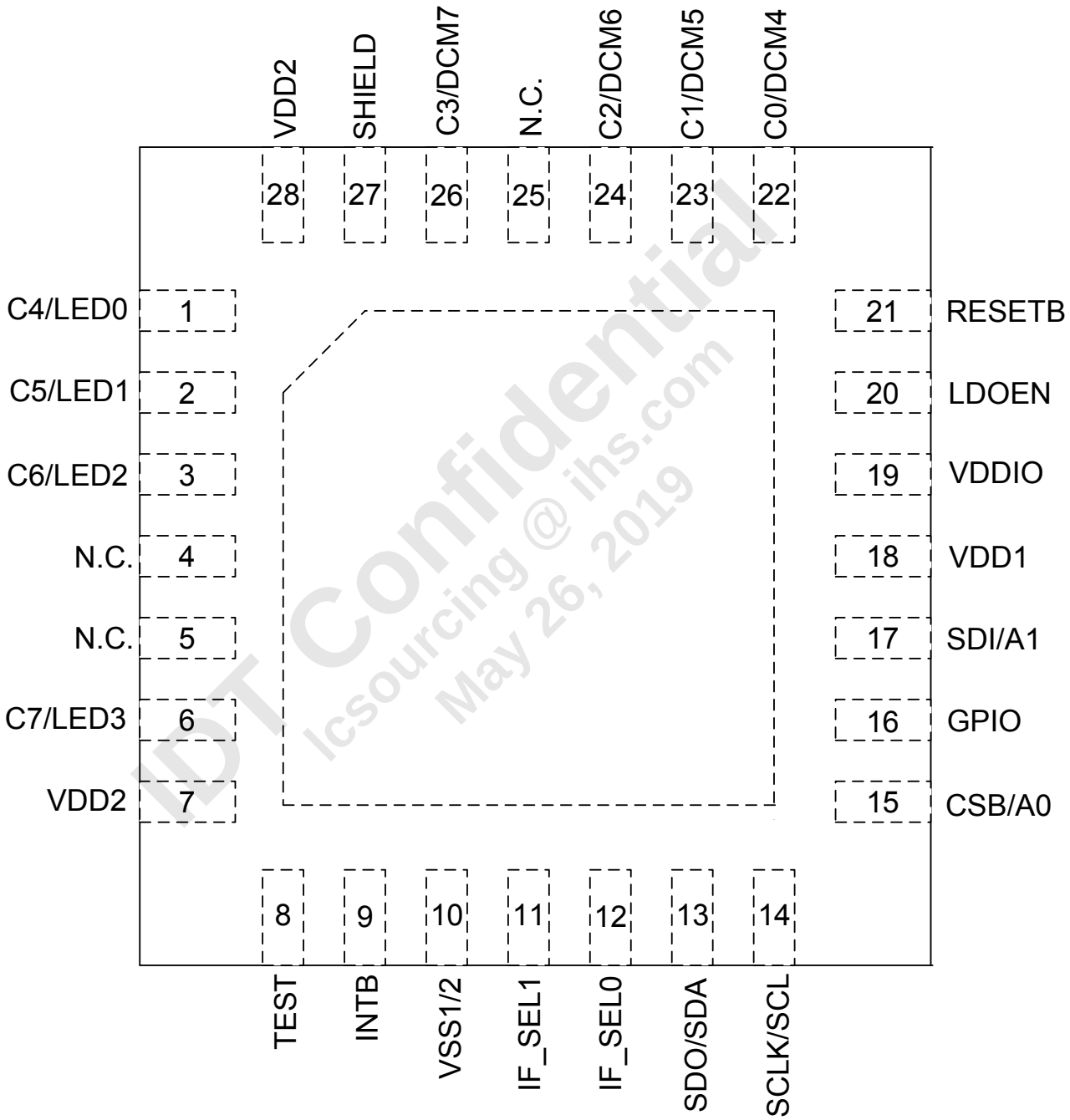

IDT Confidential
Icsourcing @ ins.com
May 26, 2019

LDS6126

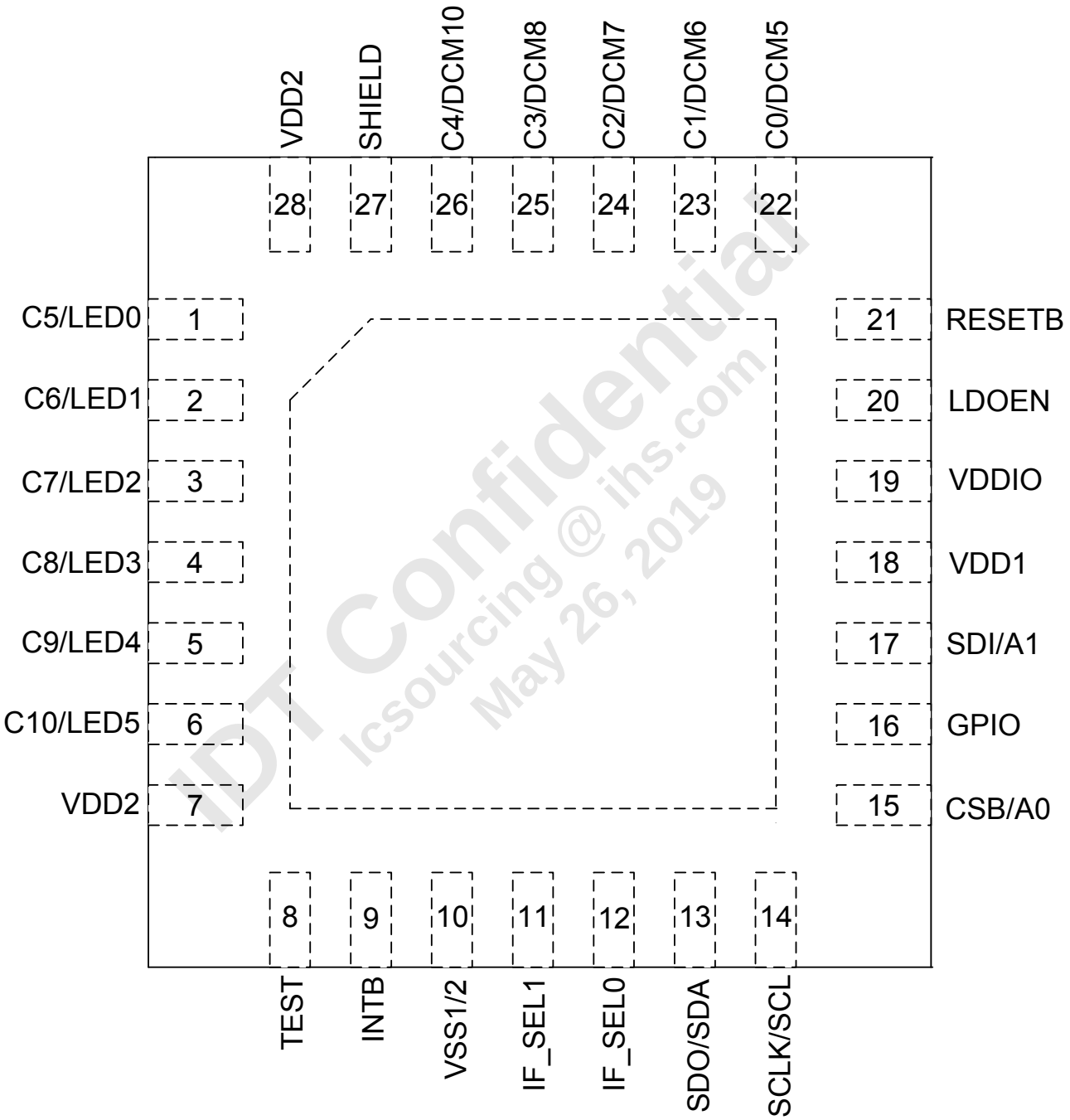

IDT Confidential
Icsourcing @ ihs.com
May 26, 2019

LDS6128

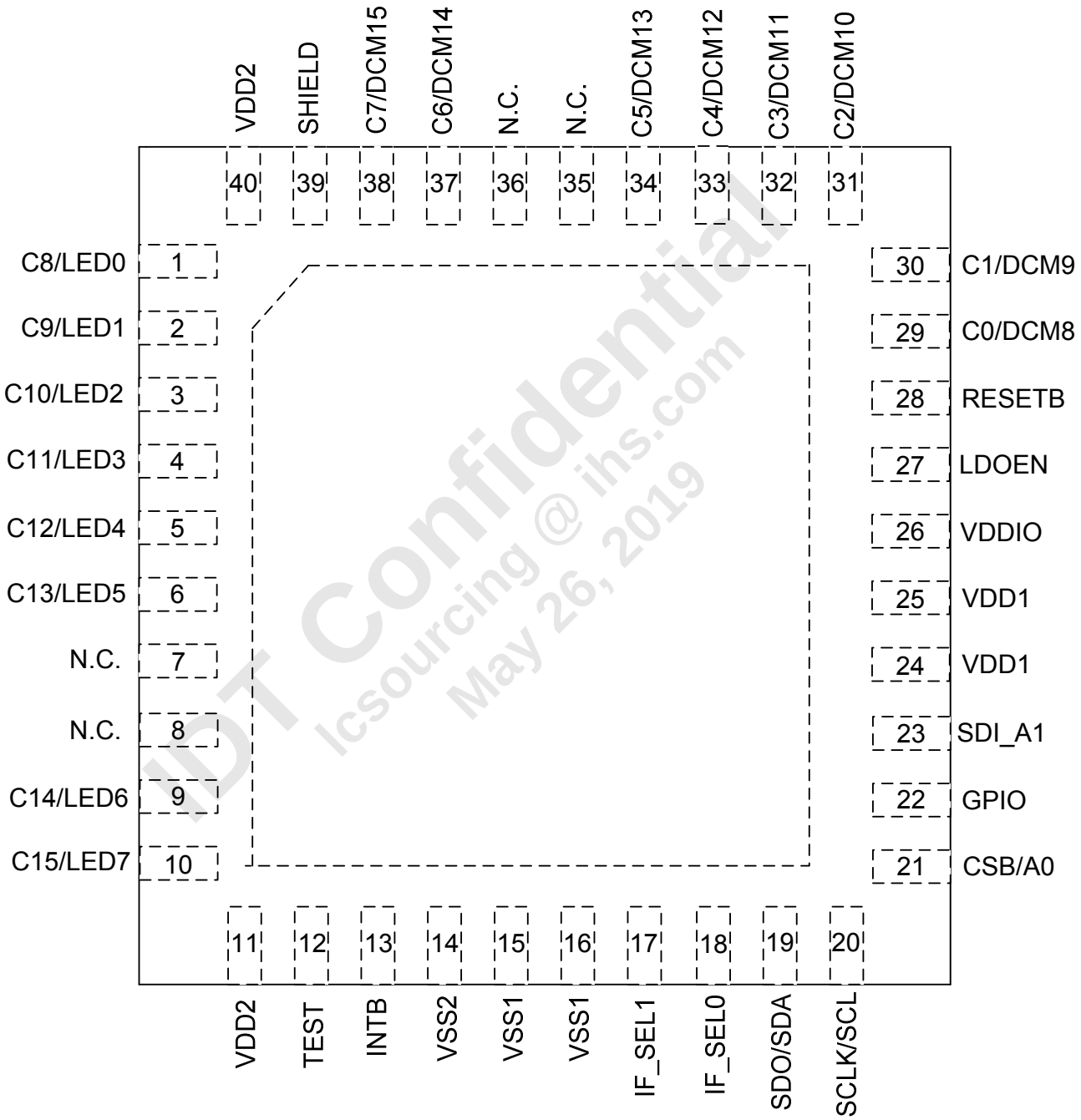

IDT confidential
Icsourcing @ ihs.com
May 26, 2019

DEVICE PINOUTS (SSOP)

LDS6104 – 28 pin SSOP

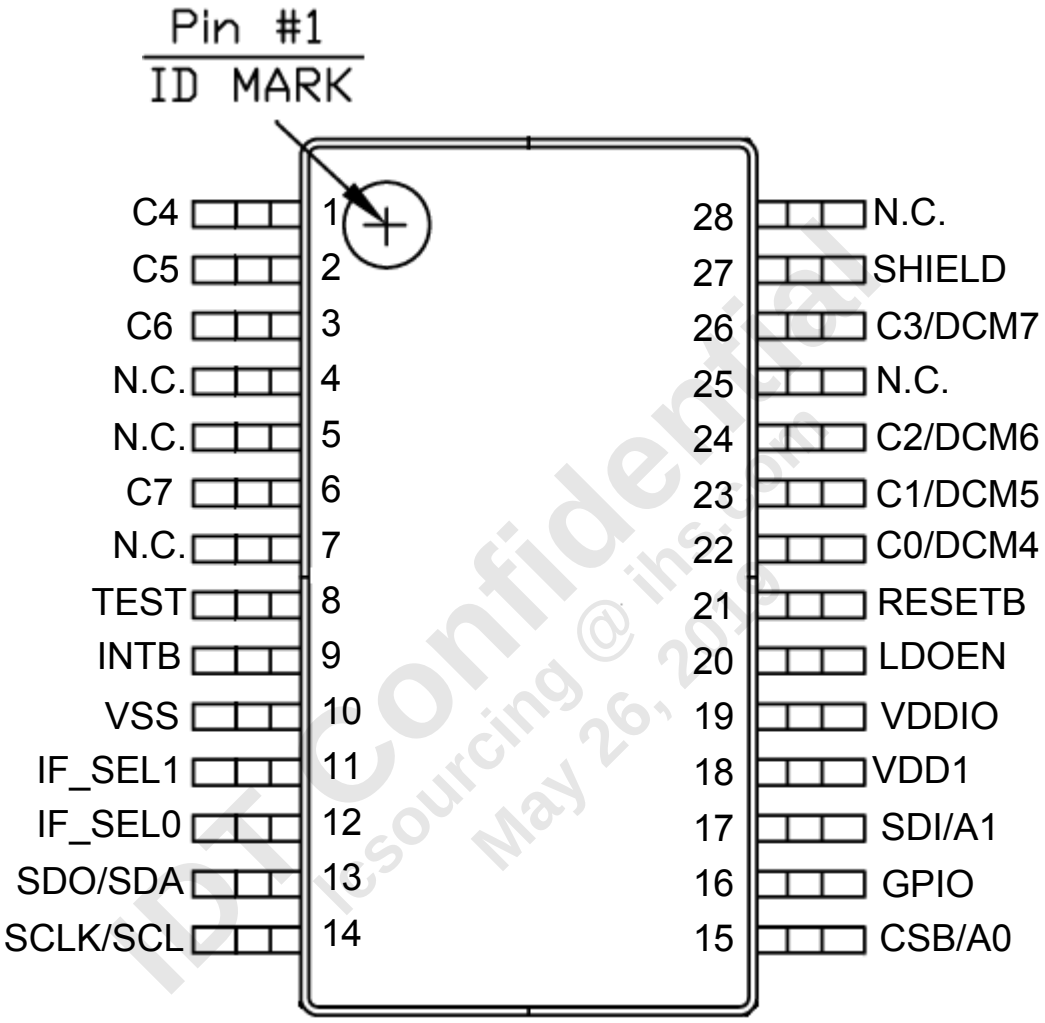

IDT Confidential
Resourcing @ ins.com
May 26, 2015

LDS6107 – 28 pin SSOP

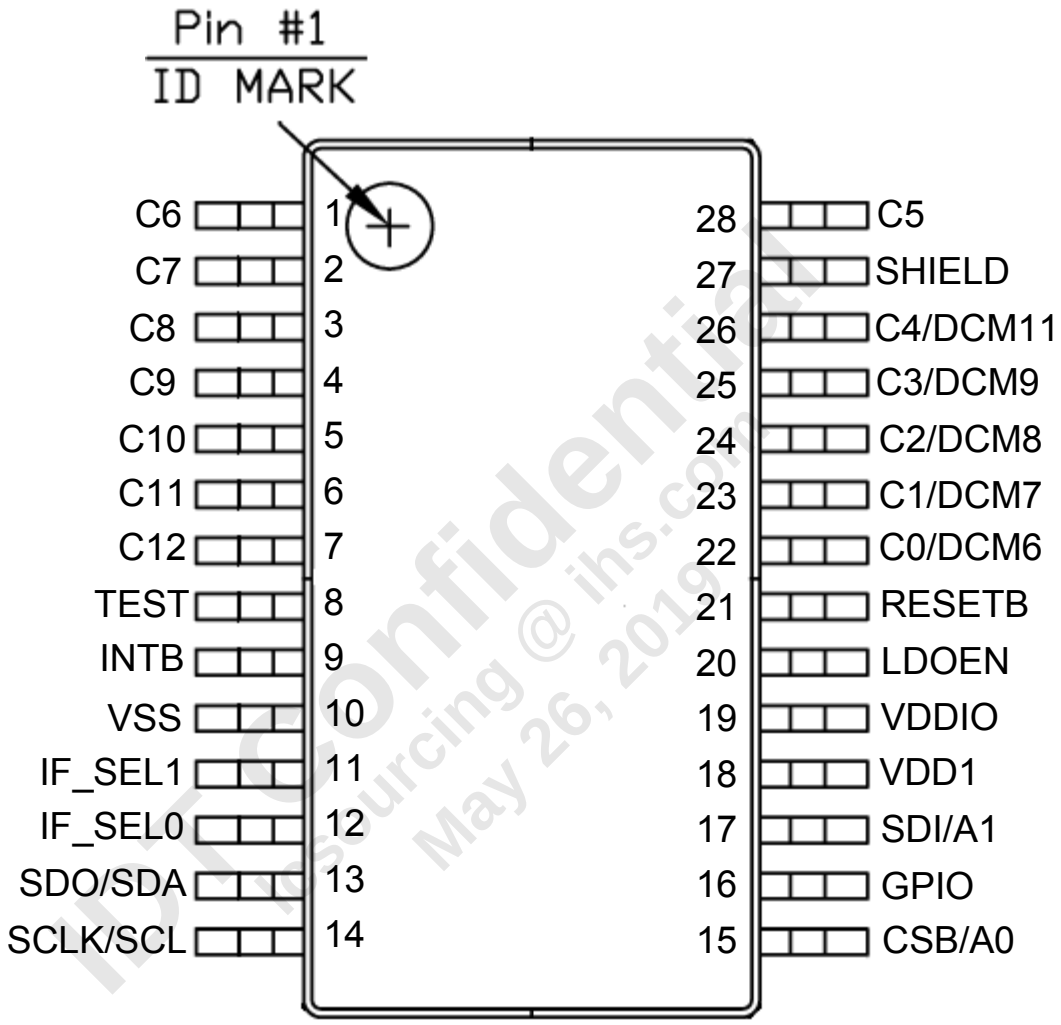

IDT Confidential
Insourcing @ ins.com
May 26, 2019

LDS6124 – 28 pin SSOP

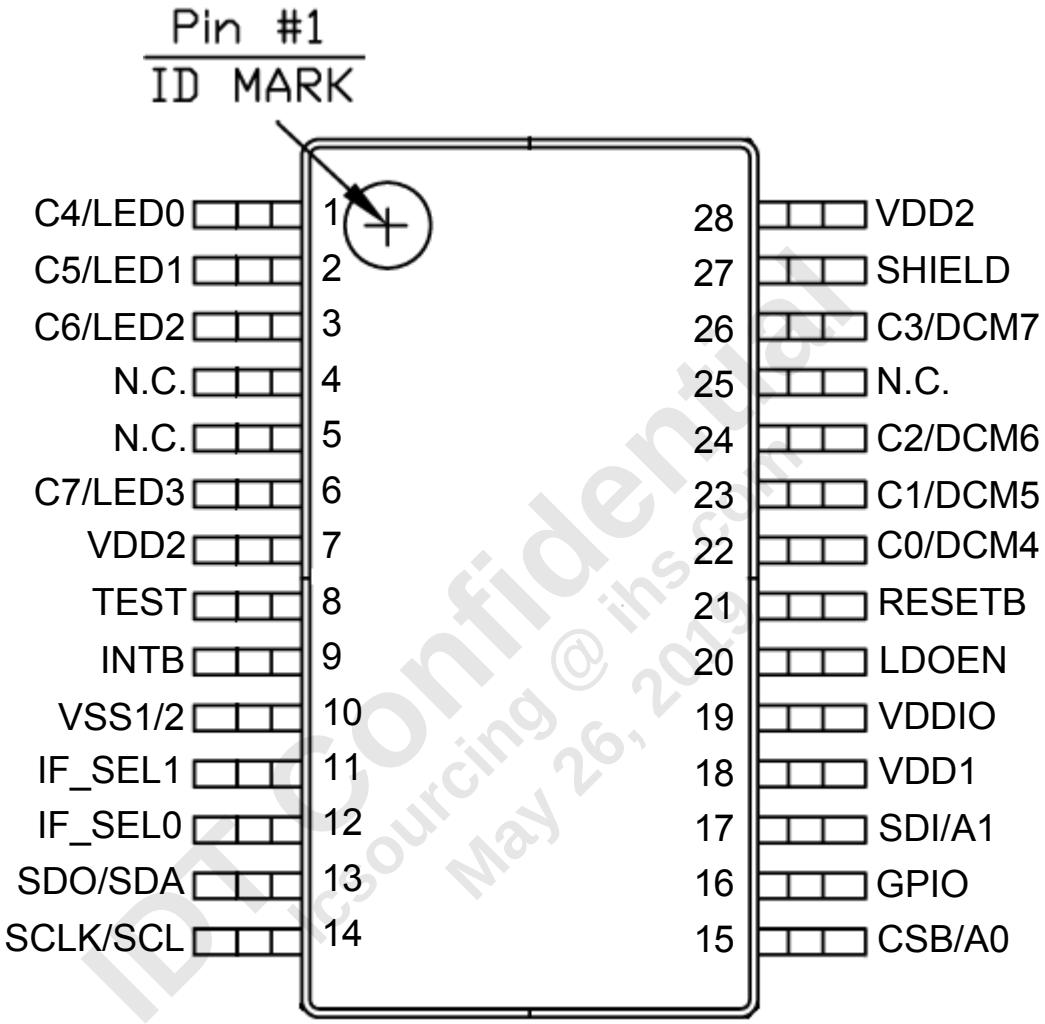

IDT Confidential
Icsourcing @ ins.com
May 26, 2015

LDS6126 – 28 pin SSOP

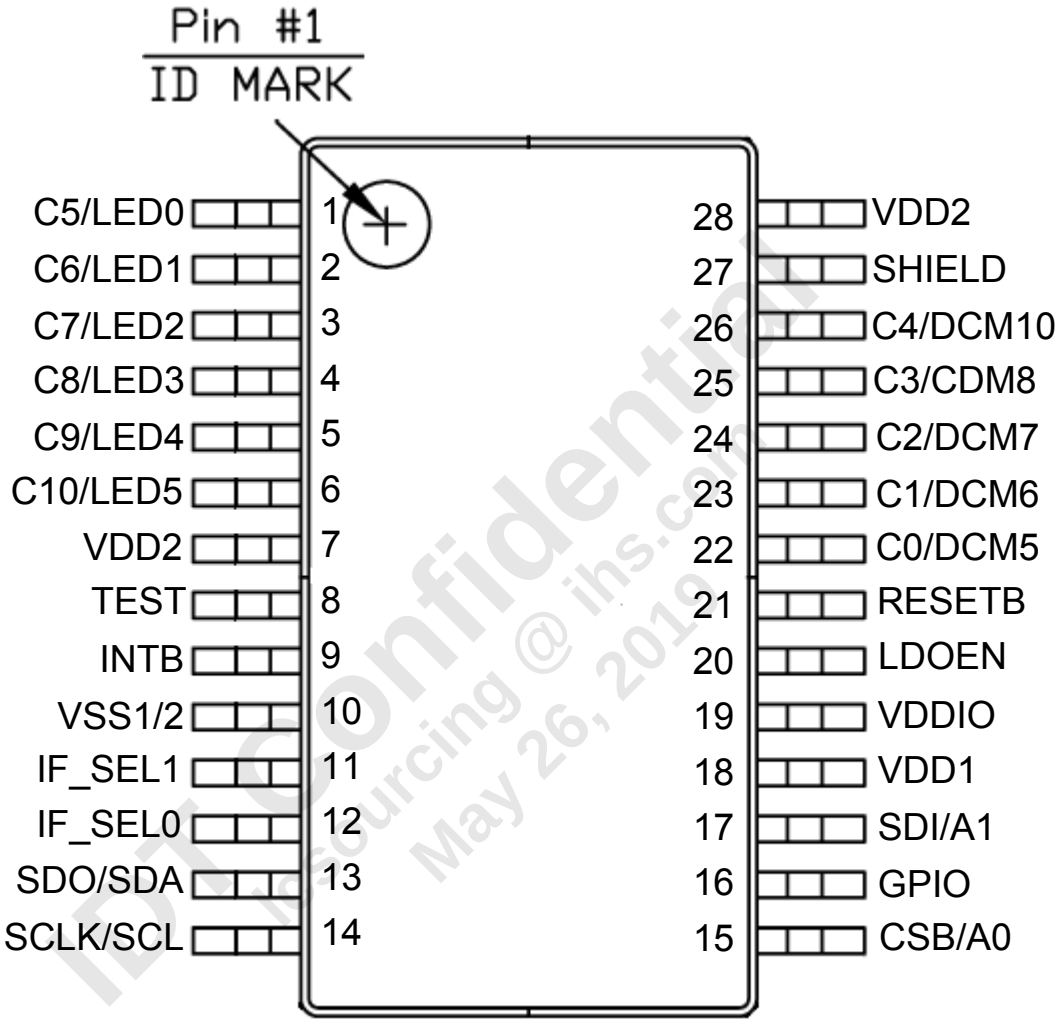

IDT Confidential
Resourcing @ ins.com
May 26, 2012

LDS6100 – 48 pin SSOP

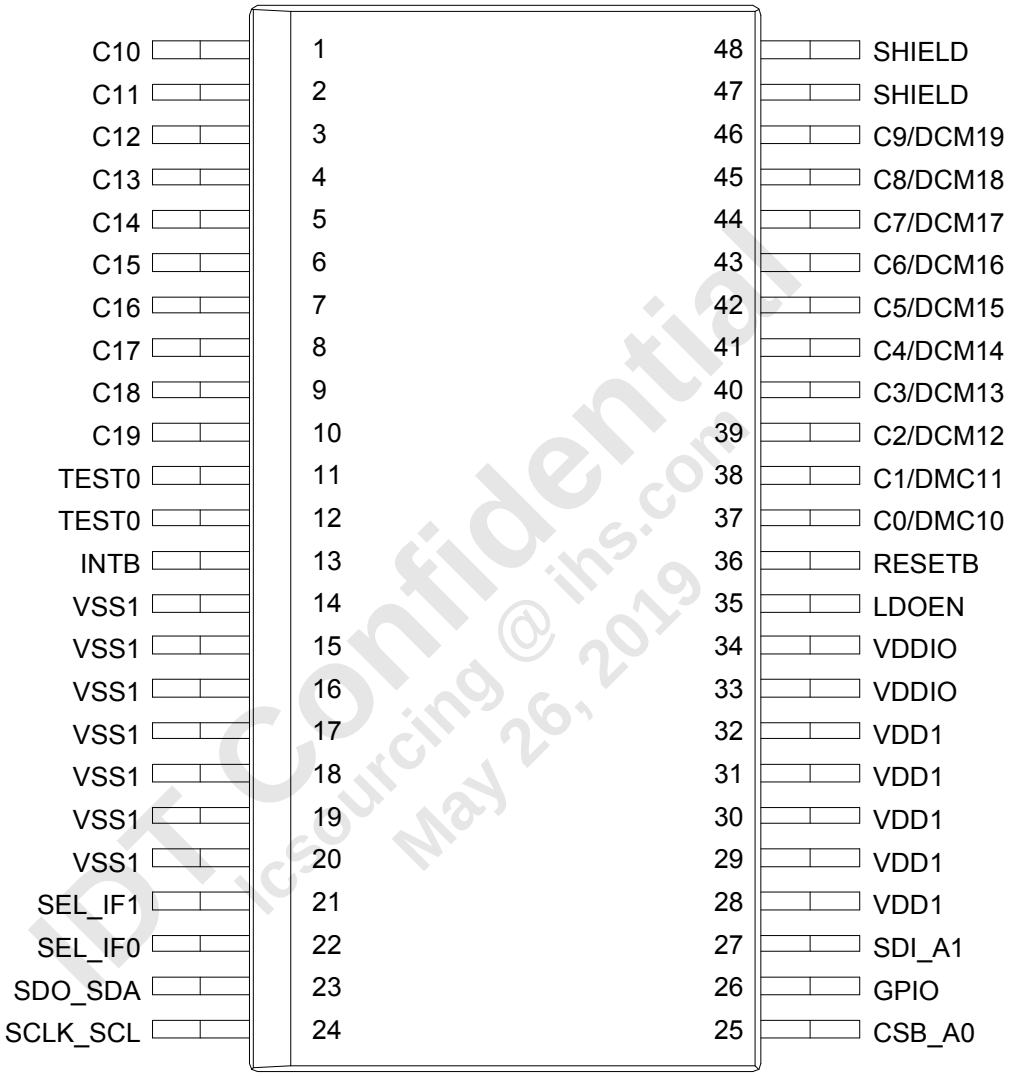

IDT Confidential
icsourcing @ ins.com
May 26, 2019

LDS6108 – 48 pin SSOP

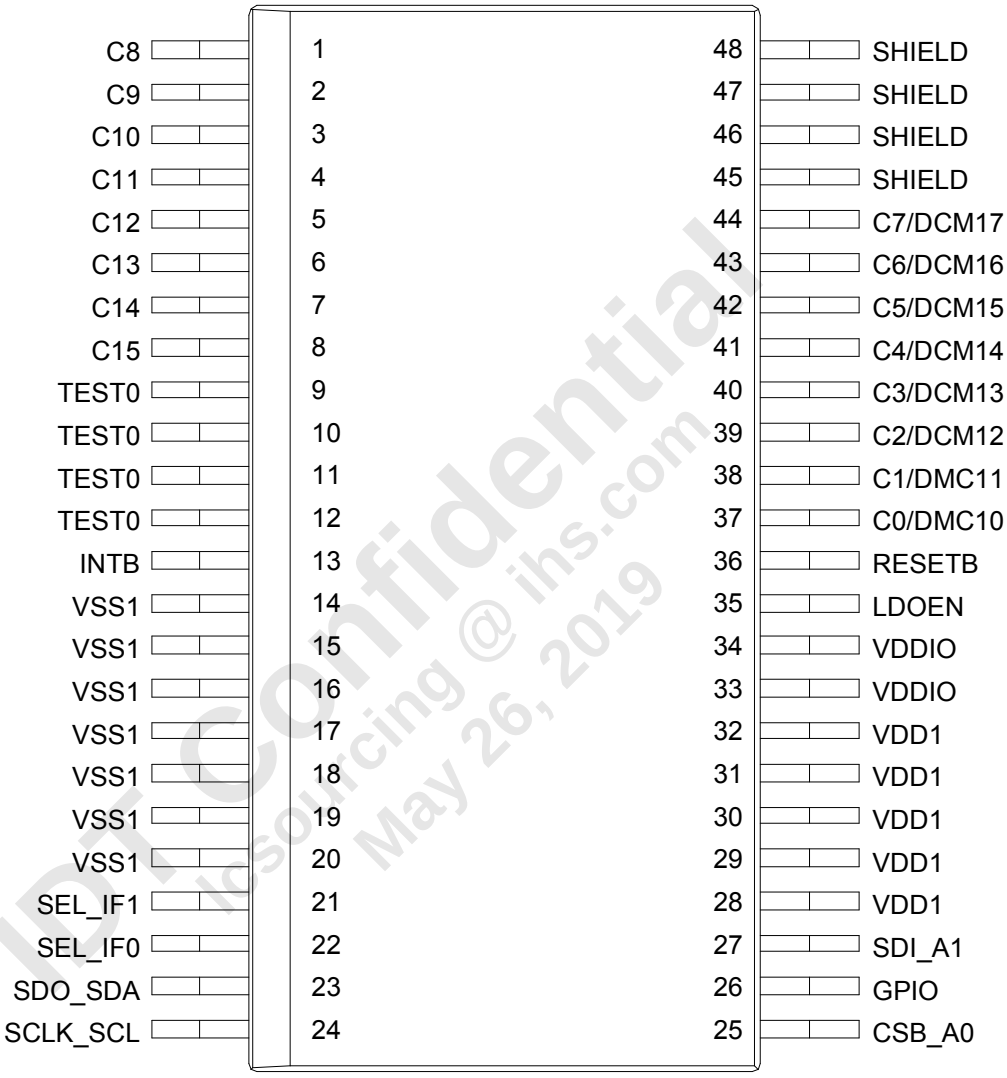

IDT Confidential
iosourcing @ ins.com
May 26, 2019

LDS6120 – 48 pin SSOP

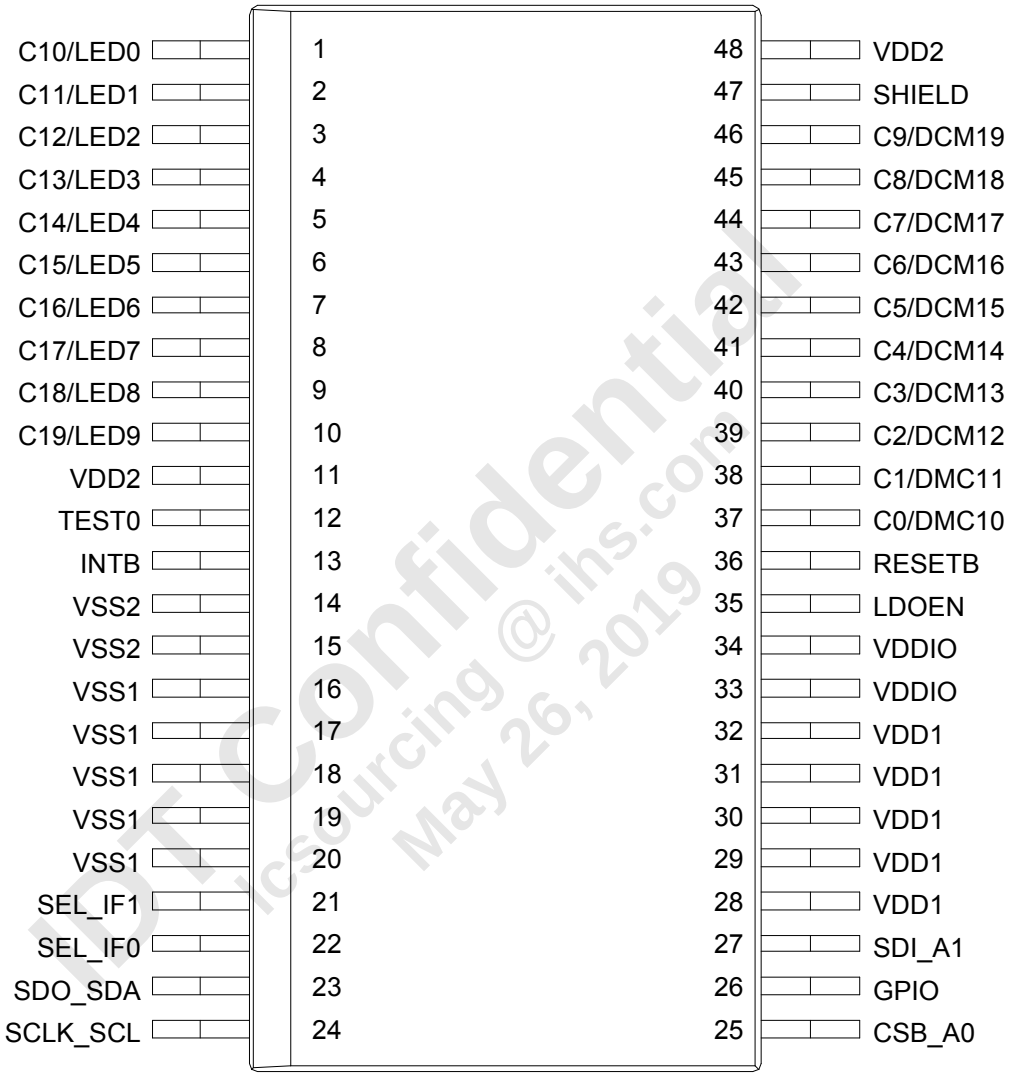

IDT Confidential
icsourcing @ ins.com
May 26, 2019

LDS6128 – 48 pin SSOP

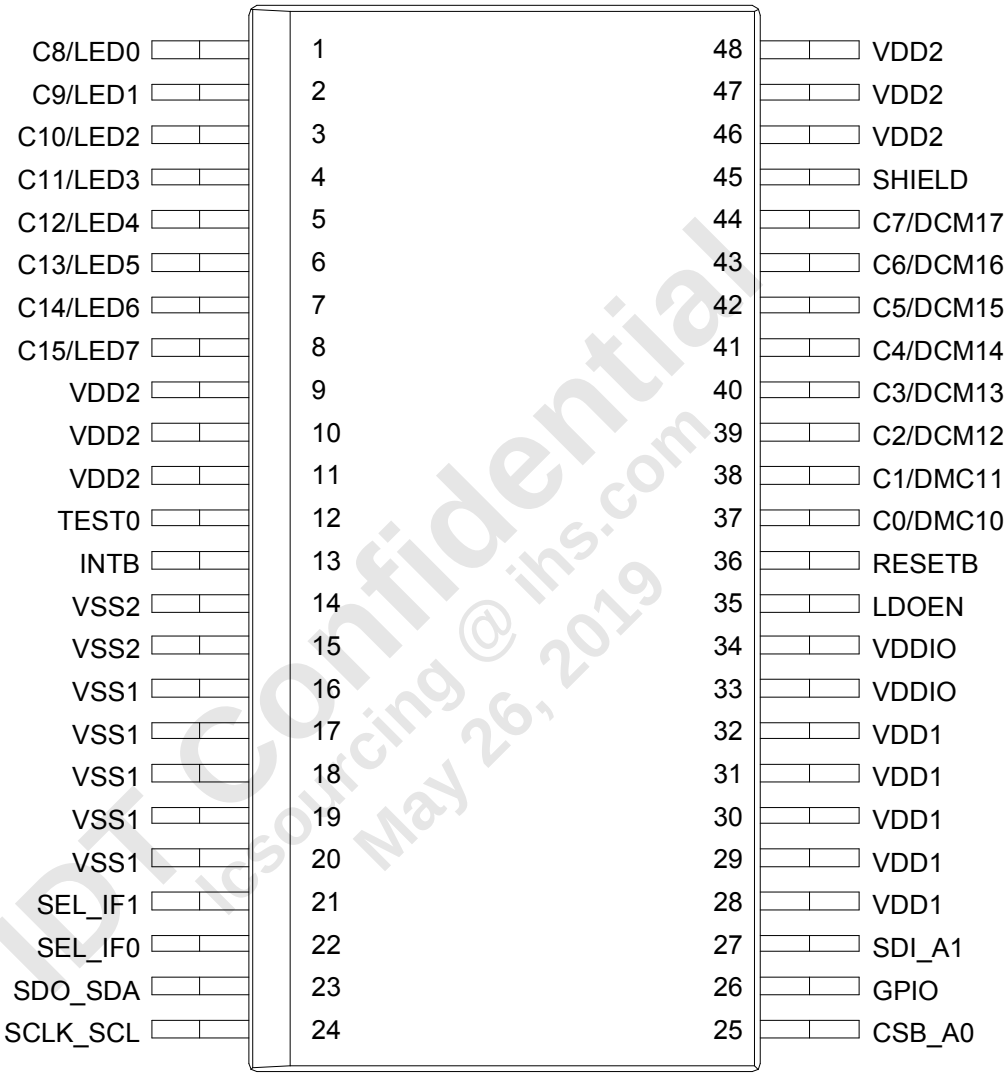

IDT Confidential
iosourcing @ ins.com
May 26, 2019

PIN LIST and FUNCTIONAL DESCRIPTIONS

Pin Name	Functional Description
Cx	Dedicated Capacitance Sensor Input
Cx/DCMy	Dual-Purpose IO Configurable as either Capacitance Sensor Input or Direct Communication Mode Output
Cx/LEDy	Dual-Purpose IO Configurable as either Capacitance Sensor Input or LED Driver
VDD1	Touch Sensor Supply Voltage (1.8V nominal, LDO Disabled)
VSS1	Touch Sensor Ground
LDOEN	LDO Enable ("0" = LDO Disable, 1.8V applied directly to VDD1 pin) ("1" = LDO Enable, Supply Voltage Applied to VDDIO)
VDDIO	Touch Sensor Supply Voltage (>1.95V, LDO Enabled) and/or Serial I/F Operating Voltage
VDD2	LED Driver Supply Voltage (LDS612x only)
VSS2	LED Driver Ground
I/F SEL1/0	SPI / I^2C /SMBus Interface Select (0/0 = I^2C, 0/1 = SMBus, 1/0 = SPI, 1/1 = N/A)
SDO/SDA	SPI Data Output / I^2C Data I/O
SCLK/SCL	SPI Clock Input / I^2C Clock Input
CSB/A0	SPI Chip Select Signal / I^2C Address Bit 0
SDI/A1	SPI Data Input / I^2C Address Bit 1
GPIO	General Purpose Input Output
INTB	Interrupt Output (CMOS Output Default)
RESETB	Hardware Reset pin for device (Active low)
SHIELD	CDC Shield. Connect to external shield/plane to reduce stray capacitance.
TEST	Test pin reserved for factory use. **(Must be left floating)**
N.C.	No Connect **(Must be left floating)**

IDT Confidential
Icsourcing@ifc.com
May 28, 2019

FUNCTIONAL BLOCK DIAGRAM

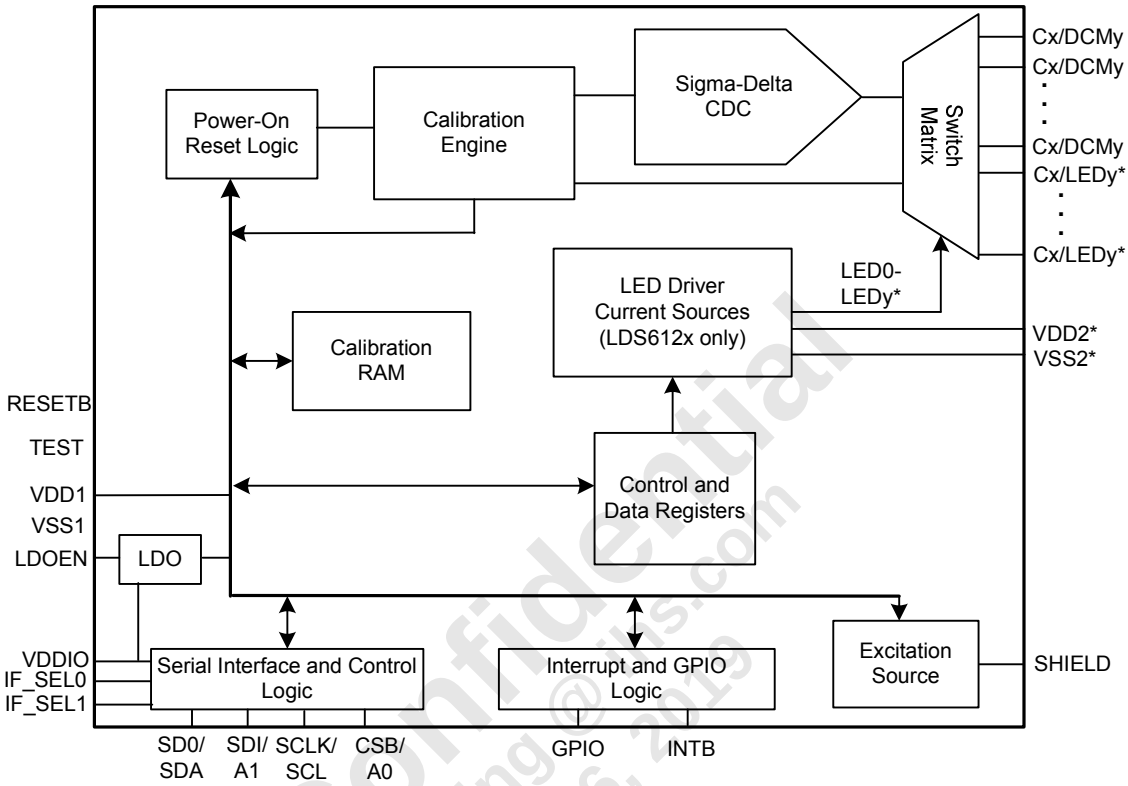

*LED-related functions and supply pins only available on LDS612x products

Figure 11: LDS6100 Family Functional Block Diagram

IDT Confidential
icsourcing@iis.com
May 26, 2015

THEORY OF OPERATION

The LDS6100 PureTouch® Family of capacitive touch controllers feature a highly-accurate capacitance-to-digital converter (CDC) for touch button, slider, and scroll applications. Capacitive sensing is accomplished using a sigma-delta converter capable of converting a sensor input signal into a digital output that is compared against a touch/no-touch threshold value to determine if a touch has occurred. The button status and digitized capacitance values are stored in on-chip registers available to a host processor via the SPI, I^2C, or SMBus-compatible serial interface options.

On-chip self-calibration continously takes environmental effects such as temperature, humidity, and dust into consideration to establish an accurate baseline capacitance for each sensor to ensure maximum responsiveness to true touch events.

The LDS6100 Family includes up to 20 sensor input pins, with a programmable switch matrix determining which sensor inputs are connected to the CDC at any given time. The sensor inputs may be connected to external capacitance sensors arranged as buttons, sliders, scroll wheels or other creatively arranged user inputs. Button, slider, and scroll inputs are natively supported using built in logic, with location and direction automatically calculated for slider and scroll inputs.

On-chip registers allow adjustment of the sampling (decimation) rate, threshold/sensitivity for each individual sensor, and hysteresis and debounce characteristics, enabling a very high degree of configurability in scan rate, button sensitivity and overall touch characteristics.

Approximately half of the available sensor inputs may be configured as output status pins corresponding to a touch sensor, allowing emulation of mechanical button interfaces. On the LDS612x offerings, approximately half of the sensor input pins (those not capable of DCM configuration) may also be utilized as LED drivers for built-in, closed loop (no host control required) activation of visual feedback associated with touch events.

An interrupt output, INTB, is available to notify the host when a touch event has occurred. A GPIO is also available to act as an input to control the INTB output. The GPIO pin may also be configured as an output low or output high pin to turn on and off an external LED.

Due to its ultra-low touch sensor power consumption of <125uW*** (typ), the LDS6100 Family may be operated continuously at full power to achieve the most responsive touch charactersitics and best possible user experience. In this mode, touch sensor detection occurs continuously at very low power levels, eliminating the need for sleep periods between detection cycles that result in touch latency and an inconsistent user experience.

The LDS6100 Family operates with supply voltages ranging from 1.65V to 5.5V for the touch sensor circuits and from 3.0 to 5.5V for the LED driver blocks integrated in the LDS612x products. Available package options vary by device and include thin form factor (0.8mm max, 0.75mm nominal) 4mm x 4mm 28-pin and 5mm x 5mm 40-pin TQFN packages, a 10.2mm x 5.3mm SSOP package for the 28ld products and a 15.7mm x 7.5mm SSOP packaqe for the 48 ld products.

IDT Confidential
sourcing @ ins.com
May 26, 2019

*** 1.8V, excluding VDDIO current, which varies with VDDIO voltage, I/F type, and communication frequency

OPERATING MODES

The LDS6100 Family may be programmed to operate in three different modes.

In full power mode, touch detection occurs continuously, without delays between detection cycles. This mode is utilized when the touch inputs need to be fully active and always responsive to touch inputs. Due to its ultra-low touch sensor power consumption of <125uW***, the LDS6100 Family may be operated continuously in full power mode even when battery life is of premium importance.

The device may also be put into a configurable low power mode for situations where a small inserted delay (typically less than 0.3s) between the first touch and touch reporting is acceptable. This optional low power mode can cut power by more than half.

Lastly, the device can be put into Shutdown mode, which disables touch sensing and lowers power consumption to ~1uW (typical). Only the serial interface bus is active during Shutdown mode to receive any commands (such as exit from Shutdown mode).

Two methods of device reset are provided. Software Reset (writing any value to register 0x001) executes a soft reset of the device by initiating a new calibration cycle and resetting the state machine, including the Interrupt Status Registers. Previously configured control registers, however, are not affected by a Software Reset, so no reconfiguration or re-initialization need occur.

Hardware Reset (setting RESETB low or writing any value to register 0x000) resets the state machine and all previously configured registers, requiring a re-initialization by the host to set configuration registers to their proper state.

Both Software and Hardware Reset take ~0.5-1s in the typical case to return the device to its fully functioning state. The actual time depends upon the number of active sensors requiring calibration and the relative sensor values. Where start-up time is especially important, fine-tuning of certain configuration registers is possible to expedite initial calibration. Please contact your IDT representative if start-up time optimization is required.

POWER-UP/INITIALIZATION SEQUENCE

The power up and initialization sequence involves the following flow:

Power-Up → Cold Reset Command → Initialize Configuration Registers → Software Reset Command

Initialization of the configuration registers is required to define the functionality of each channel, set touch sensitivity levels, and generally specify the desired configuration of the highly flexible LDS6100 Family touch controller. The Cold Reset and Software Reset Commands are required to ensure consistency of operation before and after the initialization process occurs.

AUTOMATIC CALIBRATION MODE

The LDS6100 Family integrates on-chip sensor calibration to compensate for uncontrollable environmental factors such as moisture and temperature changes. Without such compensation, the baseline “no-touch” value may drift over time, affecting the ability of the device to measure valid touch events. The calibration algorithm is executed after every conversion cycle, ensuring that even rapidly changing ambient conditions are well compensated.

*** 1.8V, excluding VDDIO current, which varies with VDDIO voltage, I/F type, and communication frequency

IDT Confidential
ivo.ding @ idt.com
May 26, 2015

LOW POWER MODE CONFIGURATION

Low power mode may be utilized when extremely low power consumption is desired and a small amount of added delay/latency is acceptable. By setting Bit 1 of the Power Configuration Register (0x002) to "1", low power mode is activated and the touch controller will alternate between full power sensing and a lower power sleep mode where power is conserved but touches are not sensed.

The amount of power saved is a function of the sleep period time inserted between full power scan cycles. The full power scan cycle time is equal to ~2ms x the number of active sensors. For example, 10 active sensors would result in a full power scan cycle time of ~20ms.

The amount of sleep time inserted occurs in 1ms increments by setting the Sleep Configuration Register (0x056) to the # of milliseconds desired for the sleep cycle. For example, a setting of 50 (decimal) will insert 50ms of sleep time, lowering the average power consumption compared to a continuous full power state. The longer the sleep period added, the lower the average power consumption will be, with the trade-off of longer potential latency between touch and touch recognition

The following tables show that low power mode current consumption is a function of not only the inserted sleep period, but also the number of active sensors. It should also be noted that the greatest power savings benefit is realized when adding the first ~250ms of sleep period (less when fewer sensors are active). When adding sleep periods longer than ~250ms, the resulting reduction in current is relatively minor. Accordingly, the system designer should take into consideration the # of active sensors and incremental power savings when deciding upon the sleep period, as it may not be materially beneficial to insert longer sleep periods.

In an example scenario of 10 active sensors, current consumption may be lowered to ~26uA*** (>60% current reduction) when introducing a relatively brief 100ms of sleep. Adding an additional 150ms of sleep (for 250ms total) only saves an additional 5uA.

Once a touch is detected, the touch controller will remain in full power mode, maximizing touch responsiveness, until a certain amount of time passes without a touch event. The Sleep Wait Register (0x003) specifies the time the controller will remain in full power mode (waiting for a new touch) before going back to low power mode.

Current vs Sleep Period & Active Sensors (50/100/250ms)

# Active Sensors	Sleep Period (ms)	Current Consumption (uA)	Sleep Period (ms)	Current Consumption (uA)	Sleep Period (ms)	Current Consumption (uA)
1	50	20	100	18	250	18
2	50	22	100	19	250	18
3	50	23	100	20	250	18
4	50	25	100	21	250	19
5	50	26	100	22	250	19
6	50	27	100	23	250	20
7	50	29	100	24	250	20
8	50	30	100	24	250	20
9	50	31	100	25	250	21
10	50	32	100	26	250	21
11	50	33	100	26	250	21
12	50	34	100	27	250	22
13	50	35	100	28	250	22
14	50	36	100	28	250	22
15	50	36	100	29	250	23
16	50	37	100	30	250	23
17	50	38	100	30	250	23
18	50	38	100	31	250	24
19	50	39	100	31	250	24
20	50	40	100	32	250	24

Current vs Sleep Period & Active Sensors (500/1000ms)

# Active Sensors	Sleep Period (ms)	Current Consumption (uA)	Sleep Period (ms)	Current Consumption (uA)
1	500	17	1000	17
2	500	18	1000	17
3	500	18	1000	17
4	500	18	1000	17
5	500	18	1000	18
6	500	18	1000	18
7	500	18	1000	18
8	500	19	1000	18
9	500	19	1000	18
10	500	19	1000	18
11	500	19	1000	18
12	500	19	1000	18
13	500	20	1000	18
14	500	20	1000	18
15	500	20	1000	19
16	500	20	1000	19
17	500	20	1000	19
18	500	20	1000	19
19	500	21	1000	19
20	500	21	1000	19

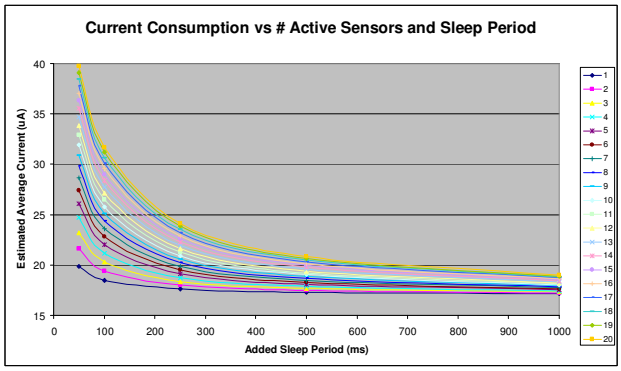

*** 1.8V, excluding VDDIO current, which varies with VDDIO voltage, I/F type, and communication frequency

IDT Confidential
(Sourcing @ Display 2012 Only)

SELECTIVE TOUCH MODES

The LDS6100 Family touch controller is capable of detecting up to 20 simultaneous touches (on LDS6100/6120) when all inputs are configured as touch sensors. However, in certain situations, the application may only allow one or two valid touch events at any given time.

To accommodate such application requirements and avoid inadvertent touches, the LDS6100 Family has four selective touch modes: **Strongest Absolute Touch** and **Two Strongest Absolute Touches**. As the names indicate, Strongest Absolute Touch mode only registers the single strongest touch event at any given time, as judged by the absolute capacitance value, as long as it is above the touch threshold value. Similarly, Two Strongest Absolute Touches mode only registers the two strongest touch events at any given time, as judged by absolute capacitance values.

New to the LDS6100 Family are **Strongest Relative Touch** and **Strongest Two Relative Touches**. Instead of judging strongest touch by absolute capacitance value, the judgments are made looking at the delta between measured capacitance value and touch threshold value. The largest ***delta*** (defined as "capacitance value minus threshold level" for each sensor) is considered the strongest relative touch (and largest two deltas considered the two strongest relative touches). Where sensor sizes (and therefore the resulting capacitance values resulting from a touch) are significantly different, these two new modes can help achieve the desired effect of registering the most definitive/intended touch or touches.

Bits 8 and 9 of the "Touch Configuration Register" (0x040) control whether selective touch is active (Bit 8/9 = 1/0 for Strongest Touch, 0/1 for Two Strongest Touches). The device defaults to the unrestricted or "all touch" mode (Bits 8 and 9 = 0) upon power up.

To select between Absolute and Relative touch preference modes, a single bit RELATIVE_EN (bit 15 of Register 0x076) is utilized, with bit status "0" used for the Absolute modes and bit status "1" used for the Relative Modes.

To avoid frequent toggling of the strongest touch with two touches of comparable strength, an additional (optional) time criteria may be added that requires a new and stronger touch to remain stronger for a certain period of time before replacing the current strongest touch. The REPLACEMENT_TIME bits (0-11 of Debounce and Strongest Touch Configuration Register 0x057) are used for this purpose. This option is available in Strongest Touch mode (Absolute or Relative) only and is not applicable to Two Strongest Touch modes.

RECALIBRATION FOR "STUCK" TOUCHES

The LDS6100 Family of products enables an automatic forced recalibration when a touch persists beyond a certain length of time. This optional feature enables recalibration in the case that some material remains on the sensor resulting in a continuous, but unintended, touch signal.

The Stuck Touch Recalibration Register (0x053) sets the time limit for a continous touch before a recalibration is forced. When a recalibration occurs, all active sensors are recalibrated. **To ensure that a lengthy, but real, touch does not result in recalibration, it is generally advisable to set the timer limit for stick touch recalibration to be well above the expected duration for a valid touch.** The actual time limit is a function of the # of configured active sensors. For more detail on how to set a specific stuck touch time limit, please refer to the Detailed Register Document for the particular device being used.

IDT Confidential
icsourcing @ ins.com
May 26, 2009

TOUCH OPTIMIZATION

DEBOUNCE

The debounce feature enables a time criteria to be set as an “acceptance” criteria for a touch being recognized as valid. Because capactive touch inputs frequently involve rigid overlays, there is no compression or “give” associated with a touch. As a result, a finger may very lightly “bounce” for a period of time, resulting in a fluctuating capacitive effect on the capacitive sensor. If the fluctuation results in capacitance values varying above and below the touch threshold level, multiple touches may be erroneously reported to the host processor.

By setting a time criteria required for the capacitive signal to remain above the threshold value, this type of inadvertant multiple touch event may be eliminated. The Debounce and Strongest Touch Configuration Register (0x057) is used for this purpose. Bits 11-15 set the # of ***consecutive*** scan cycles that the capacitive signal must remain above the touch threshold value before a touch is reported to the host.

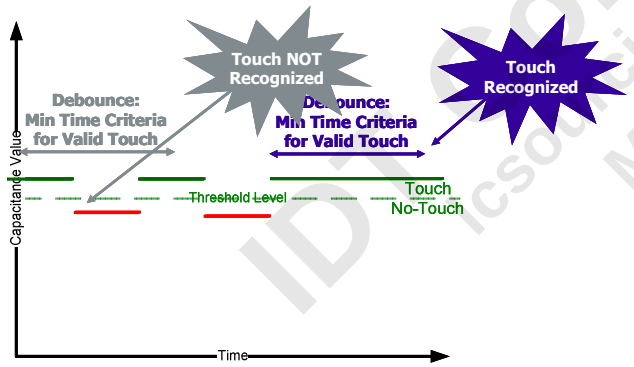

The diagram above shows an example of fluctuating capacitive signal and the debounce time that eliminates multiple touch reporting.

HYSTERESIS

Hysteresis is another method of ensuring touch stability. The hysteresis feature enables a “buffer region” to be established within which the capacitive value of an established touch may vary and still be recognized as a continous touch. Hysteresis Configuration Register 0x075 (bits 0-7) sets the amount of capacitance variation (referenced from the Touch Threshold level depicted in the diagram below) that may be tolerated before the current touch is reported as being removed from the sensor.

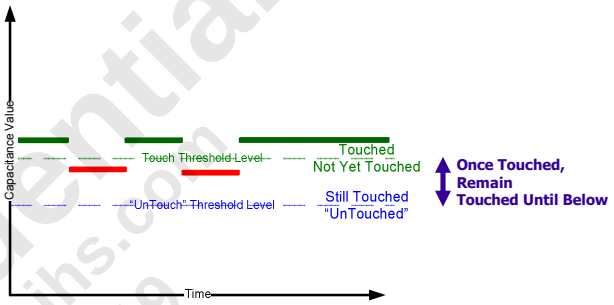

The diagram above shows a typical example of hysteresis, which allows a certain amount of capacitance variation to occur without multiple touch events being reported to the host. In the above diagram, the buffer region is defined by the area below the Touch Threshold Level and above the “UnTouch” Threshold level. This size of this region is effectively specified by programming the amount of capacitance variation allowed via the Hysteresis Configuration Register value.

With hysteresis, the weaker capacitive signal depicted by the two intermittent lines falling below the original touch threshold are now considered a continuation of the original touch since they remain above the UnTouch threshold level.

IDT Confidential
Icsourcing @ ihs.com
May 20 2019

CAPACITANCE-TO-DIGITAL CONVERSION

The LDS6100 Family capacitance-to-digital converter (CDC) utilizes a sigma-delta design for capacitive sensing. Up to 20 sensor inputs are available to be connected through a switch matrix to the CDC.

The nominal decimation (oversampling) rate is 1024, which designates the number of samples acquired per sensor input for each scan cycle. The decimation process averages multiple samples from the CDC to arrive at one optimized result. The process of averaging multiple samples reduces the effect of spurious noise that can adversely affect touch detection.

The decimation rate may be programmed from the nominal value of 1024 to alternate rates of 128, 256, 512, or 2048. Since the update time per sensor is directly affected by the selected decimation rate, care should be taken to assure that the proper balance is achieved between system performance and touch update rates. In the majority of cases, the default decimation rate is optimal.

The conversion time per sensor input depends upon the programmed decimation rate and the possible options are shown in the table below:

Conversion Time/Input vs Decimation Rate (ms)

	Decimation Rate (d)			
	128	256	512	**1024**
Conversion Time	0.256	0.512	1.024	**2.048**

Table 1: Conversion Time (in ms) per Input vs Decimation Rate

The update rate (time between sequential scan cycles) is the product of the single output CDC conversion rate above multiplied by the number of active sensors. For the highest channel LDS6100 and LDS6120 offerings, if all 20 sensor inputs are utilized, the maximum possible update rate would be ~41ms.

SENSOR INPUT CONFIGURATION

Each sensor input channel may be configured individually to designate its status as a touch sensor, DCM output, or LED driver (for LDS612x products).

Approximately half of the available sensor channels are configurable as either touch sensors or DCM outputs. The remaining channels are either dedicated touch sensor channels (LDS610x products) or dual-purpose channels assignable as either touch sensors or LED drivers (LDS612x products). In all cases, a channel may also be designated as floating/unused if it is not connected to an external sensor.

Sensor input configuration is handled by programming configuration registers using the device serial interface. The Sensor Connection Registers ("Sensor Registers" 0x041/0x042) allow configuration as a touch sensor. DCM Configuration Register 0x00A allows configuration of DCM-capable outputs. LED Driver Configuration Register 0x03F allows configuration as LED driver-capable outputs (LDS612x products only).

Where DCM (or LED Driver) Configuration settings conflict with Sensor Connection settings (i.e. both are set to be active), the DCM (or LED Driver) settings will dominate, resulting in activation of the input as a DCM output (or LED driver).

C0-C9 Input Configuration Registers

	C9 DCM19	C8 DCM18	C7 DCM17	C6 DCM16	C5 DCM15	C4 DCM14	C3 DCM13	C2 DCM12	C1 DCM11	C0 DCM10
Sensor Config	0	1	0	1	1	0	1	0	0	1
DCM Config	1	0	1	0	0	1	0	1	1	0
Result	DCM	Sensor	DCM	Sensor	Sensor	DCM	Sensor	DCM	DCM	Sensor

- Assigned As Sensor Input
- Assigned as DCM Output

C10-C19 Input Configuration Registers

	C19 LED9	C18 LED8	C17 LED7	C16 LED6	C15 LED5	C14 LED4	C13 LED3	C12 LED2	C11 LED1	C10 LED0
Sensor Config	1	0	1	0	0	1	0	1	1	0
LED Enable*	1	1	0	1	1	0	1	0	0	1
Result	Sensor	LED	Sensor	LED	LED	Sensor	LED	Sensor	Sensor	LED

- Assigned As Sensor Input
- Assigned as LED Driver (*Available on LDS612x products only)

IDT Confidential
Sourcing @ Risk
May 26, 2015

CDC SEQUENCER

Based upon the status of the sensor input configuration above, the on-board sequencer will proceed to sample all sensor-connected inputs and convert the capacitance measurements to digital capacitive value referenced off a baseline value. Those configured as floating will not be connected to the CDC for conversion.

The number of sensor inputs required for different input types will depend upon the nature of input type. A simple button input that registers only a touch/no-touch situation ("0D") requires only one input. Position-variable inputs with more than just an on/off designation ("1D" inputs such as sliders and scroll wheels) require more than one input, with the required number dependant upon the desired resolution. For example, a coarse scroll wheel may be implemented with only 4 sensor inputs, while a higher resolution version might be implemented with 10 inputs. The LDS6100 Family of products includes built-in 2x interpolation, meaning 2 times the number of touch positions as physical elements can be achieved (2 times # of elements minus 1 in case of sliders). The location ID and direction are available via status registers.

Figures 11 and 12 below show connection examples of both a button/slider combination and a scroll wheel implementation.

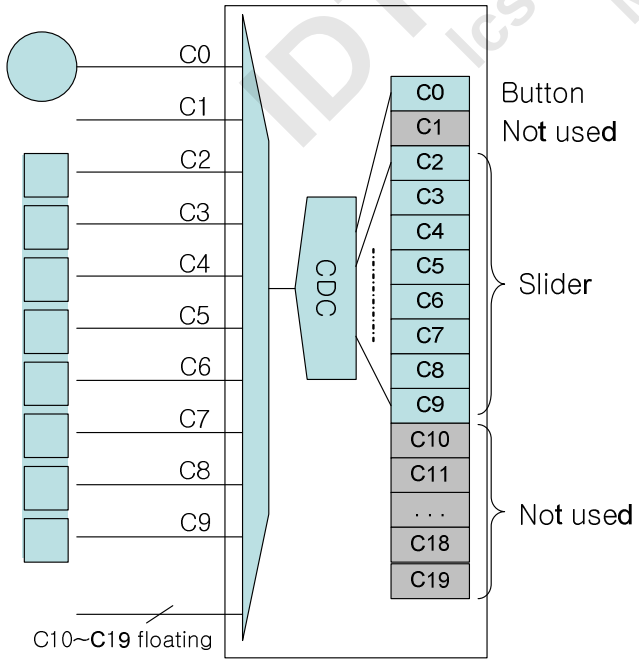

Figure 12: Button/Slider Connection Example

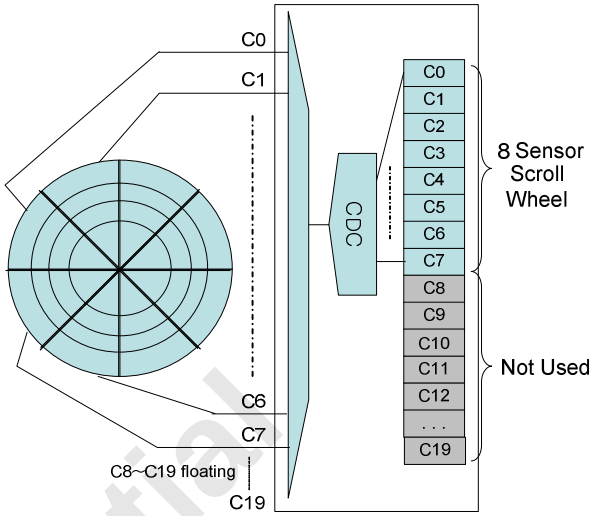

Figure 13: Scroll Wheel Connection Example

More detail on the configuration and usage of the built-in slider/scroll functionality will be available **Application Note 61xxAN1: "LDS61xx Enhanced Functionality Usage and Configuration".**

SIMPLE RETRIEVAL OF TOUCH RESULTS: BUTTONS

The Interrupt Status Registers (0x045 and 0x046) contains the Interrupt status of every sensor input. When the relative magnitude of touch is not important and only touch or no-touch status is required, the Interrupt Status Register is sufficient for determining touch status of buttons.

In the default CMOS and active low configuration, the INTB pin is designed to drive low for 2us when either a valid touch or touch-termination ("untouch") event occurs. In this way, INTB provides notification to the host processor that a touch-relevent event has occurred and the Interrupt Status Registers have been updated. By reading the Interrupt Status Registers and determining which sensor input interrupt bit is high, the system may determine which sensor was touched or untouched. (Note: Using configuration register 0x008, the polarity of the INTB status pin may be inversely configured to drive high when a touch or touch-termination event occurs. This register may also be used to set the INTB status pin to an "open-drain" configuration which requires a pull-up or pull-down resistor, for active-low or active-high modes respectively).

In the default INTB mode, the INTB pin drives low for a fixed 2us duration. **The INTB mode may also be changed to a "Read Reset" mode, whereby the**

IDT Confidential
Icsourcing @ hotmail.com
May 20, 2013

act of reading Interrupt Status Register 0x045 resets the INTB pin back to the high state.

When the next touch-relevant event occurs, the process is repeated, with the host processor being notified by INTB driving low and subsequent reading of the Interrupt Status Registers determining which sensor inputs were touched or "untouched".

For "0D" or simple "on/off" (touch/untouch) inputs like buttons, the results of the Interrupt Status Register are sufficient to take action based on which touch button was activated.

TOUCH RESULTS: SLIDERS AND SCROLL

Position-variable or "1D" inputs with more than an on/off status require the host processor to read back the conversion status results to properly interpret touch location.

The LDS6100 Family offers built-in support for slider and scroll wheels, enabling the user to assign which sensor channels are utilized in slider or scroll input types. Slider/Scroll Configuration register 0x074 allows up to 10 channels (C0-C9) to be assigned as slider/scroll wheel elements. A separate slider/scroll interrupt bit is available, as well as a direction bit and 5-bit location ID register to directly read the current location being touched as well as the direction of movement. Two times interpolation is available to generate two times (two times minus one for sliders) the number of reported touch positions as actual touch elements to support higher resolution requirements.

For more information on configuring slider and scroll wheel setup and interpreting the results registers, please see the Application Note 61xxAN1: "LDS61xx Enhanced Functionality Usage and Configuration".

Interpolation to achieve higher than 2x resolution enhancement is possible by using host-side algorithms to read the digital capacitance values and interpolate beyond the 2x level. The degree of interpolation achievable is a function of the sensor size, shape, and overlay thickness. Contact your local IDT contact for more information on >2x interpolated slider and scroll implementations.

Note: When utilizing the built-in slider/scroll mode and the dedicated Scroll/Slider Interrupt Enable mode is set to ON (0x074 bit 15 = 1), the Scroll Status register 0x04B must be read before the interrupt pin status is released from it's driving state.

DT Confidential
icsupply @ ins.com
July 26, 2019

OUTPUTS

GPIO OUTPUT

The GPIO pin may be disabled, configured as an input to control the INTB output (details on usage of GPIO as an input follow on page 38), or configured as either a low or high output. The "GPIO Configuration Register" (0x009) bits [1:0] are used for this purpose. The default state for GPIO is the output low state.

Use of the GPIO as an output can used to turn on and off an LED if used with as the gate control of an external transistor which supplies the LED drive current. This may also be used to drive a higher current LED than may be supported by the single LED driver current of 7.75mA.

INTERRUPT (INTB)

The INTB output notifies the host processor of an interrupt event. Interrupt events are classified into two categories: a sensor touch or untouch interrupt or a GPIO input generated interrupt.

By default, the INTB pin is configured as an active-low CMOS output, with no pull-up resistor necessary. When an interrupt event occurs, the LDS6100 Family pulls the INTB pin low to signal the host processor that a touch-relevant event has occurred. **There are multiple INTB driving modes available in the LDS6100 Family. In the default "Fixed Duration" mode, the INTB pin is actively driven for 2us before it is released.**

Once the interrupt signal is triggered, the host processor may read the Interrupt Status Registers (0x045 and 0x046) to determine which type of interrupt has occurred (Bit 15 of 0x046 for GPIO input generated interrupt, other bits for touch generated interrupts). In the case of a touch or untouch event, a touch (finger down) will result in a "1" in the associated sensor register bit, while an untouch (finger up) will result in a "0".

Another INTB mode offered (register 0x008 bit 1 = "1") is the "Read Reset" mode. In this mode, the the INTB pin itself is reset (no longer actively driven) once the host completes a read operation of Touch Status Register 0x045, enabling the next interrupt event to be sensed and communicated.

Touch and Untouch Interrupts

As mentioned in the above section, two interrupt events will be registered once a touch occurs: the first when contact is made with the capacitive sensor (finger down or "touch"), and again when contact is terminated (finger up or "untouch"). The figure below illustrates this.

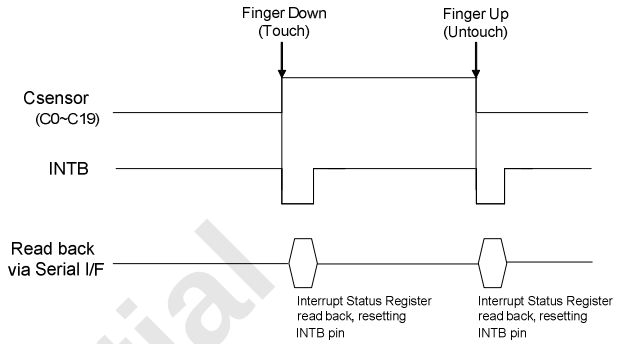

Figure 14: Sensor Activation Interrupt Example

The second interrupt notifies the host that the touch stimulus is no longer in contact with the sensor.

In order for the second interrupt to be properly differentiated from the first the Read Reset INTB mode, the host should read back the Interrupt Status Registers when INTB is first pulled low to enable the INTB pin to return to its high state and be re-triggered when the untouch event occurs.

SHIELD

In the default device configuration, the SHIELD pin outputs the identical excitation waveform as that used on the actively read sensor input. In this configuration, SHIELD may effectively be utilized to reduce stray capacitance to ground that has the potential to affect the capacitance-to-digital conversion process.

By shielding both a) the connection traces between sensor array and LDS6100 Family sensor inputs and b) the shield plane around the sensor array elements themselves, stray capacitance is significantly reduced. Interactions between adjacent connection traces and between closely spaced sensor array elements are also reduced and longer distances between sensor array and LDS6100 Family may be supported while still achieving a high level of touch performance.

Please refer to AN5: Preliminary Use of SHIELD application note for more guidance on use of the SHIELD pin.

IDT Confidential
lesourcing@idt.com
May 26, 2012

GPIO AS INPUT TO INTERRUPT SIGNAL

The GPIO pin may also be configured as an input to control the interrupt output INTB by programming the bits [1:0] in the "GPIO Configuration Register" (0x009) to [0,1]. When using GPIO as an input, INTB can be triggered on a low level, high level, falling edge, rising edge, or on both falling and rising edges of the GPIO pin. The GPIO Input Configuration bits (bits [4:2] of register 0x009) determine which stimuli type will trigger INTB. Figures 14-18 illustrate the various types of input triggers.

The GPIO status bit in the second Interrupt Status Register (Bit 15 of register 0x046) indicates that the GPIO trigger condition occurred. After a host reads this status register, the GPIO status bit and INTB signal are cleared (assuming the original triggering condition is no longer present) and no touch events are otherwise causing INTB to remain low.

Register 0x009 Bits [4:2]	Input Stimuli Type
000	**Not used (Default)**
001	Low level trigger
010	High level trigger
011/100	Not used
101	Falling edge trigger
110	Rising edge trigger
111	Both edge trigger

Table 3: GPIO Interrupt Configuration

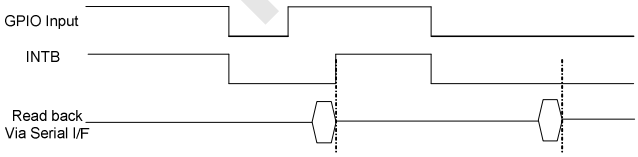

Figure 15: GPIO Low Level Trigger
(GPIO Input Cfg = "001")

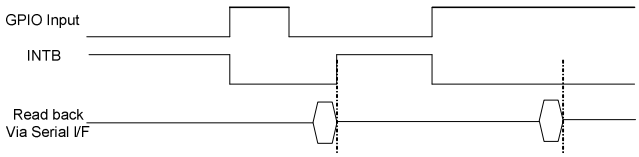

Figure 16: GPIO High Level Trigger
(GPIO Input Cfg = "010")

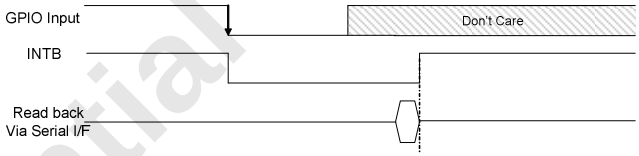

Figure 17: GPIO Falling Edge Trigger
(GPIO Input Cfg = "101")

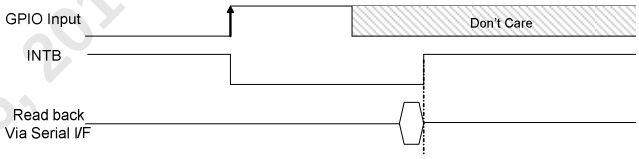

Figure 18: GPIO Rising Edge Trigger
(GPIO Input Cfg = "110")

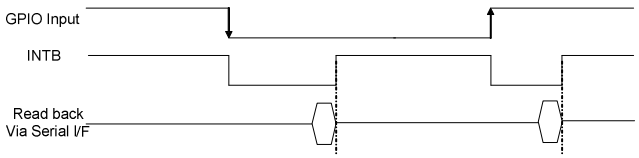

Figure 18: GPIO Both (Falling/Rising) Edge Trigger
(GPIO Input Cfg = "111")

IDT Confidential
Testing @ ins.com
May 26, 2019

INTEGRATED LED DRIVERS (LDS612X)

Half of the sensor input channels (6 out of 11 on the LDS6126) on the LDS612x products may be used either as sensor inputs or may be configured as LED drivers.

Supply voltage VDD2 is utilized as the drive voltage and an integrated "true current control" source allows for flexible current control from 0-7.75mA in 0.25mA increments, enabling smooth dimming functionality for LEDs. In cases where more current capability is required, two or more inputs may be connected to a single LED, resulting in a multiplying of the maximum current capability to as much as 77.5mA (in the case of the 10 LED driver LDS6120 IC).

During the sensor configuration process, any of the unused channels with the Cx/LEDy designation may be assigned as an LED driver using the LED Driver Enable Register (0x03F). Setting the LED driver enable bit active (enable = 1) results in the assigned pin being activated as an LED driver. The priority of the LED driver enable bits in register 0x03F have higher priority than the sensor pin enable selection bit of the Sensor Connection Registers (0x041 and 0x042). Where both LED Register and Sensor Register bits are set active ("1"), the LED Register dominates, resulting in assigment of the input as LED driver. An example using the LDS6120 device with 10 dual-purpose channels is shown below.

LED Driver Enable Register (On=1, Off=0)

	C19/ LED9	C18/ LED8	C17/ LED7	C16/ LED6	C15/ LED5	C14/ LED4	C13/ LED3	C12/ LED2	C11/ LED1	C10/ LED0
LED Register	1	1	1	1	0	1	1	0	1	0
Sensor Register	1	0	0	0	1	0	1	1	0	1
Result	LED	LED	LED	LED	Sensor	LED	LED	Sensor	LED	Sensor

- Assigned As Sensor Input
- Assigned as LED Driver

The "LED Driver Configuration Registers" (0x020 and 0x029) allow a 1:1 association of an LED driver to a particular sensor input. An example using the LDS6120 device is shown below. Note: The appropriate 5-bit value for a touch sensor may not be its corresponding binary value. Please consult the Detailed Register Map Document for each device for the actual binary value.

LED Driver to Sensor Assigment Registers

LED9	LED8	LED7	LED6	LED5	LED4	LED3	LED2	LED1	C10/ LED0
00000	00001	00110	00101	00011	01000	00010	00100	00111	X
Assigned as LED Drivers									
C0	C1	C6	C5	C3	C8	C2	C4	C7	

- Assigned As Capacitive Input

With this configuration, initiation of LED driver functionality occurs automatically upon a touch event, independent of host intervention, freeing up the host processor system resources for other tasks. In addition, the variable system-dependent latency associated with a host-dependent process is eliminated.

The LED Driver Configuration Registers also allow configuration of both the minimum and maximum current associated with each LED driver. The minimum LED current is the "no-touch" LED drive current. By setting a non-zero minimum LED current, the LEDs may remain illuminated at a low level even when no touch is present. The touch event will trigger the transition to the maximum current setting. The current levels are set in 0.25mA increments, which may be set on an individual LED basis. Examples of minimum and maximum current settings for the LDS6120 device are shown below:

Minimum LED Current (0.25ma Increments)

LED9	LED8	LED7	LED6	LED5	LED4	LED3	LED2	LED1	C10/ LED0
00000	00000	00001	00001	00010	00000	00001	00010	00100	X
Assigned as LED Drivers									
0mA	0mA	0.25mA	0.25mA	0.5mA	0mA	0.25mA	0.5mA	1.0mA	

- Assigned As Capacitive Input

Maximum LED Current (0.25ma Increments)

LED9	LED8	LED7	LED6	LED5	LED4	LED3	LED2	LED1	C10/ LED0
01000	11111	11100	10101	11100	11000	00001	11100	10110	X
Assigned as LED Drivers									
2mA	7.75mA	7.0mA	5.25mA	7.0mA	6.0mA	0.25mA	7.0mA	5.50mA	

- Assigned As Capacitive Input

Built-in effects are available via the "LED Effects Configuration Registers" 0x030 to 0x039. Three modes are available: Dimming, Flash, and Pulsate.

The Dimming effects occur upon initial touch (dim on) and upon removal of a touch (dim off). The Flash and Pulsate effects occur only while the touch is in effect. The Flash and Pulsate cycle in progress will complete after removal of the touch to avoid an abrupt termination of the in-progress effect.

There is one LED Effect Configuration Register per available LED driver, resulting in the ability to customize the effect and effect characteristics per individual LED. The effects are created by setting up to three timer values, each of which is associated with a certain portion of the effect waveform. Two of the three timers are individual per LED, while one timer is global for all LED drivers.

For more information on creating the more sophisticated visual effects associated with Flash and Pulsate, please see the Application Note 61xxAN1: "LDS61xx Enhanced Functionality Usage and Configuration".

IDT Confidential
Acsourcing @ ths.com
May 2 2013

For the Dimming effect, the dimming transition times between LED off/on and on/off are programmed on an individual basis for each LED and a different timer is used for the on versus off transition, enabling a wide variety of different visual characteristics with the Dimming effect category. To activate Dimming, Bit 14 (EN_DON) of the "LED Driving Waveform Configuration Register" (0x02F) is used to enable on-transition dimming and Bit 15 (EN_DOFF) is used to enable off-transition dimming. These are global bits, but do not affect the Flash or Pulsate effect modes. If quick transitions are desired (i.e. no dimming) for some LEDs and dimming desired for others, these dimming enable bits should still be set active (bit/s set to "1"), but the respective timers may be set to "0" for the LEDs requiring quick transitions.

Smooth dimming transitions are facilitated by the use of 250µA dimming steps. It should be noted, however, that for low maximum current levels and longer transition times, dimming steps may occur at a frequency that may be noticeable.

Two additional registers are available for enhanced control:

Gang Mode: Setting the gang mode register bit active (Bit 14 of "LED Driver Global Configuration Register" 0x03E, active = 1) results in all LED drivers being activated together by a touch event on any sensor input. The default condition is gang mode off.

Active Time: The active time setting (Bits [7:0] of "LED Driving Waveform Configuration Register" 0x02F) is a 8-bit global register setting the duration that the LED drivers remain active after the touch event ceases. This Active Time value is also used as one of the effect timers for the Flash and Pulsate effects. Because this setting is global, care should be taken to balance the impact this register has on the different LED effects that will be simultaneously used in an application.

LED SYNCHRONIZATION WITH OTHER EFFECTS

Because LED illumination is controlled within the touch controller, LED illumination is effectively immediate with no host-related latencies between touch and visual feedback. However, if other types of feedback are implemented (e.g. sound or haptics), there may be delays associated with those other forms of feedback.

To enable synchronization between feedback types, the LDS612x offerings allow a delay to be added in increments of 5ms using bits 0-7 of the LED Driver Latency Configuration Register (0x02E).

If, for example, the inherent system delay between touch recognition by the host and initiation of sound and haptics effects is 30ms, then 30ms of delay may be added by setting the latency register to a value of "6" (6 delay cycles x 5ms per cycle = 30ms). By synchronizing all forms of user feedback, the user experience may be significantly enhanced.

MANUAL CONTROL OF LED DRIVERS

The LED driver function may also be used independent of a touch event simply by programming the LED Driver Manual Control Register (bits [9:0] of register 0x03E). In this way, the LED drivers may be used for other effects to enhance the user experience. An example for the LDS6120 showing 5 of the available 10 LEDs under manual control is shown here:

LED Driver Manual Control (On=1, Off=0)

C19/ LED9	C18/ LED8	C17/ LED7	C16/ LED6	C15/ LED5	C14/ LED4	C13/ LED3	C12/ LED2	C11/ LED1	C10/ LED0
1	1	0	0	1	0	0	1	1	X
Assigned as LED Drivers									
On	On	Off	Off	On	Off	Off	On	On	

- Assigned As Capacitive Input

The default setting for the manual control mode is all LED drivers OFF. Once register bits are set to ON ("1"), the LED drivers will remain on until the manual control register bits are reset to OFF ("0").

LED DRIVER VOLTAGE SUPPLY

The voltage applied on VDD2 supplies the voltage drive to the LEDs, with the LDS6100 Family internally regulating the current flow. Whether Vbatt is used directly or a regulated system voltage is applied to VDD2, the system designer must assure that the voltage applied to VDD2 will be sufficient to exceed the forward drive voltage of the selected LEDs by ~1V. When Vbatt is used directly on VDD2, the associated voltage should exceed the LED forward drive voltage by ~1V over the entire planned discharge range of the system battery for consistent operation of LED functionality.

OVER-TEMPERATURE PROTECTION

Over-temperature shutdown protection is implemented with an internal temperature limit. When this limit is exceeded, the LED driver is temporarily disabled to protect against fault conditions such as shorted or defective LEDs. When the temperature cools below the limit, the over-temperature protection deactivates and the LED driver will be re-enabled.

IDT Confidential
Routing @ ... May 26 2015 ...

PACKAGE DRAWING AND DIMENSIONS

28-PIN TQFN, 4mm x 4mm, 0.4mm PITCH

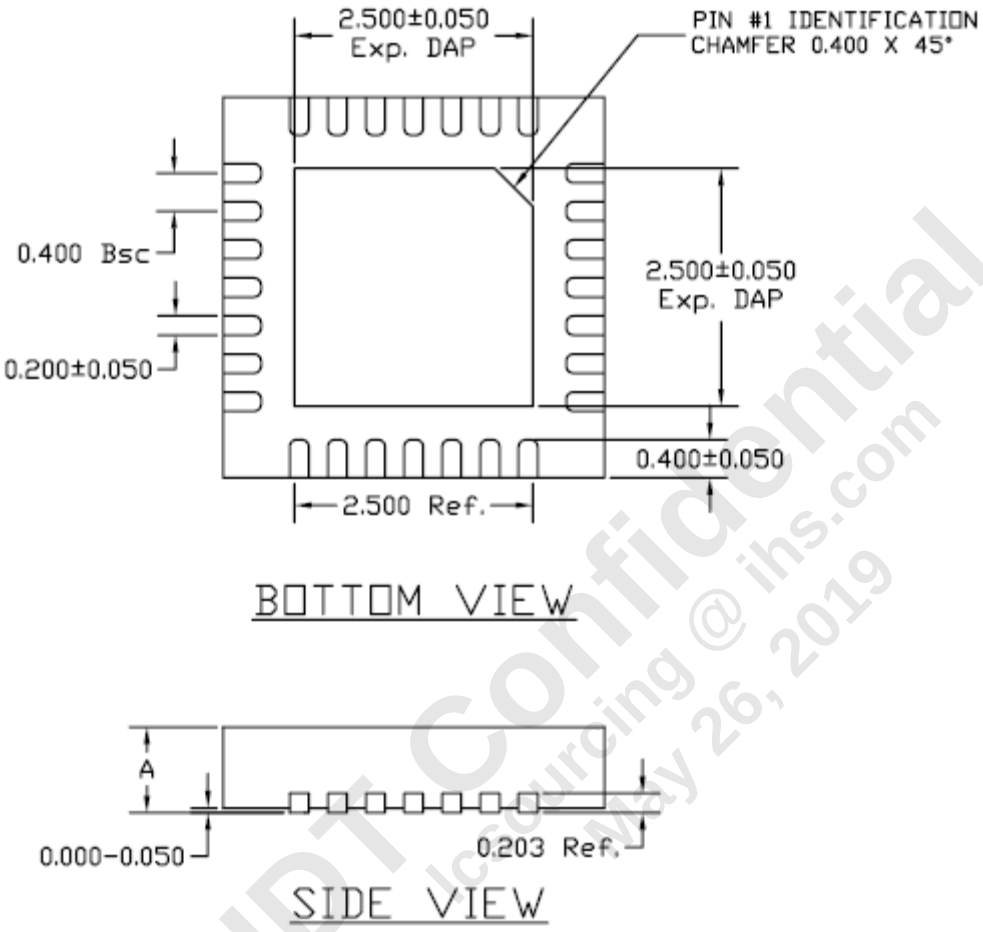

IDT Confidential
Jc.seurging @ ins.com
May 26, 2019

SYMBOL	MIN	NOM	MAX
A	0.70	0.75	0.80

Note:
1. All dimensions are in millimeters
2. Complies with JEDEC Standard MO-220

PACKAGE DRAWING AND DIMENSIONS

28-PIN SSOP, 5.30mm x 10.20mm, 0.65mm PITCH

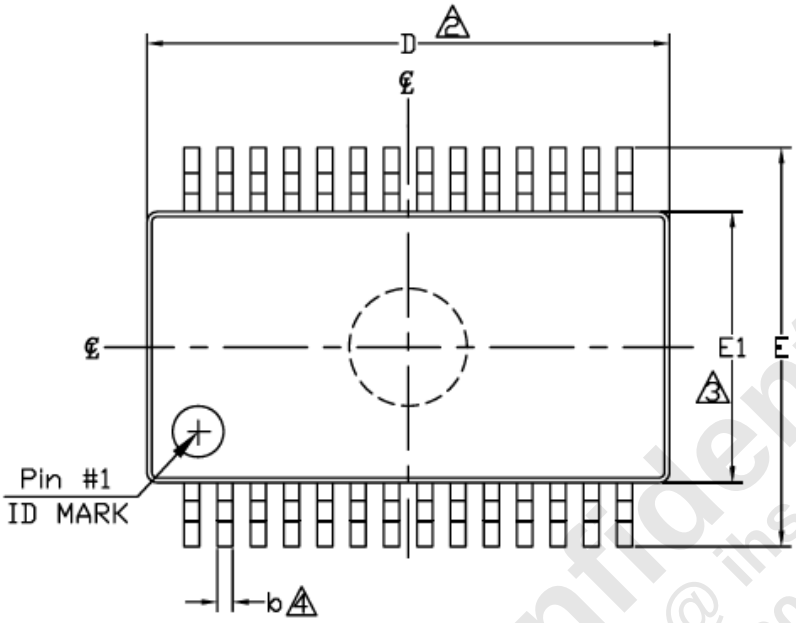

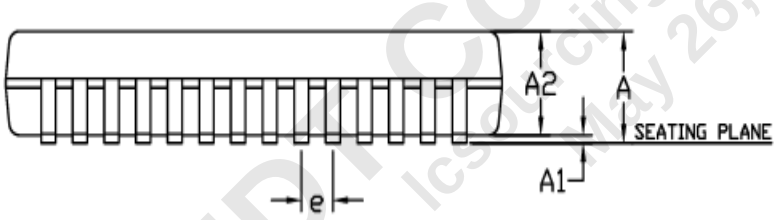

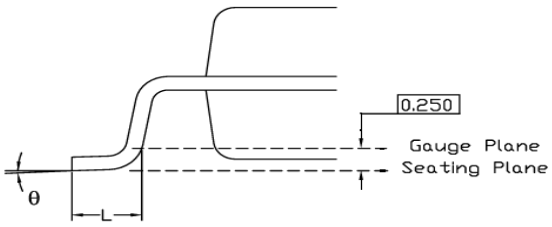

SYMBOL	28L SSOP			NOTE
	MIN.	NOM.	MAX.	
A	1.73	1.86	1.99	
A1	0.05	0.13	0.21	
A2	1.65	1.73	1.83	
b	0.25	0.30	0.38	4,5
c	0.13	0.16	0.22	5
D	10.07	10.20	10.33	2
E	7.65	7.80	7.90	
E1	5.20	5.30	5.38	3
e	0.65 BSC			
L	0.56	0.76	0.95	
θ	0°	4°	8°	

NOTES:

1. ALL DIMENSIONS ARE IN MILLIMETERS.
2. PACKAGE LENGTH DOES NOT INCLUDE MOLD FLASH, PROTRUSIONS OR GATE BURRS.
3. PACKAGE WIDTH DOES NOT INCLUDE INTERLEAD FLASH OR PROTRUSION.
4. THIS DIMENSION APPLIES TO THE FLAT SECTION OF THE LEAD BETWEEN 0.10 AND 0.25mm FROM THE LEAD TIPS.
5. THIS DIMENSION IS INCLUSIVE OF PLATING.
6. 5.3mm BODY WIDTH,0.65mmPITCH & 1.25mm LEAD LENGTH.

IDT Confidential
Icsourcing @ ihs.com
May 26, 2019

PACKAGE DRAWING AND DIMENSIONS

40-PIN TQFN, 5mm x 5mm, 0.4mm PITCH

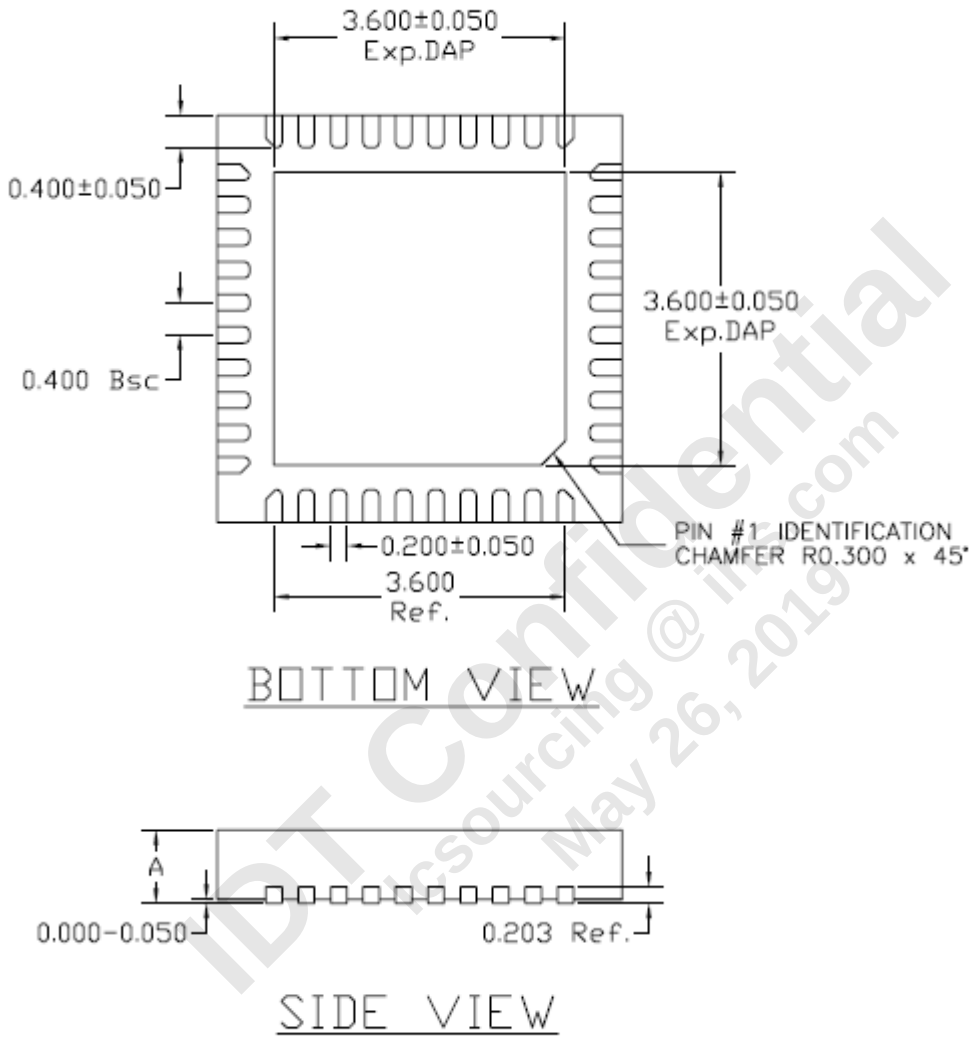

SYMBOL	MIN	NOM	MAX
A	0.70	0.75	0.80

Note:
3. All dimensions are in millimeters
4. Complies with JEDEC Standard MO-220

IDT Confidential
Icsourcing @ ins.com
May 26, 2019

PACKAGE DRAWING AND DIMENSIONS

48-PIN SSOP, 15.7mm x 7.5mm, 0.635mm PITCH

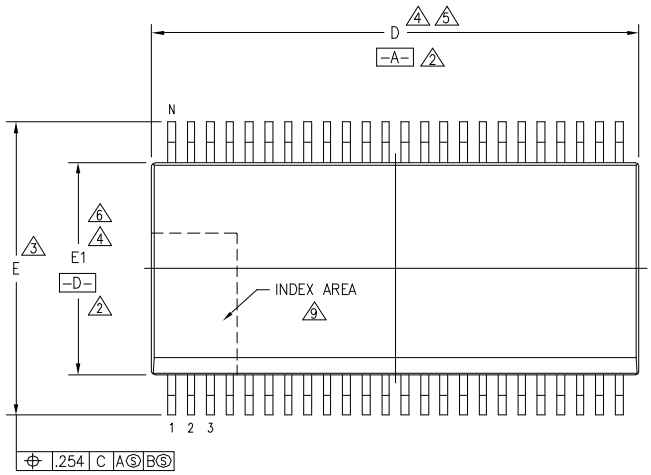

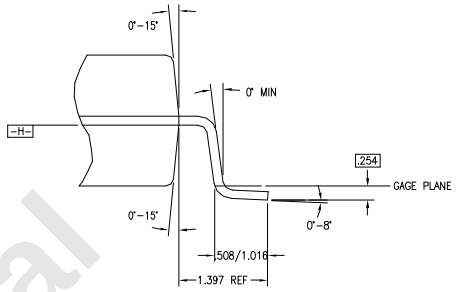

DETAIL B

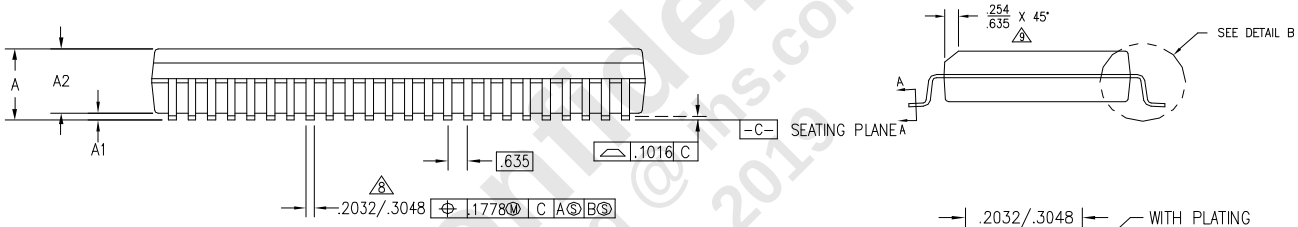

SYMBOL	JEDEC VARIATION AA			NOTE	JEDEC VARIATION AB			NOTE
	MIN	NOM	MAX		MIN	NOM	MAX	
A	2.413	2.5908	2.794		2.413	2.5908	2.794	
A1	.2032	.3048	.4064		.2032	.3048	.4064	
A2	2.2352	2.286	2.3368		2.2352	2.286	2.3368	
D	15.748	15.748	16.002	4,5	18.288	18.415	18.542	4,5
E	10.033	10.287	10.668	3	10.033	10.287	10.668	3
E1	7.3914	7.493	7.5946	4,6	7.3914	7.493	7.5946	4,6
N	48				56			

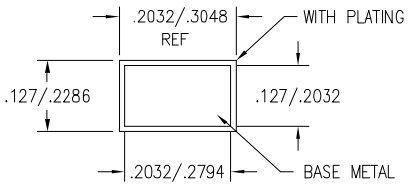

SECTION A-A

LAND PATTERN DIMENSIONS

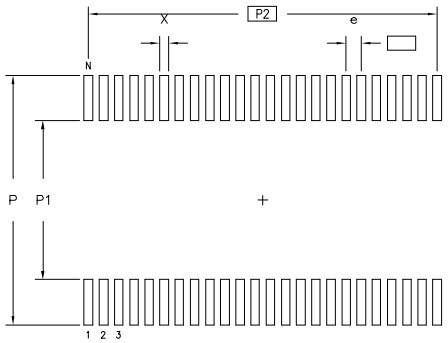

	MIN	MAX	MIN	MAX
P	11.43	11.6332	11.43	11.6332
P1	7.1628	7.366	7.1628	7.366
P2	14.605 BSC		17.145 BSC	
X	.254	.4572	.254	.4572
e	.635 BSC		..635 BSC	
N	48		56	

NOTES:

1. ALL DIMENSIONING AND TOLERANCING CONFORM TO ANSI Y14.5M-1982
2. DATUMS -A- AND -B- TO BE DETERMINED AT DATUM PLANE -H-
3. DIMENSION E TO BE DETERMINED AT SEATING PLANE -C-
4. DIMENSIONS D AND E1 ARE TO BE DETERMINED AT DATUM PLANE -H-
5. DIMENSION D DOES NOT INCLUDE MOLD FLASH, PROTRUSIONS OR GATE BURRS. MOLD FLASH, PROTRUSIONS AND GATE BURRS SHALL NOT EXCEED .1524 PER SIDE
6. DIMENSION E1 DOES NOT INCLUDE INTERLEAD FLASH OR PROTRUSIONS. INTERLEAD FLASH OR PROTRUSIONS SHALL NOT EXCEED .381 PER SIDE
7. THESE DIMENSIONS APPLY TO THE FLAT SECTION OF THE LEAD BETWEEN .127 AND .254 FROM LEAD TIP
8. LEAD WIDTH DIMENSION DOES NOT INCLUDE DAMBAR PROTRUSION. ALLOWABLE DAMBAR PROTRUSION IS .1016 mm EXCESS OF THE LEAD WIDTH DIMENSION AT MAXIMUM MATERIAL CONDITION. DAMBAR CANNOT BE LOCATED ON THE LOWER RADIUS OR THE FOOT
9. THE CHAMFER ON THE PACKAGE BODY IS OPTIONAL. IF IT IS NOT PRESENT, A VISUAL INDEX FEATURE MUST BE LOCATED WITHIN THE ZONE INDICATED
10. ALL DIMENSIONS ARE IN mm
11. THIS OUTLINE CONFORMS TO JEDEC PUBLICATION 95 REGISTRATION MO-118, VARATION AA & AB

Note: All dimensions are in millimeters

IDT Confidential
Printing @ ims.com
May 26, 2013

ORDERING INFORMATION

Part Number*	Package	Package Marking
LDS6100NQGI8	TQFN-40 5 x 5mm(1)	NQG
LDS6100PVGI8	SSOP-48 7.5 x 15.7mm(1)	PVG
LDS6104NQGI8	TQFN-28 4 x 4mm(1)	NQG
LDS6104PYGI8	SSOP-28 5.3mm X 10.2mm(1)	PYG
LDS6107NQGI8	TQFN-28 4 x 4mm(1)	NQG
LDS6107PYGI8	SSOP-28 5.3mm X 10.2mm(1)	PYG
LDS6108NQGI8	TQFN-40 5 x 5mm(1)	NQG
LDS6108PVGI8	SSOP-48 7.5 x 15.7mm(1)	PVG
LDS6120NQGI8	TQFN-40 5 x 5mm(1)	NQG
LDS6120PVGI8	SSOP-48 7.5 x 15.7mm(1)	PVG
LDS6124NQGI8	TQFN-28 4 x 4mm(1)	NQG
LDS6124PYGI8	SSOP-28 5.3mm X 10.2mm(1)	PYG
LDS6126NQGI8	TQFN-28 4 x 4mm(1)	NQG
LDS6126PYGI8	SSOP-28 5.3mm X 10.2mm(1)	PYG
LDS6128NQGI8	TQFN-40 5 x 5mm(1)	NQG
LDS6128PVGI8	SSOP-48 7.5 x 15.7mm(1)	PVG

Notes (*Remove the "8" at the end of the part number for non-T/R option):

1. Matte-Tin Plated Finish (RoHS-compliant)
2. Quantity per reel is 2500 for TQFN package and 1500 for SSOP package

IDT Confidential
Issuing @ ihs.com
May 26 2019

EXAMPLE OF ORDERING INFORMATION

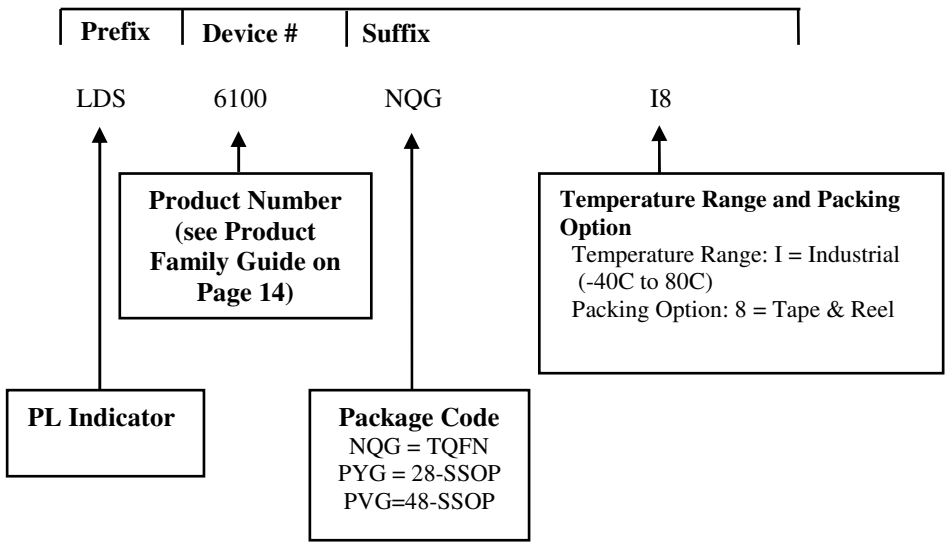

REVISION LOG

Date	Rev.	Reason
10/13/09	0.0	Initial Draft
10/30/09	0.1	Amended low power table, added new sections for features not covered in Rev 0.0
11/12/09	0.2	Corrected debounce diagram
01/20/10	0.3	Expanded on Interrupt Pin options and resettting Interrupt Pin
09/21/10	0.4	Added application circuit diagram for connecting the device using single voltage source and corrected typos. Added clarifications about the SPI interface.
1/19/11	0.5	Included 48 pin SSOP package offering for LDS6120
6/23/11	0.6	Included 48 pin SSOP package offering for LDS6108, LDS6128, LDS6100

DISCLAIMER Integrated Device Technology , Inc. (IDT) and its subsidiaries reserve the right to modify the products and/or specifications described herein at any time and at IDT's sole discretion. All information in this document, including descriptions of product features and performance, is subject to change without notice. Performance specifications and the operating parameters of the described products are determined in the independent state and are not guaranteed to perform the same way when installed in customer products. The information contained herein is provided without representation or warranty of any kind, whether express or implied, including, but not limited to, the suitability of IDT's products for any particular purpose, an implied warranty of merchantability, or non-infringement of the intellectual property rights of others. This document is presented only as a guide and does not convey any license under intellectual property rights of IDT or any third parties.
IDT's products are not intended for use in life support systems or similar devices where the failure or malfunction of an IDT product can be reasonably expected to significantly affect the health or safety of users. Anyone using an IDT product in such a manner does so at their own risk, absent an express, written agreement by IDT.
Integrated Device Technology, IDT and the IDT logo are registered trademarks of IDT. Other trademarks and service marks used herein, including protected names, logos and designs, are the property of IDT or their respective third party owners.

IDT Confidential
ic.sourcing@ihs.com
May 25, 2019

6024 Silver Creek Valley Road
San Jose, California 95138
http://www.idt.com

Document No: 6100 Family DS
Revision: 0.7
Issue date: 4/17/12