MICRO SWITCH
FREEPORT ILLINOIS U S A
A DIVISION OF HONEYWELL
FED. MFG. CODE 91929

SWITCH-TOGGLE

CATALOG LISTING
11TW8 SERIES
CHART 2

THIS DRAWING COVERS A PROPRIETARY ITEM AND IS THE PROPERTY OF MICRO SWITCH, A DIVISION OF MINNEAPOLIS-HONEYWELL REGULATOR CO THIS DRAWING IS NOT TO BE COPIED OR USED WITHOUT THE APPROVAL OF MICRO SWITCH.

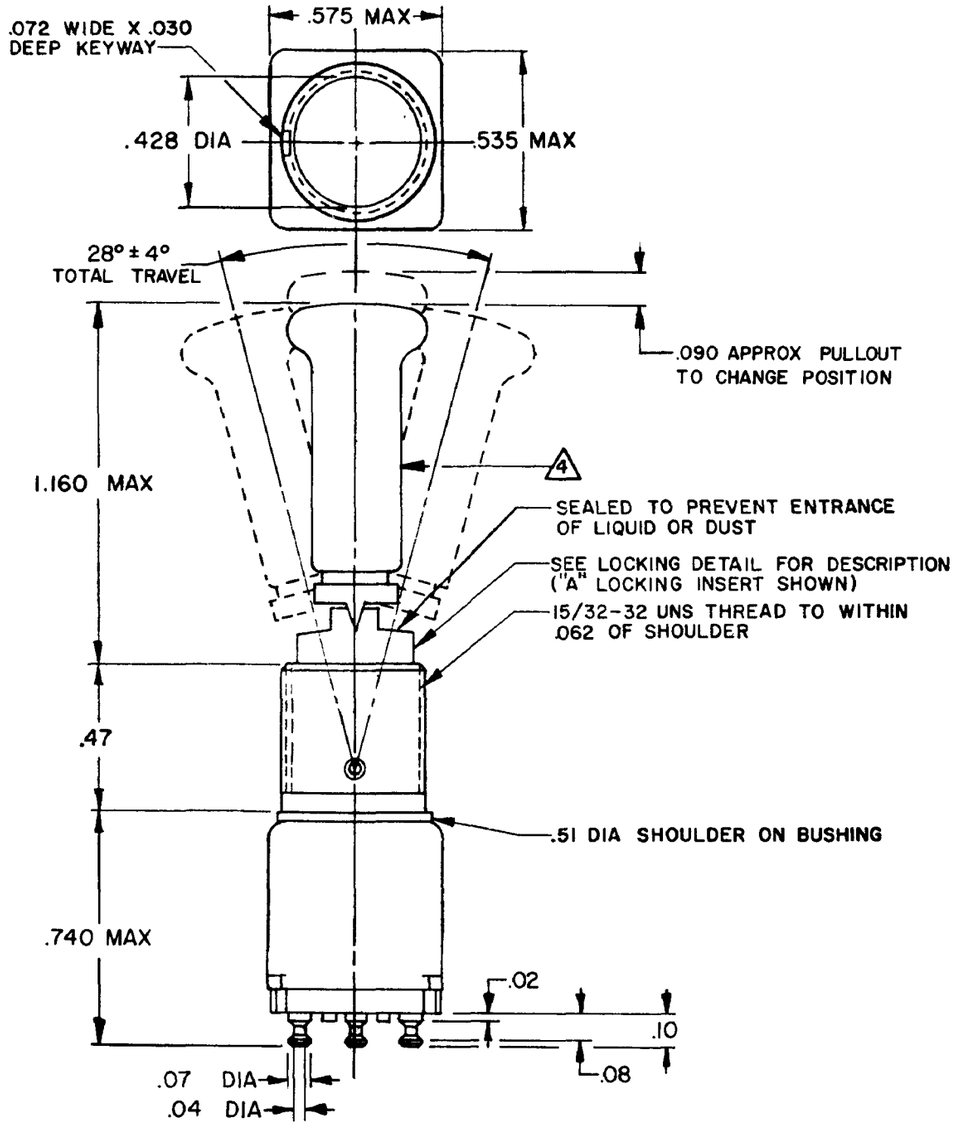

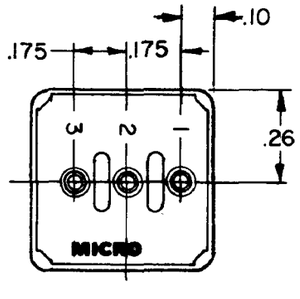

CAT. LIST. 3	RECOMMENDED LOCKING COMBINATIONS FOR CONFIGURATION SEE LETTERED DETAILS	CIRCUIT WITH TOGGLE IN: EXTREME POSITION KEYWAY SIDE (1-2)	CENTER	EXTREME POSITION OPPOSITE KEYWAY (2-3)
11TW8-1	A,B,D,E,F,G,H,J,K,L,M,N,P	ON	OFF	ON
11TW8-3	D, F, G	ON	NONE	ON
11TW8-5	E, F, K, L, M, N	MOM ON	OFF	ON
11TW8-7	E, L, N	MOM ON	OFF	MOM ON
11TW8-8	F	MOM ON	NONE	ON

ELECTRICAL DATA

CODE L117 5A-125 VAC

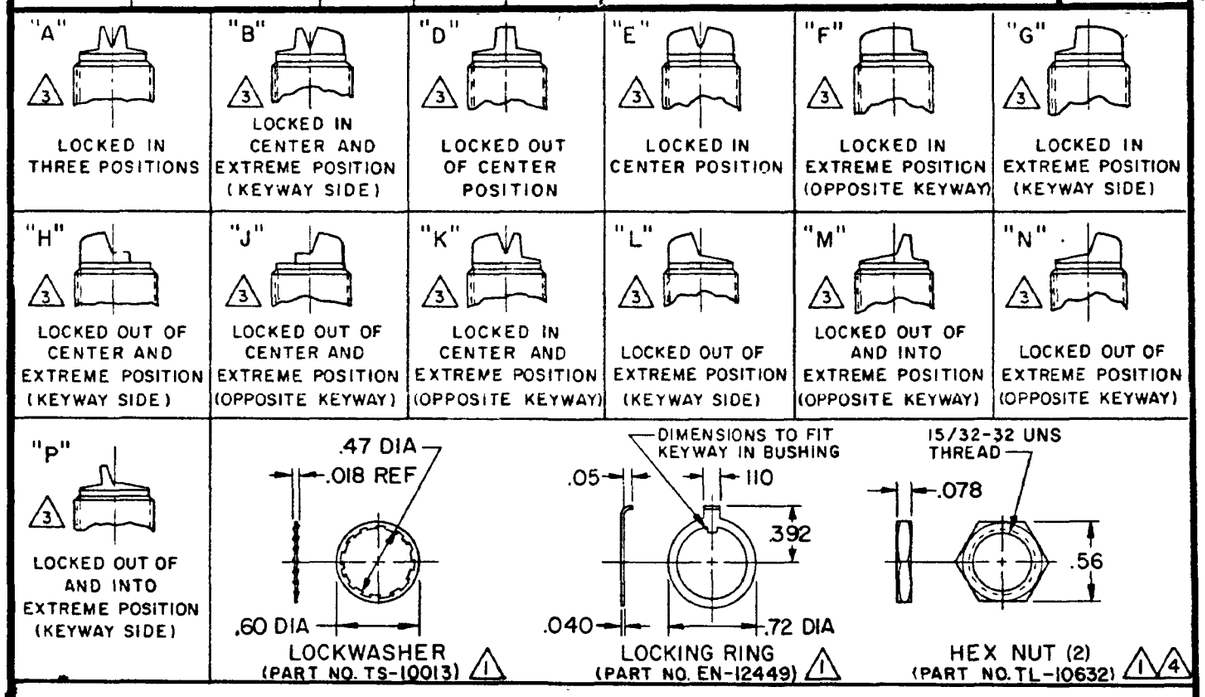

NOTE-
1. FURNISHED UNASSEMBLED
2. TERMINALS ARE PLATED FOR SOLDERING
3. SUFFIX MUST BE ADDED FOR DESIRED TYPE TOGGLE LOCKING
4. MATTE FINISH
5. GOLD PLATED CONTACTS

SCALE 2:1
DO NOT SCALE PRINT
UNLESS OTHERWISE SPECIFIED
DIMENSIONS ARE IN INCHES
TOLERANCES ARE:

ONE PLACE	(.0)	±.030
TWO PLACE	(.00)	±.015
THREE PLACE	(.000)	±.005
ANGLES		±

WEIGHT .045 LB MAX

FORMTEK

11TW8 SERIES CHART 2
REPLACES
RELEASE NO. PR-6519
DRAWING NUMBER M
ISSUE 6
CHECK

REVISIONS		
A	PR-6519	RER 18 MAY 77
B	C050565	TRF 12 DEC 81
C	C061252	JAP 12 MAR 87
D	C062939	TSK 24 FEB 88
E	C083309	GJW 17 JAN 97

DRAWN GLH 7 JUN 74