MICRO SWITCH
a Honeywell Division
FED.MFG.CODE 91929

ACTUATOR–SWITCH

CATALOG LISTING
JS–254

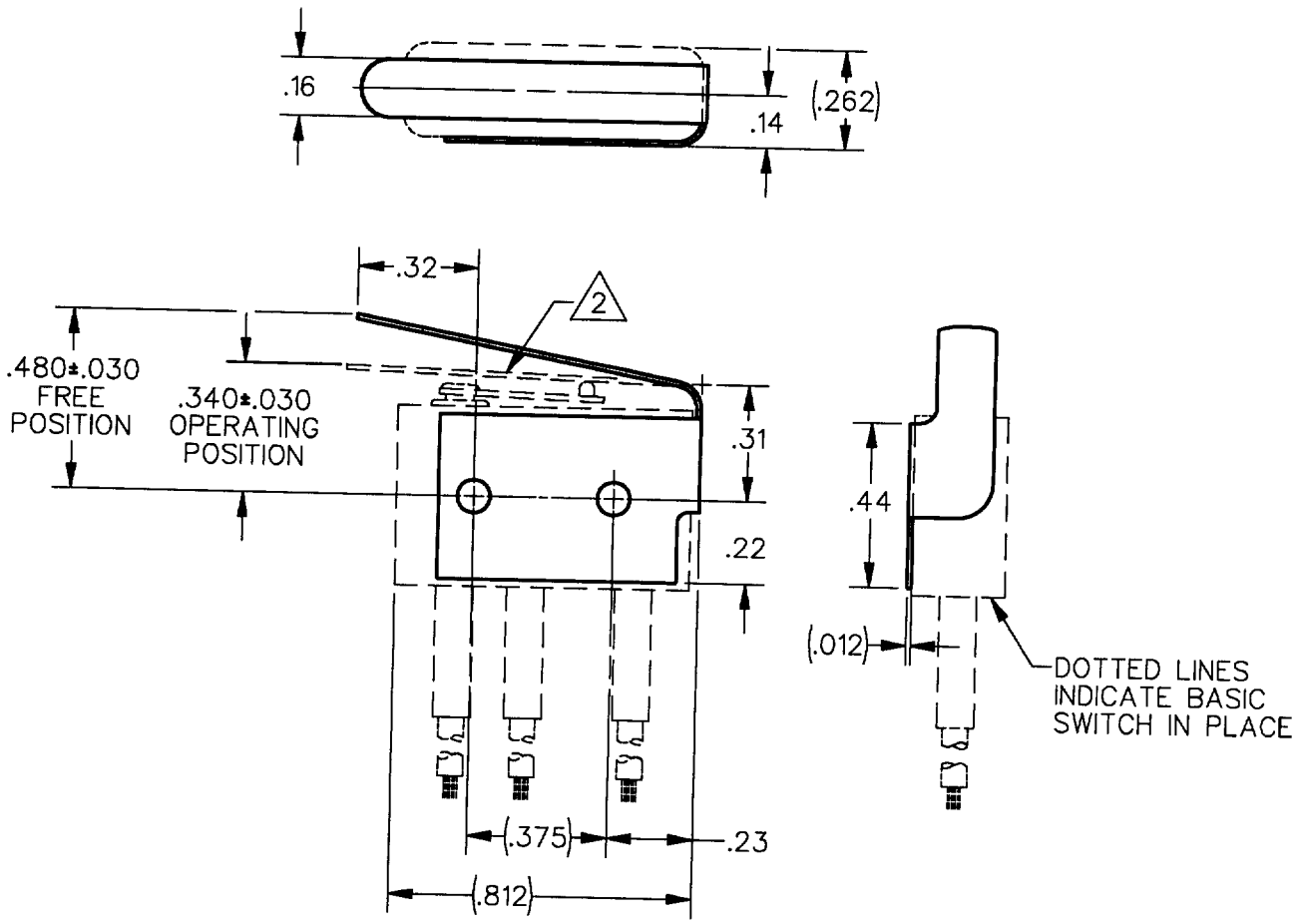

NOTES

1. CHARACTERISTICS WITH 6HM1–1 BASIC SWITCH INSTALLED ACTUATED .06 FROM END OF LEVER
2. ADJUSTMENT CAUTION: DO NOT ALLOW ACTUATOR LEAF TO COME IN CONTACT WITH HM LEVER TO PREVENT SWITCH SEAL DAMAGE

ANSI Y14.5M–1982 APPLIES

THIS DRAWING COVERS A PROPRIETARY ITEM AND IS THE PROPERTY OF MICRO SWITCH, A DIVISION OF HONEYWELL. THIS DRAWING IS NOT TO BE COPIED OR USED WITHOUT THE APPROVAL OF MICRO SWITCH.

THIRD ANGLE PROJECTION

CHARACTERISTICS 1	ELECTRICAL DATA
OPERATING FORCE — — — — 9 OZ MAX	CONTACT ARRANGEMENT
RELEASE FORCE — — — — — 2 OZ MIN	
DIFFERENTIAL TRAVEL — — — .030 MAX	
OVERTRAVEL — — — — — — .030 MIN	

SCALE FULL — DO NOT SCALE PRINT

UNLESS OTHERWISE SPECIFIED TOLERANCES ARE

ONE PLACE	(.0)	±.030
TWO PLACE	(.00)	±.015
THREE PLACE	(.000)	±.005
ANGLES		±

WEIGHT

JS–254 — RELEASE NO. PR–19880 — REPLACES — DRAWING NUMBER — ISSUE 2

REVISIONS
A PR–19880 TSM 4 MAY 92

DDM/CAD — DRAWN TSM 4 MAY 92 — CHECK MAM 4 MAY 92 — CHECK 4 MAY 92 — CHECK