MICRO SWITCH
FREEPORT ILLINOIS U.S.A.
A DIVISION OF HONEYWELL
FED MFG CODE 91929

SWITCH–TOGGLE

CATALOG LISTING
11TW1 SERIES
CHART 1 ★

MILITARY PART NUMBER	CATALOG LISTING	CIRCUIT MADE WITH TOGGLE LEVER IN: KEYWAY SIDE (1-2)	CENTER (1-2)	OPPOSITE KEYWAY (2-3)	ELECTRICAL DATA
MS 27718-21-1	11TW1-1	ON	OFF	ON	CODE L117 5A-125 VAC
MS 27718-22-1	11TW1-2	OFF	NONE	ON	
MS 27718-23-1	11TW1-3	ON	NONE	ON	
	11TW1-21	NONE	OFF	ON	
	11TW1-31	NONE	ON	ON	
	11TW1-4	MOM OFF	NONE	ON	CODE L117 5A-125 VAC
MS 27718-31-1	11TW1-5	MOM ON	OFF	ON	
	11TW1-6	MOM ON	NONE	OFF	
MS 27718-27-1	11TW1-7	MOM ON	OFF	MOM ON	
MS 27718-26-1	11TW1-8	MOM ON	NONE	ON	
	11TW1-41	NONE	MOM OFF	ON	
	11TW1-51	NONE	ON	MOM ON	
	11TW1-61	MOM ON	OFF	NONE	

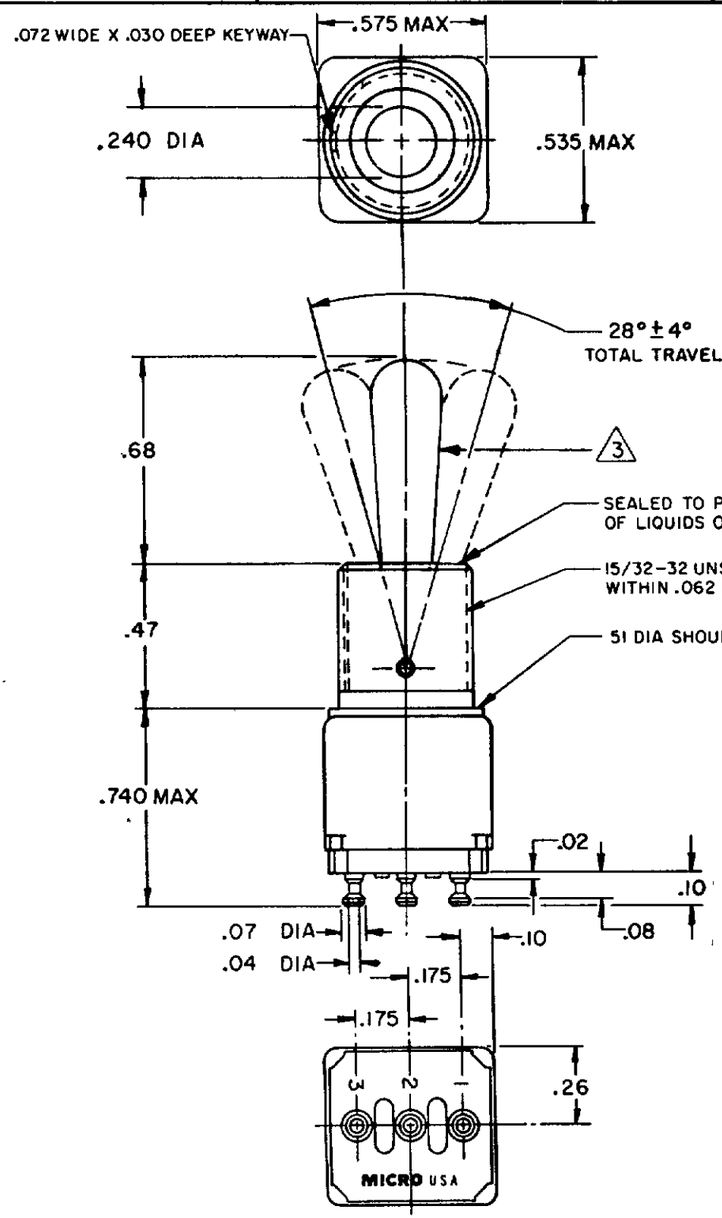

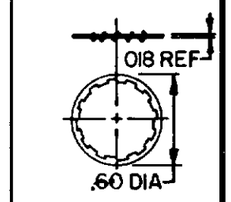

LOCKWASHER

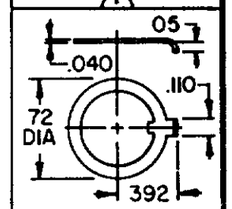

LOCKING RING

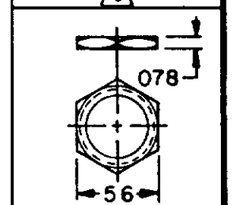

HEX NUT (2)

NOTES
1 - FURNISHED UNASSEMBLED
2 - TERMINALS ARE PLATED FOR SOLDERING
3 - MATTE FINISH

SCALE 2:1
DO NOT SCALE PRINT
UNLESS OTHERWISE NOTED
DIMENSIONS ARE IN INCHES
TOLERANCES ARE
ONE PLACE (.0) ±.030
TWO PLACE (.00) .015
THREE PLACE (.000) .005
ANGLES ±1°
WEIGHT .025 LB MAX

DRAWN S J B 14 MAR 79
CHECK CEB 16 MAR 79
CHECK
CHECK
RELEASE NO SR-13102
REPLACES
DRAWING NUMBER M 11TW1 SERIES CHART 1 ★
ISSUE 16 19 21

REVISIONS
A C045678 S J B 14 MAR 79
B C050665 T R F 12 DEC 81
C C056672 JAS 1 FEB 85
D C058138 KEW 27 SEP 85
E C061252 JAP 12 MAR 87
F C062939 TSK 24 FEB 88
G C089953A TSM 14 MAY 91

FO-52851