	COUNT	DESCRIPTION OF REVISIONS	BY	CHKD	DATE		COUNT	DESCRIPTION OF REVISIONS	BY	CHKD	DATE
1	1	DIS-C-000585	T.K	E.K	07.07.27						. .
					. .						. .
					. .						. .

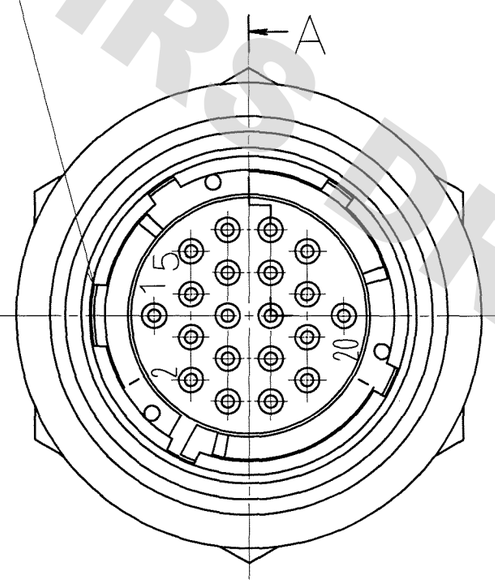

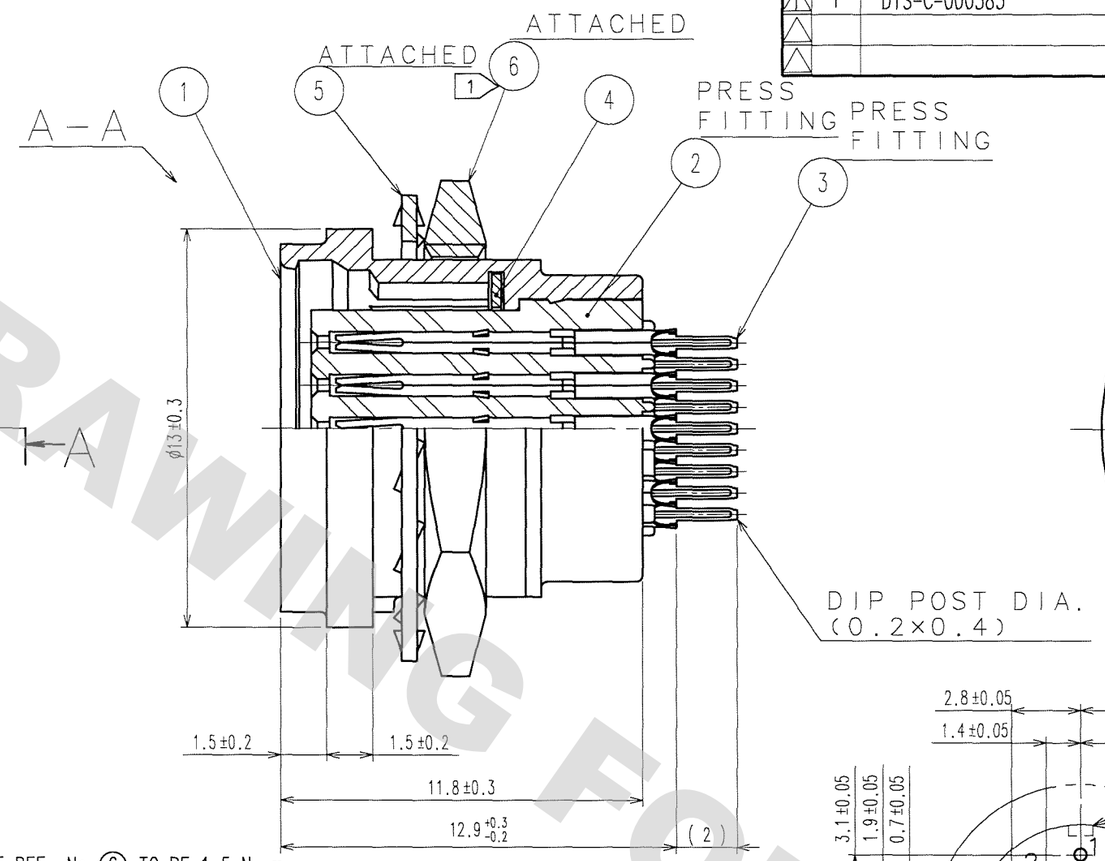

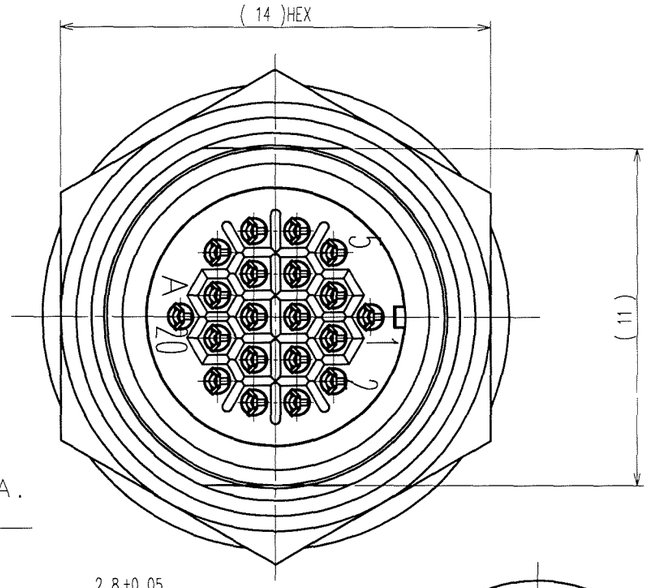

NOTES 1 THE RECOMMENDED TIGHTENING TORQUE OF REF. No.6 TO BE 1.5 N·m.
COATING WITH LOCTITE 242 MANUFACTURED BY HENKEL JAPAN OR EQUIVALENT
IS RECOMMENDED TO PREVENT LOOSENESS.

2 CONTACT AREA : GOLD 0.2μm min.
TERMINAL AREA: GOLD FLASH.
UNDER PLATING: NICKEL 2μm min.

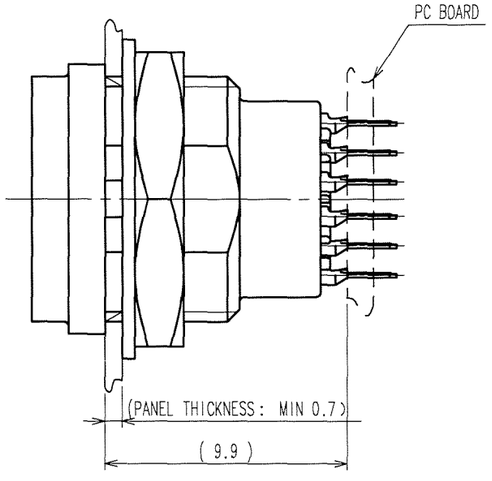

PANEL MOUNTED CONDITION(4 : 1)

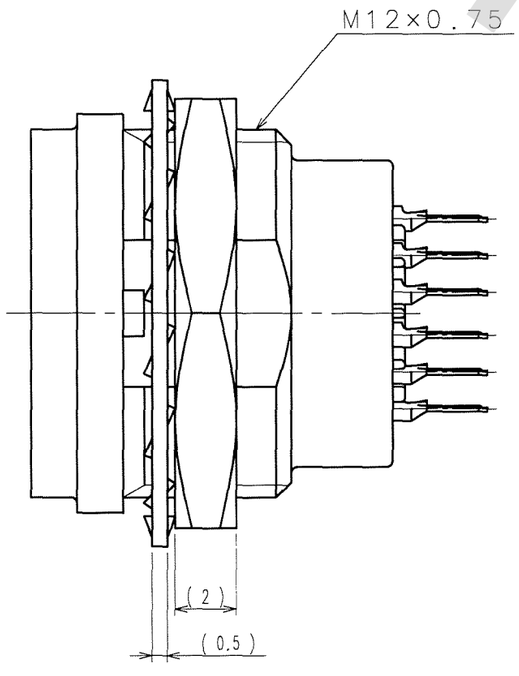

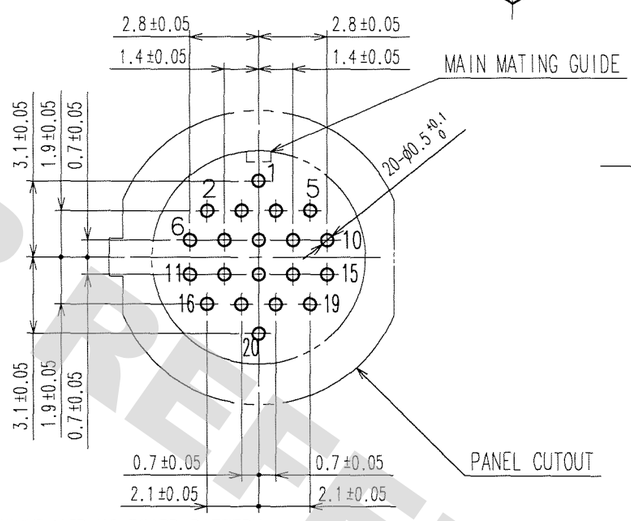

RECOMMENDED PC BOARD PATTERN
FROM MATING SIDE(4:1)

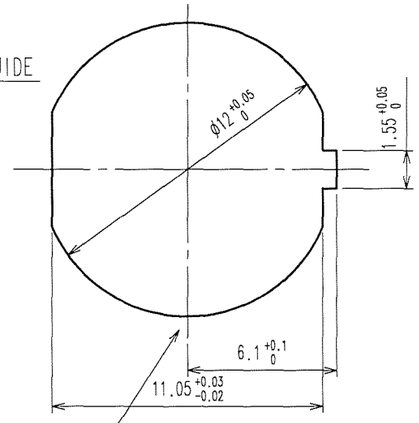

PANEL CUTOUT
FROM MATING FACE(4:1)
PANEL THICKNESS: 0.7 TO 2

NO.	MATERIAL	FINISH, REMARKS	NO.	MATERIAL	FINISH, REMARKS
3	PHOSPHOR BRONZE	2	6	BRASS 1	NICKEL PLATING
2	POLYPHENYLENE SULFIDE	(BLACK) UL94V-0	5	STEEL	ZINC CHROMATIZED(Cr3)
1	ZINC ALLOY	MATTE FINISH NICKEL PLATING	4	BERYLLIUM COPPER	NICKEL PLATING

CODE NO.(OLD)	DRAWN	DESIGNED	CHECKED	APPROVED	RELEASED
	M.SATO '06 09 26	Y.YAMADA '06 09 27	. .	M.SATO '06 09 27	. .

SCALE 5 : 1
UNITS mm

DRAWING NO. EDC3-115078

PART NO. HR25A-9R-20SA

HRS HIROSE ELECTRIC CO., LTD

CODE NO. CL125-0636-0-00

1/1

TO
R

DRAWING FOR REFERENCE: This is subject to change without notice
08/11/2012

HRS DRAWING FOR REFERENCE